9–15–97
Vol. 62 No. 178
Pages 48165–48448

federal register

Monday
September 15, 1997

Briefings on how to use the Federal Register
For information on briefings in Boston, MA, see the announcement on the inside cover of this issue.

Now Available Online

Code of Federal Regulations

via

GPO Access

(Selected Volumes)

Free, easy, online access to selected *Code of Federal Regulations (CFR)* volumes is now available via *GPO Access*, a service of the United States Government Printing Office (GPO). *CFR* titles will be added to *GPO Access* incrementally throughout calendar years 1996 and 1997 until a complete set is available. GPO is taking steps so that the online and printed versions of the *CFR* will be released concurrently.

The *CFR* and *Federal Register* on *GPO Access*, are the official online editions authorized by the Administrative Committee of the Federal Register.

New titles and/or volumes will be added to this online service as they become available.

http://www.access.gpo.gov/nara/cfr

For additional information on ***GPO Access*** products, services and access methods, see page II or contact the *GPO Access* User Support Team via:

★ Phone: toll-free: 1-888-293-6498

★ Email: gpoaccess@gpo.gov

FEDERAL REGISTER Published daily, Monday through Friday, (not published on Saturdays, Sundays, or on official holidays), by the Office of the Federal Register, National Archives and Records Administration, Washington, DC 20408, under the Federal Register Act (49 Stat. 500, as amended; 44 U.S.C. Ch. 15) and the regulations of the Administrative Committee of the Federal Register (1 CFR Ch. I). Distribution is made only by the Superintendent of Documents, U.S. Government Printing Office, Washington, DC 20402.

The Federal Register provides a uniform system for making available to the public regulations and legal notices issued by Federal agencies. These include Presidential proclamations and Executive Orders and Federal agency documents having general applicability and legal effect, documents required to be published by act of Congress and other Federal agency documents of public interest. Documents are on file for public inspection in the Office of the Federal Register the day before they are published, unless earlier filing is requested by the issuing agency.

The seal of the National Archives and Records Administration authenticates this issue of the Federal Register as the official serial publication established under the Federal Register Act. 44 U.S.C. 1507 provides that the contents of the **Federal Register** shall be judicially noticed.

The Federal Register is published in paper, 24x microfiche and as an online database through *GPO Access*, a service of the U.S. Government Printing Office. The online edition of the **Federal Register** on *GPO Access* is issued under the authority of the Administrative Committee of the Federal Register as the official legal equivalent of the paper and microfiche editions. The online database is updated by 6 a.m. each day the **Federal Register** is published. The database includes both text and graphics from Volume 59, Number 1 (January 2, 1994) forward. Free public access is available on a Wide Area Information Server (WAIS) through the Internet and via asynchronous dial-in. Internet users can access the database by using the World Wide Web; the Superintendent of Documents home page address is http://www.access.gpo.gov/su__docs/, by using local WAIS client software, or by telnet to swais.access.gpo.gov, then login as guest, (no password required). Dial-in users should use communications software and modem to call (202) 512–1661; type swais, then login as guest (no password required). For general information about *GPO Access*, contact the *GPO Access* User Support Team by sending Internet e-mail to gpoaccess@gpo.gov; by faxing to (202) 512–1262; or by calling toll free 1–888–293–6498 or (202) 512–1530 between 7 a.m. and 5 p.m. Eastern time, Monday–Friday, except for Federal holidays.

The annual subscription price for the **Federal Register** paper edition is $555, or $607 for a combined **Federal Register**, Federal Register Index and List of CFR Sections Affected (LSA) subscription; the microfiche edition of the **Federal Register** including the Federal Register Index and LSA is $220. Six month subscriptions are available for one-half the annual rate. The charge for individual copies in paper form is $8.00 for each issue, or $8.00 for each group of pages as actually bound; or $1.50 for each issue in microfiche form. All prices include regular domestic postage and handling. International customers please add 25% for foreign handling. Remit check or money order, made payable to the Superintendent of Documents, or charge to your GPO Deposit Account, VISA or MasterCard. Mail to: New Orders, Superintendent of Documents, P.O. Box 371954, Pittsburgh, PA 15250–7954.

There are no restrictions on the republication of material appearing in the **Federal Register.**

How To Cite This Publication: Use the volume number and the page number. Example: 60 FR 12345.

SUBSCRIPTIONS AND COPIES

PUBLIC	
Subscriptions:	
Paper or fiche	**202–512–1800**
Assistance with public subscriptions	**512–1806**
General online information	**202–512–1530; 1–888–293–6498**
Single copies/back copies:	
Paper or fiche	**512–1800**
Assistance with public single copies	**512–1803**
FEDERAL AGENCIES	
Subscriptions:	
Paper or fiche	**523–5243**
Assistance with Federal agency subscriptions	**523–5243**

FEDERAL REGISTER WORKSHOP

THE FEDERAL REGISTER: WHAT IT IS AND HOW TO USE IT

FOR: Any person who uses the Federal Register and Code of Federal Regulations

WHO: Sponsored by the Office of the Federal Register.

WHAT: Free public briefings (approximately 3 hours) to present:

1. The regulatory process, with a focus on the Federal Register system and the public's role in the development of regulations.
2. The relationship between the Federal Register and Code of Federal Regulations.
3. The important elements of typical Federal Register documents.
4. An introduction to the finding aids of the FR/CFR system.

WHY: To provide the public with access to information necessary to research Federal agency regulations which directly affect them. There will be no discussion of specific agency regulations.

BOSTON, MA

WHEN: September 23, 1997 at 9:00 am.

WHERE: John F. Kennedy Library
Smith Hall
Columbia Point
Boston, MA 02125

RESERVATIONS: 1–800–688–9889 x0

Printed on recycled paper containing 100% post consumer waste

Contents

Federal Register

Vol. 62, No. 178

Monday, September 15, 1997

Agency for Toxic Substances and Disease Registry
NOTICES
Hazardous substances releases and facilities:
Public health assessments and effects—
Quarterly listing, 48290

Agriculture Department
See Animal and Plant Health Inspection Service
See Commodity Credit Corporation
See Food Safety and Inspection Service
See Natural Resources Conservation Service

Animal and Plant Health Inspection Service
RULES
Interstate transportation of animals and animal products (quarantine):
Tuberculosis in cattle and bison—
State and area classifications, 48165
NOTICES
Agency information collection activities:
Proposed collection; comment request, 48209–48210
Reporting and recordkeeping requirements, 48210

Army Department
NOTICES
Privacy Act:
Systems of records, 48259–48260

Centers for Disease Control and Prevention
NOTICES
Meetings:
Disease, Disability, and Injury Prevention and Control special emphasis panel, 48290–48291

Children and Families Administration
NOTICES
Agency information collection activities:
Submission for OMB review; comment request, 48291

Commerce Department
See Economic Development Administration
See International Trade Administration
See National Oceanic and Atmospheric Administration
See National Telecommunications and Information Administration
NOTICES
Agency information collection activities:
Submission for OMB review; comment request, 48212–48213
Senior Executive Service:
Performance Review Board; membership, 48213

Committee for the Implementation of Textile Agreements
NOTICES
Cotton, wool, and man-made textiles:
Macau, 48221–48222
Malaysia, 48222

Commodity Credit Corporation
NOTICES
Agency information collection activities:
Proposed collection; comment request, 48210–48211

Customs Service
NOTICES
Uruguay Round Agreements Act (URAA):
Foreign entities violating textile transshipment rules; list, 48340–48342

Defense Department
See Army Department
See Defense Logistics Agency
See Defense Special Weapons Agency
See Navy Department
RULES
Acquisition regulations:
Data universal numbering system numbers for contractor identification, 48181–48182
PROPOSED RULES
Acquisition regulations:
Central contractor registration, 48200–48205
Federally funded research and development centers; weighted guidelines exemption, 48205–48206
NOTICES
Arms sales notification; transmittal letter, etc., 48223–48258
Environmental statements; availability, etc.:
Responsibility for additional cleanup after transfer of real property; DOD policy, 48259
Grants and cooperative agreements; availability, etc.:
Institutions of higher education ineligible for federal Funds; list, 48259

Defense Logistics Agency
NOTICES
Privacy Act:
Systems of records, 48261–48262

Defense Special Weapons Agency
NOTICES
Privacy Act:
System of records, 48261

Economic Development Administration
NOTICES
Senior Executive Service:
Performance Review Board; membership, 48213

Energy Department
See Federal Energy Regulatory Commission
See Western Area Power Administration

Environmental Protection Agency
RULES
Air pollution; standards of performance for new stationary sources:
Medical waste incinerators, 48348–48391
Water programs:
Pollutants analysis test procedures; guidelines—
Method 1613 test procedures; use approved, 48394–48442
NOTICES
Meetings:
National Advisory Council for Environmental Policy and Technology, 48276–48277
Privacy Act:
Systems of records, 48277–48280

Executive Office of the President
See Presidential Documents

Federal Aviation Administration
PROPOSED RULES
Air traffic operating and flight rules, etc.:
Airport and aircraft operator security; meetings, 48190–48191
Airworthiness directives:
Dassault, 48187–48189
McDonnell Douglas, 48189–48190

Federal Communications Commission
NOTICES
Common carrier services:
Federal-State Joint Board on Universal Service—
Schools, libraries and rural health care providers, 48280–48281
Reporting and recordkeeping requirements, 48281
Television broadcasting:
Cable television systems—
Video programming; voluntary rating system; revised industry proposal; comment request, 48281–48286

Federal Deposit Insurance Corporation
NOTICES
Meetings; Sunshine Act, 48286

Federal Emergency Management Agency
PROPOSED RULES
Flood elevation determinations:
Florida et al., 48193–48200
NOTICES
Disaster and emergency areas:
Colorado, 48286
Minnesota, 48286–48287

Federal Energy Regulatory Commission
NOTICES
Agency information collection activities:
Proposed collection; comment request, 48265–48266
Applications, hearings, determinations, etc.:
Boston Edison Co., 48267
Crossroads Pipeline Co., 48267
Egan Hub Partners, L.P., 48267
Huntsville Utilities Gas System, City of Huntsville, AL, et al., 48267–48268
Jupiter Energy Corp., 48268
K N Interstate Gas Transmission Co., 48268–48269
Long Island Lighting Co., 48269
Mid Louisiana Gas Co., 48269
New England Power Pool, 48269–48270
New York State Electric & Gas Corp., 48270
Pacific Interstate Offshore Co., 48270
Panhandle Eastern Pipe Line Co., 48270
Tex-La Electric Cooperative of Texas, Inc., 48270
Transcontinental Gas Pipe Line Corp., 48271
Unicom Power Marketing, Inc., 48271
United Cities Gas Co., 48271–48272
Williams Natural Gas Co., 48272

Federal Maritime Commission
NOTICES
Agreements filed, etc., 48287
Privacy Act:
Systems of records, 48287–48289

Federal Reserve System
RULES
Collection of checks and other items from Federal Reserve banks and Fedwire funds transfers (Regulation J):
Single funds accounts, 48166–48174

Fish and Wildlife Service
PROPOSED RULES
Endangered and threatened species:
Recovery plans—
Grizzly bear, 48206–48207
NOTICES
Endangered and threatened species:
Recovery plans—
Western lily; correction, 48345

Food and Drug Administration
RULES
Biological products:
United States Pharmacopeia (1995 edition); membrane filtration test procedures reference update, 48174–48175
NOTICES
Agency information collection activities:
Submission for OMB review; comment request, 48291–48292

Food Safety and Inspection Service
NOTICES
Meetings:
Meat, poultry, and egg products recall policy, 48211

Foreign Assets Control Office
RULES
Sanctions; blocked persons, specially designated nationals, terrorists, and narcotics traffickers, and blocked vessels; list consolidation
Additional designations and removals, 48177–48178

Health and Human Services Department
See Agency for Toxic Substances and Disease Registry
See Centers for Disease Control and Prevention
See Children and Families Administration
See Food and Drug Administration
See Health Care Financing Administration
See Health Resources and Services Administration
See National Institutes of Health
NOTICES
Committees; establishment, renewal, termination, etc.:
Alternative Toxicological Methods Advisory Committee, 48290

Health Care Financing Administration
NOTICES
Medicaid:
Disproportionate share hospitals; aggregate payments limitations, 48292–48297

Health Resources and Services Administration
NOTICES
Agency information collection activities:
Proposed collection; comment request, 48297–48298

Immigration and Naturalization Service
PROPOSED RULES
Immigration:
Aliens—
Detention and release of criminal aliens and custody redeterminations, 48183–48187

NOTICES
Employment eligibility confirmation; pilot programs, 48309–48316

Interior Department
See Fish and Wildlife Service
See Land Management Bureau
See National Park Service

International Trade Administration
NOTICES
Antidumping:
Brass sheet and strip from—
Canada, 48213
Cut-to-length carbon steel plate from—
Belgium, 48213–48218
Ferrosilicon from—
Brazil, 48218
Freshwater crawfish tail meat from—
China, 48218–48219
Grants and cooperative agreements; availability, etc.:
American Business Centers in Russia and the New Independent States, 48219–48221

Justice Department
See Immigration and Naturalization Service
NOTICES
Agency information collection activities:
Proposed collection; comment request, 48306–48308
Personal Responsibility and Work Opportunity Reconciliation Act of 1996:
Community programs necessary for life or safety under welfare reform; specification, 48308–48309

Labor Department
See Occupational Safety and Health Administration

Land Management Bureau
NOTICES
Committees; establishment, renewal, termination, etc.:
Dakotas District Resource Advisory Council, 48299
Realty actions; sales, leases, etc.:
Nevada, 48299–48300
Recreation management restrictions, etc.:
White Mountains National Recreation Area, AK; special rules and associated recreation facilities, 48300–48301

National Communications System
NOTICES
Federal telecommunications recommendation 1070-1997 Detail Specification, 48317

National Credit Union Administration
NOTICES
Meetings; Sunshine Act, 48317

National Institutes of Health
NOTICES
Meetings:
Acupuncture; consensus development conference, 48298

National Oceanic and Atmospheric Administration
PROPOSED RULES
Fishery conservation and management:
Northeastern United States fisheries—
New England Fishery Management Council; meetings, 48207–48208

National Park Service
NOTICES
Agency information collection activities:
Proposed collection; comment request, 48301–48302
Environmental statements; availability, etc.:
Shenandoah National Park, VA, 48302
Meetings:
Keweenaw National Historical Park Advisory Commission, 48302
Sleeping Bear Dunes National Lakeshore Advisory Commission, 48302
Native American human remains and associated funerary objects:
Illinois State Museum, Springfield, IL; inventory completion, 48303–48304
Peabody Museum of Archaeology and Ethnology, MA; cultural items from Rhode Island, 48304–48305
Peabody Museum of Archaeology, MA; inventory; correction, 48345
Springfield Science Museum, Springfield, MA; repatriation; correction, 48345

National Telecommunications and Information Administration
NOTICES
Senior Executive Service:
Performance Review Board; membership, 48221

Natural Resources Conservation Service
NOTICES
Environmental statements; availability, etc.:
Middle Deep Red Run Creek Watershed, OK, 48211
Field office technical guides; changes:
Florida, 48211–48212

Navy Department
NOTICES
Environmental statements; availability, etc.:
Base realignment and closure—
Naval Training Center; San Diego, CA, 48261
Environmental statements; notice of intent:
Base realignment and closure—
Fleet and Industrial Supply Center, Richmond, CA, 48260
Inventions, Government-owned; availability for licensing, 48262–48265

Nuclear Regulatory Commission
RULES
Notices, instructions and reports to workers, etc.:
Notice to employees (NRC Form 3, August 1997); posting requirements, 48165–48166
NOTICES
Certificates of compliance:
United States Enrichment Corp.—
Paducah Gaseous Diffusion Plant, KY, 48320–48321
Portsmouth Gaseous Diffusion Plant, OH, 48318–48320
Meetings:
Reactor Safeguards Advisory Committee, 48321–48322
Meetings; Sunshine Act, 48322
Regulatory guides; issuance, availability, and withdrawal, 48322–48323
Applications, hearings, determinations, etc.:
Northern States Power Co., 48317–48318

Occupational Safety and Health Administration
RULES
Safety and health standards, etc.:
Methylene chloride; occupational exposure—
Start-up date extension, 48175–48176
NOTICES
Meetings:
Occupational Safety and Health National Advisory Committee, 48317

Panama Canal Commission
RULES
Shipping and navigation:
Vessel transit reservation system; transit schedule preference, transiting vessels order, and passenger steamers preference, 48178–48181

Peace Corps
NOTICES
Agency information collection activities:
Submission for OMB review; comment request, 48323

Pension Benefit Guaranty Corporation
RULES
Single employer plans:
Allocation of assets—
Interest assumptions for valuing benefits, 48176–48177
NOTICES
Multiemployer plans:
Interest rates and assumptions, 48323–48324

Postal Service
PROPOSED RULES
Domestic Mail Manual:
Periodicals mail; presort requirements, 48191–48193

Presidential Documents
EXECUTIVE ORDERS
American Heritage Rivers, Federal support of community efforts (EO 13061), 48445–48448

Public Health Service
See Agency for Toxic Substances and Disease Registry
See Centers for Disease Control and Prevention
See Food and Drug Administration
See Health Resources and Services Administration
See National Institutes of Health

Securities and Exchange Commission
NOTICES
Self-regulatory organizations; proposed rule changes:
Chicago Stock Exchange, Inc., 48329–48331
Depository Trust Co., 48331–48332
Philadelphia Stock Exchange, Inc., 48332–48333
Applications, hearings, determinations, etc.:
Equisure, Inc., 48324
LEVCO Series Trust, et al., 48324–48329

Surface Transportation Board
NOTICES
Railroad operation, acquisition, construction, etc.:
Union Pacific Railroad Co. et al., 48333, 48334
Railroad services abandonment:
CSX Transportation, Inc., 48334

Textile Agreements Implementation Committee
See Committee for the Implementation of Textile Agreements

Toxic Substances and Disease Registry Agency
See Agency for Toxic Substances and Disease Registry

Transportation Department
See Federal Aviation Administration
See Surface Transportation Board

Treasury Department
See Customs Service
See Foreign Assets Control Office
NOTICES
Agency information collection activities:
Submission for OMB review; comment request, 48334–48340

Veterans Affairs Department
NOTICES
Agency information collection activities:
Proposed collection; comment request, 48342
Meetings:
Prosthetics and Special-Disabilities Programs Advisory Committee, 48342–48343
Voluntary Service National Advisory Committee, 48343
Women Veterans Advisory Committee, 48343–48344

Western Area Power Administration
NOTICES
Power rate adjustments:
Pick-Sloan Missouri Basin, Eastern Division, 48272–48276

Separate Parts In This Issue

Part II
Environmental Protection Agency, 48348–48391

Part III
Environmental Protection Agency, 48394–48442

Part IV
The President, 48445–48448

Reader Aids
Additional information, including a list of telephone numbers, finding aids, reminders, and a list of Public Laws appears in the Reader Aids section at the end of this issue.

Electronic Bulletin Board
Free **Electronic Bulletin Board** service for Public Law numbers, **Federal Register** finding aids, and a list of documents on public inspection is available on 202–275–1538 or 275–0920.

Public Laws Electronic Notification Service
Free electronic mail notification of newly enacted Public Laws is now available. To subscribe, send E-mail to **PENS@GPO.GOV** with the message: *SUBSCRIBE PENS-L FIRSTNAME LASTNAME.*

CFR PARTS AFFECTED IN THIS ISSUE

A cumulative list of the parts affected this month can be found in the Reader Aids section at the end of this issue.

3 CFR
Executive Orders:
13061.....48445

8 CFR
Proposed Rules:
3.....48183
236.....48183

9 CFR
77.....48165

10 CFR
19.....48165

12 CFR
210.....48166

14 CFR
Proposed Rules:
39 (2 documents) 48187, 48189
107.....48190
108.....48190
139.....48190

21 CFR
610.....48174

29 CFR
1910.....48175
4044.....48176

31 CFR
Ch. V.....48177

35 CFR
104.....48178

39 CFR
Proposed Rules:
111.....48191

40 CFR
60.....48348
136.....48394

44 CFR
Proposed Rules:
67.....48193

48 CFR
204.....48181
253.....48181
Proposed Rules:
204.....48200
212.....48200
215.....48205
252.....48200

50 CFR
Proposed Rules:
17.....48206
648.....48207

Rules and Regulations

Federal Register
Vol. 62, No. 178
Monday, September 15, 1997

This section of the FEDERAL REGISTER contains regulatory documents having general applicability and legal effect, most of which are keyed to and codified in the Code of Federal Regulations, which is published under 50 titles pursuant to 44 U.S.C. 1510.

The Code of Federal Regulations is sold by the Superintendent of Documents. Prices of new books are listed in the first FEDERAL REGISTER issue of each week.

DEPARTMENT OF AGRICULTURE

Animal and Plant Health Inspection Service

9 CFR Part 77

[Docket No. 97–041–2]

Tuberculosis in Cattle and Bison; State Designation

AGENCY: Animal and Plant Health Inspection Service, USDA.

ACTION: Affirmation of interim rule as final rule.

SUMMARY: We are adopting as a final rule, without change, an interim rule that amended the tuberculosis regulations concerning the interstate movement of cattle and bison by raising the designation of Virginia from a modified accredited State to an accredited-free State. We have determined that Virginia meets the criteria for designation as an accredited-free State.

EFFECTIVE DATE: The interim rule was effective on June 27, 1997.

FOR FURTHER INFORMATION CONTACT: Dr. Mitchell A. Essey, Senior Staff Veterinarian, National Animal Health Programs, VS, APHIS, 4700 River Road Unit 36, Riverdale, MD 20737–1231, (301) 734–7727; or e-mail: messey@aphis.usda.gov.

SUPPLEMENTARY INFORMATION:

Background

In an interim rule effective and published in the **Federal Register** on June 27, 1997 (62 FR 34612–34613, Docket No. 97–041–1), we amended the tuberculosis regulations in 9 CFR part 77 by removing Virginia from the list of modified accredited States in § 77.1 and adding it to the list of accredited-free States in that section.

Comments on the interim rule were required to be received on or before August 26, 1997. We did not receive any comments. The facts presented in the interim rule still provide a basis for the rule.

This action also affirms the information contained in the interim rule concerning Executive Order 12866 and the Regulatory Flexibility Act, Executive Orders 12372 and 12988, and the Paperwork Reduction Act.

Further, for this action, the Office of Management and Budget has waived the review process required by Executive Order 12866.

List of Subjects in 9 CFR Part 77

Animal diseases, Bison, Cattle, Reporting and recordkeeping requirements, Transportation, Tuberculosis.

PART 77—TUBERCULOSIS

Accordingly, we are adopting as a final rule, without change, the interim rule that amended 9 CFR part 77 and that was published at 62 FR 34612–34613 on June 27, 1997.

Authority: 21 U.S.C. 111, 114, 114a, 115–117, 120, 121, 134b, and 134f; 7 CFR 2.22, 2.80, and 371.2(d).

Done in Washington, DC, this 9th day of September 1997.

Terry L. Medley,

Administrator, Animal and Plant Health Inspection Service.

[FR Doc. 97–24390 Filed 9–12–97; 8:45 am]

BILLING CODE 3410–34–P

NUCLEAR REGULATORY COMMISSION

10 CFR Part 19

RIN 3150–AF66

Employees; Minor Amendment

AGENCY: Nuclear Regulatory Commission.

ACTION: Final rule.

SUMMARY: The Nuclear Regulatory Commission (NRC) is amending its regulations to refer to the August 1997 NRC Form 3, ''Notice to Employees'' or the latest version of this form provided by the Commission. This action is necessary because the version referenced in the Code of Federal Regulations (CFR) has been updated. This action also eliminates the need to update the Commission's regulations every time the form is changed.

EFFECTIVE DATE: The final rule is effective on September 15, 1997.

FOR FURTHER INFORMATION CONTACT: Mark Haisfield, Office of Nuclear Regulatory Research, U.S. Nuclear Regulatory Commission, Washington, DC 20555–0001, telephone 301–415–6196, e-mail MFH@NRC.GOV.

SUPPLEMENTARY INFORMATION:

Background

The purpose of this amendment to 10 CFR Part 19 is to promulgate a change to incorporate a reference to the latest NRC Form 3. NRC regulations in § 19.11, ''Posting of notices to workers,'' specify that licensees post the January 1996 revision of NRC Form 3, ''Notice to Employees.'' A new version of the form was issued in August 1997 to inform industry workers that the responsibility for investigating discrimination complaints within the Department of Labor has been transferred from the Wage and Hour Division to the Occupational Health and Safety Administration. Additionally, NRC Form 3 has been revised to indicate that the Paducah Gaseous Diffusion Plant located in Kentucky is under the purview of Region III and to show a new NRC address for Region II. Because licensees and applicants are required to prominently post the current version of NRC Form 3, § 19.11 is being updated to specify the use of the August 1997 version of NRC Form 3. To eliminate the need to revise the CFR whenever NRC Form 3 is changed, § 19.11 is also being revised to specify the use of later versions of NRC Form 3 that supersede the August 1997 version within 30 days of receiving the revised NRC Form 3 from the Commission. The NRC will inform licensees of future changes to NRC Form 3 by an administrative letter and, in addition, the availability of any new versions will be noticed in the **Federal Register**.

Because this is an amendment dealing with agency organization, practice, and procedure, the notice and comment provisions of the Administrative Procedure Act do not apply pursuant to 5 U.S.C. 553(b)(A). The amendment is effective upon publication in the **Federal Register**. Good cause exists to dispense with the usual 30-day delay in the effective date because the

amendment is of a minor and administrative nature dealing with an update to the CFR to reference the latest version of NRC Form 3.

Compatibility of Agreement State Regulations

Under ''Policy Statement on Adequacy and Compatibility of Agreement States,'' approved by the Commission on June 30, 1997, § 19.11 is listed as compatibility category ''C.'' Under compatibility category C, the essential objectives should be adopted by the State to avoid conflicts, duplications or gaps with NRC regulations. The manner in which the essential objectives are addressed may be different than that used by the NRC.

Environmental Impact: Categorical Exclusion

The Commission has determined that this final rule is the type of action described in categorical exclusion 10 CFR 51.22(c)(1). Therefore, neither an environmental impact statement nor an environmental assessment has been prepared for this final rule.

Paperwork Reduction Act Statement

This final rule does not contain a new or amended information collection requirement subject to the Paper Reduction Act of 1995 (44 U.S.C. 3501 et seq.). Existing requirements were approved by the Office of Management and Budget, approval 3150–0044.

Public Protection Notification

The NRC may not conduct or sponsor, and a person is not required to respond to, a collection of information unless it displays a currently valid OMB control number.

Regulatory Analysis

A regulatory analysis has not been prepared for this final rule because this rule is considered minor and not a substantial amendment; it has no economic impact on NRC licensees or the public.

Small Business Regulatory Enforcement Fairness Act

In accordance with the Small Business Regulatory Enforcement Fairness Act of 1996, the NRC has determined that this action is not a major rule and has verified this determination with the Office of Information and Regulatory Affairs, Office of Management and Budget.

List of Subjects in 10 CFR Part 19

Criminal penalties, Environmental protection, Nuclear materials, Nuclear power plants and reactors, Occupational safety and health, Radiation protection, Reporting and recordkeeping requirements, Sex discrimination.

For the reasons set out in the preamble and under the authority of the Atomic Energy Act of 1954, as amended; the Energy Reorganization Act of 1974, as amended; and 5 U.S.C. 552 and 553; the NRC is adopting the following amendment to 10 CFR Part 19.

PART 19—NOTICES, INSTRUCTIONS AND REPORTS TO WORKERS: INSPECTION AND INVESTIGATIONS

1. The authority citation for Part 19 continues to read as follows:

Authority: Secs. 53, 63, 81, 103, 104, 161, 186, 68 Stat. 930, 933, 935, 936, 937, 948, 955, as amended, sec. 234, 83 Stat. 444, as amended, sec. 1701, 106 Stat. 2951, 2952, 2953 (42 U.S.C 2073, 2093, 2111, 2133, 2134, 2201, 2236, 2282 2297f); sec. 201, 88 Stat. 1242, as amended (42 U.S.C. 5841); Pub. L. 95–601, sec. 10, 92 Stat. 2951 (42 U.S.C. 5851).

2. In § 19.11, paragraphs (c)(1) and (c)(2) are revised to read as follows:

§ 19.11 Posting of notices to workers.

* * * * *

(c)(1) Each licensee and each applicant for a specific license shall prominently post NRC Form 3, ''Notice to Employees,'' dated August 1997. Later versions of NRC Form 3 that supersede the August 1997 version shall replace the previously posted version within 30 days of receiving the revised NRC Form 3 from the Commission.

(c)(2) Additional copies of NRC Form 3 may be obtained by writing to the Regional Administrator of the appropriate U.S. Nuclear Regulatory Commission Regional Office listed in Appendix D to Part 20 of this chapter or by calling the NRC Information and Records Management Branch at 301–415–7232.

* * * * *

Dated at Rockville, Maryland, this 28th day of August, 1997.

For the Nuclear Regulatory Commission.

L. Joseph Callan,

Executive Director for Operations.

[FR Doc. 97–24381 Filed 9–12–97; 8:45 am]

BILLING CODE 7590–01–P

FEDERAL RESERVE SYSTEM

12 CFR Part 210

[Regulation J; Docket No. R–0972]

Collection of Checks and Other Items by Federal Reserve Banks and Funds Transfers Through Fedwire

AGENCY: Board of Governors of the Federal Reserve System.

ACTION: Final rule.

SUMMARY: Effective January 2, 1998, the Reserve Banks will begin to implement a policy under which each depository institution may maintain only a single funds account with the Federal Reserve. A single account will establish a single debtor-creditor relationship between each institution and a Federal Reserve Bank and will make account management more efficient for banks with interstate branches. The Board is adopting amendments to subpart A of Regulation J to conform the Federal Reserve check collection rules to the single account structure.

EFFECTIVE DATE: January 2, 1998.

FOR FURTHER INFORMATION CONTACT: Oliver Ireland, Associate General Counsel, (202/452–3625), Stephanie Martin, Senior Attorney (202/452–3198), or Heatherun Allison, Attorney (202/452–3565), Legal Division. For the hearing impaired *only,* contact Diane Jenkins, Telecommunications Device for the Deaf (TDD) (202/452–3544), Board of Governors of the Federal Reserve System, 20th and C Streets, N.W., Washington, D.C. 20551.

SUPPLEMENTARY INFORMATION:

Overview

The Riegle-Neal Interstate Banking and Branching Efficiency Act of 1994 (Pub. L. 103–328) made significant changes to various banking laws to authorize and facilitate interstate banking. Consequently, the number of depository institutions that operate branches in more than one Federal Reserve District is expected to increase. On January 2, 1998, the Federal Reserve Banks will begin to implement a new account structure that will provide a single Federal Reserve account for each institution.[1] A primary objective of the single account structure is to establish a single debtor-creditor relationship

[1] A foreign bank's U.S. branches and agencies and an Edge or agreement corporation's offices will not be required to adopt a single account structure. The Board has proposed amendments to Regulation D to allow such institutions with offices in multiple Federal Reserve Districts to choose whether to adopt a single-account structure or retain multiple accounts as they do currently [62 FR 42708, August 8, 1997].

between each chartered entity and the Federal Reserve. A single debtor-creditor relationship is the most effective means for Reserve Banks to manage their affairs with a depository institution. A single account structure also may allow depository institutions to manage their overall position with the Reserve Banks more efficiently.

The Board is adopting amendments to subpart A of Regulation J, governing the collection of checks and other items by Federal Reserve Banks, to conform the Federal Reserve check collection rules to the single account structure. The Board does not believe it is necessary to amend subpart B of Regulation J, which governs funds transfers through Fedwire, to accommodate the single account structure. The Reserve Banks will, however, issue revised operating circulars governing collection of cash items, Fedwire funds transfers, and other Reserve Bank services to reflect the new account structure.

Under the Regulation J amendments, all of an institution's check collection and return transactions through the Federal Reserve Banks will be reflected in a single account held at that institution's ''Administrative Reserve Bank'' (or in a correspondent's account at a Reserve Bank). Recent amendments to Regulation D provide a means to determine the location of an institution's reserve account.[2] The final amendments to Regulation J provide that the account location for an institution that sends items to a Reserve Bank for collection (and the identity of its Administrative Reserve Bank) will be determined in accordance with the provisions of Regulation D, even if the institution is not otherwise subject to that regulation.

Under the amendments, an institution generally is permitted to send an item to any Reserve Bank for collection, but the item is deemed to have been sent first to that institution's Administrative Reserve Bank. The amendments designate the parties that are deemed to handle the item and the order in which they are deemed to have handled it. (Although the Administrative Reserve Bank is deemed to handle the check, it would not be considered to have ''received'' the check as that term is used in subpart A of Regulation J if the check is initially sent to another Reserve Bank.) The amendments require a paying bank to settle for an item with its Administrative Reserve Bank (regardless of whether the institution received the item from its Administrative Reserve Bank) and specify the time and manner in which the paying bank is to make settlement. The amendments also make changes in the rules governing the handling of and settlement for returned checks parallel to those proposed for cash items.

[2] Regulation D provides that a depository institution is considered to be located in the Federal Reserve District specified in the institution's charter or organizing certificate, or, if no such location is specified, the location of its head office. If that location, in the Board's judgment, is ambiguous, would impede the ability of the Board or the Federal Reserve Banks to perform their functions under the Federal Reserve Act, or would impede the ability of the institution to operate efficiently, the Board could make exceptions to the general rule for a particular institution after considering certain criteria. [62 FR 34613, June 27, 1997].

Section-by-Section Analysis and Summary of Public Comments

The Board received nine comments on the proposed amendments to Regulation J from two bank holding companies, two trade associations, two clearing houses, two Federal Reserve Banks, and a financial services company. Overall, the commenters supported the changes and agreed that the single-account structure as implemented by the Regulation J proposal would promote operational efficiency, speed the collection of checks, and facilitate account management.

Section 210.2 Definitions

The Board proposed to add two new definitions to Regulation J. Under the new account structure, all of an institution's transactions will be reflected in a single account held at the institution's Administrative Reserve Bank. The Board proposed to add a definition of ''account'' to mean an account with reserve or clearing balances held on the books of a Federal Reserve Bank. The proposed definition stated that a subaccount is an informational record of a subset of transactions that affect an account and is not a separate account. (If a depository institution desires, the Reserve Banks will keep records of certain transactions in ''subaccounts,'' such as the transactions performed by a branch of a bank that may be in another District from the Administrative Reserve Bank.) The Board proposed to define ''Administrative Reserve Bank'' as the Reserve Bank in whose District the entity in question is located, as determined in the same way as location is determined for purposes of reserve accounts under the Board's Regulation D. The Board also proposed to amend the definition of ''bank'' to conform to the Uniform Commercial Code (U.C.C.) sections 4–105 and 4–107). Finally, the Board proposed to amend the definition of ''cash item'' to provide that, under the new single-account system, the Reserve Bank that initially receives an item for deposit, rather than the Reserve Bank in whose District the item is payable, is the Reserve Bank that decides whether to accept the item as a cash item.

The Board received one comment on the definition of ''account,'' specifically, on the discussion of a subaccount. The commenter noted that, due to recent bank mergers and for other reasons, certain banks may have several routing numbers within the same District for a period of time. The commenter suggested that the Board clarify that subaccounts could be established based on a bank's routing numbers presently in use. The Board anticipates that banks will be able to establish subaccounts based on routing numbers in use immediately prior to a merger. The Board also believes that a broad definition of subaccount is desirable to encompass transaction subsets based on routing numbers or on other criteria and has adopted the definition as proposed.

The Board received one comment on the proposed definition of ''Administrative Reserve Bank.'' The commenter stated that a depository institution should have more flexibility in choosing where its account will be located, that is, the depository institution should be allowed to hold its account at any Reserve Bank in whose District it operates, which may not be the Reserve Bank where the institution is located under Regulation D. The commenter argued that the proposed definition unnecessarily tied priced service offerings and account relationship issues to regulatory oversight issues. The theory behind the single-account structure, however, is that each depository institution will have a debtor-creditor relationship with a single Reserve Bank. Allowing an institution to choose to hold a clearing account for payment-related purposes at a Reserve Bank other than the Reserve Bank where its reserve account is located would result in debtor-creditor relationships with at least two Reserve Banks. If a depository institution wishes to have an account relationship with a Reserve Bank other than the Reserve Bank whose District encompasses its charter location, it may request a location determination under the procedure described in Regulation D. Moreover, the location of a depository institution's account for check collection and return purposes should not matter to the institution under the Regulation J amendments; the institution will be able to send checks to any Reserve Bank for collection with settlement through its Federal Reserve account regardless of the account's

location. The Board, therefore, has adopted the proposed definition of ''Administrative Reserve Bank,'' as well as the other proposed changes to § 210.2.

Section 210.3(a) General Provisions

This paragraph provides that the Reserve Banks may issue operating circulars governing the details of their check collection services and related matters. The Board proposed to specify that the operating circulars may allow an Administrative Reserve Bank to give instructions to other Reserve Banks, such as instructions regarding the handling of items that would affect an account on its books. The Board received no comments on this amendment and has adopted it as proposed.

Section 210.4 Sending Items to Reserve Banks

The Board proposed to amend this section to provide that a sender (other than a Reserve Bank sender) may send an item to any Reserve Bank for collection, regardless of where the sender or the paying bank is located, but that the sender's Administrative Reserve Bank may override this rule and require the sender to send the item to a particular Reserve Bank. The Board provided an example of a bank in financial difficulty, in which case the Administrative Reserve Bank may want to require the bank to deposit all of its items directly with a particular Reserve Bank in order to retain closer control over the bank's account.

Three commenters objected to the broad powers that this section gives to the Administrative Reserve Bank to require that checks be sent to a specific Reserve Bank. One commenter expressed concern that such an action could introduce inefficiencies into the payments system, increase return item risk, and provide the Administrative Reserve Bank with open-ended power over its private-sector competitors and customers. This commenter suggested that the Board remove the Administrative Reserve Bank's override power or, alternatively, clearly define the circumstances under which the Administrative Reserve Bank has this authority. The other commenters suggested that the Board limit the Administrative Reserve Bank's override authority to cases where the depositing institution is in financial difficulty or where the override is necessary to protect the safety and soundness of the payments system.

The Board believes this provision is necessary to address isolated emergency situations that may arise. The Board expects that an Administrative Reserve Bank would direct a bank to send checks to a specific Reserve Bank only under extreme and unusual circumstances. These circumstances might be caused by different situations, including a severe operational problem at a Reserve Bank. Consequently, the Board does not believe that it is feasible or appropriate to attempt to specify all such circumstances in advance. The Board, therefore, has adopted the provision as proposed.

The Board received no other specific comments on § 210.4. Three commenters generally supported giving depository institutions the flexibility to deposit checks with any Reserve Bank. The Board, therefore, has adopted the § 210.4 as proposed. The following discussion describes the amendments to this section in more detail:

Section 13(1) of the Federal Reserve Act (FRA)[3] authorizes a Reserve Bank to accept deposits of checks and other items from its member banks or from other depository institutions and to accept from other Reserve Banks checks and other items payable within its District. Under the Regulation J amendment, if a sender sends a check to a Reserve Bank other than its Administrative Reserve Bank or the Reserve Bank in whose District the check is payable, the receiving Reserve Bank is deemed to be acting as agent of the Administrative Reserve Bank. Regulation J requires, however, that such a receiving Reserve Bank take on additional rights, duties, and liabilities in its own name that it would not necessarily have as a common law agent of the Administrative Reserve Bank. For example, the receiving Reserve Bank is considered an indorser on the check and makes warranties on the check under § 210.6, Regulation CC, and the U.C.C. in its own name. The Board believes that requiring such a receiving Reserve Bank to take on these rights, duties, and liabilities is necessary to preserve a clear chain of warranties and other claims in the check collection and return system. Currently, in those limited situations where a Reserve Bank accepts deposits from institutions other than those located in its District, it does so under a special agency agreement with the institution's home Reserve Bank. Rather than perpetuating these special agreements, the new Regulation J amendments establish the terms under which the receiving Reserve Bank will handle items on behalf of an Administrative Reserve Bank.

Specifically, the amendments to § 210.4 designate the parties that are deemed to handle an item and the order in which they are deemed to have handled the item. These amendments establish the chain of indorsements on an item under Regulation J, Regulation CC, and the U.C.C., as well as the order in which the parties are agents or subagents of the owner of an item, as provided in § 210.6(a). As noted above, the rule provides that the sender is deemed to send the item to its Administrative Reserve Bank, regardless of whether that Reserve Bank actually receives the item first. The Administrative Reserve Bank is deemed to send the item to the Reserve Bank that actually receives the item from the sender (if different from the Administrative Reserve Bank). Any subsequent Reserve Bank that receives the item from another Reserve Bank is deemed to handle the item in turn.

If, for example, an Iowa branch of a Richmond bank, with an account at the Richmond Reserve Bank, sends a check to the Chicago Reserve Bank for collection, the check is deemed handled in the following order: the initial sender, the Richmond Reserve Bank (the Administrative Reserve Bank), and the Chicago Reserve Bank (the first Reserve Bank to receive the item). If the check in this example were drawn on a banking office in New York, the Chicago Reserve Bank would send the check to the Federal Reserve Bank of New York, in which case the New York Reserve Bank would be the last Reserve Bank to handle the check and would present the check to the paying bank. No other Reserve Bank would handle or would be deemed to handle the item. In the example, if the paying bank's Administrative Reserve Bank is the Federal Reserve Bank of Boston (which might be the case if the check is payable by a New York office of a bank headquartered in Boston), the Boston Reserve Bank is not a party to the check, even though settlement for the check will ultimately take place by a debit to an account on the Boston Reserve Bank's books. (See Table 1.)

Table 1.

This table illustrates the following example:

A Richmond-based bank has its account at the Federal Reserve Bank of Richmond (Richmond Fed), its Administrative Reserve Bank. An Iowa branch of the bank sends a check to the Federal Reserve Bank of Chicago (Chicago Fed) for collection. The check is payable by a New York office of a Boston-based bank, which has an account at the Federal Reserve Bank of Boston (Boston Fed). The Chicago Fed sends the check to the Federal Reserve Bank of New York (NY Fed), which presents the check to the New York office of the paying bank.

[3] 12 U.S.C. 360.

Path of Physical Check

Initial sender → Chicago Fed → NY Fed → Paying Bank

Parties Deemed To Have Handled the Check (Chain of Indorsements)

Initial sender → Richmond Fed → Chicago Fed → NY Fed → Paying Bank

Section 210.5 Sender's Agreement; Recovery by Reserve Bank

Paragraph (a) of § 210.5 sets forth the terms and warranties to which a sender agrees when it sends an item to a Reserve Bank. The Board proposed to amend this paragraph to conform with the provisions of § 210.4. Specifically, a sender would authorize its Administrative Reserve Bank, as well as any other Reserve Bank to which the item is sent, to handle an item and would authorize the Reserve Banks to make the appropriate accounting entries in settlement for the item. The Board proposed to make minor amendments to paragraph (c) (and parallel amendments to § 210.12(f)) to simplify the provisions describing how settlements occur between Reserve Banks. The Board also proposed to redesignate the paragraph numbers in paragraph (c). Paragraph (d) of § 210.5 requires a sender to grant a security interest in all its assets held by a Reserve Bank to secure any of its obligations related to items collected through the Reserve Banks. The Board proposed to amend this section to provide that the security interest is granted to the sender's Administrative Reserve Bank. The Board received no comments on the amendments to this section and has adopted them as proposed.

Section 210.6 Status, Warranties, and Liability of Reserve Bank

Paragraph (a) of this section provides that Reserve Banks act as agents or subagents of the owner of an item. The Board proposed to modify the reference to a Reserve Bank in the first sentence with the phrase ''that handles an item'' to clarify that this paragraph refers to the Reserve Banks that are identified in § 210.4. The current language provides that the agency terminates when a Reserve Bank receives final payment for the item and makes the proceeds available for use by the sender. The Board proposed to amend this provision by stating that the agency status will not end unless the time for commencing all actions against the Reserve Bank has expired. This amendment would ensure that the agency and subagency relationships between Reserve Banks regarding a particular item, as set forth in § 210.4, will continue until the statute of limitations has run on claims regarding any dispute concerning the item. The Board also proposed to reorganize the numbering in paragraphs (a) and (b) of this section.

The Board received one comment that specifically supported the amendments to this section. Another commenter asked why the agency status of a Reserve Bank should continue for an open-ended period of time. The commenter believed that the Reserve Bank's agency status should continue for the same period of time as the agency status of a private-sector collecting bank (until the settlement received for the item becomes final, as provided in U.C.C. section 4–201(a)), absent a compelling reason. The Board intended this provision to provide a theoretical basis for an Administrative Reserve Bank's right to instruct another Reserve Bank relating to risk, even after settlement is final. (Under Regulation CC, 12 CFR 229.36(d), settlements between banks are final when made.) For example, the Administrative Reserve Bank may wish to instruct another Reserve Bank about possible warranty claims and returns. The agency status is necessary for the Reserve Banks because they are separate corporations. Private-sector collecting banks can also extend the agency period by agreement. The Board has adopted § 210.6 as proposed.

Section 210.7 Presenting Items for Payment

This section provides rules regarding the presentment of items for payment. The Board proposed to make minor changes to paragraphs (c) and (d). Rather than referring to an item that is ''payable'' in a certain Federal Reserve District, the Board proposed to improve the precision of these provisions by referring to items that may be ''sent to the paying bank or nonbank payor'' in a certain Federal Reserve District. The Board received no comments on these amendments and has adopted them as proposed.

Section 210.8 Presenting Noncash Items for Acceptance

Similar to the changes to § 210.7, the Board proposed to replace the term ''payable elsewhere'' with the term ''may be presented elsewhere.'' The Board also proposed to reorganize the paragraph numbering in this section. The Board received no comments on these amendments and has adopted them as proposed.

Section 210.9 Settlement and Payment

This section sets forth the time and manner by which a paying bank must settle for items it receives from a Reserve Bank. The Board proposed to add a new paragraph (a) (and to redesignate the following paragraphs accordingly) to provide that a paying bank must settle for an item with its Administrative Reserve Bank, whether or not the paying bank *actually* receives the item from that Reserve Bank. By settling with its Administrative Reserve Bank, the paying bank would meet any settlement obligation it may have under Regulation CC and the U.C.C. For example, the U.C.C. (sections 4–301 and 4–302) requires a paying bank to settle with the presenting bank by midnight on the day of presentment if it wants to preserve its right to return the check by its midnight deadline on its next banking day. By settling with its Administrative Reserve Bank, a paying bank would satisfy this obligation to a presenting Reserve Bank.

The new paragraph (a) would also provide that a paying bank may settle through a correspondent account, with the agreement of its Administrative Reserve Bank, the Reserve Bank (if different) that holds the correspondent's account, and the correspondent. The paying bank would remain responsible for settlement if for some reason settlement does not occur through the correspondent account. The Board proposed to make a conforming change to paragraph (c) (as redesignated) related to payment for noncash items.

Currently, Regulation J requires the paying bank to settle so that funds are available to the presenting Reserve Bank by the close of Fedwire on the day of presentment. The Board proposed: (1) amendments to paragraph (b) (as redesignated) of § 210.9 to clarify that settlement funds must be made available to the paying bank's Administrative Reserve Bank, rather than the presenting Reserve Bank; (2) to change the references to a Reserve Bank's operating circular to include all of the Reserve Banks' operating circulars, as those circulars will be uniform as of January 1, 1998; (3) to clarify paragraph (b)(3) to refer to days the paying bank is closed voluntarily ''so that it does not receive a cash item'' (the provisions of this paragraph would not apply if the paying bank's head office were closed for business but a branch still received presentment of cash items from the Reserve Banks); (4) to replace references to ''one hour after the scheduled opening of Fedwire'' with ''9:30 a.m. Eastern Time'' so that this time will remain unchanged when the Fedwire opening hour is moved to 12:30 a.m. in December 1997; (5) to add paragraph headings throughout paragraph (b); and (6) to make conforming changes to cross-references

throughout § 210.9 in light of the paragraph redesignations. The Board received one comment that specifically supported the amendments to this section and has adopted the amendments as proposed.

Section 210.10 Time Schedule and Availability of Credits for Cash Items and Returned Checks

This paragraph provides that a Reserve Bank shall make proceeds available for cash items and returned checks according to its published time schedules. The Board proposed to clarify that the Reserve Bank that holds the settlement account will make credit available according to the time schedule of the Reserve Bank that first receives the cash item (or returned check) from the sender (or the paying or returning bank). The Board also proposed a conforming amendment to § 210.11(b) regarding credit for noncash items. The Board received no comments on these amendments and has adopted them as proposed.

Section 210.12 Return of Cash Items and Handling of Returned Checks

This section sets forth the rules governing handling of and settlement for returned checks. The rules for returned checks are generally parallel to the rules for cash items, and the Board proposed amendments that are parallel to the amendments for cash items discussed above. Under the proposal, a paying bank or returning bank may send a returned check to any Reserve Bank, unless its Administrative Reserve Bank directs it to send the returned check to a specific Reserve Bank. As with cash items, the paying or returning bank's Administrative Reserve Bank would be deemed to have handled the item first, prior to the Reserve Bank that actually received the item, for purposes of determining the relationships, rights, and liabilities of the parties (see discussion of § 210.4). Also similar to cash items, a paying or returning bank would authorize the handling of a returned check by its Administrative Reserve Bank, as well as by any other Reserve Bank to which a returned check is sent, and would authorize the Reserve Banks to make the appropriate accounting entries in settlement for the returned check (see discussion of § 210.5). A subsequent returning bank or depositary bank would be required to settle for a returned check with its Administrative Reserve Bank, whether or not the bank actually receives the returned check from that Reserve Bank. By settling with its Administrative Reserve Bank, the subsequent returning bank or depositary bank would meet its settlement obligations under Regulation CC and the U.C.C. (see discussion of § 210.9(a)). Finally, a paying or returning bank would grant a security interest in all its assets held by its Administrative Reserve Bank to secure any of its obligations related to returned checks it sends to a Reserve Bank (see discussion of § 210.5(d)). The Board received no comments on these amendments and has adopted them as proposed.

Transition Issues

One commenter expressed concern that the proposal may not make adequate provision for post-merger situations, when a depository institution may have a temporary transition account at a Reserve Bank other than its Administrative Reserve Bank. The commenter stated that, when some of an institution's checks will settle in a transition account, the Reserve Bank holding the transition account should have rights, privileges, and duties comparable to those of the Administrative Reserve Bank with respect to settlement, check warranties, control over direct-sends, instructions to other Reserve Banks with respect to items that affect the account on its books, and security interests in assets held at other Reserve Banks.

The Board believes that Regulation J as proposed adequately covers transition situations. For example, in the case of a bank merger, the surviving bank will have an account at its Administrative Reserve Bank while other offices may still have transition accounts at other Reserve Banks. Those transition accounts would operate similarly to correspondent settlement accounts. Checks that are deposited by the bank will be deemed to be handled first by the Administrative Reserve Bank and then by other Reserve Banks in the order set forth in § 210.4. The Reserve Bank that holds the transition account will not be considered a party to a check unless it actually handles the check and therefore should be considered more like a correspondent bank than an Administrative Reserve Bank. If the bank settles for checks presented by a Reserve Bank through a transition account, it will be deemed to have settled with its Administrative Reserve Bank for those checks under § 210.9(a).

Competitive Impact

One commenter stated that the Board should review the competitive equity issues that arise from the combination of the proposed Regulation J amendments and the Board's proposed enhanced net settlement service for depository institutions [62 FR 32118, June 12, 1997]. The commenter believed that private-sector clearing houses would be at a disadvantage vis-a-vis the Reserve Banks if the Reserve Banks are able to accommodate interstate banking starting on January 2, 1998, and the private-sector clearing houses are unable to avail themselves of the proposed net settlement services until late 1998. The commenter suggested that the Board analyze issues such as the risks that the Regulation J proposal is designed to address, the benefits that the proposal will provide to depository institutions, any cost savings that will accrue to Reserve Banks under the proposal, as well as other issues related to account monitoring and troubled banks. The commenter also asked that the Board consider allowing check clearing houses to have interim access to interdistrict net settlement services while the Board develops service enhancements.

The Regulation J proposal is driven by both operational and risk concerns. The structural changes in the banking business brought about by the increase in the number of banks with interstate branches have necessitated a new account structure in the Federal Reserve Banks to handle interstate banking. The Regulation J changes are necessary to set forth the rules that will govern Federal Reserve check collection under the new account structure. Depository institutions will benefit from the efficiencies of having to manage only a single Federal Reserve account and the ability to deposit checks for collection at any Reserve Bank.

In practical terms, the Regulation J proposal would likely have little immediate effect on current check collection patterns through the Reserve Banks. The proposal would allow branches of interstate banks to continue to deposits checks at the same Reserve Banks that they use today, irrespective of where their accounts are located. Eventually, these banks could benefit from price competition between Reserve Banks, which could result in volume shifts. Private-sector collecting banks could establish nationwide check collection or exchange systems as well. The Board does not believe that the Regulation J proposal, on its own, provides the Reserve Banks with any greater advantages in the check collection business than they already have today due to their nationwide presence and their ability to settle directly through Federal Reserve accounts.

For private-sector check clearing arrangements that wish to settle on a net basis on the books of a Reserve Bank, there are currently two net settlement services available, as set forth in the

notice for the proposed service enhancement. The traditional settlement-sheet-based service provides next-day finality, and the Fedwire-based service provides same-day finality. The Board proposed an enhanced settlement-sheet-based service that would provide same-day finality and establish more effective risk controls than exist under the current traditional service, which was designed to handle intradistrict clearing. In the interim, the Board recognizes that some clearing arrangements that receive traditional net settlement services from the Reserve Banks may have participants with an interstate presence. The Board will not require that such participants be excluded from such arrangements while the Board is developing the enhanced service.

Final Regulatory Flexibility Analysis

Two of the three requirements of a final regulatory flexibility analysis (5 U.S.C. 604), (1) a succinct statement of the need for and the objectives of the rule and (2) a summary of the issues raised by the public comments, the agency's assessment of the issues, and a statement of the changes made in the final rule in response to the comments, are discussed above. The third requirement of a final regulatory flexibility analysis is a description of significant alternatives to the rule that would minimize the rule's economic impact on small entities and reasons why the alternatives were rejected.

The rule will apply to all institutions, regardless of size, that send checks, returned checks, or other items to a Reserve Bank or receive items from a Reserve Bank. The rule sets out the terms under which the Reserve Banks handle items and does not impose significant burdens on small institutions, therefore no alternatives were considered for small institutions.

Paperwork Reduction Act

In accordance with the Paperwork Reduction Act of 1995 (44 U.S.C. 3506; 5 CFR 1320 Appendix A.1), the Board reviewed the rule under the authority delegated to the Board by the Office of Management and Budget. No collections of information pursuant to the Paperwork Reduction Act are contained in the rule.

List of Subjects in 12 CFR Part 210

Banks, banking, Federal Reserve System.

For the reasons set out in the preamble, the Board is amending part 210 of chapter II of title 12 of the Code of Federal Regulations as set forth below:

PART 210—COLLECTION OF CHECKS AND OTHER ITEMS BY FEDERAL RESERVE BANKS AND FUNDS TRANSFERS THROUGH FEDWIRE (REGULATION J)

1. The authority citation for part 210 continues to read as follows:

Authority: 12 U.S.C. 248(i), (j), and (o), 342, 360, 464, and 4001–4010.

2. Section 210.2 is amended by redesignating paragraph (a) and paragraphs (b) through (p) as paragraph (b) and paragraphs (d) through (r), respectively; adding new paragraphs (a) and (c); and revising newly redesignated paragraphs (d), (g) introductory text, and (g)(2) to read as follows:

§ 210.2 Definitions.

* * * * *

(a) *Account* means an account with reserve or clearing balances on the books of a Federal Reserve Bank. A subaccount is an informational record of a subset of transactions that affect an account and is not a separate account.

* * * * *

(c) *Administrative Reserve Bank* with respect to an entity means the Reserve Bank in whose District the entity is located, as determined under the procedure described in § 204.3(b)(2) of this chapter (Regulation D), even if the entity is not otherwise subject to that section.

(d) *Bank* means any person engaged in the business of banking. A branch or separate office of a bank is a separate bank to the extent provided in the Uniform Commercial Code.

* * * * *

(g) *Cash item* means —

* * * * *

(2) Any other item payable on demand and collectible at par that the Reserve Bank that receives the item is willing to accept as a cash item. *Cash item* does not include a returned check.

* * * * *

3. In § 210.3, the last sentence of paragraph (a) is revised to read as follows:

§ 210.3 General provisions.

(a) *General.* * * * The circulars may, among other things, classify cash items and noncash items, require separate sorts and letters, provide different closing times for the receipt of different classes or types of items, provide for instructions by an Administrative Reserve Bank to other Reserve Banks, set forth terms of services, and establish procedures for adjustments on a Reserve Bank's books, including amounts, waiver of expenses, and payment of interest by as-of adjustment.

* * * * *

4. Section 210.4 is revised to read as follows:

§ 210.4 Sending items to Reserve Banks.

(a) *Sending of items.* A sender, other than a Reserve Bank, may send any item to any Reserve Bank, whether or not the item is payable within the Reserve Bank's District, unless the sender's Administrative Reserve Bank directs the sender to send the item to a specific Reserve Bank.

(b) *Handling of items.* (1) The following parties, in the following order, are deemed to have handled an item that is sent to a Reserve Bank for collection—

(i) The initial sender

(ii) The initial sender's Administrative Reserve Bank

(iii) The Reserve Bank that receives the item from the initial sender (if different from the initial sender's Administrative Reserve Bank); and

(iv) Another Reserve Bank, if any, that receives the item from a Reserve Bank.

(2) A Reserve Bank that is not described in paragraph (b)(1) of this section is not a party that handles an item and is not a collecting bank with respect to an item.

(3) The identity and order of the parties under paragraph (b)(1) of this section determine the relationships and the rights and liabilities of the parties under this subpart, part 229 of this chapter (Regulation CC), and the Uniform Commercial Code. An initial sender's Administrative Reserve Bank that is deemed to handle an item is also deemed to be a sender with respect to that item. The Reserve Banks that are deemed to handle an item are deemed to be agents or subagents of the owner of the item, as provided in § 210.6(a) of this subpart.

(c) *Checks received at par.* The Reserve Banks shall receive cash items and other checks at par.

5. In § 210.5, paragraphs (a)(1) and (c) and the first sentence of paragraph (d) are revised to read as follows:

§ 210.5 Sender's agreement; recovery by Reserve Bank.

(a) * * *

(1) Authorizes the sender's Administrative Reserve Bank and any other Reserve Bank or collecting bank to which the item is sent to handle the item (and authorizes any Reserve Bank that handles settlement for the item to make accounting entries), subject to this subpart and to the Reserve Banks'

operating circulars, and warrants its authority to give this authorization;

* * * * *

(c) *Methods of recovery.* (1) The Reserve Bank may recover the amount stated in paragraph (b) of this section by charging any account on its books that is maintained or used by the sender (or by charging a Reserve Bank sender), if—

(i) The Reserve Bank made seasonable written demand on the sender to assume defense of the action or proceeding; and

(ii) The sender has not made any other arrangement for payment that is acceptable to the Reserve Bank.

(2) The Reserve Bank is not responsible for defending the action or proceeding before using this method of recovery. A Reserve Bank that has been charged under this paragraph (c) may recover from its sender in the manner and under the circumstances set forth in this paragraph (c). A Reserve Bank's failure to avail itself of the remedy provided in this paragraph (c) does not prejudice its enforcement in any other manner of the indemnity agreement referred to in paragraph (a)(3) of this section.

(d) *Security interest.* When a sender sends an item to a Reserve Bank, the sender and any prior collecting bank grant to the sender's Administrative Reserve Bank a security interest in all of their respective assets in the possession of, or held for the account of, any Reserve Bank to secure their respective obligations due or to become due to the Administrative Reserve Bank under this subpart or subpart C of part 229 of this chapter (Regulation CC). * * *

6. In § 210.6, paragraphs (a)(1) and (b) are revised to read as follows:

§ 210.6 Status, warranties, and liability of Reserve Bank.

(a)(1) *Status and liability.* A Reserve Bank that handles an item shall act as agent or subagent of the owner with respect to the item. This agency terminates when a Reserve Bank receives final payment for the item in actually and finally collected funds, a Reserve Bank makes the proceeds available for use by the sender, and the time for commencing all actions against the Reserve Bank has expired. A Reserve Bank shall not have or assume any liability with respect to an item or its proceeds except—

(i) For the Reserve Bank's own lack of good faith or failure to exercise ordinary care;

(ii) As provided in paragraph (b) of this section; and

(iii) As provided in subpart C of part 229 of this chapter (Regulation CC).

* * * * *

(b) *Warranties and liability.* (1) By presenting or sending an item, a Reserve Bank warrants to a subsequent collecting bank and to the paying bank and any other payor—

(i) That the Reserve Bank is a person entitled to enforce the item (or is authorized to obtain payment of the item on behalf of a person who is either entitled to enforce the item or authorized to obtain payment on behalf of a person entitled to enforce the item); and

(ii) That the item has not been altered.

(2) The Reserve Bank also makes the warranties set forth in § 229.34(c) of this chapter, subject to the terms of part 229 of this chapter (Regulation CC). The Reserve Bank shall not have or assume any other liability to the paying bank or other payor, except for the Reserve Bank's own lack of good faith or failure to exercise ordinary care.

* * * * *

7. In § 210.7, paragraph (c) introductory text and paragraph (d) are revised to read as follows:

§ 210.7 Presenting items for payment.

* * * * *

(c) *Presenting or sending direct.* A Reserve Bank or subsequent collecting bank may, with respect to an item that may be sent to the paying bank or nonbank payor in the Reserve Bank's District—

* * * * *

(d) *Item sent to another district.* A Reserve Bank receiving an item that may be sent to a paying bank or nonbank payor in another District ordinarily sends the item to the Reserve Bank of the other District, but with the agreement of the other Reserve Bank, may present or send the item as if it were sent to a paying bank or nonbank payor in its own District.

8. Section 210.8 is revised to read as follows:

§ 210.8 Presenting noncash items for acceptance.

(a) A Reserve Bank or a subsequent collecting bank may, if instructed by the sender, present a noncash item for acceptance in any manner authorized by law if—

(1) The item provides that it must be presented for acceptance;

(2) The item may be presented elsewhere than at the residence or place of business of the payor; or

(3) The date of payment of the item depends on presentment for acceptance.

(b) Documents accompanying a noncash item shall not be delivered to the payor upon acceptance of the item unless the sender specifically authorizes delivery. A Reserve Bank shall not have or assume any other obligation to present or to send for presentment for acceptance any noncash item.

9. Section 210.9 is amended by redesignating paragraphs (a) through (e) as paragraphs (b) through (f); adding a new paragraph (a); revising newly redesignated paragraphs (b) and (c); and in newly redesignated paragraph (f) removing the references ''paragraphs (a), (b), and (c)'' and adding in their place ''paragraphs (b), (c), and (d)'' to read as follows:

§ 210.9 Settlement and payment.

(a) *Settlement through Administrative Reserve Bank.* A paying bank shall settle for an item under this subpart with its Administrative Reserve Bank, whether or not the paying bank received the item from that Reserve Bank. A paying bank's settlement with its Administrative Reserve Bank is deemed to be settlement with the Reserve Bank from which the paying bank received the item. A paying bank may settle for an item using any account on a Reserve Bank's books by agreement with its Administrative Reserve Bank, any other Reserve Bank holding the settlement account, and the account-holder. The paying bank remains responsible for settlement if the Reserve Bank holding the settlement account does not, for any reason, obtain settlement in that account.

(b) *Cash items*—(1) *Settlement obligation.* On the day a paying bank receives[2] a cash item from a Reserve Bank, it shall settle for the item such that the proceeds of the settlement are available to its Administrative Reserve Bank by the close of Fedwire on that day, or it shall return the item by the later of the close of its banking day or the close of Fedwire. If the paying bank fails to settle for or return a cash item in accordance with this paragraph (b)(1), it is accountable for the amount of the item as of the close of its banking day or the close of Fedwire on the day it receives the item, whichever is earlier.

(2) *Time of settlement.* (i) On the day a paying bank receives a cash item from a Reserve Bank, it shall settle for the item so that the proceeds of the settlement are available to its Administrative Reserve Bank, or return the item, by the latest of—

(A) The next clock hour that is at least one hour after the paying bank receives the item;

(B) 9:30 a.m. Eastern Time; or

[2] A paying bank is deemed to receive a cash item on its next banking day if it receives the item—

(1) On a day other than a banking day for it; or

(2) On a banking day for it, but after a ''cut-off hour'' established by it in accordance with state law.

(C) Such later time as provided in the Reserve Banks' operating circulars.

(ii) If the paying bank fails to settle for or return a cash item in accordance with paragraph (b)(2)(i) of this section, it shall be subject to any applicable overdraft charges. Settlement under paragraph (b)(2)(i) of this section satisfies the settlement requirements of paragraph (b)(1) of this section.

(3) *Paying bank closes voluntarily.* (i) If a paying bank closes voluntarily so that it does not receive a cash item on a day that is a banking day for a Reserve Bank, and the Reserve Bank makes the cash item available to the paying bank on that day, the paying bank shall either—

(A) On that day, settle for the item so that the proceeds of the settlement are available to its Administrative Reserve Bank, or return the item, by the latest of the next clock hour that is at least one hour after it ordinarily would have received the item, 9:30 a.m. Eastern Time, or such later time as provided in the Reserve Banks' operating circulars; or

(B) On the next day that is a banking day for both the paying bank and the Reserve Bank, settle for the item so that the proceeds of the settlement are available to its Administrative Reserve Bank by 9:30 a.m. Eastern Time on that day or such later time as provided in the Reserve Banks' operating circulars and compensate the Reserve Bank for the value of the float associated with the item in accordance with procedures provided in the Reserve Bank's operating circular.

(ii) If a paying bank closes voluntarily so that it does not receive a cash item on a day that is a banking day for a Reserve Bank, and the Reserve Bank makes the cash item available to the paying bank on that day, the paying bank is not considered to have received the item until its next banking day, but it shall be subject to any applicable overdraft charges if it fails to settle for or return the item in accordance with paragraph (b)(3)(i) of this section. The settlement requirements of paragraphs (b)(1) and (b)(2) of this section do not apply to a paying bank that settles in accordance with paragraph (b)(3)(i) of this section.

(4) *Reserve Bank closed.* (i) If a paying bank receives a cash item from a Reserve Bank on a banking day that is not a banking day for the Reserve Bank, the paying bank shall—

(A) Settle for the item so that the proceeds of the settlement are available to its Administrative Reserve Bank by the close of Fedwire on the Reserve Bank's next banking day, or return the item by midnight of the day it receives the item (if the paying bank fails to settle for or return a cash item in accordance with this paragraph (b)(4)(i)(A), it shall become accountable for the amount of the item as of the close of its banking day on the day it receives the item); and

(B) Settle for the item so that the proceeds of the settlement are available to its Administrative Reserve Bank by 9:30 a.m. Eastern Time on the Reserve Bank's next banking day or such later time as provided in the Reserve Bank's operating circular, or return the item by midnight of the day it receives the item. If the paying bank fails to settle for or return a cash item in accordance with this paragraph (b)(4)(i)(B), it shall be subject to any applicable overdraft charges. Settlement under this paragraph (b)(4)(i)(B) satisfies the settlement requirements of paragraph (b)(4)(i)(A) of this section.

(ii) The settlement requirements of paragraphs (b)(1) and (b)(2) of this section do not apply to a paying bank that settles in accordance with paragraph (b)(4)(i) of this section.

(5) *Manner of settlement.* Settlement with a Reserve Bank under paragraphs (b) (1) through (4) of this section shall be made by debit to an account on the Reserve Bank's books, cash, or other form of settlement to which the Reserve Bank agrees, except that the Reserve Bank may, in its discretion, obtain settlement by charging the paying bank's account. A paying bank may not set off against the amount of a settlement under this section the amount of a claim with respect to another cash item, cash letter, or other claim under § 229.34(c) of this chapter (Regulation CC) or other law.

(6) *Notice in lieu of return.* If a cash item is unavailable for return, the paying bank may send a notice in lieu of return as provided in § 229.30(f) of this chapter (Regulation CC).

(c) *Noncash items.* A Reserve Bank may require the paying or collecting bank to which it has presented or sent a noncash item to pay for the item in cash, but the Reserve Bank may permit payment by a debit to an account maintained or used by the paying or collecting bank on a Reserve Bank's books or by any of the following that is in a form acceptable to the collecting Reserve Bank: bank draft, transfer of funds or bank credit, or any other form of payment authorized by State law.

* * * * *

10. Section 210.10 is revised to read as follows:

§ 210.10 Time schedule and availability of credits for cash items and returned checks.

(a) Each Reserve Bank shall include in its operating circulars a time schedule for each of its offices indicating when the amount of any cash item or returned check received by it is counted as reserves for purposes of part 204 of this chapter (Regulation D) and becomes available for use by the sender or paying or returning bank. The Reserve Bank that holds the settlement account shall give either immediate or deferred credit to a sender, a paying bank, or a returning bank (other than a foreign correspondent) in accordance with the time schedule of the receiving Reserve Bank. A Reserve Bank ordinarily gives credit to a foreign correspondent only when the Reserve Bank receives payment of the item in actually and finally collected funds, but, in its discretion, a Reserve Bank may give immediate or deferred credit in accordance with its time schedule.

(b) Notwithstanding its time schedule, a Reserve Bank may refuse at any time to permit the use of credit given by it for any cash item or returned check, and may defer availability after credit is received by the Reserve Bank for a period of time that is reasonable under the circumstances.

11. In § 210.11, the last sentence of paragraph (b) is revised to read as follows:

§ 210.11 Availability of proceeds of noncash items; time schedule.

* * * * *

(b) * * * A Reserve Bank may, however, refuse at any time to permit the use of credit given by it for a noncash item for which the Reserve Bank has not yet received payment in actually and finally collected funds.

* * * * *

12. Section 210.12 is amended by revising paragraphs (a), (b), and (c)(1), the first sentence of paragraph (d), paragraphs (f) and (h), and the first sentence of paragraph (i); and by removing the last sentence of paragraph (g) to read as follows:

§ 210.12 Return of cash items and handling of returned checks.

(a) *Return of items*—(1) *Return of cash items handled by Reserve Banks.* A paying bank that receives a cash item from a Reserve Bank, other than for immediate payment over the counter, and that settles for the item as provided in § 210.9(b) of this subpart, may, before it has finally paid the item, return the item to any Reserve Bank (unless its Administrative Reserve Bank directs it to return the item to a specific Reserve Bank) in accordance with subpart C of

part 229 of this chapter (Regulation CC), the Uniform Commercial Code, and the Reserve Banks' operating circulars. A paying bank that receives a cash item from a Reserve Bank also may return the item prior to settlement, in accordance with § 210.9(b) of this subpart and the Reserve Banks' operating circulars. The rules or practices of a clearinghouse through which the item was presented, or a special collection agreement under which the item was presented, may not extend these return times, but may provide for a shorter return time.

(2) *Return of checks not handled by Reserve Banks.* A paying bank that receives a check as defined in § 229.2(k) of this chapter (Regulation CC), other than from a Reserve Bank, and that determines not to pay the check, may send the returned check to any Reserve Bank (unless its Administrative Reserve Bank directs it to send the returned check to a specific Reserve Bank) in accordance with subpart C of part 229 of this chapter (Regulation CC), the Uniform Commercial Code, and the Reserve Banks' operating circulars. A returning bank may send a returned check to any Reserve Bank (unless its Administrative Reserve Bank directs it to send the returned check to a specific Reserve Bank) in accordance with subpart C of part 229 of this chapter (Regulation CC), the Uniform Commercial Code, and the Reserve Banks' operating circulars.

(b) *Handling of returned checks.* (1) The following parties, in the following order, are deemed to have handled a returned check sent to a Reserve Bank under paragraph (a) of this section——

(i) The paying or returning bank;

(ii) The paying bank's or returning bank's Administrative Reserve Bank;

(iii) The Reserve Bank that receives the returned check from the paying or returning bank (if different from the paying bank's or returning bank's Administrative Reserve Bank); and

(iv) Another Reserve Bank, if any, that receives the returned check from a Reserve Bank.

(2) A Reserve Bank that is not described in paragraph (b)(1) of this section is not a party that handles a returned check and is not a returning bank with respect to a returned check.

(3) The identity and order of the parties under paragraph (b)(1) of this section determine the relationships and the rights and liabilities of the parties under this subpart, part 229 of this chapter (Regulation CC), and the Uniform Commercial Code.

(c) *Paying bank's and returning bank's agreement.* * * *

(1) Authorizes the paying or returning bank's Administrative Reserve Bank, and any other Reserve Bank or returning bank to which the returned check is sent, to handle the returned check (and authorizes any Reserve Bank that handles settlement for the returned check to make accounting entries) subject to this subpart and to the Reserve Banks' operating circulars;

* * * * *

(d) *Warranties by Reserve Bank.* By handling a returned check under this subpart, a Reserve Bank makes the returning bank warranties as set forth in § 229.34 of this chapter, subject to the terms of part 229 of this chapter (Regulation CC). * * *

* * * * *

(f) *Methods of recovery.* (1) The Reserve Bank may recover the amount stated in paragraph (d) of this section by charging any account on its books that is maintained or used by the paying or returning bank (or by charging another returning Reserve Bank), if——

(i) The Reserve Bank made seasonable written demand on the paying or returning bank to assume defense of the action or proceeding; and

(ii) The paying or returning bank has not made any other arrangement for payment that is acceptable to the Reserve Bank.

(2) The Reserve Bank is not responsible for defending the action or proceeding before using this method of recovery. A Reserve Bank that has been charged under this paragraph (f) may recover from the paying or returning bank in the manner and under the circumstances set forth in this paragraph (f). A Reserve Bank's failure to avail itself of the remedy provided in this paragraph (f) does not prejudice its enforcement in any other manner of the indemnity agreement referred to in paragraph (c)(3) of this section.

* * * * *

(h) *Settlement.* A subsequent returning bank or depositary bank shall settle with its Administrative Reserve Bank for returned checks in the same manner and by the same time as for cash items presented for payment under this subpart. Settlement with its Administrative Reserve Bank is deemed to be settlement with the Reserve Bank from which the returning bank or depositary bank received the item.

(i) *Security interest.* When a paying or returning bank sends a returned check to a Reserve Bank, the paying bank, returning bank, and any prior returning bank grant to the paying bank's or returning bank's Administrative Reserve Bank a security interest in all of their respective assets in the possession of, or held for the account of, any Reserve Bank, to secure their respective obligations due or to become due to the Administrative Reserve Bank under this subpart or subpart C of part 229 of this chapter (Regulation CC). * * *

By order of the Board of Governors of the Federal Reserve System, September 10, 1997.

William W. Wiles,

Secretary of the Board.

[FR Doc. 97–24405 Filed 9–12–97; 8:45 am]

BILLING CODE 6210–01–P

DEPARTMENT OF HEALTH AND HUMAN SERVICES

Food and Drug Administration

21 CFR Part 610

Biological Product Standards; Technical Amendment

AGENCY: Food and Drug Administration, HHS.

ACTION: Final rule; technical amendment.

SUMMARY: The Food and Drug Administration (FDA) is amending the regulations for biological products standards to update a reference to the United States Pharmacopeia (USP). The agency has determined that the 1995 edition of the USP should be referenced rather than previous editions. This action is necessary to ensure the consistency and accuracy of the regulations.

DATES: The regulation is effective September 15, 1997. The Director of the Office of the Federal Register approves the incorporation by reference in accordance with 5 U.S.C. 552(a) and 1 CFR part 51 of a certain publication in 21 CFR 610.12(f), effective September 15, 1997.

FOR FURTHER INFORMATION CONTACT: Timothy W. Beth, Center for Biologics Evaluation and Research (HFM–17), Food and Drug Administration, 1401 Rockville Pike, suite 200N, Rockville, MD 20852, 301–594–3074.

SUPPLEMENTARY INFORMATION: Section 610.12(f) (21 CFR 610.12(f)) incorporates by reference the 1985 edition of the USP concerning test procedures for membrane filtration. Since the USP has been revised and the 1995 edition of the USP (23d Revision, 1995) is more readily available to the public, FDA has determined that § 610.12(f) should reference the test standards for the ''Test Procedures Using Membrane Filtration'' in the 1995 edition, in lieu of the test standards in the 1985 edition. The test standards for membrane filtration in the 1995 edition of the USP are identical to

those in the 1985 edition with the following exceptions:

(1) In the second paragraph under ''Apparatus,'' the 1985 edition states ''A membrane generally suitable for sterility testing has a normal porosity of .45 +/-0.02um, * * *,'' while the 1995 edition does not include the ''+/-0.02um''; and

(2) the 1985 edition did not have a section on ''Filterable Solids,'' because information of filterable solids was not available in 1985. The 1995 edition now has this information.

Because these differences in the two editions of the USP are insignificant, and the 1995 edition is more readily available to the public, the agency believes that the regulation should be amended, as indicated herein, to reflect the more recent version of the test standards. Accordingly § 610.12(f) is being amended to reflect the 1995 edition of the USP (23d Revision, 1995).

Publication of this document constitutes final action on this change under the Administrative Procedure Act (5 U.S.C. 553(b)(3)(B)). Notice and public procedure are unnecessary because FDA is merely updating a reference in its regulations.

List of Subjects in 21 CFR Part 610

Biologics, Incorporation by reference, Labeling, Reporting and recordkeeping requirements.

Therefore, under the Federal Food, Drug, and Cosmetic Act and under authority delegated to the Commissioner of Food and Drugs, 21 CFR part 610 is amended as follows:

PART 610—GENERAL BIOLOGICAL PRODUCTS STANDARDS

1. The authority citation for 21 CFR part 610 continues to read as follows:

Authority: Secs. 201, 501, 502, 503, 505, 510, 701 of the Federal Food, Drug, and Cosmetic Act (21 U.S.C. 321, 351, 352, 353, 355, 360, 371); secs. 215, 351, 352, 353, 361 of the Public Health Service Act (42 U.S.C. 216, 262, 263, 263a, 264).

2. Section 610.12 is amended by revising paragraph (f) to read as follows:

§ 610.12 Sterility.

* * * * *

(f) *Membrane filtration*. Bulk and final container material or products containing oil products in water-insoluble ointments may be tested for sterility using the membrane filtration procedure set forth in the United States Pharmacopeia (23d Revision, 1995), section entitled ''Test Procedures Using Membrane Filtration,'' pp. 1689 to 1690, which is incorporated by reference in accordance with 5 U.S.C. 552(a) and 1 CFR part 51. Copies are available from the United States Pharmacopeial Convention, Inc., 12601 Twinbrook Pkwy., Rockville, MD 20852, or available for inspection at the Center for Drug Evaluation and Research's Division of Medical Library, 5600 Fishers Lane, rm. 11B–40, Rockville, MD, or at the Office of the Federal Register, 800 North Capitol St. NW., suite 700, Washington, DC, except that:

(1) The test samples shall conform with paragraph (d) of this section; and

(2) In addition, for products containing a mercurial preservative, the product shall be tested in a second test using Fluid Thioglycollate Medium incubated at 20 to 25 °C in lieu of the test in Soybean-Casein Digest Medium.

* * * * *

Dated: September 2, 1997.

William K. Hubbard,

Associate Commissioner for Policy Coordination.

[FR Doc. 97–24349 Filed 9-12-97; 8:45 am]

BILLING CODE 4160–01–F

DEPARTMENT OF LABOR

Occupational Safety and Health Administration

29 CFR Part 1910

RIN 1218–AA95

Methylene Chloride; Amendment; Extension of Start-Up Date

AGENCY: Occupational Safety and Health Administration (OSHA), Department of Labor.

ACTION: Final Rule; amendment; extension of start-up date for compliance.

SUMMARY: The Occupational Safety and Health Administration (OSHA) is extending the start-up date for most provisions of the methylene chloride by 30 days to November 6, 1997 for larger employers. Employers with fewer than 20 employees and foam manufacturers with 20 to 99 employees have substantially later start-up dates which are not changed.

DATES: The effective date of this amendment is September 15, 1997.

Compliance: The start-up date for all provisions of the methylene chloride standard except initial monitoring and engineering controls for employers specified in § 1910.1052(n)(2)(iii)(c) is extended to November 6, 1997 (210 days after the effective date of the standard).

FOR FURTHER INFORMATION CONTACT: Bonnie Freeman, Director, OSHA Office of Public Affairs, U.S. Department of Labor, Room N3647, 200 Constitution Avenue, NW., Washington, DC 20210, telephone (202) 219–8151.

SUPPLEMENTARY INFORMATION: OSHA published a new methylene chloride standard January 10, 1997 (62 FR 1494). That standard included extended start-up dates for its various provisions depending on the size of the employer. The three categories of employers were employers with fewer than 20 employees, foam manufacturers with 20–99 employees and ''all other employers.''

OSHA published notification of OMB approval of information collection requirements on August 8, 1997 (62 FR 42666). As the start-up date for initial monitoring for ''all other employers'' was August 8, 1997, OSHA extended that date to September 7, 1997 to provide added notice to implement compliance.

The next start-up date specified for ''all other employers'' is October 7, 1997 for all provisions except engineering controls and initial monitoring. That is only 30 days after the extended date for completion of initial monitoring.

OSHA has concluded that more time is needed between completion of initial monitoring and implementation of the other provisions except engineering controls. This allows for a more efficient and effective implementation of those provisions such as for training, medical surveillance and other specified provisions. This is also consistent with OSHA's initial determination that 60 days is needed between completion of initial monitoring and implementation of the other provisions. OSHA is amending § 1910.1052(n)(2)(iii)(c) to implement this decision.

The date for completion of initial monitoring for employers with fewer than 20 employees is February 4, 1998 and for foam manufacturers with 20–99 employees is November 6, 1997. The date for all other provisions except engineering controls is 60 days later for each group. See 62 FR 1606 (January 10, 1997) for a listing of effective and start-up dates.

OSHA finds that there is good cause to issue this extension without notice and public comment because following such procedures would be impractical, unnecessary or contrary to the public interest in this case. OSHA believes that it is in the public interest to give certain employers additional time between completion of initial monitoring and implementation of other provisions.

Authority And Signature

This document was prepared under the direction of Gregory R. Watchman, Acting Assistant Secretary of Labor for Occupational Safety and Health, U.S.

Department of Labor, 200 Constitution Avenue, NW., Washington, DC 20210.

Signed at Washington, DC, this 9th day of September 1997.

Gregory R. Watchman,

Acting Assistant Secretary of Labor.

PART 1910—[AMENDED]

1. The general authority citation for subpart Z of CFR 29 part 1910 continues to read, in part, as follows:

Authority: Sections 4, 6, and 8 of the Occupational Safety and Health Act of 1970 (29 U.S.C. 653, 655, and 657); Secretary of Labor's Order No. 12–71 (36 FR 8754), 8–76 (41 FR 25059), 9–83 (48 FR 35736), 1–90 (55 FR 9033), or 6–96 (62 FR 111), as applicable; and 29 CFR Part 1911.

* * * * *

2. Paragraph (n)(2)(iii)(C) of § 1910.1052 is revised to read as follows:

§ 1910.1052 Methylene chloride.

* * * * *

(n) * * *

(2) * * *

(iii) * * *

(C) For all other employers, within 210 days after the effective date of this section.

* * * * *

[FR Doc. 97–24350 Filed 9–12–97; 8:45 am]

BILLING CODE 4510–26–M

PENSION BENEFIT GUARANTY CORPORATION

29 CFR Part 4044

Allocation of Assets in Single-Employer Plans; Interest Assumptions for Valuing Benefits

AGENCY: Pension Benefit Guaranty Corporation.

ACTION: Final rule.

SUMMARY: The Pension Benefit Guaranty Corporation's regulation on Allocation of Assets in Single-Employer Plans prescribes interest assumptions for valuing benefits under terminating single-employer plans. This final rule amends the regulation to adopt interest assumptions for plans with valuation dates in October 1997.

EFFECTIVE DATE: October 1, 1997.

FOR FURTHER INFORMATION CONTACT: Harold J. Ashner, Assistant General Counsel, Office of the General Counsel, Pension Benefit Guaranty Corporation, 1200 K Street, NW., Washington, DC 20005, 202–326–4024 (202–326–4179 for TTY and TDD).

SUPPLEMENTARY INFORMATION: The PBGC's regulation on Allocation of Assets in Single-Employer Plans (29 CFR part 4044) prescribes actuarial assumptions for valuing plan benefits of terminating single-employer plans covered by title IV of the Employee Retirement Income Security Act of 1974.

Among the actuarial assumptions prescribed in part 4044 are interest assumptions. These interest assumptions are intended to reflect current conditions in the financial and annuity markets.

Two sets of interest assumptions are prescribed, one set for the valuation of benefits to be paid as annuities and one set for the valuation of benefits to be paid as lump sums. This amendment adds to appendix B to part 4044 the annuity and lump sum interest assumptions for valuing benefits in plans with valuation dates during October 1997.

For annuity benefits, the interest assumptions will be 5.90 percent for the first 25 years following the valuation date and 5.00 percent thereafter. The annuity interest assumptions represent an increase (from those in effect for September 1997) of 0.20 percent for the first 25 years following the valuation date and are otherwise unchanged. For benefits to be paid as lump sums, the interest assumptions to be used by the PBGC will be 4.75 percent for the period during which a benefit is in pay status and 4.00 percent during any years preceding the benefit's placement in pay status. The lump sum interest assumptions represent an increase (from those in effect for September 1997) of 0.25 percent for the period during which a benefit is in pay status; they are otherwise unchanged.

The PBGC has determined that notice and public comment on this amendment are impracticable and contrary to the public interest. This finding is based on the need to determine and issue new interest assumptions promptly so that the assumptions can reflect, as accurately as possible, current market conditions.

Because of the need to provide immediate guidance for the valuation of benefits in plans with valuation dates during October 1997, the PBGC finds that good cause exists for making the assumptions set forth in this amendment effective less than 30 days after publication.

The PBGC has determined that this action is not a ''significant regulatory action'' under the criteria set forth in Executive Order 12866.

Because no general notice of proposed rulemaking is required for this amendment, the Regulatory Flexibility Act of 1980 does not apply. See 5 U.S.C. 601(2).

List of Subjects in 29 CFR Part 4044

Pension insurance, Pensions.

In consideration of the foregoing, 29 CFR part 4044 is amended as follows:

PART 4044—ALLOCATION OF ASSETS IN SINGLE-EMPLOYER PLANS

1. The authority citation for part 4044 continues to read as follows:

Authority: 29 U.S.C. 1301(a), 1302(b)(3), 1341, 1344, 1362.

2. In appendix B, a new entry is added to Table I, and Rate Set 48 is added to Table II, as set forth below. The introductory text of each table is republished for the convenience of the reader and remains unchanged.

Appendix B to Part 4044—Interest Rates Used To Value Annuities and Lump Sums

TABLE I.—ANNUITY VALUATIONS

[This table sets forth, for each indicated calendar month, the interest rates (denoted by i_1, i_2, . . . , and referred to generally as i_t) assumed to be in effect between specified anniversaries of a valuation date that occurs within that calendar month; those anniversaries are specified in the columns adjacent to the rates. The last listed rate is assumed to be in effect after the last listed anniversary date.]

For valuation dates occurring in the month—	The values of i_t are:					
	i_t	for t=	i_t	for t=	i_t	for t=
* * *	*	*	*	*		
October 1997	.0590	1–25	.0500	>25	N/A	N/A

TABLE II.—LUMP SUM VALUATIONS

[In using this table: (1) For benefits for which the participant or beneficiary is entitled to be in pay status on the valuation date, the immediate annuity rate shall apply; (2) For benefits for which the deferral period is y years (where y is an integer and $0 < y \leq n_1$), interest rate i_1 shall apply from the valuation date for a period of y years, and thereafter the immediate annuity rate shall apply; (3) For benefits for which the deferral period is y years (where y is an integer and n_1 $1 < y \leq n_1 + n_2$), interest rate i_2 shall apply from the valuation date for a period of $y - n_1$ years, interest rate i_1 shall apply for the following n_1 years, and thereafter the immediate annuity rate shall apply; (4) For benefits for which the deferral period is y years (where y is an integer and $y > n_1 + n_2$), interest rate i_3 shall apply from the valuation date for a period of $y - n_1 - n_2$ years, interest rate i_2 shall apply for the following n_2 years, interest rate i_1 shall apply for the following n_1 years, and thereafter the immediate annuity rate shall apply.]

Rate set	For plans with a valuation date		Immediate annuity rate (percent)	Deferred annuities (percent)				
	On or after	Before		i_1	i_2	i_3	n_1	n_2
*	*	*	*	*	*	*	*	*
48	10–1–97	11–1–97	4.75	4.00	4.00	4.00	7	8

Issued in Washington, D.C., on this 10th day of September 1997.

David M. Strauss,

Executive Director, Pension Benefit Guaranty Corporation.

[FR Doc. 97–24395 Filed 9–12–97; 8:45 am]

BILLING CODE 7708–01–P

DEPARTMENT OF THE TREASURY

Office of Foreign Assets Control

31 CFR Chapter V

Blocked Persons, Specially Designated Nationals, Specially Designated Terrorists, Specially Designated Narcotics Traffickers, and Blocked Vessels: Additional Designations and Removal of Two Individuals

AGENCY: Office of Foreign Assets Control, Treasury.

ACTION: Amendment of final rule.

SUMMARY: The Treasury Department is adding to appendices A and B to 31 CFR chapter V the name of one entity and one individual who have been determined to act for or on behalf of, or to be owned or controlled by, the Government of Libya. In addition, two individuals previously designated as specially designated narcotics traffickers are being removed from the appendices.

EFFECTIVE DATE: September 9, 1997.

FOR FURTHER INFORMATION CONTACT: Office of Foreign Assets Control, Department of the Treasury, Washington, DC 22201; tel.: 202/622–2520.

SUPPLEMENTARY INFORMATION:

Electronic Availability

This document is available as an electronic file on The Federal Bulletin Board the day of publication in the **Federal Register**. By modem, dial 202/512–1387 and type ''/GO FAC,'' or call 202/512–1530 for disk or paper copies. This file is available for downloading without charge in WordPerfect 5.1, ASCII, and Adobe Acrobat TM readable (*.PDF) formats. For Internet access, the address for use with the World Wide Web (Home Page), Telnet, or FTP protocol is: fedbbs.access.gpo.gov. The document is also accessible for downloading in ASCII format without charge from Treasury's Electronic Library (''TEL'') in the ''Business, Trade and Labor Mall'' of the FedWorld bulletin board. By modem, dial 703/321-3339, and select the appropriate self-expanding file in TEL. For Internet access, use one of the following protocols: Telnet = fedworld.gov (192.239.93.3); World Wide Web (Home Page) = http://www.fedworld.gov; FTP = ftp.fedworld.gov (192.239.92.205). Additional information concerning the programs of the Office of Foreign Assets Control is available for downloading from the Office's Internet Home Page: http://www.ustreas.gov/treasury/services/fac/fac.html, or in fax form through the Office's 24-hour fax-on-demand service: call 202/622–0077 using a fax machine, fax modem, or (within the United States) a touch-tone telephone.

Background

Appendices A and B to 31 CFR chapter V contain the names of blocked persons, specially designated nationals, specially designated terrorists, and specially designated narcotics traffickers designated pursuant to the various economic sanctions programs administered by the Office of Foreign Assets Control (''OFAC'') (62 FR 34934, June 27, 1997). Pursuant to the Libyan Sanctions Regulations, 31 CFR part 550, one Italian entity and one Italian individual are added to the appendices as persons who have been determined to act for or on behalf of, or to be owned or controlled by, the Government of Libya (''specially designated nationals'' or ''SDNs''). Any property subject to the jurisdiction of the United States in which an SDN has an interest is blocked, and U.S. persons are prohibited from engaging in any transaction or in dealing in any property in which an SDN has an interest.

In addition, pursuant to the Narcotics Trafficking Sanctions Regulations, 31 CFR part 536, and upon review of compliance with and enforcement of Executive Order 12978 of October 21, 1995, ''Blocking Assets and Prohibiting Transactions with Significant Narcotics Traffickers,'' the names of two individuals previously designated as specially designated narcotics traffickers (''SDNTS'') are being removed from the appendices. All real and personal property of these individuals, including all accounts not otherwise subject to blocking in which they have any interest, are unblocked; and all lawful transactions involving U.S. persons and these individuals are authorized.

Designations of foreign persons blocked pursuant to the Order are effective upon the date of determination by the Director of the Office of Foreign Assets Control, acting under authority delegated by the Secretary of the Treasury. Public notice of blocking is effective upon the date of filing with the **Federal Register**, or upon prior actual notice.

Since this regulation involves a foreign affairs function, the provisions of Executive Order 12866 and the Administrative Procedure Act (5 U.S.C. 553), requiring notice of proposed rulemaking, opportunity for public participation, and delay in effective date, are inapplicable. Because no notice of proposed rulemaking is required for this rule, the Regulatory Flexibility Act (5 U.S.C. 601–612) does not apply.

For the reasons set forth in the preamble, and under the authority of (1) 3 U.S.C. 301; 31 U.S.C. 321(b); 50 U.S.C.

1601-1641, 1701–1706; Pub. L. 101–410, 104 Stat. 890 (28 U.S.C. 2461 note); E.O. 12978, 60 FR 54579, 3 CFR, 1995 Comp., p. 415, with respect to the SDNT entries, and (2) 3 U.S.C. 301; 18 U.S.C. 2332d; 22 U.S.C. 287c, 2349aa–8 and 2349aa–9; 31 U.S.C. 321(b); 49 U.S.C. App. 1514; 50 U.S.C. 1601–1651, 1701–1706; Pub. L. 101–410, 104 Stat. 890 (28 U.S.C. 2461 note); E.O. 12543, 51 FR 875, 3 CFR, 1986 Comp., p. 181; E.O. 12544, 51 FR 1235, 3 CFR, 1986 Comp., p. 183; E.O. 12801, 57 FR 14319, 3 CFR, 1992 Comp., p. 294, with respect to the Libyan entries, appendices A and B to 31 CFR chapter V are amended as set forth below:

1. Appendices A and B to 31 CFR chapter V are amended by adding the following names inserted in alphabetical order (1) in appendix A, section I, and (2) under the heading ''Italy'' in appendix B:

BORTOLOTTI PETROLI S.p.A., Via San Desiderio, 11, 25020 Flero, Italy; Magazzino con Vendita Ingrosso, Via Garibaldi, 51, 25030 Paratico, Italy; Deposito, Via Zette, 14/A, 25087 Salo, Italy [SDN]

GIOVANNI IANORA, D.O.B. June 5, 1943, Via A. Costa 17, Milan, Italy; (individual)[SDN]

2. Appendices A and B to 31 CFR chapter V are amended by (1) removing the entries in the names ''RODRIGUEZ MORENO, Stephanie (Stethanine)'' and ''SANTACRUZ CASTRO, Sandra'' from appendix A and (2) under the heading ''Colombia'' in appendix B, removing the entries in the names ''RODRIGUEZ MORENO, Stephanie (Stethanine); and ''Santacruz Castro, Sandra''.

Dated: August 22, 1997.

R. Richard Newcomb,

Director, Office of Foreign Assets Control.

Approved: August 29, 1997.

James E. Johnson,

Assistant Secretary (Enforcement).

[FR Doc. 97–24276 Filed 9–9–97; 4:20 pm]

BILLING CODE 4810–25–P

PANAMA CANAL COMMISSION

35 CFR Part 104

RIN 3207–AA40

Vessel Transit Reservation System

AGENCY: Panama Canal Commission.

ACTION: Final rule.

SUMMARY: This document announces the final rule constituting the Panama Canal Vessel Transit Reservation System, which allows vessels to reserve transit slots in advance of arrival at the Panama Canal and be moved through the Canal on pre-assigned dates.

DATES: The effective time and date of the final rule is 12:00 Midnight (2400 hrs) (Panama time), September 30, 1997.

FOR FURTHER INFORMATION CONTACT: Chief of the Economic Research and Market Development Division, Panama Canal Commission, Unit 2300, APO AA 34011–2300, Telephone 011–507–272–3586; Fax 011–507–272–1622; E-mail: pcc.epem@pananet.com

SUPPLEMENTARY INFORMATION: On April 15, 1997, the Panama Canal Commission (PCC) published in the **Federal Register** (Volume 62, Number 72, Pages 18275–18277), an interim rule to test a revised vessel transit reservation system, which test commenced at 2:00 P.M. (1400 hrs), April 21, 1997. The 120-day test period ended on August 20, 1997. The test comment period, however, pursuant to Marine Director's Notice To Shipping Nos. N–7–97, Rev. 3 (dtd 8/8/97) and N–7–97, Rev. 4 (dtd 8/22/97), was extended to close of business, September 5, 1997.

Throughout the comment period, PCC received both formal and informal comments, in writing and orally, from ship agents, owners and operators and maritime industry trade groups. These comments included proposals that PCC abolish the vessel transit reservation system and revert to a first come-first serve system, that PCC delay full implementation of the system for cruise line customers, complaints about various components of the test system, and suggestions and proposals to improve and facilitate implementation of the test system on a permanent basis.

During the test, PCC gained valuable hands-on experience with all operational aspects of the test system. The empirical, statistical and other data gathered during the test was beneficial in assessing the actual impact of the test system on a representative cross-section of Canal customers.

Specifically, the test revealed that overall utilization of the 21 reserved transit slots available for all three booking periods did not appreciably change in the second and third booking periods. The (new) first booking period was utilized principally by passenger vessels. The test also revealed that, based on current Canal capacity, 21 reserved transit slots is the maximum number that the system can accommodate, consistent with safe and efficient operation of the Canal. On the other hand, allocation of the 21 reserved transit slots among the three booking periods is an area in which operational considerations afford PCC some flexibility. PCC, therefore, will continue to monitor and, where appropriate, may periodically change the number of reserved transit slots allocated among the three booking periods, as well as allocations among various vessel types. Any such changes will be announced in future Marine Director's notices to shipping.

Changing the number of days that comprise each of the three booking periods, as some customers urged, would not have any foreseeable adverse impact on Canal operations. Any such changes, however, while no doubt benefiting some customers, would negatively impact others. Balancing fairness and equity for all Canal customers, the final rule does not change the length of any of the three booking periods.

Missing from the interim rule was criteria for canceling transit ''condition 3'', which triggers the additional booking fee whenever the total number of vessels awaiting transit at both termini of the Canal is projected by Canal authorities to be, within 2 days, 90 or more vessels for at least 2 consecutive days (hereafter, ''premium booking fee''). Seesaw declarations and cancellations of condition 3 in response to fluctuating vessel arrivals/departures disrupted orderly operation of the system and, on occasion, resulted in hardship for some customers required to pay the premium fee. PCC, therefore, will adopt an implementation provision (to be announced in a Marine Director's notice to shipping), stating that, following invocation, Canal authorities will revoke condition 3 whenever the number of vessels awaiting transit is projected to be reduced to 80 or fewer vessels.

Concerning the premium booking fee, this feature of the test, by far, generated the most comment and criticism from Canal customers. Consideration was given to eliminating or reducing the amount of the fee. After careful review and reconsideration, however, PCC reaffirms its original assessment, made on the basis of objective economic data, that payment of the current premium booking fee to secure expeditious transit of the Canal during periods when condition 3 is in effect, affords customers who utilize this service tangible economic benefits, when compared to the high costs of transit delays of uncertain duration during such periods. Nevertheless, PCC is sensitive to customer complaints that the factors which cause condition 3 to be invoked are largely beyond their control. Consequently, PCC will redouble efforts to schedule maintenance, Canal improvement projects and other activities that adversely impact transit operations, to the extent practicable, so as to minimize

the number of occasions when condition 3 is actually invoked, including, giving notice to Canal customers as far in advance as reasonably possible. In addition, PCC will guarantee a vessel booked for transit a reserved transit slot at the booking fee rate in effect at the time of booking, irrespective of any premium booking fee that may be in effect at the time of actual transit.

The test revealed certain deficiencies in the schedule of cancellation fees reflected in section 104.9 of the interim rule. The revised cancellation fee schedule set forth in the final rule tracks the prescribed booking periods and provides for progressive cancellation fees for vessels booked for transit in all three booking periods. The restructured cancellation fees, especially those for cancellations made upon short notice, are expected to increase booking opportunities for Canal customers, particularly in the third booking period.

Based upon historical criteria no longer relevant, commercial passenger vessels had previously been afforded a transit preference, without being subjected to the terms and costs of the vessel transit reservation system. Commencing with the test, passenger vessels were required to reserve transit slots, the same as other vessels, in order to obtain transit preference. During the test period, however, passenger vessels booked for transit were afforded transitional relief by not having to pay the prescribed booking and other fees paid by other vessels. PCC provided these vessels a statement, however, showing what the booking fee for the reserved transit would have been had transitional relief not been in effect. Commencing on the effective date of the final rule, passenger vessels will be subject to all requirements of the system, including payment of the prescribed fees.

Cruise line customers stated that the test did not afford them sufficient time to build the additional costs of the final rule into their business plans and fee schedules, thereby justifying an extension of transitional relief through the remainder of the 1997 and the 1998 cruise seasons. It is noted, however, that the standard industry practice of cruise lines is to reserve the right to change published passenger fee schedules without notice. This protects cruise lines from having to absorb unanticipated higher operating costs that might be incurred after publication. Moreover, cruise line customers had a full 6 months to make whatever operational and financial adjustments might be necessary by reason of PCC's implementation of the final rule. Specifically, throughout the 184-day comment period, that commenced on March 5, 1997 and ended on September 5, 1997, cruise line customers were provided financial and other data that should have enabled them to calculate their higher costs by reason of their being subjected to the requirements of the vessel transit reservation system. Given the extraordinary length of the comment period, the right of cruise lines to adjust fee schedules and the data provided throughout the test, PCC believes the test period was sufficient to enable cruise line customers to familiarize themselves adequately with all operational and financial components of the test system, thus making additional transitional relief unnecessary.

This final rule involves public property, the Panama Canal, and, therefore, is excluded from coverage of the Administrative Procedures Act (APA). 5 USC 553(a)(2). Nevertheless, in testing the interim rule, PCC elected generally to follow the notice-and-comment rule-making procedures of section 553. In establishing the effective date of the final rule, however, PCC elected not to follow the delayed effective date provision of section 553(d). The effective date of this final rule, therefore, is 12:00 Midnight (2400 hrs) (Panama time), September 30, 1997.

Until the final rule announced in this document takes effect, the interim rule published in the **Federal Register** (Volume 62, Number 72, Pages 18275–18277) and implementation provisions announced in Marine Director's notices to shipping, will continue to govern vessel transit reservations at the Panama Canal.

The final rule announced in this document constitutes the Panama Canal Vessel Transit Reservation System that, based on the subject test, PCC believes best serves the needs of PCC, commensurate with safety and efficiency, and the world shipping industry.

PCC is exempt from Executive Order 12866. The provisions of that directive, therefore, do not apply to this final rule. Even if the Order was applicable, this final rule would not have any significant economic impact on any substantial number of small entities under the Regulatory Flexibility Act of 1980.

Additionally, PCC has determined that implementation of this final rule will not have an adverse effect on competition, employment, investment, productivity, innovation, or the ability of U.S.-based enterprises to compete with foreign-based enterprises in domestic or foreign markets.

The Secretary of PCC certifies that these regulatory changes meet the applicable standards contained in sections 3(a) and 3(b)(2) of Executive Order No. 12988 of February 7, 1996.

List of Subjects in 35 CFR Part 104

Panama Canal, Reporting and recordkeeping requirements, Vessels.

Accordingly, Part 104 is revised to read as follows:

PART 104—VESSEL TRANSIT RESERVATION SYSTEM

Sec.
104.1 Applicability and scope.
104.2 Definitions.
104.3 Booking periods; allocation of reserved slots.
104.4 Booked transits.
104.5 Passenger vessel preference; priority transits.
104.6 Booking fees.
104.7 Penalties.
104.8 Re-scheduling.
104.9 Cancellations.
104.10 Regular transits.
104.11 Temporary suspension of system.
104.12 Further implementation.

Authority: 22 U.S.C. 3811.

§ 104.1 Applicability and scope.

Subject to the limitations imposed by Article III of the 1901 Treaty to Facilitate the Construction of a Ship Canal, entered into by the United States and Great Britain, and by Articles II and VI of the 1977 Treaty concerning the Permanent Neutrality and Operation of the Panama Canal, between the United States and the Republic of Panama, and subject to compliance with the provisions of this part, the Panama Canal Vessel Transit Reservation System allows vessels, including certain commercial passenger vessels, desiring transit of the Panama Canal, to reserve transit slots in advance of arrival at the Canal and be moved through the Canal on pre-assigned dates.

§ 104.2 Definitions.

(a) *Booked for transit* means that a vessel, in advance of arriving at the Canal, has been assigned a specific date by Canal authorities on which it will be moved through the Canal and that the vessel has otherwise complied with the provisions of this part.

(b) *Commercial passenger vessel* means a vessel that principally transports passengers, as opposed to cargo, and runs on fixed published schedules.

(c) *Regular transit* means movement through the Canal of a vessel that has not been booked for transit.

(d) *Required arrival time* means the date and the hour of the day established by Canal authorities as the deadline by

which a vessel booked for transit must arrive at a terminus of the Canal in order to transit on its reserved transit date.

(e) *Vessel agent* means a person or entity that has been authorized by a vessel owner or operator, in the manner prescribed by Canal authorities, to book vessels for transit in accordance with this part.

§ 104.3 Booking periods; allocation of reserved slots.

(a) Vessel agents only may request reserved transit slots for vessels during the following booking periods:

(1) First period—365 to 22 days prior to the requested transit date.

(2) Second period—21 to 4 days prior to the requested transit date.

(3) Third period—3 to 2 days prior to the requested transit date.

(b) A total of 21 reserved transit slots will be made available for all three booking periods, allocation of which among the booking periods is to be determined by Canal authorities. Canal authorities, from time to time, may adjust the total number of available reserved transit slots, commensurate with continued safe and efficient operation of the Canal.

§ 104.4 Booked transits.

(a) The specific daily order of vessels and mix of vessel types transiting the Canal, whether booked or regular transits, shall be determined by Canal authorities. Except as provided in this part, a vessel booked for transit may not transit prior to its reserved transit date, unless Canal authorities determine that assigning the vessel an earlier transit slot would not impair safe and efficient operation of the Canal.

(b) Notwithstanding assignment of an earlier reserved transit slot by Canal authorities, all vessels booked for transit will be charged the prescribed booking fee.

(c) Substitution of reserved transit slots between or among vessels booked for transit will be permitted only on conditions specified by Canal authorities.

§ 104.5 Passenger vessel preference; priority transits.

(a) Subject to being booked for transit and to the extent Canal authorities determine preference does not impair safe and efficient operation of the Canal, commercial passenger vessels running on fixed published schedules will be given preference over other vessels in transiting.

(b) Notwithstanding any contrary provision, from time to time, any vessel, whether or not subject to the vessel transit reservation system (including, but not limited to certain warships), as determined by Canal authorities, may be moved through the Canal on a priority basis.

§ 104.6 Booking fees.

(a) The booking fee for reserving a transit slot for a vessel measured in accordance with § 135.13(a) of this chapter, shall be $0.26 per PC/UMS Net Ton, or $1500, whichever is greater.

(b) The booking fee for reserving a transit slot for a vessel subject to transitional relief measures and measured in accordance with § 135.13(b) of this chapter, shall be $0.23 per Panama Canal Gross Ton, as specified on the last tonnage certificate issued to the vessel by Canal authorities between March 23, 1976 and September 30, 1994, inclusive, plus $0.26 per PC/UMS Net Ton of on-deck capacity, or $1500, whichever is greater.

(c) Whenever the total number of vessels awaiting transit at both termini of the Canal is projected by Canal authorities to be, within 2 days, 90 or more vessels for at least 2 consecutive days, any vessel booked for transit that transits the Canal while this condition is in effect, shall automatically be assessed a booking fee of $0.69 per PC/UMS Net Ton, or $4000, whichever is greater.

(d) Notwithstanding the provisions of paragraph (c) of this section or any other contrary provision of this part, Canal authorities will guarantee a vessel booked for transit, a reserved transit slot at the booking fee rate in effect at the time the vessel is booked for transit, irrespective of any premium booking fee rate that may be in effect at the time the vessel actually transits the Canal.

§ 104.7 Penalties.

(a) The reserved transit slot of a vessel booked for transit will be canceled by Canal authorities and a penalty fee assessed in a sum equal to the prescribed booking fee, or $1500, whichever is greater, in the following situations:

(1) When a vessel that is subject to transit restrictions (e.g., clear cut, clear cut daylight) has been booked for transit and does not arrive at a terminus of the Canal by 0200 hours of the day of the scheduled transit;

(2) When a vessel that is not subject to transit restrictions has been booked for transit and does not arrive at a terminus of the Canal by 1400 hours of the day of the scheduled transit; or

(3) When a vessel booked for transit arrives on time but cannot or, at the vessel operator's election, does not transit as scheduled, despite the readiness of Canal authorities to proceed.

(b) Canal authorities may waive assessment of a penalty fee if the vessel agent presents acceptable proof that late arrival of the vessel was due to a medical or humanitarian emergency arising during the voyage, or a naturally occurring, extraordinary phenomenon or event of major proportions that could not have been reasonably predicted in advance.

(c) Failure of the vessel agent to provide complete and accurate information required by Canal authorities when requesting transit bookings may result in rejection of the booking request or cancellation of the vessel's reserved transit slot.

(d) When a vessel's reserved transit slot is canceled, and unless otherwise directed by the vessel agent, upon arrival, Canal authorities will re-schedule the vessel for regular transit.

§ 104.8 Re-scheduling.

(a) Except as otherwise provided and without the vessel booked for transit being assessed a penalty fee, the vessel agent may request cancellation of a vessel's reserved transit slot and rescheduling of the vessel for regular transit or, alternatively, may request assignment of an alternate reserved transit slot, in the following situations:

(1) If for whatever reason Canal authorities cancel the transit of a vessel booked for transit that is otherwise ready to proceed as scheduled; or

(2) If for whatever reason Canal authorities delay the transit of a vessel booked for transit to such a degree that the delay is likely to cause the vessel to be unable to meet its required arrival time for a later, second reserved transit, booked before the delay of the first reserved transit occurred.

(b) A vessel booked for transit will be deemed to have transited the Canal on its reserved transit date if the vessel arrives at the first set of locks at either terminus of the Canal prior to 2400 hours that day and its in-transit time (ITT) is 18 hours or less. ITT begins when the vessel enters the first set of locks at either Canal terminus and ends when the vessel departs the last set of locks at the opposite terminus. No booking fee will be charged if, due to events that are beyond the control of the vessel booked for transit, as determined by Canal authorities, ITT exceeds 18 hours; except that this provision shall not apply in the case of a turn-around transit, where the vessel enters and exits the same set of locks at either Canal terminus.

§ 104.9 Cancellations.

(a) A vessel agent may cancel the transit reservation of a vessel by giving notice prescribed by Canal authorities. In such event, and except as otherwise provided, a cancellation fee will be charged. The amount of the fee will depend on the amount of notice (days or hours) received by Canal authorities in advance of the vessel's required arrival time, according to the following schedule:

Notice periods (in advance of required arrival time)	Cancellation fee (the greater of)
31 to 364 days	10% of booking fee or $500.
22 to 30 days	40% of booking fee or $750.
4 to 21 days	60% of booking fee or $1000.
3 days to 8 hours	80% of booking fee or $1,250.
Less than 8 hours	100% of booking fee.

(b) Receipt of notice of cancellation of a transit reservation by Canal authorities after the vessel's required arrival time will result in levy of a cancellation fee equal to the entire prescribed booking fee.

§ 104.10 Regular transits.

Vessels that are not booked for transit will be scheduled for movement through the Canal on the date and in the order determined by Canal authorities. In establishing the daily schedule of vessels to be moved through the Canal, the order in which vessels arrive is only one of several considerations. In general, regular transits will equal or exceed in number, one-half the total number of daily vessel transits.

§ 104.11 Temporary suspension of system.

(a) Canal authorities may temporarily suspend, in whole or in part, for whatever period of time deemed necessary, the vessel transit reservation system established by this part, whenever Canal authorities determine that such action is necessary to ensure continued safe and efficient operation of the Canal.

(b) No penalty or fee will be levied against any vessel booked for transit whose reserved transit slot is canceled by reason of a temporary suspension of the system pursuant to this section.

§ 104.12 Further implementation.

(a) To facilitate safe and efficient operation of the system, Canal authorities may establish additional policies and procedures, define additional terms and issue clarifications and interpretations not inconsistent with the provisions of this part. Such further implementation will be published and distributed to Canal customers through notices to shipping or other appropriate means determined by Canal authorities.

(b) In the event any provision of this part conflicts with any implementation provision issued pursuant to this section, the provisions of this part shall govern.

Dated: September 9, 1997.

John A. Mills,

Secretary, Panama Canal Commission.

[FR Doc. 97–24310 Filed 9–12–97; 8:45 am]

BILLING CODE 3640–04–U

DEPARTMENT OF DEFENSE

48 CFR Parts 204 and 253

[DFARS Case 97–D019]

Defense Federal Acquisition Regulation Supplement; Data Universal Numbering System Number

AGENCY: Department of Defense (DoD).

ACTION: Final rule.

SUMMARY: The Director of Defense Procurement has issued a final rule amending the Defense Federal Acquisition Regulation Supplement (DFARS) to revise guidance on the use of Data Universal Number System (DUNS) numbers for contractor identification.

DATES: Effective October 1, 1997.

FOR FURTHER INFORMATION CONTACT: Ms. Sandra Haberlin, PDUSD (A&T) DP (DAR), IMD 3D139, 3062 Defense Pentagon, Washington, DC 20301–3062. Telephone (703) 602–0131; telefax (703) 602–0350. Please cite DFARS Case 97–D019.

SUPPLEMENTARY INFORMATION:

A. Background

This final rule places DFARS guidance on the use of DUNS numbers with references to the FAR guidance on that subject; and removes DFARS guidance on locally developed coding systems.

B. Regulatory Flexibility Act

The final rule does not constitute a significant revision within the meaning of FAR 1.501 and Public Law 98–577, and publication for public comment is not required. However, comments from small entities concerning the affected DFARS subparts will be considered in accordance with 5 U.S.C. 610. Such comments should be submitted separately and should cite DFARS Case 97–D019 in correspondence.

C. Paperwork Reduction Act

The Paperwork Reduction Act does not apply, because the final rule does not impose any reporting or recordkeeping requirements which require Office of Management and Budget approval under 44 U.S.C. 3501, *et seq.*

List of Subjects in 48 CFR Parts 204 and 253

Government procurement.

Michele P. Peterson,

Executive Editor Defense Acquisition Regulations Council.

Therefore, 48 CFR Parts 204 and 253 are amended as follows:

1. The authority citation for 48 CFR Parts 204 and 253 continues to read as follows:

Authority: 41 U.S.C. 241 and 48 CFR Chapter 1.

PART 204—ADMINISTRATIVE MATTERS

2. Section 204.7201 is amended in paragraph (b) by revising the second sentence to read as follows:

§ 204.7201 Definitions.

* * * * *

(b) * * * CAGE codes and Data Universal Numbering System (DUNS) numbers are two examples of contractor identification codes.

3. Section 204.7202–2 is revised to read as follows:

§ 204.7202–2 DUNS numbers.

Requirements for use of DUNS numbers are contained in FAR 4.602(d) and 4.603.

§ 204.7202–4 [Removed]

4. Section 204.7202–4 is removed.

5. Section 204.7204 is revised to read as follows:

§ 204.7204 Maintenance of the CAGE file.

(a) Changes, except name changes, may be submitted in writing—

(1) By the entity identified by the code, using company letterhead, through the contract administration office;

(2) By the contracting office; or

(3) By the contract administration office (see also FAR subpart 42.12, Novation and Change-of-Name Agreements);

(4) Using the DD Form 2051, facsimile or electronic equivalent, to: Defense Logistics Services Center, DLSC–SBB, Federal Center, 74 N. Washington, Battle Creek, MI 49017–3084, Telephone Numbers: DSN 932–4358, FTS 552–4358, commercial (616) 961–4358, Facsimile: (616) 961–4528, 4388,

Internet: http://www.dlsc.dla.mil/form2051.htm

(b) The change-of-name agreement shall be submitted to DLSC–SBB by the contracting officer responsible for execution of the agreement (see FAR subpart 42.12). In the event there are no current contracts in force, each contracting and contract administration office receiving notification of changes from the commercial entity shall forward a copy of the change notice annotated with the CAGE code to DLSC–SBB unless the change notice indicates that DLSC–SBB has already been notified.

(c) Additional guidance for maintaining CAGE codes is set forth at Volume 7 of DoD 4100.39–M, Defense Integrated Data System (DIDS) Manual.

204.7204–1 and 204.7204–2 [Removed]

6. Sections 204.7204–1 and 204.7204–2 are removed.

204.7206 [Amended]

7. Section 204.7206 is amended in the introductory text by removing the phrase ''and contractor identification number codes''.

PART 253—FORMS

8. Section 253.204–70 is amended by revising paragraph (b)(5)(ii)(A) to read as follows:

253.204–70 DD Form 350, Individual Contracting Action Report.

* * * * *

(b) * * *

(5) * * *

(ii) * * *

(A) BLOCK B5A, CONTRACTOR IDENTIFICATION NUMBER. Enter the contractor's 9-position Data Universal Numbering System (DUNS) number (see FAR 4.602(d) and 4.603).

* * * * *

[FR Doc. 97–24385 Filed 9–12–97; 8:45 am]

BILLING CODE 5000–04–M

Proposed Rules

Federal Register
Vol. 62, No. 178
Monday, September 15, 1997

This section of the FEDERAL REGISTER contains notices to the public of the proposed issuance of rules and regulations. The purpose of these notices is to give interested persons an opportunity to participate in the rule making prior to the adoption of the final rules.

DEPARTMENT OF JUSTICE

Immigration and Naturalization Service and Executive Office for Immigration Review

8 CFR Parts 3 and 236

[INS No. 1855–97; AG ORDER No. 2114–97]

RIN 1115–AE88

Procedures for the Detention and Release of Criminal Aliens by the Immigration and Naturalization Service and for Custody Redeterminations by the Executive Office for Immigration Review

AGENCY: Immigration and Naturalization Service, and Executive Office for Immigration Review, Justice.

ACTION: Proposed rule.

SUMMARY: This rule proposes to amend the regulations of the Immigration and Naturalization Service (Service) and the Executive Office for Immigration Review (EOIR) by establishing a regulatory framework for the detention of criminal aliens pursuant to the Transition Period Custody Rules (TPCR) set forth in the Illegal Immigration Reform and Immigrant Responsibility Act of 1996 (IIRIRA). This rule is necessary to provide uniform guidance to Service officers and immigration judges regarding application of the TPCR.

DATES: Written comments must be submitted on or before October 15, 1997.

ADDRESSES: Please submit written comments, including an original and two copies, to the Director, Policy Directives and Instructions Branch, Immigration and Naturalization Service, 425 ''I'' Street NW., Room 5307, Washington, DC 20536. To ensure proper handling, please reference INS number 1855–97 on all correspondence. Comments are available for public inspection at the above address by calling (202) 514–3048 to arrange for an appointment.

FOR FURTHER INFORMATION CONTACT: Brad Glassman, Office of the General Counsel, Immigration and Naturalization Service, 425 ''I'' Street NW., Room 6100, Washington DC 20536, telephone (202) 305–0846.

SUPPLEMENTARY INFORMATION:

Background

On October 9, 1996, the Commissioner of the Immigration and Naturalization Service notified Congress that the Service lacks the detention space and personnel necessary to comply with the mandatory detention provisions of section 440(c) of the Antiterrorism and Effective Death Penalty Act of 1996 (AEDPA), Pub. L. No. 104–132, 110 Stat. 1214, and section 236(c) of the Immigration and Nationality Act (Act), as amended by the Illegal Immigration Reform and Immigrant Responsibility Act of 1996 (IIRIRA), Pub. L. No. 104–208, section 303(a), 110 Stat. 3009. By operation of law, *see* IIRIRA section 303(b)(2), the notification results in the temporary replacement of these mandatory detention provisions with the Transition Period Custody Rules set forth in IIRIRA section 303(b)(3). The TPCR provide for the detention, *inter alia*, of specified classes of criminal aliens, and allow some of these aliens to be considered for release in the exercise of the Attorney General's discretion. This proposed rule establishes uniform rules and standards to implement the release provisions of the TPCR for criminal aliens.

The TPCR apply, *inter alia*, to specifically enumerated classes of criminal aliens in deportation proceedings (i.e., where the alien is deportable and proceedings commenced before April 1, 1997), and in removal proceedings (i.e., where the alien is either deportable or inadmissible, and proceedings commenced on or after April 1, 1997). The TPCR do not apply in exclusion proceedings (i.e., where the alien is inadmissible and proceedings commenced before April 1, 1997) because the TPCR replace mandatory detention provisions applicable to deportation and removal proceedings, *see* IIRIRA section 303(b)(2), but do not replace the analogous provision applicable to exclusion proceedings, section 236(e) of the INA (as designated prior to April 1, 1997).

The TPCR apply differently with respect to aliens in removal proceedings than they do with respect to aliens in deportation proceedings. The TPCR replace revised section 236(c) of the Immigration and Nationality Act (Act), which governs the detention of specified classes of aliens during removal proceedings. The TPCR do not, however, replace the revised section 241 of the Act, which governs detention after a final order of removal. As a result, the TPCR apply only during removal proceedings; the revised section 241 of the Act governs detention after a final order of removal.

By contrast, the TPCR apply both during deportation proceedings and after a final order of deportation (tracking the coverage of section 440(c) of AEDPA). It is expected, however,that few, if any, criminal aliens with a final order of deportation will be released in the exercise of discretion, because it will be exceptionally difficult for such an alien to demonstrate the absence of a flight risk by clear and convincing evidence as required to be considered for release in the exercise of discretion. In a report issued in March 1996, the Office of the Inspector General of the United States Department of Justice found that 89 percent of non-detained aliens with final orders of deportation failed to surrender for deportation when ordered to do so by the Service (Report #I–96–03). Finally, as in the past, no custody determination or redetermination need by undertaken by the Service if actual deportation or removal is imminent.

The TPCR apply to the following classes of aliens in deportation proceedings (or subject to a final order of deportation): aliens convicted of aggravated felonies, under the definition of ''aggravated felony'' as amended by IIRIRA; aliens deportable for having committed any offense covered in section 241(a)(2)(A)(ii) (multiple crimes involving moral turpitude), (A)(iii) (aggravated felonies), (B) (certain controlled substance offenses), (C) (certain firearms offenses), or (D) (certain other crimes) of the Act, as designated prior to April 1, 1997. In removal proceedings, the TPCR will apply to these same categories of aliens, and also to aliens inadmissible under section 212(a)(2) or 212(a)(3)(B) of the Act. Again, the TPCR do not apply to aliens in exclusion proceedings.

Aliens not subject to the TPCR will fall within the general detention

authority applicable to aliens in deportation, exclusion, or removal proceedings. Section 242(a)(1) of the Act (as designated prior to April 1, 1997) continues to govern the detention of deportable aliens not falling within the coverage of the TPCR. Sections 212(d)(5) (as amended by Pub. L. 104–208) and 235(b) (as designated prior to April 1, 1997) of the Act continue to govern the detention and parole of non-aggravated felons in exclusion proceedings. (Section 236(e) of the Act, as designated prior to April 1, 1997, continues to govern the detention of aggravated felons in exclusion proceedings.) Sections 235(b)(2) and 236(a) of the Act govern the detention of aliens in removal proceedings who are not subject to the TPCR. The TPCR do not affect the detention of aliens placed into expedited removal proceedings under section 235(b)(1) of the Act (as in effect on April 1, 1997).

Only two classes of criminal aliens subject to the TPCR may be considered for release from custody. The first class of releasable criminal aliens consists of those who have been ''lawfully admitted.'' The second class consists of those who cannot be removed from the United States because the designated country of deportation or removal will not accept their return.

As to the first class, the term ''lawfully admitted'' will have a slightly different meaning in removal proceedings than in deportation proceedings. Without exception, any alien in deportation proceedings or subject to a final order of deportation whose last entry into the United States was lawful is ''lawfully admitted'' for purposes of the TPCR. An alien in deportation proceedings or subject to a final order of deportation whose last entry was unlawful will not be considered ''lawfully admitted'' for purposes of the TPCR (except that an alien in deportation proceedings who remains in status as a permanent resident, conditional permanent resident, or temporary resident shall be considered ''lawfully admitted'' despite an unlawful last entry). In contrast, ''lawful admission'' for aliens in removal proceedings will be determined according to the definition of ''admission'' in section 101(a)(13) of the Act (as amended by Pub. L. No. 104–208). Pursuant to the statutory definition, an alien who last entered the United States upon inspection and authorization by an immigration officer will be considered ''lawfully admitted.''

As to the second class of criminals who may be considered for release under the TPCR, i.e., those whose designated country of deportation or removal will not accept their return, release authority will rest with the Service district director (or other appropriate INS officer), the official best situated to review and assess unremovability. The Service has developed successful procedures for review and, where appropriate, release of aliens within this small subclass of detainees. The Service's determination of unremovability will be final, and custody determinations pursuant to section 303(b)(3)(B)(ii) of IIRIRA will not be subject to redetermination by EOIR.

The statute provides that, in order to be considered for release in the exercise of discretion, criminal aliens subject to the TPCR who fall within either of the two releasable classes must demonstrate that they will not pose a danger to the safety of other persons or of property, and will likely appear for any scheduled proceeding, including immigration hearings or other appearances required by the Service or EOIR. Following precedent decisions of the Board of Immigration Appeals (Board) interpreting similar language, the inquiry into danger to persons and property is separate from and precedes the inquiry into flight risk. If the alien cannot demonstrate the absence of danger to persons or property, the inquiry ends. Only upon such a showing may the alien further demonstrate the absence of flight risk in order to be considered fro release in the exercise of discretion.

The proposed rule establishes uniform rules and standards for the exercise of the discretion conferred by the statute upon the Attorney General. The overarching concern reflected in the proposed rule is that aliens posing a danger to persons or property remain in custody until removed from the United States. A second concern arises from the high percentage of aliens released from Service custody who abscond from lawful processes and become fugitives. In general, Congress has expressed in IIRIRA a clear intention that criminal aliens be detained, subject only to very limited exceptions.

The proposed rule accommodates these concerns by creating three classes of criminal aliens subject to the TPCR. The first class consists of criminals judged by the Attorney General to present, by reason of their prior conviction or conduct, a danger to the community or a flight risk so great as to warrant a *per se* rule of non-release. Aliens in this class include, for example, those who have been convicted of murder, rape, or sexual abuse of a minor, and those who have escaped or attempted to escape from the lawful custody of a prison, government agency, or officer.

The second class consists of criminal aliens whose prior convictions or conduct are sufficiently serious to present a strong detention interest. Aliens in this class would include, for example, those who have been convicted of controlled substance trafficking or lawful firearm possession, or who have failed to appear for a criminal trial or for removal. In such cases, detention will generally be required, but two classes of lawfully admitted aliens will be afforded an opportunity to present countervailing evidence and be considered for release: (1) aliens lawfully admitted for permanent residence; and (2) lawfully admitted aliens who have remained free of convictions, immigration violations, and the like for an uninterrupted period of ten years prior to the institution of proceedings (not including any periods of incarceration or detention). However, lawfully admitted aliens from both classes who are eligible to present countervailing evidence must still establish by clear and convincing evidence that they pose no danger to the safety of persons or of property and that they are likely to appear for any scheduled proceeding. As discussed above, the meaning of ''lawfully admitted'' will differ for aliens in deportation proceedings and for those in removal proceedings.

The third class consists of criminal aliens who have been convicted of lesser serious offenses, such as crimes of theft with an aggregate sentence of less than three years, and simple possession of a controlled substance. In such cases, lawfully admitted aliens will be subject to the TPCR's baseline criteria alone, and may be considered for release upon demonstrating, by clear and convincing evidence, a lack of dangerousness and an absence flight risk. Aliens in the third class may still be found to present extremely serious indicia of flight risk or danger to the safety of persons or of property, and it is expected that even in this class only unusually compelling cases will warrant release in the exercise of discretion. Again, the meaning of ''lawfully admitted'' will differ for aliens in deportation proceedings and for those in removal proceedings.

The proposed rule sets forth the governing standards both for the Service and for EOIR. With some exceptions, the provisions are parallel, and, as in the past, the procedural regulations in § 3.19 operate pursuant to the substantive regulations (her, in part 236) implementing the detention and release authority conferred in the statute. The

immigration judges will generally continue to exercise custody redetermination jurisdiction over deportable aliens and aliens who enter without inspection (subject to the exceptions and within the limits established in the TPCR and in this proposed rule). Aliens arriving at ports-of-entry and other ''arriving aliens'' (including aliens paroled pursuant to section 212(d)(5) of the Act) will remain subject solely to the parole authority of the Service.

The proposed rule also contains provisions for a stay of an immigration judge's order redetermining custody conditions when the Service appeals the custody decision to the Board. The rule provides for an automatic stay where the alien is subject to the TPCR, section 236(c) of the Act, or former 242(a)(2) of the Act (as amended by AEDPA), and the district director has set a bond of $10,000 or more (or has denied bond outright). The stay remains in effect until the Board renders a decision on the merits of the custody appeal.

In all other cases, the rule allows the Service to file an appeal of the custody decision with the Board, and an emergency stay request in connection with the appeal. The Board will than have discretion to grant or deny the stay request. These provisions provide an added measure of assurance that persons believed to present a danger to the community or a risk of flight are not released.

30-Day Comment Period

This rule is being proposed with a 30-day notice and comment period due to the urgent need for regulatory guidance to Service officers and immigration judges regarding application of the TPCR.

Regulatory Flexibility Act

The Attorney General, in accordance with the Regulatory Flexibility Act (5 U.S.C. 605(b)), has reviewed this regulation and, by approving it, certifies that this rule will not have a significant economic impact on a substantial number of small entities because it affects individual aliens, not small entities.

Unfunded Mandates Reform Act of 1995

This rule will not result in the expenditure by State, local, and tribal governments, in the aggregate, or by the private sector, of $100 million or more in any one year, and it will not significantly or uniquely affect small governments. Therefore, no actions were deemed necessary under the provisions of the Unfunded Mandates Reform Act of 1995.

Small Business Regulatory Enforcement Fairness Act of 1996

This rule is not a major rule as defined by section 804 of the Small Business Regulatory Enforcement Act of 1996. This rule will not result in an annual effect on the economy of $100 million or more; a major increase in costs or prices; or significant adverse effects on competition, employment, investment, productivity, innovation, or on the ability of United States-based companies to compete with foreign-based companies in domestic and export markets.

Executive Order 12866

This rule is considered by the Department of Justice, Immigration and Naturalization Service, to be a ''significant regulatory action'' under Executive Order 12866, section 3(f), Regulatory Planning and Review. Accordingly, this regulation has been submitted to the Office of Management and Budget for review.

Executive Order 12612

The regulation adopted herein will not have substantial direct effects on the States, on the relationship between the National Government and the States, or on the distribution of power and responsibilities among the various levels of government. Therefore, in accordance with Executive Order 12612, it is determined that this rule does not have sufficient federalism implication to warrant the preparation of a Federalism Assessment.

Executive Order 12988

This proposed rule meets the applicable standards set forth in sections 3(a) and 3(b)(2) of Executive Order 12988.

List of Subjects

8 CFR Part 3

Administrative practice and procedure, Immigration, Organization and functions (Government agencies).

8 CFR Part 236

Administratvie practice and procedure, Aliens, Immigration.

Accordingly, chapter I of title 8 of the Code of Federal Regulations is proposed to be amended as follows:

PART 3—EXECUTIVE OFFICE FOR IMMIGRATION REVIEW

1. The authority citation for part 3 is revised to read as follows:

Authority: 5 U.S.C. 301; 8 U.S.C. 1103, 1226, 1362; 28 U.S.C. 509, 510, 1746; sec. 2 Reorg. Plan No. 2 of 1950, 3 CFR, 1949–1953 Comp., p. 1002, sec. 303(b)(3) of Pub. L. 104–208.

2. In § 3.19, paragraphs (h) and (i) are added to read as follows:

§ 3.19 Custody/Bond.

* * * * *

(h)(1)(i) While the Transition Period Custody Rules (TPCR) set forth in section 303(b)(3) of Public Law 104–208 remain in effect, an immigration judge may not redetermine conditions of custody imposed by the Service with respect to the following classes of aliens:

(A) Aliens in exclusion proceedings;

(B) Arriving aliens in removal proceedings, including persons paroled after arrival pursuant to section 212(d)(5) of the Act;

(C) Aliens described in section 237(a)(4) of the Act;

(D) Aliens subject to section 303(b)(3)(A) of Public Law 104–208 who are not ''lawfully admitted'' (as defined in § 236.1(c)(3) of this chapter); or

(E) Aliens designated in § 236.1(c) of this chapter as ineligible to be considered for release.

(ii) Nothing in this paragraph shall be construed as prohibiting an alien from seeding a redetermination of custody conditions by the Service in accordance with part 235 or 236 of this chapter. In addition, with respect to paragraphs (h)(1)(i) (C), (D), and (E) of this section, nothing in this paragraph shall be construed as prohibiting an alien from seeking a determination by an immigration judge that the alien is not properly included within those paragraphs.

(2)(i) Upon expiration of the Transition Period Custody Rules set forth in section 303(b)(3) of Public Law 104–208, an immigration judge may not redetermine conditions of custody imposed by the Service with respect to the following classes of aliens:

(A) Aliens in exclusion proceedings;

(B) Arriving aliens in removal proceedings, including aliens paroled after arrival pursuant to section 212(d)(5) of the Act;

(C) Aliens described in section 237(a)(4) of the Act;

(D) Aliens in removal proceedings subject to section 236(c)(1) of the Act (as in effect after expiration of the Transition Period Custody Rules); and

(E) Aliens in deportation proceedings subject to section 242(a)(2) of the Act (as in effect prior to April 1, 1997, and as amended by section 440(c) of Public Law 104–132.

(ii) Nothing in this paragraph shall be construed as prohibiting an alien from

seeking a redetermination of custody conditions by the Service in accordance with part 235 or 236 of this chapter. In addition, with respect to paragraphs (h)(2)(i) (C), (D), and (E) of this section, nothing in this paragraph shall be construed as prohibiting an alien from seeking a determination by an immigration judge that the alien is not properly included within those paragraphs

(3) Except as otherwise provided in paragraph (h)(1) of this section, an alien subject to section 303(b)(3)(A) of Public Law 104–208 may apply to the Immigration Court, in a manner consistent with paragraphs (c)(1) through (c)(3) of this section, for a redetermination of custody conditions set by the Service. Such an alien must first demonstrate, by clear and convincing evidence, that release would not pose a danger to other persons or to property. If an alien meets this burden, the alien must further demonstrate, by clear and convincing evidence, that the alien is likely to appear for any scheduled proceeding or interview.

(4) *Unremovable aliens.* A determination of a district director (or other official designated by the Commissioner) regarding the exercise of authority under section 303(b)(3)(B)(ii) of Public Law 104–208 (concerning release of aliens who cannot be removed because the designated country of removal will not accept their return) is final, and shall not be subject to redetermination by an immigration judge.

(i) *Stay of custody order pending Service appeal.* (1) *General emergency stay authority.* The Board of Immigration Appeals (Board) has the authority to stay the order of an immigration judge redetermining the conditions of custody of an alien when the Service appeals the custody decision. The Service is entitled to seek an emergency stay form the Board in connection with such an appeal at any time.

(2) *Automatic stay in certain cases.* If an alien is subject to section 242(a)(2) of the Act (as in effect prior to April 1, 1997, and as amended by section 440(c) of Public Law 104–132), section 303(b)(3)(A) of Public Law 104–208, or section 236(c)(1) of the Act (as designated on April 1, 1997), and the district director has denied the alien's request for release or has set a bond of $10,000 or more, any order of the immigration judge authorizing release (on bond or otherwise) shall be stayed upon the Service's filing of Form EOIR–43 with the Immigration Court on the day the order is issued, and shall remain in abeyance pending decision of the appeal by the Board of Immigration Appeals. The stay shall lapse upon failure of the Service to file a timely notice of appeal in accordance with § 3.38.

PART 236—APPREHENSION AND DETENTION OF INADMISSIBLE AND DEPORTABLE ALIENS; REMOVAL OF ALIENS ORDERED REMOVED

3. The authority citation for part 236 is revised to read as follows:

Authority: 8 U.S.C. 1103, 1182, 1224, 1225, 1226, 1227, 1362; sec. 303(b) of Pub. L. No. 104–208; 8 CFR part 2.

4. Section 236.1 is amended by:

a. Revising paragraph (c)(1);

b. Redesignating paragraphs (c)(2) through (c)(5), as paragraphs (c)(8) through (c)(11) respectively; and by

c. Adding new paragraphs (c)(2) through (c)(7), to read as follows:

§ 236.1 Apprehension, custody, and detention.

* * * * *

(c) * * *

(1) (i) After the expiration of the Transition Period Custody Rules (TPCR) set forth in section 303(b)(3) of Public Law 104–208, no alien described in section 236(c)(1) of the Act may be released from custody during removal proceedings except pursuant to section 236(c)(2) of the Act.

(ii) Paragraphs (c)(2) through (c)(8) of this section shall govern custody determinations for aliens subject to the TPCR while they remain in effect. For purposes of this section, an alien ''subject to the TPCR'' is an alien described in section 303(b)(3)(A) of Public Law 104–208 who is in deportation proceedings, subject to a final order of deportation, or in removal proceedings. The TPCR do not apply to aliens in exclusion proceedings under former section 236 of the Act, aliens in expedited removal proceedings under section 235(b)(1) of the Act, or aliens subject to a final order of removal.

(2) *Aliens not lawfully admitted.* Subject to paragraph (c)(6) of this section, but notwithstanding any other provision within this section, an alien subject to the TPCR who is not lawfully admitted is not eligible to be considered for release from custody.

(i) An alien in deportation proceedings or subject to a final order of deportation is ''lawfully admitted'' for purposes of this section if the alien's last entry into the United States was lawful. An alien in deportation proceedings or subject to a final order of deportation whose last entry was unlawful will not be considered ''lawfully admitted'' for purposes of this section, unless the alien remains in status as an alien lawfully admitted for permanent residence, conditionally admitted for permanent residence, or lawfully admitted for temporary residence.

(ii) An alien in removal proceedings is ''lawfully admitted'' for purposes of this section if the alien has been ''admitted'' within the terms of section 101(a)(13) of the act (as in effect on April 1, 1997).

(3) *Criminal aliens eligible to be considered for release.* Except as provided in this section, or otherwise provided by law, an alien subject to the TPCR may be considered for release from custody if lawfully admitted. Such an alien must first demonstrate, by clear and convincing evidence, that release would not pose a danger to the safety of other persons or of property. If an alien meets this burden, the alien must further demonstrate, by clear and convincing evidence, that the alien is likely to appear for any scheduled proceeding (including any appearance required by the Service or EOIR) in order to be considered for release in the exercise of discretion.

(4) *Criminal aliens ineligible to be considered for release except in certain special circumstances.* An alien subject to section 303(b)(3)(A) (ii) or (iii) of Pub. L. No. 104–208 is ineligible to be considered for release if the alien:

(i) Is described in section 241(a)(2)(C) of the Act (as in effect prior to April 1, 1997), or has been convicted of a crime described in section 101(a)(43) (B), (E)(ii), or (F) of the Act (as in effect on April 1, 1997);

(ii) Has been convicted of a crime described in section 101(a)(43)(G) of the Act (as in effect on April 1, 1997) or a crime or crimes involving moral turpitude related to property, and sentenced therefor (including in the aggregate) to at least 3 year's imprisonment;

(iii) Has failed to appear for an immigration proceeding without reasonable cause or has been subject to a bench warrant or similar legal process (unless quashed, withdrawn, or canceled as improvidently issued);

(iv) Has been convicted of a crime described in section 101(a)(43) (Q) or (T) of the Act (as in effect on April 1, 1997);

(v) Has been convicted in a criminal proceeding of a violation of section 273, 274, 274C, 276, or 277 of the Act, or has admitted the factual elements of such a violation;

(vi) Has overstayed a period granted for voluntary departure; or

(vii) Has failed to surrender or report for removal pursuant to an order of exclusion, deportation, or removal,

unless the alien was lawfully admitted and either remains in status as a permanent resident or has not, since the commencement of proceedings or within the 10 years prior thereto, been convicted of a crime, failed to comply with an order to surrender or a period of voluntary departure, or been subject to a bench warrant or similar legal process (unless quashed, withdrawn, or canceled as improvidently issued). An alien eligible to be considered for release under this paragraph must meet the burdens described in paragraph (c)(3) of this section in order to be released from custody in the exercise of discretion.

(5) *Criminal aliens ineligible to be considered for release.* A criminal alien subject to section 303(b)(3)(A) (ii) or (iii) of Pub. L. No. 104–208 is ineligible to be considered for release if the alien:

(i) Is described in section 237(a)(2)(D)(i) or (ii) (as in effect on April 1, 1997), or has been convicted of a crime described in section 101(a)(43) (A), (C), (E)(i), (H), (I), (K)(iii), or (L) of the Act (as in effect on April 1, 1997);

(ii) Is described in section 237(a)(2)(A)(iv) of the Act;

(iii) Has escaped or attempted to escape from the lawful custody of a local, state, or Federal prison, agency, or officer within the United States; or

(iv) Does not wish to pursue, or is statutorily ineligible for, any form of relief from exclusion, deportation, or removal under this chapter or the Act.

(6) If the district director determines that an Alien subject to section 303(b)(3)(A) (ii) or (iii) of Pub. L. 104–208 cannot be removed from the United States because the designated country of removal of deportation will not accept the alien's return, the district director may, in the exercise of discretion, release the alien from custody upon such terms and conditions as the district director may prescribe, without regard to paragraphs (c)(2) through (c)(5) of this section. Under no circumstances, however, shall the district director release from custody an alien whose release would pose a danger to persons or to property, or who is unlikely to appear for any scheduled proceeding (including any appearance required by the Service or EOIR). The district director's custody decision shall not be subject to redetermination by an immigration judge.

(7) *Construction.* A reference in this section to a provision in section 241 of the Act as in effect prior to April 1, 1997, shall be deemed to include a reference to the corresponding provision in section 237 of the Act as in effect on April 1, 1997. A reference in this section to a ''crime'' shall be considered to include a reference to a conspiracy or attempt to commit such a crime. In calculating the 10-year period specified in paragraph (c)(4) of this section, no period during which the alien was detained or incarcerated shall count toward the total. Nothing in this part shall be construed as prohibiting an alien from seeking reconsideration of the Service's determination that the alien is within a category barred from release under this part.

* * * * *

Dated: September 5, 1997.

Janet Reno,

Attorney General.

[FR Doc. 97–24411 Filed 9–11–97; 8:45 am]

BILLING CODE 4410–10–M

DEPARTMENT OF TRANSPORTATION

Federal Aviation Administration

14 CFR Part 39

[Docket No. 97–NM–198–AD]

RIN 2120–AA64

Airworthiness Directives; Dassault Model Falcon 2000 Series Airplanes

AGENCY: Federal Aviation Administration, DOT.

ACTION: Notice of proposed rulemaking (NPRM).

SUMMARY: This document proposes the adoption of a new airworthiness directive (AD) that is applicable to certain Dassault Model Falcon 2000 series airplanes. This proposal would require a revision to the Limitations section of the FAA-approved Airplane Flight Manual (AFM) to limit the allowed loads in the baggage compartment aft of the center baggage net. The proposed AD also would require replacement of the center baggage net in the baggage compartment with a net having reinforced straps, which would terminate the requirement for the AFM revision. This proposal is prompted by a report indicating that the center baggage net cannot sustain design loads in the event of an accident. The actions specified by the proposed AD are intended to prevent injury to passengers, as a result of inadequate breaking strength of the baggage net, in the event of an accident.

DATES: Comments must be received by October 10, 1997.

ADDRESSES: Submit comments in triplicate to the Federal Aviation Administration (FAA), Transport Airplane Directorate, ANM–103, Attention: Rules Docket No. 97–NM–198–AD, 1601 Lind Avenue SW, Renton, Washington 98055–4056. Comments may be inspected at this location between 9:00 a.m. and 3:00 p.m., Monday through Friday, except Federal holidays.

The service information referenced in the proposed rule may be obtained from Dassault Falcon Jet Corporation, Teterboro Airport, P.O. Box 2000, South Hackensack, New Jersey 07606. This information may be examined at the FAA, Transport Airplane Directorate, 1601 Lind Avenue SW, Renton, Washington.

FOR FURTHER INFORMATION CONTACT: Tom Groves, Aerospace Engineer, Standardization Branch, ANM–113, FAA, Transport Airplane Directorate, 1601 Lind Avenue, SW., Renton, Washington 98055–4056; telephone (425) 227–1503; fax (425) 227–1149.

SUPPLEMENTARY INFORMATION:

Comments Invited

Interested persons are invited to participate in the making of the proposed rule by submitting such written data, views, or arguments as they may desire. Communications shall identify the Rules Docket number and be submitted in triplicate to the address specified above. All communications received on or before the closing date for comments, specified above, will be considered before taking action on the proposed rule. The proposals contained in this notice may be changed in light of the comments received.

Comments are specifically invited on the overall regulatory, economic, environmental, and energy aspects of the proposed rule. All comments submitted will be available, both before and after the closing date for comments, in the Rules Docket for examination by interested persons. A report summarizing each FAA-public contact concerned with the substance of this proposal will be filed in the Rules Docket.

Commenters wishing the FAA to acknowledge receipt of their comments submitted in response to this notice must submit a self-addressed, stamped postcard on which the following statement is made: ''Comments to Docket No. 97–NM–198–AD.'' The postcard will be date stamped and returned to the commenter.

Availability of NPRMs

Any person may obtain a copy of this NPRM by submitting a request to the FAA, Transport Airplane Directorate, ANM–103, Attention: Rules Docket No. 97–NM–198–AD, 1601 Lind Avenue SW, Renton, Washington 98055–4056.

Discussion

The Direction Generale de l'Aviation Civile (DGAC), which is the airworthiness authority for France, recently notified the FAA that an unsafe condition may exist on certain Dassault Model Falcon 2000 series airplanes. The DGAC advises that a static strength test, conducted by Dassault, demonstrated that the main straps of the center baggage net installed in the baggage compartment did not sustain the maximum allowed loads permitted aft of the net. This condition, if not corrected, could result in injury to passengers in the event of an accident.

Explanation of Relevant Service Information

Dassault issued Falcon 2000 Airplane Flight Manual (AFM) Temporary Change No. 31 (undated), which describes procedures for revising the AFM to limit allowed loads in the baggage compartment aft of the center baggage net. Dassault also has issued Service Bulletin F2000–76 (F2000–25–2), dated December 11, 1996, which describes procedures for replacing the center baggage net in the baggage compartment with a net having reinforced straps. Accomplishment of the replacement eliminates the need for the AFM revision. The DGAC classified this service bulletin and AFM temporary change as mandatory and issued French airworthiness directive 96–291–002(B), dated December 4, 1996, in order to assure the continued airworthiness of these airplanes in France.

FAA's Conclusions

This airplane model is manufactured in France and is type certificated for operation in the United States under the provisions of section 21.29 of the Federal Aviation Regulations (14 CFR 21.29) and the applicable bilateral airworthiness agreement. Pursuant to this bilateral airworthiness agreement, the DGAC has kept the FAA informed of the situation described above. The FAA has examined the findings of the DGAC, reviewed all available information, and determined that AD action is necessary for products of this type design that are certificated for operation in the United States.

Explanation of Requirements of Proposed Rule

Since an unsafe condition has been identified that is likely to exist or develop on other airplanes of the same type design registered in the United States, the proposed AD would require a revision to the Limitations section of the FAA-approved AFM to limit the allowed loads in the baggage compartment aft of the center baggage net. The proposed AD also would require replacing the center baggage net in the baggage compartment with a net having reinforced straps, which would terminate the requirement for the AFM revision. The actions would be required to be accomplished in accordance with the service bulletin and AFM temporary change described previously.

Cost Impact

The FAA estimates that 20 airplanes of U.S. registry would be affected by this proposed AD.

It would take approximately 1 work hour per airplane to accomplish the proposed replacement, at an average labor rate of $60 per work hour. Required parts would cost approximately $520 per airplane. Based on these figures, the cost impact on U.S. operators of the replacement proposed by this AD is estimated to be $11,600, or $580 per airplane.

It would take approximately 1 work hour per airplane to accomplish the proposed AFM revision, at an average labor rate of $60 per work hour. Based on these figures, the cost impact on U.S. operators of the AFM revision proposed by this AD is estimated to be $1,200, or $60 per airplane.

Based on the above figures, the total cost impact on U.S. operators of the proposed replacement and AFM revision is estimated to be $12,800, or $640 per airplane.

The cost impact figures discussed above are based on assumptions that no operator has yet accomplished any of the proposed requirements of this AD action, and that no operator would accomplish those actions in the future if this AD were not adopted.

Regulatory Impact

The regulations proposed herein would not have substantial direct effects on the States, on the relationship between the national government and the States, or on the distribution of power and responsibilities among the various levels of government. Therefore, in accordance with Executive Order 12612, it is determined that this proposal would not have sufficient federalism implications to warrant the preparation of a Federalism Assessment.

For the reasons discussed above, I certify that this proposed regulation (1) is not a ''significant regulatory action'' under Executive Order 12866; (2) is not a ''significant rule'' under the DOT Regulatory Policies and Procedures (44 FR 11034, February 26, 1979); and (3) if promulgated, will not have a significant economic impact, positive or negative, on a substantial number of small entities under the criteria of the Regulatory Flexibility Act. A copy of the draft regulatory evaluation prepared for this action is contained in the Rules Docket. A copy of it may be obtained by contacting the Rules Docket at the location provided under the caption **ADDRESSES.**

List of Subjects in 14 CFR Part 39

Air transportation, Aircraft, Aviation safety, Safety.

The Proposed Amendment

Accordingly, pursuant to the authority delegated to me by the Administrator, the Federal Aviation Administration proposes to amend part 39 of the Federal Aviation Regulations (14 CFR part 39) as follows:

PART 39—AIRWORTHINESS DIRECTIVES

1. The authority citation for part 39 continues to read as follows:

Authority: 49 U.S.C. 106(g), 40113, 44701.

§ 39.13 [Amended]

2. Section 39.13 is amended by adding the following new airworthiness directive:

Dassault Aviation: Docket 97–NM–198–AD.

Applicability: Model Falcon 2000 airplanes, serial numbers 2 through 31 inclusive; certificated in any category.

Note 1: This AD applies to each airplane identified in the preceding applicability provision, regardless of whether it has been otherwise modified, altered, or repaired in the area subject to the requirements of this AD. For airplanes that have been modified, altered, or repaired so that the performance of the requirements of this AD is affected, the owner/operator must request approval for an alternative method of compliance in accordance with paragraph (c) of this AD. The request should include an assessment of the effect of the modification, alteration, or repair on the unsafe condition addressed by this AD; and, if the unsafe condition has not been eliminated, the request should include specific proposed actions to address it.

Compliance: Required as indicated, unless accomplished previously.

To prevent injury to passengers as a result of inadequate breaking strength of the baggage net, accomplish the following:

(a) Within 60 days after the effective date of this AD, revise the Limitations section of the FAA-approved Airplane Flight Manual (AFM) by inserting into the AFM a copy of Falcon 2000 AFM Temporary Change No. 31 (undated).

Note 2: The revision of the AFM required by this paragraph may be accomplished by inserting a copy of Falcon 2000 AFM Temporary Change No. 31 in the AFM. When this temporary change has been incorporated into general revisions of the AFM, the general revisions may be inserted in the AFM,

provided that the information contained in the general revisions is identical to that specified in Falcon 2000 AFM Temporary Change No. 31.

(b) Within 6 months after the effective date of this AD, replace the center baggage net in the baggage compartment with a net having reinforced straps, in accordance with Dassault Service Bulletin F2000–76 (F2000–25–2), dated December 21, 996. After this replacement is accomplished, the AFM revision required by paragraph (a) of this AD may be removed from the AFM.

(c) An alternative method of compliance or adjustment of the compliance time that provides an acceptable level of safety may be used if approved by the Manager, Standardization Branch, FAA, Transport Airplane Directorate. Operators shall submit their requests through an appropriate FAA Principal Maintenance Inspector, who may add comments and then send it to the Manager, Standardization Branch.

Note 3: Information concerning the existence of approved alternative methods of compliance with this AD, if any, may be obtained from the Manager, Standardization Branch.

(d) Special flight permits may be issued in accordance with sections 21.197 and 21.199 of the Federal Aviation Regulations (14 CFR 21.197 and 21.199) to operate the airplane to a location where the requirements of this AD can be accomplished.

Issued in Renton, Washington, on September 9, 1997.

James V. Devany,

Acting Manager, Transport Airplane Directorate, Aircraft Certification Service.

[FR Doc. 97–24342 Filed 9–12–97; 8:45 am]

BILLING CODE 4910–13–U

DEPARTMENT OF TRANSPORTATION

Federal Aviation Administration

14 CFR Part 39

[Docket No. 97–NM–132–AD]

RIN 2120–AA64

Airworthiness Directives; McDonnell Douglas Model DC–9–10, –20, –30, and –40, and C–9 (Military) Series Airplanes

AGENCY: Federal Aviation Administration, DOT.

ACTION: Notice of proposed rulemaking (NPRM).

SUMMARY: This document proposes the adoption of a new airworthiness directive (AD) that is applicable to all McDonnell Douglas Model DC–9–10, –20, –30, and –40, and C–9 (military) series airplanes. This proposal would require modifying the piping of the potable water system. This proposal is prompted by reports of ice forming on the control cables in the wheel well of the left main landing gear due to the freezing and rupturing of undrained potable water pipes. The actions specified by the proposed AD are intended to prevent such ice formation, which could render the slat, aileron, and spoiler flight controls inoperative, and consequently could result in reduced controllability of the airplane.

DATES: Comments must be received by October 27, 1997.

ADDRESSES: Submit comments in triplicate to the Federal Aviation Administration (FAA), Transport Airplane Directorate, ANM–103, Attention: Rules Docket No. 97–NM–132–AD, 1601 Lind Avenue SW, Renton, Washington 98055–4056. Comments may be inspected at this location between 9:00 a.m. and 3:00 p.m., Monday through Friday, except Federal holidays.

The service information referenced in the proposed rule may be obtained from The Boeing Company, Douglas Products Division, 3855 Lakewood Boulevard, Long Beach, California 90846, Attention: Technical Publications Business Administration, Department C1–L51 (2–60). This information may be examined at the FAA, Transport Airplane Directorate, 1601 Lind Avenue SW, Renton, Washington; or at the FAA, Transport Airplane Directorate, Los Angeles Aircraft Certification Office, 3960 Paramount Boulevard, Lakewood, California.

FOR FURTHER INFORMATION CONTACT: Albert Lam, Aerospace Engineer, Systems and Equipment Branch, ANM–130L, FAA, Transport Airplane Directorate, Los Angeles Aircraft Certification Office, 3960 Paramount Boulevard, Lakewood, California 90712; telephone (562) 627–5346; fax (562) 627–5210.

SUPPLEMENTARY INFORMATION:

Comments Invited

Interested persons are invited to participate in the making of the proposed rule by submitting such written data, views, or arguments as they may desire. Communications shall identify the Rules Docket number and be submitted in triplicate to the address specified above. All communications received on or before the closing date for comments, specified above, will be considered before taking action on the proposed rule. The proposals contained in this notice may be changed in light of the comments received.

Comments are specifically invited on the overall regulatory, economic, environmental, and energy aspects of the proposed rule. All comments submitted will be available, both before and after the closing date for comments, in the Rules Docket for examination by interested persons. A report summarizing each FAA-public contact concerned with the substance of this proposal will be filed in the Rules Docket.

Commenters wishing the FAA to acknowledge receipt of their comments submitted in response to this notice must submit a self-addressed, stamped postcard on which the following statement is made: ''Comments to Docket No. 97–NM–132–AD.'' The postcard will be date stamped and returned to the commenter.

Availability of NPRMs

Any person may obtain a copy of this NPRM by submitting a request to the FAA, Transport Airplane Directorate, ANM–103, Attention: Rules Docket No. 97–NM–132–AD, 1601 Lind Avenue SW, Renton, Washington 98055–4056.

Discussion

The FAA received numerous reports, including one from January 1997, indicating that, during flight, ice formed on the control cables in the wheel well of the left main landing gear on McDonnell Douglas Model DC–9 series airplanes. The cause of the ice formation was attributed to the freezing and rupturing of an undrained potable water pipe. This condition, if not corrected, could render the slat, aileron, and spoiler flight controls inoperative, which could result in reduced controllability of the airplane.

Explanation of Relevant Service Information

The FAA has reviewed and approved McDonnell Douglas DC–9 Service Bulletin 38–27, Revision 1, dated May 16, 1978, which describes procedures for modifying the piping of the potable water system. The modification involves replacing the pipe assemblies of the pressurized potable water system with a hose assembly, and installing a metal shroud over the hose assembly. Accomplishment of the modification will divert water leakage into the cargo compartment drain system.

Explanation of Requirements of Proposed Rule

Since an unsafe condition has been identified that is likely to exist or develop on other products of this same type design, the proposed AD would require modifying the piping of the potable water system. The actions would be required to be accomplished in accordance with the service bulletin described previously.

Cost Impact

There are approximately 570 McDonnell Douglas Model DC–9–10, –20, –30, and –40, and C–9 (military) series airplanes of the affected design in the worldwide fleet. The FAA estimates that 316 airplanes of U.S. registry would be affected by this proposed AD, that it would take approximately 20 work hours per airplane to accomplish the proposed actions, and that the average labor rate is $60 per work hour. Required parts would cost approximately $4,000 per airplane. Based on these figures, the cost impact of the proposed AD on U.S. operators is estimated to be $1,643,200, or $5,200 per airplane.

The cost impact figure discussed above is based on assumptions that no operator has yet accomplished any of the requirements of this AD action, and that no operator would accomplish those actions in the future if this AD were not adopted. However, the FAA has been advised that 219 U.S.-registered airplanes are in compliance in accordance with the requirements of this AD. Therefore, the future economic cost impact of this rule on U.S. operators is now $504,400.

Regulatory Impact

The regulations proposed herein would not have substantial direct effects on the States, on the relationship between the national government and the States, or on the distribution of power and responsibilities among the various levels of government. Therefore, in accordance with Executive Order 12612, it is determined that this proposal would not have sufficient federalism implications to warrant the preparation of a Federalism Assessment.

For the reasons discussed above, I certify that this proposed regulation (1) is not a ''significant regulatory action'' under Executive Order 12866; (2) is not a ''significant rule'' under the DOT Regulatory Policies and Procedures (44 FR 11034, February 26, 1979); and (3) if promulgated, will not have a significant economic impact, positive or negative, on a substantial number of small entities under the criteria of the Regulatory Flexibility Act. A copy of the draft regulatory evaluation prepared for this action is contained in the Rules Docket. A copy of it may be obtained by contacting the Rules Docket at the location provided under the caption **ADDRESSES**.

List of Subjects in 14 CFR Part 39

Air transportation, Aircraft, Aviation safety, Safety.

The Proposed Amendment

Accordingly, pursuant to the authority delegated to me by the Administrator, the Federal Aviation Administration proposes to amend part 39 of the Federal Aviation Regulations (14 CFR part 39) as follows:

PART 39—AIRWORTHINESS DIRECTIVES

1. The authority citation for part 39 continues to read as follows:

Authority: 49 U.S.C. 106(g), 40113, 44701.

§39.13 [Amended]

2. Section 39.13 is amended by adding the following new airworthiness directive:

McDonnell Douglas: Docket 97–NM–132–AD.

*Applicability: All Model DC–9–*10, –20, –30, and –40, and C–9 (military) series airplanes, certificated in any category.

Note 1: This AD applies to each airplane identified in the preceding applicability provision, regardless of whether it has been otherwise modified, altered, or repaired in the area subject to the requirements of this AD. For airplanes that have been modified, altered, or repaired so that the performance of the requirements of this AD is affected, the owner/operator must request approval for an alternative method of compliance in accordance with paragraph (b) of this AD. The request should include an assessment of the effect of the modification, alteration, or repair on the unsafe condition addressed by this AD; and, if the unsafe condition has not been eliminated, the request should include specific proposed actions to address it.

Compliance: Required as indicated, unless accomplished previously.

To prevent ice from forming on the control cables in the wheel well of the left main landing gear, which could render the slat, aileron, and spoiler flight controls inoperative and, consequently, could result in reduced controllability of the airplane, accomplish the following:

(a) Within 18 months after the effective date of this AD, modify the piping of the potable water system in accordance with McDonnell Douglas DC–9 Service Bulletin 38–27, Revision 1, dated May 16, 1978.

(b) An alternative method of compliance or adjustment of the compliance time that provides an acceptable level of safety may be used if approved by the Manager, Los Angeles Aircraft Certification Office (ACO), FAA, Transport Airplane Directorate. Operators shall submit their requests through an appropriate FAA Principal Maintenance Inspector, who may add comments and then send it to the Manager, Los Angeles ACO.

Note 2: Information concerning the existence of approved alternative methods of compliance with this AD, if any, may be obtained from the Los Angeles ACO.

(c) Special flight permits may be issued in accordance with sections 21.197 and 21.199 of the Federal Aviation Regulations (14 CFR 21.197 and 21.199) to operate the airplane to a location where the requirements of this AD can be accomplished.

Issued in Renton, Washington, on September 9, 1997.

James V. Devany,

Acting Manager, Transport Airplane Directorate, Aircraft Certification Service.

[FR Doc. 97–24340 Filed 9–12–97; 8:45 am]

BILLING CODE 4910–13–U

DEPARTMENT OF TRANSPORTATION

Federal Aviation Administration

14 CFR Parts 107, 108, and 139

[Docket Nos. 28979 and 28978]

RIN 2120–AD–46 and 2120–AD–45

Airport and Aircraft Operator Security; Notice of Public Meetings

AGENCY: Federal Aviation Administration (FAA), DOT.

ACTION: Notice of public meeting.

SUMMARY: This notice announces two public meetings on the notices of proposed rulemaking (NPRM), Airport Security (Parts 107 and 139), and Aircraft Operator Security (Part 108), published in the **Federal Register** on August 1, 1997, The purpose of these meetings is to provide an additional opportunity for the public to comment on the proposals.

DATES: The public meetings will be held on October 15, 1997, at 9:00 a.m., in Washington, DC; and October 22, 1997, at 9:00 a.m., in Fort Worth, TX. Registration will begin at 8:30 a.m. on the day of the meeting at each location.

ADDRESSES: The public meetings will be held at the following locations:

(1) October 15, 1997, 9:00 a.m., Federal Aviation Administration, 3rd floor Auditorium, 800 Independence Ave., SW, Washington, DC 20591.

(2) October 22, 1997, 9:00 a.m., Fritz Lanham Federal Building, room 1A03, 819 Taylor St., Fort Worth, TX 76102.

Persons who are unable to attend the meetings may mail their comments on the NPRMs in triplicate to: Federal Aviation Administration, Office of the Chief Counsel, Rules Docket (AGC–200), Docket Nos. 28979 (Parts 107 and 139), 28978 (Part 108), 800 Independence Ave., SW, Washington, DC 20591. Written comments to the docket will receive the same consideration as statements made at the public meetings.

FOR FURTHER INFORMATION CONTACT: Requests to present a statement at the public meetings on the Airport Security (Parts 107 and 139) and Aircraft Operator Security (Part 108) NPRMs and questions regarding the logistics of the

meetings should be directed to Elizabeth Allen, Federal Aviation Administration, Office of Rulemaking (ARM–100), 800 Independence Avenue, SW, Washington, DC 20591, telephone (202) 267–8199; fax (202) 267–5075.

Questions concerning the NPRM on Airport Security (Parts 107 and 139) should be directed to Penny Anderson, Office of Civil Aviation Security Policy and Planning, Civil Aviation Security Division (ACP–100), Federal Aviation Administration, 800 Independence Ave., SW, Washington, DC 20591; telephone (202) 267–3413.

Questions concerning the NPRM on Aircraft Operator Security (Part 108) should be directed to Rhonda Hatmaker, Office of Civil Aviation Security Policy and Planning Civil Aviation Security Division (ACP–100), Federal Aviation Administration, 800 Independence Ave., SW, Washington, DC 20591; telephone (202) 267–3413.

SUPPLEMENTARY INFORMATION:

Participation at the Public Meetings on the NPRMs

Requests from persons who wish to present oral statements at the public meetings on the Airport Security and/or the aircraft Operator Security proposals should be received by the FAA no later than October 9, 1997, for the Washington, DC meeting and no later than October 16, 1997, for the Fort Worth, TX meeting. Such requests should be submitted to Elizabeth Allen as listed in the section titled **FOR FURTHER INFORMATION CONTACT** and should include a written summary of oral remarks to be presented, the date of the meeting the requester wishes to address, and an estimate of time needed for the presentation. Requests received after the dates specified above will be scheduled if there is time available during the meeting; however, the names of those individuals may not appear on the written agenda. The FAA will prepare an agenda of speakers that will be available at the meetings. To accommodate as many speakers as possible, the amount of time allocated to each speaker may be less than the amount of time requested. Those persons desiring to have available audiovisual equipment should notify the FAA when requesting to be placed on the agenda.

Background

The FAA will conduct two public meetings on the recently published Airport Security (Parts 107 and 139) and Aircraft Operator Security (Part 108) proposed rules.

The notices of proposed rulemaking were published in the **Federal Register** on August 1, 1997 [62 FR 41760 (Parts 107 and 139), and 62 FR 41730 (Part 108)]. The NPRMs proposed to update the overall regulatory structure for airport and air carrier security.

The closing date for comments on these proposals is December 1, 1997. The FAA is planning these meetings to give the public an additional opportunity to comment on these proposed rules.

Persons interested in obtaining a copy of the Airport Security (Parts 107 and 139) and/or the Aircraft Operator Security (Part 108) proposed rules should contact Elizabeth Allen at the address or telephone number provided in **FOR FURTHER INFORMATION CONTACT.**

An electronic copy of these documents may be downloaded using a modem and suitable communications software from the FAA regulations section of the Fedworld electronic bulletin board service (telephone: (703) 321–3339) or the Federal Register's electronic bulletin board service (telephone: (202) 512–1661).

Internet users may reach the FAA's webpage at http://www.faa.gov or the Federal Register's webpage at http://www.access.gpo.gov/su__docs to access recently published rulemaking documents.

Public Meeting Procedures

The following procedures are established to facilitate the public meetings on the NPRMs:

1. There will be no admission fee or other charge to attend or to participate in the public meetings. The meetings will be open to all persons who have requested in advance to present statements, or who register on the day of the meeting (between 8:30 a.m. and 9:00 a.m.) subject to availability of space in the meeting room.

2. The public meetings will adjourn after scheduled speakers have completed their statements.

3. The FAA will try to accommodate all speakers; therefore, it may be necessary to limit the time available for an individual or group.

4. Participants should address their comments to the panel. No individual will be subject to cross-examination by any other participant.

5. Sign and oral interpretation can be made available at the meetings, as well as an assistive listening device, if requested 10 calendar days before the meetings.

6. Representatives of the FAA will conduct the public meetings. A panel of FAA personnel involved in this issue will be present.

7. The meetings will be recorded by a court reporter. A transcript of the meetings and any material accepted by the panel during the meetings will be included in the public dockets [Docket No. 28979 (Parts 107 and 139), and Docket No. 28978 (Part 108)]. Any person who is interested in purchasing a copy of the transcript should contact the court reporter directly. This information will be available at the meetings.

8. The FAA will review and consider all material presented by participants at the public meetings. Position papers or material presenting views or information related to the proposed NPRMs may be accepted at the discretion of the presiding officer and subsequently placed in the public docket. The FAA requests that persons participating in the meetings provide 10 copies of all materials to be presented for distribution to the panel members; others copies may be provided to the audience at the discretion of the participant.

9. Statements made by members of the public meetings panel are intended to facilitate discussion of the issues or to clarify issues. Because the meetings concerning the Airport Security (Parts 107 and 139) and Aircraft Operator Security (Part 108) are being held during the comment period, final decisions concerning issues that the public may raise cannot be made at the meetings. Federal Aviation Administration officials may, however, ask questions to clarify statements made by the public and to ensure a complete and accurate record. Comments made at these public meetings will be considered by the FAA when deliberations begin concerning whether to adopt any or all of the proposed rules.

10. The meetings are designed to solicit public views and more complete information on the proposed rule. Therefore, the meetings will be conducted in an informal and nonadversarial manner.

(49 U.S.C. 106(g), 5103, 40113, 40119, 44701–44702, 44706, 44901–44905, 44907, 44913–44914, 44932, 44935–44936, 46105).

Issued in Washington, DC on September 10, 1997.

Ida Klepper,

Acting Director, Office of Rulemaking.

[FR Doc. 97–24421 Filed 9–12–97; 8:45 am]

BILLING CODE 4910–13–M

POSTAL SERVICE

39 CFR Part 111

Presort Requirements for Periodicals Mail

AGENCY: Postal Service.

ACTION: Proposed Rule.

SUMMARY: The Postal Service plans to add an SCF sack level to the presort requirements for Periodicals automation and nonautomation mailings of nonletter-size pieces. An SCF package level will not be added. Only 5-digit and 3-digit packages will be permitted in the SCF sack. SCF sacks will be prepared after 5-digit and 3-digit sacks, and prior to preparing ADC sacks.

DATES: Comments must be received on or before October 15, 1997.

ADDRESSES: Mail or deliver written comments to the Manager, Mail Preparation and Standards, USPS Headquarters, 475 L'Enfant Plaza SW, Room 6800, Washington, DC 20260–2405. Copies of all written comments will be available at the above address for inspection and photocopying between 9 a.m. and 4 p.m., Monday through Friday.

FOR FURTHER INFORMATION CONTACT: Lynn M. Martin, (202) 268–6351.

SUPPLEMENTARY INFORMATION: On July 1, 1996, the Postal Service eliminated the optional preparation of SCF packages and sacks as part of the streamlining of presort requirements under Classification Reform. Some Periodicals mailers have indicated that they believe that the inability to sack mail to the SCF level has affected the service of their publications. Many mailers of Periodicals publications have been preparing 3-digit sacks that contain fewer than the required 24 pieces, to ensure good levels of service. This results in increased sack usage by mailers and increased sack handlings by the Postal Service. Reinstating SCF sacks would allow Periodicals mailers to direct sacks to the applicable processing plant for service reasons without having to prepare ''skin'' 3-digit sacks, and also provide the opportunity for the Postal Service to receive mail sorted to a finer level than an area distribution center (ADC) sack.

Accordingly, the Postal Service is proposing reinstate, for only non-letter-size Periodicals publications, an SCF sack that would be prepared after all required 5-digit and 3-digit sacks, and prior to preparing required ADC sacks. It is proposed that preparation of the SCF sack would be optional for the period beginning on the date the final rule regarding this notice is published and ending on the effective date of the preparation rules that are placed in effect as a result of the Docket No. R97–1 rate case proceedings. Upon implementation of the preparation rules resulting from the rate case proceedings, it is proposed that preparation of the SCF sack would become mandatory.

Preparation of an SCF package will not be permitted under this planned rule change. An SCF package would increase piece distribution for the Postal Service. Accordingly, SCF sacks would be permitted to contain only 5-digit and 3-digit packages.

For nonautomation rate mailings, mail in SCF sacks would be eligible for the basic per-piece rates. For SCF sacks in automation rate mailings, 5-digit and unique 3-digit packages of 6 or more pieces would qualify for the 3/5 automation rate, and nonunique 3-digit packages as well as 5-digit and 3-digit packages of fewer than 6 pieces would qualify for the basic automation per piece rates.

For the interim period when preparation of SCF sacks will be optional, mailers who choose to prepare SCF sacks must prepare them for each SCF in the mailing for which there are 24 or more pieces of mail prepared in 5-digit and/or 3-digit packages. At the mailer's option SCF sacks may also be prepared that contain fewer pieces (a minimum of one package).

The standard to prepare required origin/optional entry 3-digit sacks will not apply to Periodicals publications for which SCF sacks are prepared. Instead, mailers opting to prepare SCF sacks must prepare required origin/optional entry SCF sacks. At the time SCF sacks become a required level of sortation, the standard to prepare required origin/optional entry 3-digit sacks will be deleted and preparation of required origin/optional entry SCF sacks will become the new standard.

Although exempt from the notice and comment requirements of the Administrative Procedure Act (5 U.S.C. 553(b), (c)) regarding proposed rulemaking by 39 U.S.C. 410(a), the Postal Service invites comments on the following proposed revisions of the Domestic Mail Manual (DMM), incorporated by reference in the Code of Federal Regulations. See 39 CFR part 111.

List of Subjects in 39 CFR Part 111

Postal Service.

PART 111—[AMENDED]

1. The authority citation for 39 CFR part 111 continues to read as follows:

Authority: 5 U.S.C. 552(a); 39 U.S.C. 101, 401, 403, 404, 3001–3011, 3201–3219, 3403–3406, 3621, 3626, 5001.

2. Revise the following sections of the Domestic Mail Manual as set forth below:

M Mail Preparation and Sortation

M000 General Preparation Standards

M010 Mailpieces

M011 Basic Standards

1.0 TERMS AND CONDITIONS

* * * * *

1.2 Presort Levels

[Redesignate current 1.2j through 1.2m as 1.2k through 1.2n respectively; insert new 1.2j to read as follows:]

j. Origin/optional entry SCF: The separation includes packages for one or more 3-digit areas served by the same sectional center facility (SCF) (see L005) in whose service area the mail is verified/entered. Subject to standard, this separation is required regardless of the volume of mail.

* * * * *

1.3 Preparation Instructions

[Redesignate current 1.3j through 1.3p as 1.3k through 1.3q respectively; insert new 1.3j to read as follows:]

j. An origin/optional entry SCF sack contains all 5-digit and 3-digit packages (regardless of quantity) for the SCF in whose service area the mail is verified. At the mailer's option such a sack may be prepared for the SCF area of each entry post office. This presort level applies only to non-letter-size Periodicals prepared in sacks.

* * * * *

M030 Containers

* * * * *

M032 Barcoded Labels

1.0 BASIC STANDARDS—TRAY AND SACK LABELS

* * * * *

1.3 Content Line (Line 2)

[Amend Exhibit 1.3a by inserting the following between 3-digit sacks and ADC sacks for PER Flats—Automation to read as follows:]

Class and mailing	CIN	Human readable content line
PER Flats-Automation		
* *	*	* *
SCF sacks	377	PER FLTS SCF BC
* *	*	* *

[Amend Exhibit 1.3a by inserting the following between 3-digit sacks and ADC sacks for PER Flats—3/5 and Basic to read as follows:]

PER Flats—3/5 and Basic

Class and mailing	CIN	Human readable content line
* * *	*	*
SCF sacks	384	PER FLTS SCF NON BC
* * *	*	*

[Amend Exhibit 1.3a by inserting the following between 3-digit sacks and ADC sacks for NEWS Flats—Automation to read as follows:]

Class and mailing	CIN	Human readable content line
NEWS Flats-Automation		
* * *	*	*
SCF sacks	477	NEWS FLTS SCF BC
* * *	*	*

[Amend Exhibit 1.3a by inserting the following between 3-digit sacks and ADC sacks for NEWS Flats—3/5 and Basic to read as follows:]

NEWS Flats—3/5 and Basic

Class and mailing	CIN	Human readable content line
* * *	*	*
SCF sacks	484	NEWS FLTS SCF NON BC
* * *	*	*

M200 Periodicals (Nonautomation)

1.0 BASIC STANDARDS

* * * * *

1.5 Low-Volume Packages and Sacks

As a general exception to 2.4b through 2.4d and 3.1a through 3.1e, non-letter-size Periodicals may be prepared in packages containing fewer than six pieces, and in sacks containing as few as one such package, when the publisher determines that such preparation improves service. These low-volume packages may be placed on 5-digit, 3-digit, and SCF pallets under M045.

1.6 Optional SCF Sack

Mailers of non-letter-size Periodicals have the option to prepare an SCF sack level. If mailers choose to prepare SCF sacks, they must prepare them for all SCF destinations in the mailing for which there are 24 or more pieces prepared in 5-digit or 3-digit packages, under 3.1. When SCF sacks are prepared, required origin/optional entry 3-digit sacks must not be prepared and required origin/optional entry SCF sacks must be prepared.

3.0 SACK PREPARATION (FLAT-SIZE PIECES AND IRREGULAR PARCELS)

3.1 Sack Preparation

[Redesignate current 3.1e and 3.1f as 3.1f and 3.1g respectively; insert new 3.1e to read as follows:]

Sack size, preparation sequence, and Line 1 labeling:

* * * * *

e. Optional SCF: required at 24 pieces (no minimum for required origin/optional entry SCF), optional with one six-piece package minimum except under 1.5; for Line 1, use L002, Column C.

* * * * *

M820 Flat-Size Mail

1.0 BASIC STANDARDS

* * * * *

1.7 Exception-Periodicals

As a general exception to 3.1a, 3.1b, and 3.2a through 3.2c, Periodicals may be prepared in packages containing fewer than six pieces, and in sacks containing as few as one such package, when the publisher determines that such preparation improves service. These low-volume packages may be placed on 5-digit, 3-digit, and SCF pallets under M045.

1.8 Optional SCF Sack—Periodicals

Mailers of Periodicals have the option to prepare an SCF sack level. If mailers choose to prepare SCF sacks, they must prepare them for all SCF destinations in the mailing for which there are 24 or more pieces prepared in 5-digit or 3-digit packages, under 3.2. When SCF sacks are prepared, required origin/optional entry 3-digit sacks must not be prepared and required origin/optional entry SCF sacks must be prepared.

* * * * *

3.0 PERIODICALS

* * * * *

3.2 Sack Preparation

[Renumber 3.2c and 3.2d as 3.2d and 3.2e respectively; add new 3.1c to read as follows:]

Sack size, preparation sequence, and Line 1 labeling:

* * * * *

c. Optional SCF: required at 24 pieces (no minimum for required origin/optional entry SCF), optional with one six-piece package minimum except under 1.7; for Line 1, use L002, Column C.

* * * * *

An appropriate amendment to 39 CFR 111.3 to reflect these changes will be published if the proposal is adopted.

Stanley F. Mires,

Chief Counsel, Legislative.

[FR Doc. 97–24306 Filed 9–12–97; 8:45 am]

BILLING CODE 7710–12–P

FEDERAL EMERGENCY MANAGEMENT AGENCY

44 CFR Part 67

[Docket No. FEMA–7227]

Proposed Flood Elevation Determinations

AGENCY: Federal Emergency Management Agency, FEMA.

ACTION: Proposed rule.

SUMMARY: Technical information or comments are requested on the proposed base (1% annual chance) flood elevations and proposed base flood elevation modifications for the communities listed below. The base flood elevations are the basis for the floodplain management measures that the community is required either to adopt or to show evidence of being already in effect in order to qualify or remain qualified for participation in the National Flood Insurance Program (NFIP).

DATES: The comment period is ninety (90) days following the second publication of this proposed rule in a newspaper of local circulation in each community.

ADDRESSES: The proposed base flood elevations for each community are available for inspection at the office of the Chief Executive Officer of each community. The respective addresses are listed in the following table.

FOR FURTHER INFORMATION CONTACT: Frederick H. Sharrocks, Jr., Chief, Hazard Identification Branch, Mitigation Directorate, 500 C Street SW., Washington, DC 20472, (202) 646–2796.

SUPPLEMENTARY INFORMATION: The Federal Emergency Management Agency (FEMA or Agency) proposes to make determinations of base flood elevations and modified base flood elevations for each community listed below, in accordance with section 110 of the Flood Disaster Protection Act of 1973, 42 U.S.C. 4104, and 44 CFR 67.4(a).

These proposed base flood and modified base flood elevations, together with the floodplain management criteria

required by 44 CFR 60.3, are the minimum that are required. They should not be construed to mean that the community must change any existing ordinances that are more stringent in their floodplain management requirements. The community may at any time enact stricter requirements of its own, or pursuant to policies established by other Federal, state or regional entities. These proposed elevations are used to meet the floodplain management requirements of the NFIP and are also used to calculate the appropriate flood insurance premium rates for new buildings built after these elevations are made final, and for the contents in these buildings.

National Environmental Policy Act

This proposed rule is categorically excluded from the requirements of 44 CFR Part 10, Environmental Consideration. No environmental impact assessment has been prepared.

Regulatory Flexibility Act.

The Associate Director, Mitigation Directorate, certifies that this proposed rule is exempt from the requirements of the Regulatory Flexibility Act because proposed or modified base flood elevations are required by the Flood Disaster Protection Act of 1973, 42 U.S.C. 4104, and are required to establish and maintain community eligibility in the National Flood Insurance Program. As a result, a regulatory flexibility analysis has not been prepared.

Regulatory Classification

This proposed rule is not a significant regulatory action under the criteria of section 3(f) of Executive Order 12866 of September 30, 1993, Regulatory Planning and Review, 58 FR 51735.

Executive Order 12612, Federalism

This proposed rule involves no policies that have federalism implications under Executive Order 12612, Federalism, dated October 26, 1987.

Executive Order 12778, Civil Justice Reform.

This proposed rule meets the applicable standards of section 2(b)(2) of Executive Order 12778.

List of Subjects in 44 CFR Part 67

Administrative practice and procedure, Flood insurance, Reporting and recordkeeping requirements.

Accordingly, 44 CFR part 67 is proposed to be amended as follows:

PART 67—[AMENDED]

1. The authority citation for part 67 continues to read as follows:

Authority: 42 U.S.C. 4001 et seq.; Reorganization Plan No. 3 of 1978, 3 CFR, 1978 Comp., p. 329; E.O. 12127, 44 FR 19367, 3 CFR, 1979 Comp., p. 376.

§ 67.4 [Amended]

2. The tables published under the authority of § 67.4 are proposed to be amended as follows:

State	City/town/county	Source of flooding	Location	#Depth in feet above ground. *Elevation in feet (NGVD)	
				Existing	Modified
Florida	Stuart (City) Martin County.	St. Lucie River	Approximately 200 feet east of the intersection of U.S. 1 and Fern Avenue.	*6	*10
			Approximately 1500 feet east of the intersection of East Ocean Boulevard and Flamingo Drive.	*6	*7
		North Fork St. Lucie River	Approximately 300 feet east of the intersection of East Ocean Boulevard and Flamingo Drive.	None	*7
			Entire reach within community	*6	*9
		South Fork St. Lucie River	Approximately 300 feet west of the intersection of West 1st Street and Atlanta Avenue.	*6	*9
			Approximately 1000 feet southwest of the intersection of South Carolina Drive and Palm City Avenue.	*6	*7
		Krueger Creek	Approximately 250 feet east of the intersection of East Ocean Boulevard and Krueger Parkway.	*6	*7
		Fraizer Creek	Approximately 50 feet south of the intersection of 7th Street and Colorado Avenue.	*6	*7
		Poppolton Creek	Approximately 300 feet south of the intersection of Federal Highway and Riverview Avenue.	*6	*7
			Approximately 0.4 mile east along Central Parkway from intersection with State Route 76.	None	*7
Maps available for inspection at the Stuart City Hall, City Development Department, 121 S.W. Flagler Avenue, Stuart, Florida. Send comments to Mr. David Collier, Stuart City Manager, 121 S.W. Flagler Avenue, Stuart, Florida 34994.					
Georgia	Towns Country (Unincorporated Areas).	Kirby Branch	At confluence with Fodder Creek	None	*2,009
			Approximately 3,700 feet upstream of Fodder Creek Road.	None	*2,089
		Rocky Branch	At confluence with Fodder Creek	None	*2,066
			Approximately 2,150 feet upstream of Fodder Creek Road.	None	*2,129

State	City/town/county	Source of flooding	Location	#Depth in feet above ground. *Elevation in feet (NGVD)	
				Existing	Modified
		Hiawassee River	At Streakhill Road	None	*1,936
			Approximately 1,000 feet upstream of confluence of Brown Branch.	None	*2,061
		Cynth Creek	At confluence with Hiawassee River	None	*1,945
			Approximately 1.1 miles upstream of confluence with Hiawassee River.	None	*2,038
		Wilson Cave Creek	At confluence with Hog Creek	None	*1,952
			Approximately 3,000 feet upstream of Willshook Road.	None	*2,067
		Bell Creek	At State Route 75	None	*1,935
			At upstream county boundary	None	*2,003
		Fodder Creek	At Fodder Creek Road	None	*1,951
			Approximately 750 feet upstream of confluence with Rocky Branch.	None	*2,076
		Hooper Branch	At confluence with Fodder Creek	None	*1,986
			Approximately 2,700 feet upstream of confluence with Fodder Creek.	None	*2,015
		Brasstown Creek	At downstream county boundary	None	*1,714
			Approximately 300 feet downstream of Plott Town Road.	None	*1,967
		Crooked Creek	At confluence with Brasstown Creek	None	*1,751
			Approximately 1,400 feet upstream of Private Road.	None	*1,830
		Byers Creek	At confluence with Brasstown Creek	None	*1,824
			Approximately 1.04 miles upstream side of Townsend Mill Road.	None	*2,039
		Hog Creek	Approximately 1,100 feet downstream of confluence with Wilson Cove Creek.	None	*1,943
			Approximately 0.96 mile upstream of Barrett Road.	None	*2,024
		Owl Creek	At confluence with Hiawassee River	None	*1,993
			Approximately 2,150 feet upstream side of Owl Creek Road.	None	2,059
		Mill Creek	At confluence with Hiawassee River	None	*2,005
			Approximately 0.97 mile upstream side of State Routes 17 and 75.	None	*2,096
		Tallulah River	Approximately 2.22 miles downstream of county boundary.	None	*2,324
			At upstream county boundary	None	*2,507
Maps available for inspection at the Towns County Office Building, 48 River Street, Suite I, Hiawassee, Georgia.					
Send comments to Mr. Jack Dayton, Commissioner of Towns County, 48 River Street, Suite B, Hiawassee, Georgia 30546.					
Georgia	Young Harris (City)	Tributary to Brasstown Creek.	200 feet downstream of confluence with Brasstown Creek.	None	*1,827
	Towns County		Approximately 625 feet downstream of Reed Street bridge.	*1,835	*1,836
Maps available for inspection at the Young Harris City Hall, 5187 Maple Street, Young Harris, Georgia.					
Send comments to The Honorable Carless Sampson, Mayor of the City of Young Harris, P.O. Box 122, Young Harris, Georgia 30582.					
Illinois	Dixon (City) Lee County.	Plum Creek	Approximately 550 feet downstream of Willett Avenue.	None	*654
			Approximately 525 feet upstream of Galena Avenue.	None	*718
		Unnamed Tributary 1 to Plum Creek.	Approximately 1,400 feet downstream of Galena Avenue.	None	*703
			Approximately 150 feet upstream of Lowell Park Road.	None	*728
Maps available for inspection at the City Hall Building/Zoning Office, 121 West 2nd Street, Dixon, Illinois.					
Send comments to The Honorable Donald Sheets, Mayor of the City of Dixon, 121 West 2nd Street, Dixon, Illinois 61021.					
Illinois	Lee County (Unincorporated Areas).	Unnamed Tributary 1 to Plum Creek.	At confluence with Plum Creek	None	*684
			Approximately 150 feet upstream of Lowell Park Road.	None	*728
		Unnamed Tributary 2 to Plum Creek.	At confluence with Plum Creek	None	*719
			Approximately 120 feet upstream of Country Club Drive.	None	*743

State	City/town/county	Source of flooding	Location	#Depth in feet above ground. *Elevation in feet (NGVD)	
				Existing	Modified
		Plum Creek	Approximately 40 feet upstream of Palmyra Street.	None	*653
			Approximately 100 feet upstream of Timber Creek Road.	None	*740
Maps available for inspection at the Lee County Zoning Office, 112 East 2nd Street, Dixon, Illinois.					
Send comments to Mr. Jim Jones, Lee County Zoning Office, 112 East 2nd Street, Dixon, Illinois 61021.					
Indiana	Ulen (Town) Boone County.	New Reynolds Ditch	Approximately 500 feet downstream	*932	*930
			At Elm Swamp Road	*940	*939
Maps available for inspection at the Ulen Town Office, c/o Steve Million, 141 Ulen Boulevard, Lebanon, Indiana.					
Send comments to Mr. Steve Miller, Ulen Clerk/Treasurer, 141 Ulen Boulevard, Lebanon, Indiana 46052.					
Michigan	Bay De Noc (Township).	Green Bay	Entire shoreline within community	None	*585
	Delta County	Big Bay De Noc	Entire shoreline within community	None	*585
		Little Bay De Noc	Entire shoreline within community	None	*585
Maps available for inspection at the Bay De Noc Township Supervisor's Home Office, 5765 Olson V Point Five Lane, Rapid River, Michigan.					
Send comments to Mr. Robert Olson, Bay De Noc Township Supervisor, 5765 Olson V Point Five Lane, Rapid River, Michigan 49878.					
Michigan	Ensign (Township) Delta County.	Little Bay De Noc	Entire shoreline within community	None	*585
		Big Bay De Noc	Entire shoreline within community	None	*585
Maps available for inspection at the Ensign Township Office, 9332 County 511, West Point Five Road, Rapid River, Michigan.					
Send comments to Mr. John Wolf, Ensign Township Supervisor, 9332 County 511, West Point Five Road, Rapid River, Michigan 49878.					
New York	Henrietta (Town) Monroe County.	East Branch Tributary Red Creek.	Approximately 1,050 feet upstream of confluence with East Branch Red Creek.	*531	*530
			Approximatey 190 feet upstream of State Route 15A.	*571	*575
		South Stem East Branch Tributary Red Creek.	At confluence with East Branch Tributary Red Creek.	*551	*553
			Downstream side of State Route 15A	*573	*576
Maps available for inspection at the Henrietta Town Hall, 475 Calkins Road, Henrietta, New York.					
Send comments to Mr. James R. Breese, Town of Henrietta Supervisor, 475 Calkins Road, Henrietta, New York 14467.					
New York	South Bristol (Town) Ontario County.	Canandaigue Lake	Entire shoreline within community	None	*692
Maps available for inspection at the South Bristol Town Hall, 6500 Gannett Hill Road, Naples, New York.					
Send comments to Mr. Peter Blaisdell, Town of South Bristol Code Enforcement Officer, 6500 Gannett Hill Road, Naples, New York 14512.					
North Carolina	Gaston County (Unincorporated Areas).	Mountain Island Lake	Upstream side of Mountain Island Dam	None	*655
			Approximately 6.3 miles upstream of Mountain Island Dam.	None	*657
Maps available for inspection at the Gaston County Planning/Code Enforcement Office, 212 West Main Avenue, Gastonia, North Carolina.					
Send comments to Mr. Philip L. Hinely, Gaston County Manager, P.O. Box 1578, 212 West Main Avenue, Gastonia, North Carolina 28053–1578.					
North Carolina	Indian Beach (Town) Carteret County.	Atlantic Ocean	Approximately 150 feet south of the intersection of Salterpath Road (State Route 58) and State Route 1192.	None	*13
			Approximatey 700 feet south of the intersection of Salterpath Road (State Route 58) and State Route 1192.	*16	*19
		Bogue Sound	Approximately 0.4 mile west/northwest of the intersection of Salterpath Road (State Route 58) and easternmost corporate limits.	None	*6
			Approximately 0.6 mile north of the intersection of Salterpath Road (State Route 58) and State Route 1192.	*8	*7

State	City/town/county	Source of flooding	Location	#Depth in feet above ground. *Elevation in feet (NGVD)	
				Existing	Modified
Maps available for inspection at the Indian Beach Town Hall, 1400 Salterpath Road, Indian Beach, North Carolina.					
Send comments to The Honorable William L. Fugate, Mayor of the Town of Indian Beach, P.O. Box 306, Salterpath, North Carolina 28575.					
Ohio	Holland (Village) Lucas County.	Maumee Bay	North side of Lakeview Avenue	None	*579
Maps available for inspection at the Harbor View Village Hall, Council Room, 327 Lakeview Drive, Harbor View, Ohio.					
Send comments to The Honorable Linda Sue Byrd, Mayor of the Village of Habor View, 327 Lakeview Drive, P.O. Box 96, Harbor View, Ohio 43434.					
Ohio	Harbor View (Village) Lucas County.	Wolf Creek	Approximately 1,200 feet downstream of Hollaway Road.	None	*617
			Approximatey 700 feet upstream of Hollaway Road.	None	*620
Maps available at the Village of Holland Municipal Building, 1245 Clarion Street, Holland, Ohio.					
Send comments to The Honorable Mile Yunker, Mayor of the Village of Holland, 1245 Clarion Street, Holland, Ohio 43528.					
Ohio	Lucas County (Unincorporated Areas).	Wolf Creek	Approximately 100 feet upstream of Holland-Sylvania Road.	*608	*607
			At confluence of Everett Ditch	*635	*636
			Approximately 50 feet upstream of South Eber Road.	None	*659
		Haefner Ditch	Approximately 680 feet downstream of I–475.	None	*638
			At confluence of Vanderpool Ditch	None	*641
		Hill Ditch	Approximately 450 feet downstream of I–475.	*635	*637
			At Central Avenue	None	*652
		Zaleski Ditch	At confluence with Cairl Ditch	None	*641
			At Whitehouse-Spencer Road	None	*666
		Stone Ditch	Upstream side of Salisbury Road	None	*641
			Approximately 75 feet upstream of Weckerly Road.	None	*648
		Potter Ditch	Upstream side of Derbyshire Road	*635	*636
			Approximately 0.4 mile upstream of McCord Road.	None	*649
		Comstock Ditch	At confluence with Smith Ditch North	None	*669
			Approximately 140 feet upstream of Brint Road.	None	*677
		Smith Ditch North	Approximately 1,150 feet upstream of confluence with Tenmile Creek.	None	*660
			At confluence of Comstock Ditch	None	*669
		Sharp Ditch	At confluence of Comstock Ditch	None	*669
			At Brint Road	None	*677
		Heldman Ditch (East)	Upstream side of Hill Avenue	*636	*635
			Approximately 1,650 feet downstream of Crissey Road.	None	*669
		Schrieber Ditch	Upstream side of Centennial Road	None	*678
			Approximately 0.6 mile upstream of Winterhaven Drive.	None	*685
		Vanderpool Ditch	At the confluence with Haefner Ditch	None	*641
			At King Ditch	None	*658
		Smith Ditch (South)	At the confluence with Hill Ditch	*640	*641
			At King Road	None	*662
		Blystone Ditch	Approximately 1,400 feet upstream of Block Road.	*632	*633
			Downstream side of State Route 64	None	*648
		Swan Creek	Approximately 1,400 feet downstream of Whitehouse-Spencer Road.	*647	*646
			Upstream side of Berkey-Southern Road	None	*648
		Cairl Ditch	At confluence with Wolf Creek	*610	*609
			Approximately 50 feet downstream of Perrysburg-Holland Road.	*610	*609
			Approximately 200 feet downstream of Ohio Turnpike.	None	*639
			Confluence of Zaleski Ditch	None	*641
		Whidden Ditch	At confluence with Maumee River	None	*595
			Approximately 0.4 mile upstream of Norfolk and Western Railway.	None	*642

State	City/town/county	Source of flooding	Location	#Depth in feet above ground. *Elevation in feet (NGVD)	
				Existing	Modified
		Maumee River	Downstream side of Interstate 475	*593	*595
			Aproximately 1.1 miles upstream of Norfolk and Western Railway.	*646	*650
		Maumee Bay	Entire shoreline within the county	None	*579
Maps available for inspection at the Lucas County Engineering Office, One Government Center, Suite 801, Toledo, Ohio.					
Send comments to Ms. Sandy Isenburg, President of the Lucas County Commissioners, One Government Center, Suite 800, Toledo, Ohio 43604.					
Ohio	Sylvania (City) Lucas County.	Schrieber Ditch	Approximately 850 feet downstream of Centennial Road.	*672	*673
			Downstream side of Centennial Road	*677	*676
Maps available for inspection at the City of Sylvania Administration Building/Services Department, 6730 Monroe Street, Suite 101, Sylvania, Ohio.					
Send comments to The Honorable Craig A. Stough, Mayor of the City of Sylvania, 6730 Monroe Street, Sylvania, Ohio 43560.					
Ohio	Toledo (City) Lucas County.	Otter Creek	Upstream side of Taylor Road	None	*585
			Downstream side of Seaman Street	None	*585
		Haefner Ditch	Approximately 330 feet upstream of Holland-Sylvania Road.	*633	*634
			Approximately 0.5 mile upstream of Holland-Sylvania Road.	*637	*638
		Hill Ditch	Upstream side of Elmer Drive	None	*627
			Approximately 600 feet upstream of Orchard Hills Boulevard.	None	*637
		Maumee River	Approximately 0.5 mile downstream of Interstate 75 (Ohio Turnpike).	*579	*580
			Approximately 0.5 mile downstream of Interstate 80/90.	*580	*581
		Delaware Creek	Confluence with Maumee River	*580	*581
			Approximately 30 feet downstream of Rohr Road.	*580	*581
Maps available for inspection at the City of Toledo Division of Building Inspection, One Government Center, Suite 1600, Toledo, Ohio.					
Send comments to The Honorable Carleton Finkbeiner, Mayor of the City of Toledo, One Government Center, Suite 2200, Toledo, Ohio 43604.					
Ohio	Waterville (Village) Lucas County.	Maumee River	Approximately 0.8 mile upstream of Dutch Road.	*605	*607
			Approximately 1.2 miles upstream of Forst Road.	*622	*624
Maps available for inspection at the Waterville Village Hall, 25 North Second Street, Waterville, Ohio.					
Send comments to The Honorable Dave Myerholtz, Mayor of the Village of Waterville, P.O. Box 140, 25 North Second Street, Waterville, Ohio 43566.					
Pennsylvania	Allison (Township) Clinton County.	West Branch Susquehanna River.	At confluence of Sugar Run	*569	*572
			At the upstream corporate limits	*576	*577
		Sugar Run	At confluence with West Branch Susquehanna River.	*569	*572
			Approximately 130 feet upstream of Township Route 398.	*571	*572
Maps available for inspection at the home of the Allison Township Chairman, Glen Road, Mill Hall, Pennsylvania.					
Send comments to Mr. Peter Spangler, Chairman of the Allison Township Board of Supervisors, P.O. Box 185, Mill Hall, Pennsylvania 17751.					
Pennsylvania	Amity (Township) Berks County.	Monocacy Creek	Upstream side of CONRAIL	None	*156
			Approximately 300 feet upstream of Monocacy Hill Road.	None	*156
Maps available for inspection at the Amity Township Municipal Office, 2004 Weavertown Road, Douglassville, Pennsylvania.					
Send comments to Mr. Barry Gross, Chairman of the Township of Amity Board of Supervisors, 2004 Weavertown Road, Douglasville, Pennsylvania 19518.					
Pennsylvania	Exeter (Township) Berks County.	Tributary B to Antietam Creek.	At Exeter Road	None	*390
			Approximately 800 feet downstream of Five Point Road.	None	*538
		Hersters Creek	Upstream side of CONRAIL	None	*169

State	City/town/county	Source of flooding	Location	#Depth in feet above ground. *Elevation in feet (NGVD)	
				Existing	Modified
			Approximately 0.5 mile downstream of U.S. Route 422.	None	*169
Maps available for inspection at the Township of Exeter Engineering Office, 4975 DeMoss Road, Reading, Pennsylvania.					
Send comments to Ms. Linda Buler, Chairperson of the Township of Exeter Board of Supervisors, P.O. Box 4068, Reading, Pennsylvania 19606.					
Pennsylvania	St. Marys (City) Elk County.	Brewery Run	Approximately 25 feet upstream of confluence with Elk Creek.	*1,642	*1,643
			Approximately 150 feet upstream of Hagerty Road.	None	*1,715
Maps available for inspection at the City Hall, 808 South Michael Road, St. Marys, Pennsylvania.					
Send comments to Mr. Ken Gabler, St. Marys City Manager, P.O. Box 1994, 808 South Michael Road, St. Marys, Pennsylvania 15857.					
Tennessee	Chattanooga (City) Hamilton County.	Friar Branch	At confluence with South Chickamauga Creek.	*673	*670
			Approximately 132 feet upstream of Noah Reid Road.	*679	*678
Maps available for inspection at the Chattanooga Planning Commission, Chattanooga City Hall Annex, East 11th Street, Chattanooga, Tennessee.					
Send comments to The Honorable Jon Kinsey, Mayor of the City of Chattanooga, Chattanooga City Hall, Suite 100, East 11th Street, Chattanooga, Tennessee 37402.					
Tennessee	Cocke County (Unincorporated Areas).	Pigeon River	Approximately 1.4 miles downstream of the confluence of Cosby Creek.	*1,110	*1,111
			Approximately 0.35 mile upstream of Wilton Springs Road.	*1,140	*1,139
		Cosby Creek	At confluence with Pigeon River	*1,132	*1,129
			Approximately 70 feet upstream of of Ballpark Road.	*1,326	*1,327
Maps available for inspection at the Cocke Courthouse, 111 Court Avenue, 360 East Main Street, Newport, Tennessee.					
Send comments to Mr. Harold E. Cates, Cocke County Executive, Cocke County Courthouse Annex, Suite 146, 360 East Main Street, Newport, Tennessee 37821.					
Tennessee	Oak Ridge (city) Anderson and Roane Counties.	Emory Valley Creek	Approximately 845 feet downstream of Bay Path Drive.	*798	*799
			Approximately .4 mile upstream of Columbia Drive.	*836	*837
		Brushy Fork Poplar Creek	Approximately 1848 feet downstream of County Road.	None	*795
			Approximately 650 feet upstream of County Road.	None	*798
Maps available for inspection at the Oak Ridge Municipal Building Implementation Development Department, 200 South Tulane Avenue, Oak Ridge, Tennessee.					
Send comments to The Honorable Kathleen Moore, Mayor of the City of Oak Ridge, P.O. Box 1, Oak Ridge, Tennessee 37830.					
Virginia	Richmond (Independent City).	James River	At downstream corporate limits	*28	*27
			At downstream side of Hollywood Dam	*57	*58
		Broad Rock Creek	At confluence with James River	*33	*32
			Approximately 150 feet downstream of Interstate 95.	*33	*32
Send comments to The Honorable Larry E. Chavis, Mayor of the City of Richmond, Richmond City Hall, 900 East Broad Street, Room 201, Richmond, Virginia 23219.					
Maps available for inspection at the Richmond Community Development Department, 900 East Broad Street, Room 110, Richmond, Virginia.					
Wisconsin	Iowa County (Unincorporated Areas).	Wisconsin River	At downstream county boundary	*681	*680
		McKenzie Lake	At upstream county boundary	*733	*731
Maps available for inspection at the Iowa County Zoning Office, 222 North Iowa Street, Dodgeville, Wisconsin.					
Send comments to Mr. Richard Scullion, Chairman of the Iowa County Board of Commissioners, Iowa County Courthouse, 222 North Iowa Street, Dodgeville, Wisconsin 53533.					
Wisconsin	Washburn County (Unincorporated Areas).	Middle McKenzie Lake	Entire shoreline with in community	None	*989

State	City/town/county	Source of flooding	Location	#Depth in feet above ground. *Elevation in feet (NGVD)	
				Existing	Modified
		McKenzie Lake	Entire shoreline within community	None	*990
		Long Lake	Entire shoreline within community	None	*1227
		Mud Lake	Entire shoreline within community	None	*1227

Send comments to Mr. Hubert Smith, Chairman of the Washburn County Board of Supervisors, 10 West 4th Avenue, Shell Lake, Wisconsin 54871.

Maps available for inspection at the Washburn County Zoning Administration, 10 West 4th Avenue, Shell Lake, Wisconsin.

(Catalog of Federal Domestic Assistance No. 83.100, ''Flood Insurance'')

Dated: September 4, 1997.

Michael J. Armstrong,

Associate Director for Mitigation.

[FR Doc. 97–24207 Filed 9–12–97; 8:45 am]

BILLING CODE 6718–04–P

DEPARTMENT OF DEFENSE

48 CFR Parts 204, 212, and 252

[DFARS Case 97–D005]

Defense Federal Acquisition Regulation Supplement; Central Contractor Registration

AGENCY: Department of Defense (DoD).

ACTION: Proposed rule with request for comments.

SUMMARY: The Director of Defense Procurement is proposing to amend the Defense Federal Acquisition Regulation Supplement (DFARS) to require contractor registration in the DoD Central Contractor Registration database prior to award of any contract, basic agreement, basic ordering agreement, or blanket purchase agreement, unless the award results from a solicitation issued on or before March 31, 1998.

DATES: Comment date: Comments on the proposed rule should be submitted in writing to the address shown below on or before November 14, 1997 to be considered in the formulation of the final rule.

ADDRESSES: Interested parties should submit written comments to: Defense Acquisition Regulations Council, Attn: Ms. Sandra G. Haberlin, PDUSD (A&T) DP (DAR), IMD 3D139, 3062 Defense Pentagon, Washington, DC 20301–3062. Telefax number (703) 602–0350.

E-mail comments submitted over the Internet should be addressed to: dfars@acq.osd.mil

Please cite DFARS Case 97–D005 in all correspondence related to this issue. E-mail correspondence should cite DFARS Case 97–D005 in the subject line.

FOR FURTHER INFORMATION CONTACT: Ms. Sandra G. Haberlin, (703) 602–0131.

SUPPLEMENTARY INFORMATION:

A. Background

The President's Executive memorandum, Streamlining Procurement through Electronic Commerce, dated October 26, 1993, directed Federal Government agencies to streamline and simplify procurement through use of electronic commerce. To achieve this goal, the final report, Streamlining Procurement through Electronic Commerce, dated October 13, 1994, was issued to define the Government's electronic commerce architecture and implementation plan. This plan includes centralizing electronic commerce registration; collecting business information, including procurement data, from each contractor into a database at the time of registration; and adopting the Data Universal Numbering System (DUNS) number as the industry-standard Governmentwide company identifier code.

In addition, the Debt Collection Improvement Act of 1996 (Section 31001 of Public Law 104–134) was enacted on April 26, 1996. Subsection 31001(i) amends 31 U.S.C. 7701 by requiring each contractor doing business with the Government to furnish its taxpayer identification number (TIN). Subsection 31001(x) amends 31 U.S.C. 3332 by requiring, with few exceptions, that payments be made by electronic fund transfer (EFT).

This proposed rule requires contractor registration in a DoD Central Contractor Registration (CCR) database prior to award of a contract, basic agreement, basic ordering agreement, or blanket purchase agreement, unless the award results from a solicitation issued on or before March 31, 1998. The rule requires that contractors register on a one-time basis, and confirm on an annual basis that their CCR registration is accurate and complete. The objectives of this rule are (1) to more efficiently comply with Public Law 104–134 by using a central DoD repository to collect statutorily required TINs and EFT information; (2) to simplify and streamline procurement by presenting ''one DoD face to industry,'' and, thereby, eliminating duplicate requirements and processes; and (3) to increase visibility of vendor sources for specific supplies and services.

The following CCR Application Form illustrates the data that contractors will be required to provide in order to register in the CCR:

BILLING CODE 5000–04–M

Central Contractor Registration (CCR) Application

Call 1-888-227-2423 for help on filling out the registration form. This form will facilitate registration on-line at our web site at **http://www.acq.osd.mil/ec. ALL fields on pages 1 and 2 are required unless otherwise noted.** Be sure to keep a copy of the completed form for your records.

GENERAL INFORMATION

__ __ __ __ __ __ __ __ __ + __ __ __ __ __ __ __ __ __

DUNS number[1] **Plus Four** (if applicable) **CAGE Code for address below (OPTIONAL)**[2]

US Federal TIN[3] __ __ - __ __ __ __ __ __ __ OR __ __ __ - __ __ - __ __ __ __

Employer Identification Number (EIN) **Social Security Number (SSN)**

Legal Business Name (Company or Individual Name - Must match TIN) **Doing Business As (if applicable)**

Street Address

Street Address

City **State** **Zip or Postal Code** **Country** **County Name (OPTIONAL)**

Division Name (if applicable) **Division Number (if applicable)**

__ __/__ __/__ __ __ __ __ __/__ __ $ _____.00

Date Business Started (month/day/year) **Accounting Period Closes** (month/day) **Average # of Employees** **Average Annual Revenue** (use 3 year average)

TYPE OF BUSINESS

Corporate Status: (select only one)

- ❑ Sole Proprietorship ❑ Partnership
- ❑ Corporation (Indicate where incorporated: State __ __ OR Country _____)
- ❑ Corporation providing medical & health care services
- ❑ Hospital or extended care facility exempt from taxation

Check all that apply to your company (At least one must be checked)

❑ Tribal government	❑ Educational Institution	❑ 8(a) Program Participant	❑ Minority owned
❑ Research Institute	❑ Municipality	❑ Service Location	❑ Woman owned
❑ Sheltered workshop	❑ Emerging Business / Other unlisted type	❑ Manufacturer	❑ Small Disadvantaged Business
❑ Nonprofit Institution	❑ Construction firm	❑ Surplus dealer	❑ Veteran owned
❑ Historically Black College/University	❑ Federal, State, County, or City Facility	❑ Subgroup	❑ American Indian owned
❑ Foreign Supplier		❑ Labor Surplus Area Firm	❑ Limited Liability Company
		❑ S Corporation	

GOODS & SERVICES

List all SIC codes[4] **that identify your company's specific industry** (at least one code must be entered; codes are either 4 or 8 numeric digits): _____, _____, _____, _____, _____, _____, _____, _____, _____, _____

[1] Data Universal Numbering System - Call Dun & Bradstreet at 1-800-333-0505 or 1 -703-824-8383 if unsure.

[2] Commercial and Government Entity Code - If you do not have a CAGE Code, one will be assigned to you, call DLSC-Defense Logistics Service Center at 1-888-352-9333 if unsure.

[3] Taxpayer Identification Number - Call the IRS at 1-800-829-1040 if unsure. The TIN may be used by the Government to collect and report on any delinquent amounts arising out of the offeror's relationship with the Government (31 U.S.C. 7701 (c) (3)).

[4] Contact your regional PTAC - Procurement Technical Assistance Center to determine your SIC-Standard Industrial Classification codes. Call 1-703-767-1650 to locate your regional PTAC.

FINANCIAL INFORMATION FOR CONTRACT PAYMENT

EFT - Electronic Funds Transfer (call your Financial Institution for assistance)

_____ Financial Institution Name

__ __ __ __ __ __ __ __ __ American Bank Association (ABA) Routing/Transit ID #

__ __ __ __ __ __ __ __ __ __ __ __ __ __ __ __ __ __ Account Number

Type of Account: ❑ Checking ❑ Savings

Lockbox Number (if applicable): __ __ __ __ __ __ __ __ __ __ __ __ __ __ __ __ __ __

Authorization Date: __ __/__ __/__ __ __ __ (month/day/year) (EFT info is valid as of this date. If blank, defaults to date of application.)

ACH (Automated Clearing House) Coordinator for Financial Institution
Minimum of one of the following four must be entered: *(Note: ACH format will be Corporate Trade Exchange (CTX))*

(____)_____-_____ 1. Phone Number

_____ 2. Int'l phone # (if applicable)

(____)_____-_____ 3. Fax Number

_____ 4. Email (if available)

Registrant's Accounts Receivable Point of Contact Information: Name _____

(____)_____-_____ 1. Phone Number

_____ 2. Int'l phone # (if applicable)

(____)_____-_____ 3. Fax Number (Optional)

_____ 4. Email (if available)

Remittance Address for payment statement
Check here to use same address as business address on Page 1 ❑, otherwise, fill out information below:

_____ Remittance Name

_____ Street Address

_____ Street Address

_____ City

__ __ State

_____ Zip or Postal Code

_____ Country

REGISTRATION ACKNOWLEDGMENT

I hereby acknowledge that the information provided is current, accurate, and complete as of the date of this submission.

_____ Print Name

(____) _____- _____ Telephone Number

__ __/__ __/__ __ __ __ Date (month/day/year)

I prefer to receive CCR correspondence through: (select only one)

❑ Fax, my fax # is: (_____) _____- _____

❑ Email, my email address is: _____

❑ Mail, send correspondence to the business address listed on the Page 1

Who else (point of contact) can we contact to answer questions on this form? **Name:** _____ **Telephone #:** (____) _____- _____ (If blank, defaults to Registration Acknowledgment Name)

Thank you for your cooperation.

Revised 07/16/97 Form EZ Page 2 of 2

BILLING CODE 5000–04–C

Instructions for Completion of the Central Contractor Registration (CCR) Application

DoD plans to include the following rules in the CCR registration instructions for contractors when filling out the CCR Application form:

1. *EFT Remittance Address.* For each CCR registration, contractors shall provide only one EFT remittance address. Contractors requiring multiple EFT remittance addresses must establish a separate CCR registration record for each unique EFT remittance address. Contractors may use the same EFT remittance address in more than one CCR registration record.

2. *TINS.* For each CCR registration, Contractors shall provide only one TIN. Contractors with multiple TINs shall establish a separate CCR registration record for each unique TIN. Contractors may use the same TIN in more than one CCR registration record.

3. *Commercial and Government Entity (CAGE) Code.* Each CCR record must have a unique CAGE code; therefore, contractors requiring multiple CAGE codes for the same address will have to annotate the address with a unique attribute. For example, instead of the address: A Company, 1 A Road, Any town, contractors may provide the following addresses for multiple CAGE codes:

CAGE code 1: A Company, 1 A Road, Remit 1, Any town
CAGE code 2: A Company, 1 A Road, Remit 2, Any town
CAGE code 3: A Company, 1 A Road, Remit 3, Any town

4. *DUNS and DUNS+4.*

A. Definitions.

(1) ''Parent business concern'' means a business entity with controlling (more than 50 percent) ownership in another business entity.

(2) ''Subsidiary'' means a business entity with more than 50 percent of its voting stock owned by another business entity.

B. DUNS+4 implementation rules.

(1) A parent business concern must use a DUNS, not a DUNS+4 number, to register in the CCR database.

(2) A parent business concern may identify each subsidiary with either a unique DUNS number or a unique DUNS+4 number, if the subsidiary plans to register in the CCR database separately from the parent business concern and from other subsidiaries.

(3) Only a parent business concern may identify a DUNS+4 for its subsidiaries.

(4) When a parent business concern's registration becomes inactive—

a. The subsidiary's registration, if the subsidiary used a DUNS+4 number to register, becomes inactive; and

b. The DoD registration activity will send a notification to each DUNS+4 identified subsidiary, in addition to the parent business concern, that provides the reasons for deactivation and provides a designated point of contact at the parent business concern.

(5) If a subsidiary registers separately from its parent, the parent business concern will be asked if it wants a single corporate-wide or subsidiary-unique trading partner identification number (unique pass code) generated by each subsidiary's registration.

(End of instructions)

The Department of Defense is also examining alternative ways of obtaining and updating contractor data. In the near term, it may become possible for DoD to use comparable data developed by private sector sources to meet its data needs, and DoD will explore these alternatives throughly.

B. Regulatory Flexibility Act

This proposed rule may have a significant economic impact on a substantial number of small entities within the meaning of the Regulatory Flexibility Act, 5 U.S.C. 601, et seq. An Initial Regulatory Flexibility Analysis (IRFA) has been prepared and is summarized as follows:

This rule proposes to amend the Defense Federal Acquisition Regulation Supplement (DFARS) to require contractor registration in a Central Contractor Registration (CCR) database prior to the award of a contract, basic agreement, basic ordering agreement, or blanket purchase agreement, unless the award results from a solicitation issued on or before March 31, 1998. Subsequent to the initial registration, this rule will require contractors to confirm on an annual basis that their CCR registration is accurate and complete. The objectives of this rule are (1) to more efficiently comply with the Debt Collection Improvement Act of 1996 (Pub. L. 104–134) by using a central repository to collect statutorily required contractors' taxpayer identification numbers (TINs) and electronic funds transfer (EFT) information; (2) to simplify and streamline the procurement process by presenting ''one DoD face to industry,'' and, thereby, eliminating redundant requirements and processes; and (3) to increase visibility of vendor sources for specific supplies and services. Currently, contractors must submit certain business information, including their TIN and DUNS numbers, in response to solicitations. In addition, current regulations require contractors to provide EFT information in compliance with contract terms and conditions. Under current regulations, contractors are required to submit duplicate information to various contracting and payment offices. Under the proposed rule, contractors are required to provide certain business information, including their TINs and EFT information, only once into a common DoD data source. DoD will use this common CCR data source to more efficiently meet the requirements of the Debt Collection Improvement Act of 1996 (Section 31001 of Public Law 104–134). The proposed rule applies to large and small businesses that are awarded DoD contracts, basic agreements, basic ordering agreements, or blanket purchase agreements, unless the award results from a solicitation issued on or before March 31, 1998. This policy applies to all types of awards with the following exceptions: (a) Purchases made with a Governmentwide commercial purchase card; (b) awards made to foreign vendors for work performed outside the United States; (c) classified contracts or purchases; (d) contracts that are awarded by deployed contracting officers in the course of military operations or contracts awarded by contracting officers in the conduct of emergency operations; and (e) purchases to support unusual or compelling needs. To date, no supporting data has been collected; therefore, there is no available estimate of the number of small businesses that will be subject to the rule. Based on DD 350 data, approximately, 23,413 small businesses were awarded contracts of $25,000 or more in fiscal year 1996. It is estimated that a majority of them will be subject to the rule. Information is not available to identify the additional number of small businesses that were awarded contracts of less than $25,000, or were awarded basic agreements, basic ordering agreements, or blanket purchase agreements. All small entities will be subject to the rule unless their contract or agreement falls within one of the five exceptions. Administrative or financial personnel who have general knowledge of the contractor's business, including the contractor's bank account and financial agent, are able to register by providing the pertinent information into the CCR database. The one significant alternative that was considered was to exclude small entities from the requirements of this rule. It was concluded that this alternative would not minimize the economic impact on small entities. Existing

regulations require contractors to submit, with each offer or as a term of each contract, the same information. The proposed rule eliminates these redundant requirements, and their resulting administrative burdens. Therefore, this alternative was rejected.

A copy of the IRFA may be obtained from the address specified herein. Comments are invited from small businesses and other interested parties. Comments from small entities concerning the affected DFARS subparts also will be considered in accordance with 5 U.S.C. 610. Such comments should be submitted separately and should cite DFARS Case 97–D005.

C. Paperwork Reduction Act

The Paperwork Reduction act (44 U.S.C. 3501, *et seq.*) applies, because the proposed rule contains information collection requirements. On June 25, 1997, the Department of Defense, Under Secretary of Defense (Acquisition & Technology) Deputy Under secretary of Defense (Logistics/Electronic Commerce Integration Organization) published a notice and request for comments on the proposed collection for CCR in the **Federal Register** (62 FR 34230).

List of Subjects in 48 CFR Parts 204, 212, and 252

Government procurement.

Michele P. Peterson

Executive Editor, Defense Acquisition Regulations Council.

Therefore, 48 CFR Parts 204, 212, and 252 are proposed to be amended as follows:

1. The authority citation for 48 CFR Parts 204, 212, and 252 continues to read as follows:

Authority: 41 U.S.C. 421 and 48 CFR Chapter 1.

PART 204—ADMINISTRATIVE MATTERS

2. Subpart 204.73 is added to read as follows:

Subpart 204.73—Central Contractor Registration

Sec.
204.7300 Scope.
204.7301 Definitions.
204.7302 Policy.
204.7303 Procedures.
204.7304 Contract clause.

Subpart 204.73—Central Contractor Registration

204.7300 Scope.

This subpart prescribes policies and procedures for requiring contractor registration in the DoD Central Contractor Registration (CCR) database to comply with the Debt Collection Improvement Act of 1996 (31 U.S.C. 3332; 31 U.S.C. 7701), and to increase visibility of vendor sources for specific supplies and services, and their geographical locations.

204.7301 Definitions.

''Central Contractor Registration (CCR) database,'' ''Data Universal Numbering System (DUNS) number,'' ''Data Universal Numbering System+4 (DUNS+4) number,'' and ''Registered in the CCR database'' are defined in the clause at 252.204–700X Required Central Contractor Registration.

204.7302 Policy.

After March 31, 1998, prospective contractors must be registered in the CCR database, prior to award to a contract, basic agreement, basic ordering agreement, or blanket purchase agreement, unless the award results from a solicitation issued on or before March 31, 1998. This policy applies to all types of awards except the following:

(a) Purchases made with a Governmentwide commercial purchase card;

(b) Awards made to foreign vendors for work performed outside the United States;

(c) Classified contracts or purchases (see FAR 4.401);

(d) Contracts awarded by deployed contracting officers in the course of military operation, including, but not limited to, contingency operations as defined in 10 U.S.C. 101(a)(13), or contracts awarded by contracting officers in the conduct of emergency operations, such as responses to natural disasters or national or civil emergencies; and

(e) Purchases to support unusual or compelling needs of the type described in FAR 6.302–2.

204.7303 Procedures.

(a)(1) Except as provided in 204.7302, the contracting officer shall require each offeror to provide a DUNS or, if applicable, a DUNS+4 number, with its verbal or written offer, regardless of the dollar amount of the offer.

(2) Prior to making an award of any contract, basic agreement, basic ordering agreement, or blanket purchase agreement after March 31, 1998, unless the award results from a solicitation issued on or before March 31, 1998, the contracting officer shall verify that the prospective awardee is registered in the CCR database (but see 204.7303(b)). The contracting officer may verify registration using the DUNS number or, if applicable, the DUNS+4 number, by calling 1–888–xxx–xxxx, via the Internet at http://ccr.edi.disa.mil/ccr/cgi–bin/status.pl, or as otherwise provided by agency procedures.

(3) Verification of registration is not required for orders or calls.

(4) After March 31, 1998, as part of the annual review of basic agreement, basic ordering agreement, and blanket purchase agreements, contracting officers shall modify these agreements to incorporate the clause at 252.204–700X, Required Central Contractor Registration.

(b) If the contracting officer determines that a prospective awardee is not registered in the CCR database, the contracting officer shall—

(1) If the needs of the requiring activity allow for a delay, proceed to award after the contractor is registered.

(2) If the needs of the requiring activity do not allow for a delay, proceed to award to the next otherwise successful registered offeror, provided that written approval is obtained at one level above the contracting officer.

(c) Agencies shall protect against improper disclosure of contractor CCR information.

204.7304 Contract clause.

Except as provided in 204.7302, use the clause at 252.204–700X, Required Central Contractor Registration, in—

(a) Solicitation issued after March 31, 1998;

(b) Contracts resulting from solicitations issued after March 31, 1998; and

(c) Basic agreements, basic ordering agreements, and blanket purchase agreements issued after March 31, 1998, unless they resulted from solicitations issued on or before March 31, 1998.

PART 212—ACQUISITION OF COMMERCIAL ITEMS

3. Section 212.301 is amended by adding paragraph (f)(iv) to read as follows:

212.301 Solicitation provisions and contract clauses for the acquisition of commercial items.

(f) * * *

(iv) Use the clause at 252.204–700X, Required Central Contractor Registration, as prescribed in 204.7304.

PART 252—SOLICITATION PROVISIONS AND CONTRACT CLAUSES

4. Section 252.204–700X is added to read as follows:

252.204–700X Required Central Contractor Registration.

As prescribed in 204.7304, use the following clause:

REQUIRED CENTRAL CONTRACTOR REGISTRATION (XXX 19XX)

(a) *Definitions.*

Central Contractor Registration (CCR) database means the primary DoD repository for contractor information required for the conduct of business with DoD.

Data Universal Numbering System (DUNS) number means the 9-digit number assigned by Dun and Bradstreet Information Services to identify unique business entities.

Data Universal Numbering System (DUNS)+4 number means the DUNS number assigned by Dun and Bradstreet plus a 4-digit suffix that may be assigned by a parent (controlling) business concern. This 4-digit suffix may be assigned at the discretion of the parent business concern for such purposes as identifying subunits or affiliates of the parent business concern.

Registered in the CCR database means that all mandatory information, including the DUNS number or the DUNS+4 number, if applicable, and the corresponding Commercial and Government Entity (CAGE) code, is in the CCR database; the DUNS number and the CAGE code have been validated; and all edits have been successfully completed. To remain registered in the CCR database after the initial registration, the Contractor is required to confirm on an annual basis that its CCR registration is still accurate and complete.

(b)(1) By submission of an offer, the offeror acknowledges the requirement that a prospective awardee must be registered in the CCR database prior to award, during performance, and through final payment of any contract resulting from this solicitation except for awards to foreign vendors for work to be performed outside the United States.

(2) The offeror shall provide its DUNS or, if applicable, its DUNS+4 number with its offer, which will be used by the Contracting Officer to verify that the offeror is registered in the CCR database.

(3) Lack of registration in the CCR database will make an offeror ineligible for award.

(4) Since initial registration in the CCR database may take up to 30 days, offerors that are not registered should consider applying for registration immediately upon receipt of this solicitation.

(c) The Contractor is responsible for the accuracy and completeness of the data within the CCR, and for any liability resulting from the Government's reliance on inaccurate or incomplete data. To remain registered in the CCR database after the initial registration, the Contractor is required to confirm on an annual basis that its information in the CCR database is accurate and complete.

(d) Offerors and contractors may obtain information on registration and annual confirmation requirements by calling 1–888–xxx–xxxx or via the Internet at http://ccr.edi.disa.mil.

(End of clause)

[FR Doc. 97–24387 Filed 9–12–97; 8:45 am]

BILLING CODE 5000–04–M

DEPARTMENT OF DEFENSE

48 CFR Part 215

[DFARS Case 97–D025]

Defense Federal Acquisition Regulation Supplement; Weighted Guidelines—Federally Funded Research and Development Centers

AGENCY: Department of Defense (DoD).

ACTION: Proposed rule with request for comments.

SUMMARY: The Director of Defense Procurement is proposing to amend the Defense Federal Acquisition Regulation Supplement (DFARS) to exempt Federally Funded Research and Development Centers from the weighted guidelines method for establishing profit and fee objectives.

DATES: Comment date: Comments on the proposed rule should be submitted in writing to the address shown below on or before November 14, 1997 to be considered in the formulation of the final rule.

ADDRESSES: Interested parties should submit written comments to: Defense Acquisition Regulations Council, Attn: Ms. Amy Williams, PDUSD (A&T) DP (DAR), IMD 3D139, 3062 Defense Pentagon, Washington, DC 20301–3062. Telefax number (703) 602–0350.

E-mail comments submitted over the Internet should be addressed to: dfars@acq.osd.mil

Please cite DFARS Case 97–D025 in all correspondence related to this issue. E-mail correspondence should cite DFARS Case 97–D025 in the subject line.

FOR FURTHER INFORMATION CONTACT: Ms. Amy Williams, (703) 602–0131.

SUPPLEMENTARY INFORMATION:

A. Background

This proposed rule amends DFARS Subpart 215.9 to exempt Federally Funded Research and Development Centers (FFRDCs) from the weighted guidelines method for establishing profit and fee objectives. The fee for an FFRDC is based on assessment of need and, therefore, should not be subject to the structured, risk-based approach embodied in the weighted guidelines method of profit/fee computation. The proposed rule instead requires contracting officers to establish fee objectives for FFRDCs in accordance with FFRDC fee policies in the DoD FFRDC Management Plan.

B. Regulatory Flexibility Act

The proposed rule is not expected to have a significant economic impact on a substantial number of small entities within the meaning of the Regulatory Flexibility Act, 5 U.S.C. 601, et seq., because the rule applies only to contract actions with Federally Funded Research and Development Centers. The rule is not applicable to small businesses. An initial regulatory flexibility analysis has therefore not been prepared. Comments are invited from small businesses and other interested parties. Comments from small entities concerning the affected DFARS subpart also will be considered in accordance with 5 U.S.C. 610. Such comments should be submitted separately and should cite DFARS Case 97–D025 in correspondence.

C. Paperwork Reduction Act

The Paperwork Reduction Act does not apply because the proposed rule does not impose any information collection requirements that require the approval of the Office of Management and Budget under 44 U.S.C. 3501, et seq.

List of Subjects in 48 CFR Part 215

Government procurement.

Michele P. Peterson,

Executive Editor, Defense Acquisition Regulations Council.

Therefore, 48 CFR Part 215 is proposed to be amended as follows:

1. The authority citation for 48 CFR Part 215 continues to read as follows:

Authority: 41 U.S.C. 421 and 48 CFR Chapter 1.

PART 215—CONTRACTING BY NEGOTIATION

2. Section 215.902 is amended by revising the introductory text to read as follows:

215.902 Policy.

Departments and agencies shall use a structured approach for developing a prenegotiation profit or fee objective (profit objective) on any negotiated contract action that requires cost analysis, except on cost-plus-award-fee contracts (see 215.974) or contracts with Federally Funded Research and Development Centers (FFRDCs) (see 215.975). There are three structured approaches—

* * * * *

3. Section 215.903 is amended by revising paragraphs (b)(1) and (b)(2) to read as follows:

215.903 Contracting officer responsibilities.

* * * * *

(b) The contracting officer—

(1) Shall use the weighted guidelines method (see 215.971), unless—

(A) The modified weighted guidelines method applies;

(B) An alternate structured approach is justified;

(C) Developing a fee objective for a cost-plus-award-fee contract; or

(D) Developing a fee objective for a contract with an FFRDC.

(2) Shall use the modified weighted guidelines method (see 215.972) on contract actions with nonprofit organizations, except contract actions with FERDCs;

* * * * *

4. Section 215.972 is amended by revising the section heading and paragraphs (b) and (c), and by removing paragraph (d). The revised text read as follows:

215.972 Modified weighted guidelines method for nonprofit organizations except FFRDCs.

* * * * *

(b) For nonprofit organizations which are entities that have been identified by the Secretary of Defense or a Secretary of a Department as receiving sustaining support on a cost-plus-fixed-fee basis from a particular DoD department or agency, compute a fee objective for covered actions using the weighted guidelines method in 215.971, with the following modifications:

(1) *Modifications to performance risk (Blocks 21–24 of the DD Form 1547.*

(i) If the contracting officer assigns a value from the standard designated range (see 215.971–2(c), reduce the fee objective by an amount equal to 1 percent of the costs in Block 18 of the DD Form 1547. Show the net (reduced) amount on the DD Form 1547.

(ii) If the contracting officer assigns a value from the alternate designated range, reduce the fee objective by an amount equal to 2 percent of the costs in Block 18 of the DD Form 1547. Shown the net (reduced) amount on the DD Form 1547.

(2) *Modifications to contract type risk (Block 25 of the DD Form 1547).* Use a designated range of −1 percent to 0 percent instead of the values in 215.971–3. There is no normal value.

(c) For all other nonprofit organizations except FFRDCs, compute a fee objective for covered actions using the weighted guidelines method in 215.971, modified as described in paragraph (b)(1) of this section.

215.975 [Redesignated]

5. Section 215.975 is redesignated as 215.976.

6. A new section 215.975 is added to read as follows:

215.975 Fee requirements for FFRDCs.

For nonprofit organizations that are FFRDCs, the contracting officer–

(a) Should consider whether any fee is appropriate. Considerations shall include the FFRDC's—

(1) Proportion of retained earnings (as established under generally accepted accounting methods) that relates to DoD contracted effort;

(2) Facilities capital acquisition plans;

(3) Working capital funding as assessed on operating cycle cash needs;

(4) Contingency funding; and

(5) Provision for funding unreimbursed costs deemed ordinary and necessary to the FFRDC.

(b) Shall, when a fee is considered appropriate, establish the fee objective in accordance with FFRDC fee policies in the DoD FFRDC Management Plan.

(c) Shall not use the weighted guidelines method or an alternate structured approach.

[FR Doc. 97–24386 Filed 9–12–97; 8:45 am]

BILLING CODE 5000–04–M

DEPARTMENT OF THE INTERIOR

Fish and Wildlife Service

50 CFR Part 17

RIN 1018–AEOO

Endangered and Threatened Wildlife and Plants; Extension of Comment Period and Notice of Public Hearings on Proposed Rule and Draft Environmental Impact Statement for Grizzly Bear Recovery in the Bitterroot Ecosystem

AGENCY: Fish and Wildlife Service, Interior.

ACTION: Proposed rule; notice of public hearings and extension of comment period.

SUMMARY: The Fish and Wildlife Service (Service) provides notice that public hearings will be held on the proposed rule to establish a nonessential experimental population of grizzly bears in the Bitterroot Ecosystem. Public meetings on the draft EIS for the proposed recovery action will be held concurrently. To accommodate the public hearings, the comment period on the proposal is being extended. All interested parties are invited to submit comments on this proposal.

DATES: Public hearings will be held at the following cities between the hours of 4:00 p.m. to 8:00 p.m. on Wednesday, October 1, 1997, at Challis, Idaho, and Hamilton, Montana; Thursday, October 2, 1997, at Missoula, Montana, and Lewiston, Idaho; Friday, October 3, 1997, at Helena, Montana, and Boise, Idaho; and Wednesday, October 8, 1997, at Salmon, Idaho. Registration will begin 1 hour prior to each hearing. Comments will be accepted until November 1, 1997.

ADDRESSES: The public hearings will be held at the following locations: October 1, 1997—Challis Middle School, 700 Main Street, Challis, Idaho 83226; and City Hall, 223 South 2nd Street, Hamilton, Montana 59840. October 2, 1997—Grant Creek Inn, 5280 Grant Creek Road, Missoula, Montana 59802; and Lewiston Community Center, 1424 Main Street, Lewiston, Idaho 83501. October 3, 1997—Colonial Park Hotel, 2301 Colonial Drive, Helena, Montana 59601; and Boise State University, Student Union Building, 1700 University Drive, Boise, Idaho 83725. October 8, 1997—Pioneer Multipurpose Room, Pioneer School, 900 Sharkey street, Salmon, Idaho 83467. Written comments and materials should be addressed to Dr. Christopher Servheen, U.S. Fish and Wildlife Service Project Leader, Bitterroot Grizzly Bear EIS, P.O. Box 5127, Missoula, Montana 59806.

FOR FURTHER INFORMATION CONTACT: Dr. Christopher Servheen, Grizzly Bear Recovery Coordinator (see **ADDRESSES** above), at telephone (406) 243–4903.

SUPPLEMENTARY INFORMATION:

Background

The U.S. Fish and Wildlife Service (Service) proposes to reintroduce the grizzly bear (*Ursus arctos horribilis*), a threatened species, into east-central Idaho and a portion of western Montana. On July 2, 1997, the Service published a proposed rule (62 FR 35762) to establish a nonessential experimental population pursuant to section 10(j) of the Endangered Species Act of 1973, as amended. Grizzly bear populations have been extirpated from most of the lower 48 United States. They presently occur in populations in the Cabinet/Yaak ecosystem in northwestern Montana and north Idaho, the Selkirk ecosystem in north Idaho and northeastern Washington, the North Cascades ecosystem in northwestern Washington, the Northern Continental Divide ecosystem in Montana, and the Yellowstone ecosystem in Montana, Wyoming, and Idaho. The purpose of this reintroduction is to reestablish a viable grizzly bear population in the Bitterroot ecosystem in east-central Idaho and adjacent areas of Montana, one of six grizzly recovery areas identified in the Grizzly Bear Recovery Plan. Potential effects of this proposed rule are evaluated in a draft

Environmental Impact Statement released concurrently with the publication of the proposed rule. This grizzly bear reintroduction does not conflict with existing or anticipated Federal agency actions or traditional public uses of wilderness areas or surrounding lands.

Public Comments Solicited

The Service has scheduled hearings on October 1, 2, and 3, 1997, with registration beginning 1 hour prior to each hearing (see **DATES** and **ADDRESSES** above). Anyone wishing to make an oral statement for the record is encouraged to provide a written copy of their statement to be presented to the Service at the start of the hearing. In the event that there is a large audience, the time allotted for oral statements may have to be limited.

Oral and written statements concerning the proposed rule will receive equal consideration by the Service. There are no limits to the length of written comments presented at the hearing or mailed to the Service. News releases announcing the date, time, and location of the hearings are being published in newspapers concurrently with this **Federal Register** notice.

The previous comment period on this proposal is scheduled to close on October 9, 1997. To accommodate these hearings, the Service extends the comment period. Written comments may now be submitted until November 1, 1997, to the Service office identified in the **ADDRESSES** section above. All comments must be received before the close of the comment period to be considered.

Author

The author of this notice is Chuck Davis, Regional Environmental Coordinator, U.S. Fish and Wildlife Service, Region 6, P.O. Box 25486, DFC, Denver, CO 80225–0486; telephone 303–236–7400 extension 235.

Authority

The authority for this action is the Endangered Species Act of 1973, as amended (16 U.S.C. 1531 *et seq.*).

Dated: September 8, 1997.

Ralph O. Morgenweck,

Regional Director, Denver, Colorado.

[FR Doc. 97–24337 Filed 9–12–97; 8:45 am]

BILLING CODE 4310–55–M

DEPARTMENT OF COMMERCE

National Oceanic and Atmospheric Administration

50 CFR Part 648

[I.D. 090897E]

New England Fishery Management Council; Meeting

AGENCY: National Marine Fisheries Service (NMFS), National Oceanic and Atmospheric Administration (NOAA), Commerce.

ACTION: Public meeting.

SUMMARY: The New England Fishery Management Council (Council) will hold a 2-day public meeting to consider actions affecting New England fisheries in the exclusive economic zone.

DATES: The meeting will be held on Wednesday, October 1, 1997, at 10 a.m. and on Thursday, October 2, 1997, at 8:30 a.m.

ADDRESSES: The meeting will be held at the Colonial Hilton, 427 Walnut Street (Route 128 South), Wakefield, MA; telephone (781) 245-9300. Requests for special accommodations should be addressed to the New England Fishery Management Council, 5 Broadway, Saugus, MA 01906-1097; telephone: (781) 231-0422.

FOR FURTHER INFORMATION CONTACT: Paul J. Howard, Executive Director, New England Fishery Management Council, (781) 231-0422.

SUPPLEMENTARY INFORMATION:

October 1, 1997

At the recommendation of the Monkfish Committee, the Council may request that the Secretary of Commerce implement interim management measures for the monkfish fishery. The Council also will continue work on the monkfish amendment to the Northeast Multispecies Fishery Management Plan (FMP). Following this discussion, there will be reports from the Council Chairman, Executive Director, NMFS Regional Administrator, Northeast Fisheries Science Center, Mid-Atlantic Fishery Management Council liaisons, and representatives of the Coast Guard and the Atlantic States Marine Fisheries Commission. Groundfish issues to be discussed during the afternoon session include the timetable in the Northeast Multispecies FMP that requires an annual review and evaluation of plan measures. Currently, any modifications or new measures considered necessary to meet the plan objectives must be developed as a framework adjustment to the plan and must be submitted to NMFS by February 1 of each year. There also will be an update on progress to develop whiting management measures.

Prior to adjourning for the day both the Mid-Atlantic Fishery Management Council and the New England Council will hold a joint scoping hearing to solicit comments on the management of spiny dogfish.

October 2, 1997

The morning session will begin with a presentation of the results of the most recent Stock Assessment Workshop, with an advisory on the status of summer flounder, scup, black sea bass, and Gulf of Maine northern shrimp. The Marine Mammal Committee will recommend that the Council endorse its comments on the interim final rule implementing the Large Whale Take Reduction Plan and the proposed rule to implement a take reduction plan for harbor porpoise in the Gulf of Maine. The Scallop Committee will report on its discussions about an alternative approach to the development of Amendment 7 to the Sea Scallop Fishery Management Plan (Sea Scallop FMP). The amendment was initially proposed only to address effort consolidation (transfer of days-at-sea between vessels with sea scallop permits), but may now include a framework adjustment process to open and close areas to enhance scallop conservation as well as revisions to other Sea Scallop FMP provisions so as to be in compliance with the Sustainable Fisheries Act. The Chairman of the Herring Committee will update the Council on the recent scoping hearings and plans for the development of a Herring Fishery Management Plan.

Dr. Pamela Mace, Ocean Fishery Resources Division, NMFS, will provide a briefing on an initiative by the United Nation's Food and Agriculture Organization to address management of fishing capacity, seabird bycatch and mortality in longline fisheries, and shark conservation and management. The Interspecies Committee will recommend approval of measures to eliminate inconsistencies in vessel permit, upgrading, and replacement provisions in different fishery management plans for purposes of preparing a public hearing document. The Chairman also will review the committee's discussion of criteria for exempted fisheries. Finally there will be a report on the measures adopted by Atlantic States Marine Fisheries Commission for inclusion in Amendment 3 to the American Lobster Fishery Management Plan. The Council will adjourn the meeting after the

conclusion of any other outstanding business.

Although other issues not contained in this agenda may come before this Council for discussion, in accordance with the Magnuson-Stevens Fishery Conservation and Management Act, those issues may not be the subject of formal Council action during this meeting. Council action will be restricted to those issues specifically identified in the agenda listed in this notice.

Special Accommodations

This meeting is physically accessible to people with disabilities. Requests for sign language interpretation or other auxiliary aids should be directed to Paul J. Howard (see **ADDRESSES**) at least 5 days prior to the meeting date.

Authority: 16 U.S.C. 1801 *et. seq.*

Dated: September 9, 1997.

Bruce Morehead,

Acting Director, Office of Sustainable Fisheries, National Marine Fisheries Service.

[FR Doc. 97–24410 Filed 9–12–97; 8:45 am]

BILLING CODE 3510–22–F

Notices

Federal Register
Vol. 62, No. 178
Monday, September 15, 1997

This section of the FEDERAL REGISTER contains documents other than rules or proposed rules that are applicable to the public. Notices of hearings and investigations, committee meetings, agency decisions and rulings, delegations of authority, filing of petitions and applications and agency statements of organization and functions are examples of documents appearing in this section.

DEPARTMENT OF AGRICULTURE

Animal and Plant Health Inspection Service

[Docket No. 97–074–1]

Notice of Request for Extension of a Currently Approved Information Collection

AGENCY: Animal and Plant Health Inspection Service, USDA.

ACTION: Extension of approval of an information collection; comment request.

SUMMARY: In accordance with the Paperwork Reduction Act of 1995, this notice announces the Animal and Plant Health Inspection Service's intention to request an extension of approval of an information collection in support of the Acute Porcine Reproductive and Respiratory Syndrome study.

DATES: Comments on this notice must be received by November 14, 1997 to be assured of consideration.

ADDRESSES: Send comments regarding the accuracy of burden estimate, ways to minimize the burden (such as through the use of automated collection techniques or other forms of information technology), or any other aspect of this collection of information to: Docket No. 97–074–1, Regulatory Analysis and Development, PPD, APHIS, suite 3C03, 4700 River Road Unit 118, Riverdale, MD 20737–1238. Please send an original and three copies, and state that your comments refer to Docket 97–074–1. Comments received may be inspected at USDA, room 1141, South Building, 14th Street and Independence Avenue SW., Washington, DC, between 8 a.m. and 4:30 p.m., Monday through Friday, except holidays. Persons wishing to inspect comments are requested to call ahead on (202) 690–2817 to facilitate entry into the comment reading room.

FOR FURTHER INFORMATION: For information regarding Porcine Reproductive and Respiratory Syndrome, contact Dr. Larry White, Veterinary Medical Officer, Emergency Programs Staff, VS, APHIS, 555 S. Howes, Suite 300, Fort Collins, CO 80521, (970) 490–7824. For copies of more detailed information on the information collection, contact Ms. Cheryl Jenkins, Agency Support Service Specialist, at (301) 734–5360.

SUPPLEMENTARY INFORMATION:

Title: Acute Porcine Reproductive and Respiratory Syndrome

OMB Number: 0579–0125.

Expiration Date of Approval: December 31, 1997.

Type of Request: Extension of a currently approved information collection.

Abstract: The mission of the Animal and Plant Health Inspection Service (APHIS), Veterinary Services, is to protect and improve the health, quality, and marketability of our Nation's animals and animal products by preventing, controlling, and monitoring animal diseases. Veterinary Services' Emergency Programs is charged with coordinating APHIS' roles and responsibilities in planning for and responding to emerging or exotic animal diseases.

During the last 12-to-15 months, a severe form of Porcine Reproductive and Respiratory Syndrome (PRRS) has appeared in the United States. It is not known if this is a new emerging pathogen, a more virulent strain of the conventional PRRS virus, or if risk factors have changed resulting in a more severe clinical expression of conventional PRRS virus. Based on information reported by the American Association of Swine Practitioners (AASP) and the National Pork Producers Council (NPPC), approximately 100 herds in 7 States have experienced an episode prior to January 1997, of what APHIS and the swine industry are calling acute PRRS.

Conventional PRRS is an Office International des Epizooties (OIE) List B disease and was first described in the United States in 1987 and reported shortly thereafter in Europe and Asia. Data from the APHIS, Veterinary Services, National Animal Health Monitoring Systems' Swine '95 study showed that 68.5 percent of hog operations had conventional PRRS virus on the premises.

When acute PRRS strikes a producer's herd, the herd experiences immediate and severe production losses. Losses due to abortion as great as 25 percent of the annual pig crop have been reported, with an associated loss of adult breeding animals as great as 5 percent, and preweaning piglet mortality up to 75 percent. Should acute PRRS reach the same level of herd infection as conventional PRRS, producer surplus could decrease by $583 million per year. Consumer surplus could decrease $121 million per year. The price of pork could increase by $15.93 per metric ton. The hog and pork export market is severely threatened by the existence and spread of this undefined pathogen.

Cases of acute PRRS are being reported to Veterinary Services' Emergency Programs Staff. It is imperative that data on management practices and environmental conditions, along with blood and tissue samples, continue to be collected and analyzed during the seasonal episodes. Analysis could identify the transmission mechanism and risk factors and provide a means to prevent disease spread to other herds and States. Information provided by this study would aid in the early control or eradication of acute PRRS and could save millions of dollars of lost production and increased regulatory costs associated with a later control or eradication program.

Samples from herds experiencing high abortion rates will be submitted by private practitioners to seven participating diagnostic laboratories. If the herd for which the samples were submitted qualifies for the study, the diagnostic laboratory will contact the submitting private practitioner. If the private practitioner agrees to participate in the study, he or she will contact the producer. If the producer agrees to participate, the private practitioner and APHIS veterinary medical officer will visit the premises to collect additional data. If the private practitioner or producer chooses not to participate, no further contact will be made.

We are asking the Office of Management and Budget (OMB) to approve the continued use of this information collection activity.

The purpose of this notice is to solicit comments from the public (as well as affected agencies) concerning our information collection. We need this outside input to help us:

(1) Evaluate whether the proposed collection of information is necessary for the proper performance of the functions of the Agency, including whether the information will have practical utility;

(2) Evaluate the accuracy of our estimate of the burden of the proposed collection of information, including the validity of the methodology and assumptions used;

(3) Enhance the quality, utility, and clarity of the information to be collected; and

(4) Minimize the burden of the collection of information on those who are to respond, through use, as appropriate, of automated, electronic, mechanical, and other collection technologies, e.g., permitting electronic submission of responses.

Estimate of Burden: The public reporting burden for this collection of information is estimated to average 1.78 hours per response.

Respondents: Swine producers, veterinary practitioners, State and private diagnostic laboratories, and swine-related industries.

Estimated Number of Respondents: 268.

Estimated Number of Responses Per Respondent: 2.47.

Estimated Annual Number of Responses: 662.

Estimated Total Annual Burden on Respondents: 1,179 hours. (Due to rounding, the total annual burden hours may not equal the product of the annual number of responses multiplied by the average reporting burden per response.)

All responses to this notice will be summarized and included in the request for OMB approval. All comments will also become a matter of public record.

Done in Washington, DC, this 9th day of September 1997.

Craig A. Reed,

Acting Administrator, Animal and Plant Health Inspection Service.

[FR Doc. 97–24391 Filed 9–12–97; 8:45 am]

BILLING CODE 3410–34–P

DEPARTMENT OF AGRICULTURE

Animal and Plant Health Inspection Service

[Docket No. 96–016–23]

Agency Information Collection Activities; OMB Approval Received

AGENCY: Animal and Plant Health Inspection Service, USDA.

ACTION: Notice.

SUMMARY: In accordance with the Paperwork Reduction Act of 1995, this notice announces the Office of Management and Budget's approval of a collection of information contained in the Animal and Plant Health Inspection Service final rule amending the regulations pertaining to compensation for Karnal bunt in the 1995–1996 crop season.

FOR FURTHER INFORMATION CONTACT: Ms. Cheryl Jenkins, APHIS Information Collection Coordinator, AIM, APHIS, suite 2C42, 4700 River Road Unit 103, Riverdale, MD 20737–1235, (301) 734–5360.

SUPPLEMENTARY INFORMATION:

Background

On May 6, 1997, we published in the **Federal Register** (62 FR 24745–24753, Docket No. 96–016–17) a final rule amending the regulations at 7 CFR 301.89, ''Subpart—Karnal Bunt.'' This rule contains information collection requirements. On August 6, 1997, the Office of Management and Budget (OMB) approved the collection of information requirements with respect to this final rule under OMB control number 0579–0121 (expires April 30, 2000).

Done in Washington, DC, this 9th day of September 1997.

Craig A. Reed,

Acting Administrator, Animal and Plant Health Inspection Service.

[FR Doc. 97–24389 Filed 9–12–97; 8:45 am]

BILLING CODE 3410–34–P

DEPARTMENT OF AGRICULTURE

Commodity Credit Corporation

Notice of Request for Extension of a Currently Approved Information Collection

AGENCY: Commodity Credit Corporation, USDA.

ACTION: Notice and request for comments.

SUMMARY: In accordance with the Paperwork Reduction Act of 1995, this notice announces the intention of the Commodity Credit Corporation (CCC) to reduce the number of information collection dockets assigned to CCC by requesting an extension and revision of Office of Management and Budget (OMB) docket number 0560–0052 and consolidate with 0560–0052 those collections cleared under OMB docket number 0560-0009 and 0560–0010. These information collections are authorized by 7 CFR part 1421, Standards for Approval of Warehouses for Grain, Rice, Dry Edible Beans, and Seed, 7 CFR part 1423, Standards for Approval of Dry and Cold Storage Warehouses for Processed Agricultural Commodities, Extracted Honey, and Bulk Oils, and 7 CFR part 1427, Standards for Approval of Warehouses for Cotton or Cotton Linters.

DATES: Comments on this notice must be received on or before November 14, 1997, to be assured consideration.

ADDITIONAL INFORMATION OR COMMENTS: Contact Shirlene Engle, USDA, Farm Service Agency, Warehouse and Inventory Division, Storage Contract Branch, STOP 0553, 1400 Independence Avenue, S.W., Washington, D.C. 20250–0553, (202) 720–7397; e-mail sengle@wdc.fsa.usda.gov.

SUPPLEMENTARY INFORMATION:

Title: Standards for Approval of Warehouses, Reporting and Recordkeeping Requirements.

OMB Control Number: 0560–0052.

Expiration Date: January 31, 1998.

Type of Request: Extension and revision of a currently approved information collection.

Abstract: The information collected under OMB Control Number 0560–0052, as identified above, allows CCC to effectively administer storage agreements authorized by the CCC Charter Act. The information collected allows CCC to contract for warehouse storage and related services and to monitor and enforce all provisions of 7 CFR parts 1421, 1423, and 1427. The forms approved by this information collection are furnished to interested warehouse operators or used by warehouse examiners employed by CCC to secure and record information about the warehouse operator and the warehouse. The information collected is necessary to provide those charged with executing contracts for CCC a basis to determine whether the warehouse and the warehouse operator meet applicable standards for a contract and to determine compliance once the contract is approved.

Estimate of Burden: Public reporting burden for this information collection is estimated to average .7 hours per response.

Respondents: Warehouse Operators.

Estimated Number of Respondents: 3,580.

Estimated Number of Responses per Respondent: 2.3.

Estimated Total Annual Burden on Respondents: 461,400 hours.

Proposed topics for comment include: (a) Whether the continued collection of information is necessary for the proper performance of the functions of the agency, including whether the information will have practical utility; (b) the accuracy of the CCC's estimate of

burden including the validity of the methodology and assumptions used; (c) enhancing the quality, utility, and clarity of the information collected; or (d) minimizing the burden of the collection of the information on those who are to respond, including through the use of appropriate automated, electronic, mechanical, or other technological collection techniques or other forms of information technology. Comments should be sent to the Desk Officer for Agriculture, Office of Information and Regulatory Affairs, Office of Management and Budget, Washington, D.C. 20503, and to Shirlene Engle at the address listed above. All comments will become a matter of public record.

OMB is required to make a decision concerning the collection(s) of information contained in these proposed regulations between 30 and 60 days after publication of this document in the **Federal Register**. Therefore, a comment to OMB is best assured of having its full effect if OMB receives it within 30 days of publication.

Signed at Washington, DC, on September 7, 1997.

Bruce R. Weber,

Acting Executive Vice President, Commodity Credit Corporation.

[FR Doc. 97–24392 Filed 9–12–97; 8:45 am]

BILLING CODE 3410–05–P

DEPARTMENT OF AGRICULTURE

Food Safety and Inspection Service

[Docket No. 97–058 N]

FSIS Recall Public Meeting

AGENCY: Food Safety and Inspection Service.

ACTION: Notice.

SUMMARY: The Food Safety and Inspection Service (FSIS) is holding a public meeting on September 24, 1997. The purpose of the meeting is to discuss with all interested parties Agency policy on recalls of meat, poultry, and egg products, including public notification procedures. Discussions will focus on whether there is a need to change specific aspects of the current policy for handling recalls voluntarily, and on the public health benefits of expanding the Agency's current statutory authorities. FSIS also is interested in receiving suggestions and comments from the public.

DATES: The meeting will be held from 8:30 a.m. to 4:30 p.m. on September 24, 1997.

ADDRESSES: The one-day meeting will be held at the Holiday Inn Rosslyn Westpark Hotel, 1900 North Fort Myer Drive, Arlington, VA 22209.

FOR FURTHER INFORMATION CONTACT: To register for the meeting, please contact Ms. Traci Phebus at (202) 501–7138, or FAX (202) 501–7642. Persons interested in presenting a proposed suggestion are requested to contact Ms. Phebus. Presenters are asked to submit one original and two copies of written comments to: FSIS Docket Clerk, Docket No. 97–058N, Room 102 Cotton Annex Building, 300 12th Street, SW, Washington, DC 20250–3700. Participants who require a sign language interpreter or other special accommodations should contact Ms. Phebus at the above telephone or FAX numbers.

SUPPLEMENTARY INFORMATION: To ensure public health protection throughout the food production and distribution system, FSIS and the States oversee production and distribution of meat, poultry, and egg products not only during processing in officially inspected establishments, but also in distribution channels after the products leave the inspected establishments. When meat, poultry, or egg products in commerce are found to be a health risk to consumers, FSIS asks the firm to coordinate a recall of the products, and the Agency provides appropriate public notification. FSIS verifies the effectiveness of voluntary recalls and ensures that corrective actions are subsequently taken so firms distribute products meeting food safety and other regulatory requirements. If a firm does not agree to initiate a recall, FSIS has authority to detain and seize the product. However, it could take considerable time and effort to determine the distribution channels through which the product has moved and then locate such product. In view of a recent recall of a meat product, FSIS is convening this public forum to solicit public comment and discussion on the Agency's policy.

Directive 8080.1, Revision 2, dated November 3, 1992, details current FSIS practices and procedures for recalls. A limited number of copies will be available at the meeting. Transcripts of the meeting will be available in the FSIS Docket Room.

Done in Washington, DC, on: September 10, 1997.

Thomas J. Billy,

Administrator.

[FR Doc. 97–24437 Filed 9–10–97; 3:46pm]

BILLING CODE 3410–DM–P

DEPARTMENT OF AGRICULTURE

Natural Resources Conservation Service

Middle Deep Red Run Creek Watershed, Tillman, Comanche, and Kiowa Counties, OK

AGENCY: Natural Resources Conservation Service.

ACTION: Notice of availability of record of decision.

SUMMARY: Ronnie L. Clark, responsible Federal official for projects administered under the provisions of Public Law 83–566, 16 U.S.C. 1001–1008, in the State of Oklahoma, is hereby providing notification that a record of decision of proceed with the installation of the Middle Deep Red Run Creek Watershed project is available. Single copies of this record of decision may be obtained from Ronnie L. Clark at the address shown below. For further information contact Ronnie L. Clark, State Conservationist, Natural Resources Conservation Service, 100 USDA, Suite 203, Stillwater, Oklahoma, 74074, telephone (405) 742–1204.

(This activity is listed in the Catalog of Federal Domestic Assistance under No. 10.904, Watershed Protection and Flood Prevention, and is subject to the provisions of Executive Order 12372, which requires intergovernmental consultation with State and local officials.)

Dated: September 4, 1997.

Ronnie L. Clark,

State Conservationist.

[FR Doc. 97–24301 Filed 9–12–97; 8:45 am]

BILLING CODE 3410–16–M

DEPARTMENT OF AGRICULTURE

Natural Resources Conservation Service in Florida

Notice of Proposed Change to Section IV of the Field Office Technical Guide (FOTG) of the Natural Resources Conservation Service in Florida

AGENCY: Natural Resources Conservation Service (NRCS) in Florida, U.S. Department of Agriculture.

ACTION: Notice of availability of proposed changes in Section IV of the FOTG of the NRCS in Florida for review and comment.

SUMMARY: It is the intention of NRCS in Florida to issue the following revised conservation practice standards for Florida: Irrigation System, Subirrigation, (Code 444); Pest Management, (Code 595); Surface Flooding of Organic Soils, (Code 201); Well Decommissioning,

(Code 351); and Well Plugging, (Code 206) in Section IV of the FOTG.

DATES: Comments will be received until October 15, 1997.

FOR FURTHER INFORMATION CONTACT: Inquire in writing to T. Niles Glasgow, State Conservationist, Natural Resources Conservation Service (NRCS), P.O. Box 141510, Gainesville, Florida 32614–1510. Copies of the practice standards will be made available upon written request.

SUPPLEMENTARY INFORMATION: Section 343 of the Federal Agriculture Improvement and Reform Act of 1996 states that revisions made after enactment of the law to NRCS State technical guides used to carry out highly erodible land and wetland provisions of the law shall be made available for public review and comment. For the next 30 days the NRCS in Florida will receive comments relative to the proposed changes. Following that period a determination will be made by the NRCS in Florida regarding disposition of those comments and a final determination of change will be made.

Dated: September 3, 1997.

T. Niles Glasgow,

State Conservationist, Natural Resources Conservation Service, Gainesville, Florida.

[FR Doc. 97–24285 Filed 9–12–97; 8:45 am]

BILLING CODE 3410–16–M

DEPARTMENT OF COMMERCE

Submission For OMB Review; Comment Request

DOC has submitted to the Office of Management and Budget (OMB) for clearance the following proposal for collection of information under the provisions of the Paperwork Reduction Act (44 U.S.C. chapter 35).

Agency: Bureau of the Census.

Title: Service Annual Survey.

Form Number(s): B–500T, B–500T1, B–500T2, B–500T3, B–500T4, B–500T5, B–500T6, B–500M, B–500M1, B–500M2, B–500M3, B–500IT, B–500IM, B–900–L1, B–900–L2, B–900–L3, B–900–L4.

Agency Approval Number: 0607–0422.

Type of Request: Revision of a currently approved collection.

Burden: 13,200 hours.

Number of Respondents: 33,000.

Avg. Hours Per Response: 24 minutes (over all forms).

Needs and Uses: The Service Annual Survey (SAS) provides dollar volume estimates of the total output of personal, business, amusement, social, health, and other professional services in the United States. The Bureau of Economic Analysis (BEA), the primary Federal user, uses the information in developing the national income and product accounts, compiling benchmark and annual input-output tables, and computing gross domestic product by industry. The Bureau of Labor Statistics (BLS) uses the data as input to its Producer Price Indexes and in developing productivity measurements. Other government agencies such as the Health Care Financing Administration (HCFA) use the data for program, planning, and development. The Census Bureau uses these data to provide new insight into changing structural and cost conditions that will directly impact the planning and design of future economic census questionnaires. Private industry uses the data in planning and as a tool for marketing analysis.

Data are collected from all of the largest firms and from a sample of small- and medium-sized businesses, selected using a stratified random sampling procedure. The SAS sample is reselected periodically, generally at 5-year intervals. The largest firms continue to be canvassed when the sample is re-drawn, while nearly all of the small- and medium-sized firms from the old sample are replaced.

In this request, the burden hours are increasing due to the implementation of a new sample drawn for the 1996 survey. We have also expanded coverage to include School and Educational Services (SIC 8299), not elsewhere classified.

Affected Public: Businesses or other for-profit organizations, Not-for-profit institutions.

Frequency: Annually.

Respondent's Obligation: Mandatory.

Legal Authority: Title 13 U.S.C., Sections 182, 224, and 225.

OMB Desk Officer: Jerry Coffey, (202) 395–7314.

Copies of the above information collection proposal can be obtained by calling or writing Linda Engelmeier, DOC Forms Clearance Officer, (202) 482–3272, Department of Commerce, room 5327, 14th and Constitution Avenue, NW, Washington, DC 20230.

Written comments and recommendations for the proposed information collection should be sent within 30 days of publication of this notice to Jerry Coffey, OMB Desk Officer, room 10201, New Executive Office Building, Washington, DC 20503.

Dated: September 8, 1997.

Linda Engelmeier,

Departmental Forms Clearance Officer, Office of Management and Organization.

[FR Doc. 97–24321 Filed 9–12–97; 8:45 am]

BILLING CODE 3510–07–P

DEPARTMENT OF COMMERCE

Submission For OMB Review; Comment Request

DOC has submitted to the Office of Management and Budget (OMB) for clearance the following proposal for collection of information under the provisions of the Paperwork Reduction Act (44 U.S.C. chapter 35).

Agency: Bureau of the Census.

Title: Single Audit Questionnaire.

Form Number(s): SAC–1.

Agency Approval Number: 0607–0518.

Type of Request: Revision of a currently approved collection.

Burden: 4,166 hours.

Number of Respondents: 12,500.

Avg Hours Per Response: 20 minutes.

Needs and Uses: The Single Audit Act Amendments of 1996 and OMB Circular A–133 require state and local governments and non-profit organizations expending $300,000 or more in Federal financial aid to have an annual audit of their financial operations. OMB has designated the Census Bureau as the Federal Audit Clearinghouse for these audits. We use the Single Audit Questionnaire to contact those entities that have not sent in their audit reports to request that they forward the report or clarify their reporting status.

Under the Single Audit Act Amendments of 1996 and OMB Circular A–133, both state and local governments and non-profit institutions are subject to the same requirements. Therefore, it is no longer necessary to maintain two separate forms. We are dropping the SAC–2, previously sent only to non-profit institutions, and are revising upward our estimate of the time necessary to complete form SAC–1 based on the expanded usage of the form.

Under the higher $300,000 reporting threshold imposed by the Single Audit Act Amendments of 1996, fewer entities will be required to submit Single Audits, thus the estimated number of respondents has decreased since OMB last approved this collection.

Periodically, we update information for the Federal Inspector General's offices on governmental and non-profit audits which have been completed or are delinquent. A report listing

governments delinquent in providing audits to the Federal Audit Clearinghouse is provided to the OMB in April as required under the Single Audit Act Amendments of 1996.

Affected Public: State, local or tribal government; Not-for-profit institutions.

Frequency: Annually.

Respondent's Obligation: Voluntary.

Legal Authority: OMB Circular A–133, ''Audits of States, Local Governments, and Non-Profit Organizations''; Single Audit Act Amendments of 1996 (Public Law 104–156).

OMB Desk Officer: Jerry Coffey, (202) 395–7314.

Copies of the above information collection proposal can be obtained by calling or writing Linda Engelmeier, DOC Forms Clearance Officer, (202) 482–3272, Department of Commerce, room 5327, 14th and Constitution Avenue, NW, Washington, DC 20230.

Written comments and recommendations for the proposed information collection should be sent within 30 days of publication of this notice to Jerry Coffey, OMB Desk Officer, room 10201, New Executive Office Building, Washington, DC 20503.

Dated: September 8, 1997.

Linda Engelmeier,

Departmental Forms Clearance Officer, Office of Management and Organization.

[FR Doc. 97–24322 Filed 9–12–97; 8:45 am]

BILLING CODE 3510–07–P

DEPARTMENT OF COMMERCE

Office of the Secretary

Performance Review Board; Membership

The following individuals are eligible to serve on the Performance Review Board in accordance with the Office of the Secretary Senior Executive Service performance appraisal system:

Eileen M. Albanese
Mark E. Brown
Frank W. Deliberti
Ronald P. Hack
Shirl G. Kinney
Clyde W. Robinson, Jr.
Sonya G. Stewart
Kathleen J. Taylor
Paul R. Webber, IV

Anthony J. Calza,

Acting Executive Secretary, Office of the Secretary, Performance Review Board.

[FR Doc. 97–24397 Filed 9–12–97; 8:45 am]

BILLING CODE 3510–BS–M

DEPARTMENT OF COMMERCE

Economic Development Administration

Performance Review Board; Membership

The following individuals are eligible to serve on the Performance Review Board in accordance with the Economic Development Administration Senior Executive Service performance appraisal system:

John E. Corrigan
Wilbur F. Hawkins
John D. Newell
Charles R. Sawyer
Chester J. Straub, Jr.

Anthony J. Calza,

Acting Executive Secretary, Economic Development Administration, Performance Review Board.

[FR Doc. 97–24399 Filed 9–12–97; 8:45 am]

BILLING CODE 3510–BS–M

DEPARTMENT OF COMMERCE

International Trade Administration

[A–122–601]

Brass Sheet and Strip From Canada, Antidumping Duty Administrative Review; Time Limits

AGENCY: Import Administration, International Trade Administration, Department of Commerce.

ACTION: Notice of extension of time limit for preliminary results.

SUMMARY: At the request of the petitioner, the Department of Commerce (the Department) is extending the time limit for the preliminary results of the antidumping duty administrative review of Brass Sheet and Strip from Canada. The review covers one manufacturer/exporter of the subject merchandise to the United States and the period January 1, 1996 to December 31, 1996.

EFFECTIVE DATE: September 15, 1997.

FOR FURTHER INFORMATION CONTACT: Paul M. Stolz or Tom Futtner, Program Manager, Office of Antidumping/Countervailing Duty Enforcement, Import Administration, International Trade Administration, U.S. Department of Commerce, 14th Street and Constitution Avenue, NW., Washington, DC 20230, telephone: (202) 482–4474 or (202) 482–3814 respectively.

SUPPLEMENTARY INFORMATION: Respondent in this review has requested revocation of the antidumping duty order with respect to its shipments of the subject merchandise to the United States. Verification is required. Petitioner has submitted a request for an extension of the deadline for the preliminary results stating that the issue of revocation calls for development of the record and thorough analysis. Petitioner states that it is not practicable to complete the review by the current deadline, October 3, 1997. In this case we agree with the petitioner and have determined that additional time is required to adequately develop the record with respect to revocation and to conduct verification. Thus, in accordance with section 353.22(c)(4) of our regulations, we are extending the time limit for the completion of the preliminary results to January 31, 1998. (*See* Memorandum from Jeffrey P. Bialos to Robert S. LaRussa.) We will issue our final results for this review within 120 days after publication of the preliminary results.

This extension is in accordance with section 751(a)(3)(A) of the Tariff Act of 1930, as amended (19 U.S.C. 1675(a)(3)(A)).

Dated: September 5, 1997.

Jeffrey P. Bialos,

Principal Deputy Assistant Secretary for Import Administration.

[FR Doc. 97–24279 Filed 9–12–97; 8:45 am]

BILLING CODE 3510–DS–M

DEPARTMENT OF COMMERCE

International Trade Administration

[A–423–805]

Cut-to-Length Carbon Steel Plate From Belgium: Preliminary Results of Antidumping Duty Administrative Review

AGENCY: Import Administration, International Trade Administration, Department of Commerce.

ACTION: Notice of preliminary results of antidumping duty administrative review.

SUMMARY: In response to requests from petitioners and respondent, the Department of Commerce (''the Department'') is conducting an administrative review of the antidumping duty order on Cut-to-Length Carbon Steel Plate from Belgium (58 FR 44164). This review covers one manufacturer and exporter of the subject merchandise. The period of review (''POR'') is August 1, 1995 through July 31, 1996.

We preliminarily determine that a *de minimis* dumping margin of 0.22 percent exists for Fabrique de Fer de Charleroi during the POR. Interested parties are invited to comment on these preliminary results. Parties who submit

argument in this proceeding are requested to submit with the argument: (1) A statement of the issue; and (2) a brief summary of the argument.

EFFECTIVE DATE: September 15, 1997.

FOR FURTHER INFORMATION CONTACT: Maureen McPhillips, Enforcement Group III, Office 8, Import Administration, International Trade Administration, U.S. Department of Commerce, 14th Street and Constitution Avenue, NW, Room 7866, Washington, DC 20230; telephone (202) 482–0405.

SUPPLEMENTARY INFORMATION:

Applicable Statute

Unless otherwise indicated, all citations to the statute are references to the provisions effective January 1, 1995, the effective date of the amendments made to the Tariff Act of 1930 (''the Act'') by the Uruguay Round Agreements Act (''URAA''). In addition, unless otherwise indicated, all citations to the Department's regulations are to the current regulations, as amended by the interim regulations published in the **Federal Register** on May 11, 1995 (60 FR 25130).

Background

The Department published an antidumping duty order on Cut-to-Length Carbon Steel Plate from Belgium on August 19, 1993 (58 FR 44164). The Department published a notice of ''Opportunity to Request an Administrative Review'' of the antidumping duty order for the 1995/96 review period on August 12, 1996 (61 FR 41768). On August 20, 1996, respondent Fabrique de Fer de Charleroi, S.A. (''FAFER'') requested that the Department conduct an administrative review of the antidumping duty order on cut-to-length carbon steel plate from Belgium. On August 30, 1996, petitioners (Bethlehem Steel Corporation, U.S. Steel Company (a Unit of USX Corporation), Inland Steel industries, Inc. Geneva Steel, Gulf States Steel Inc. of Alabama, Sharon Steel Corporation, and Lukens Steel Company) requested that the Department conduct an administrative review of this order. We published a notice of initiation of this review on September 17, 1996 *See* 61 FR 48882 (September 17, 1996).

Scope of the Review

The products covered by this administrative review constitute one ''class or kind'' of merchandise: certain cut-to-length carbon steel plate. These products include hot-rolled carbon steel universal mill plates (*i.e.*, flat-rolled products rolled on four faces or in a closed box pass, of a width exceeding 150 millimeters but not exceeding 1,250 millimeters and of a thickness of not less than 4 millimeters, not in coils and without patterns in relief), of rectangular shape, neither clad, plated nor coated with metal, whether or not painted, varnished, or coated with plastics or other nonmetallic substances; and certain hot-rolled carbon steel flat-rolled products in straight lengths, or rectangular shape, hot rolled, neither clad, plated, nor coated with metal, whether or not painted, varnished, or coated with plastics or other nonmetallic substances, 4.75 millimeters or more in thickness and of a width which exceeds 150 millimeters and measures at least twice the thickness, as currently classifiable in the Harmonized Tariff Schedule (HTS) under item numbers 7208.40.3030 7208.40.3060, 7208.51.0030, 7208.51.0045, 7208.51.0060, 7208.52.0000, 7208.53.0000, 7208.90.0000, 7210.70.3000, 7210.90.9000, 7211.13.0000, 7211.14.0030, 7211.14.0045, 7211.90.0000, 7212.40.1000, 7212.40.5000, and 7212.50.0000. Included are flat-rolled products of nonrectangular cross-section where such cross-section is achieved subsequent to the rolling process (*i.e.*, products which have been ''worked after rolling'')—for example, products which have been beveled or rounded at the edges. Excluded is grade X–70 plate. These HTS item numbers are provided for convenience and Customs purposes. The written description remains dispositive.

Verification

As provided in section 782(i)(3) of the Act, we verified information provided by the respondent using standard verification procedures, including on-site inspection of the manufacturer's facilities, the examination of relevant sales and financial records, and selection of original documentation containing relevant information. Our verification results are outlined in the public versions of the verification reports.

Transactions Reviewed

In accordance with section 751 of the Act, the Department determined the constructed export price (CEP) and normal value (NV) of each sale to the first unaffiliated customer in the United States during the POR.

Product Comparisons

In accordance with section 771(16) of the Act, we considered all plate products produced by the respondent, covered by the descriptions in the ''Scope of the Review'' section of this notice, *supra*, and sold in the home market during the POR, to be a foreign like product for purposes of determining appropriate product comparisons to U.S. sales. Where there were no sales of identical merchandise in the home market to compare to U.S. sales, we compared U.S. sales to the next most similar foreign like product on the basis of the characteristics listed in Appendix V of the Department's September 19, 1996, antidumping questionnaire. In making the product comparisons, we matched each foreign like product based on the physical characteristics reported by the respondent and verified by the Department. Where sales were made in the home market on a different weight basis from the U.S. sales (*e.g.*, theoretical versus actual weight), we converted all quantities to the same weight basis, using the conversion factors supplied by the respondent, before making our fair value comparisons.

Fair Value Comparisons

To determine whether sales of cut-to-length carbon steel plate by the respondent to the United States were made at less than fair value, we compared CEP to NV, as described in the ''Constructed Export Price'' and ''Normal Value'' sections of this notice. In accordance with section 77A(d)(2), we calculated monthly weighted average prices for NV and compared these to individual U.S. transactions.

Constructed Export Price (CEP)

We have preliminarily determined the U.S. sales reported as EP sales were CEP sales. Our determination is based on the evidence in the record of this review establishing that U.S. sales were made through an affiliated sales agent in which FAFER has a substantial equity interest and which performed more than clerical functions for the producer/exporter, as detailed in a proprietary memorandum to the file dated May 5, 1997.

Whenever sales are made prior to importation through an affiliated sales agent in the United States, The Department typically determines whether to characterize the sales as EP based upon the following criteria: (1) Whether the merchandise was shipped directly to the unaffiliated buyer, without being introduced into the affiliated selling agent's inventory; (2) whether this procedure is the customary sales channel between the parties; and (3) whether the affiliated selling agent located in the United States acts only as a processor of documentation and a

communication link between the foreign producer and the unrelated buyer. *See, e.g.,* Certain Cut-to-Length Carbon Steel Plate from Germany: Final Results of Antidumping Duty Administrative Review, 62 FR 18389, 18391 (April 15, 1997); Large Newspaper Printing Presses and Components Thereof, Whether Assembled or Unassembled From Germany, 61 FR at 38174, 38175 (July 23, 1996); Certain Corrosion-Resistant Carbon Steel Flat Products From Korea: Final Results of Antidumping Duty Administrative Review, 61 FR 18547, 18551 (April 26, 1996). This test has been approved by the CIT. *Independent Radionic Workers of America* v. *United States,* Slip Op. 95–45 at 2–3 (CIT Mar. 15, 1995); *PQ Corp.* v. *United States,* 652 F. Supp. at 733–35 (CIT 1987).

Applying the first two criteria to the present review, the merchandise was shipped directly to the unaffiliated U.S. customer without being introduced into the agent's inventory. The Department verified that the terms of sale during the POR were CIF to a port of entry near the customer's plant, and that the agent did not take physical possession of the shipment. Moreover, we determined that this procedure was the customary sales channel between the two parties.

Concerning the third criterion, however, the Department has determined that the agent did act as more than a processor of sales documents and a communications link between the unaffiliated U.S. customer and FAFER, the producer in Belgium. Although FAFER sets minimum list prices, its sales agent negotiates the sale with the customer. *See* Verification Exhibit 10. The sales agent essentially negotiates all sales in accordance with FAFER's minimum price list and the sales take place in the United States, not in Belgium.

Because we have determined that the CEP methodology is appropriate, we sought to deduct from CEP the allocated actual selling expenses incurred by the agent, pursuant to section 772(d)(1) (C) and (D). In addition, we adjusted CEP, where appropriate, for all value added in the Untied States, including the proportional amount of profit attributable to the value added, pursuant to section 772(d)(2) and 772(d)(3) of the Act. *See* Final Determination of Sales at Less than Fair Value: Furfuryl Alcohol from South Africa, 60 FR 22550, 22552–53 (1995). In this case, however, respondent did not report indirect selling expenses incurred in either the U.S. or the home market. Therefore, in accordance with section 776(a) of the Act, the Department has deducted from CEP, as the ''facts otherwise available,'' the commission that FAFER paid its agent in connection with the U.S. sales.

We also rejected as unverifiable the interest rate reported by FAFER to calculate imputed credit expenses in the U.S. market, in accordance with section 776(a)(2)(D) of the Act. In its place, as the facts available, we used the average prime rate on short-term business loans in 1996, as reported by the Federal Reserve System.

Normal Value

Based on a comparison of the aggregate quantity of home market and U.S. sales, we determined that the quantity of foreign like product sold in the exporting country was sufficient to permit a proper comparison with the sales of the subject merchandise to the United States, pursuant to section 773(a) of the Act. Therefore, in accordance with section 773(a)(1)(B)(i) of the Act, we based NV on the price at which the foreign like product was first sold to an unaffiliated customer for consumption in the home market, in the usual commercial quantities and in the ordinary course of trade.

We have preliminarily determined that sales of subject merchandise to a Belgian university research center were outside the ordinary course of trade. The relevant statutory provision defines the term ''ordinary course of trade'' as ''the conditions and practices which, for a reasonable time prior to the exportation of the subject merchandise, have been normal in the trade under consideration with respect to merchandise of the same class or kind.'' The statute defines certain sales below cost of production and sales to affiliated parties that are not made at arm's length as sales outside the ordinary course of trade. *See* section 771(15) of the Act. However, the statute does not specify any criteria that the Department should use in determining appropriate ''conditions and practices.''

The purpose of the ordinary course of trade provision is to prevent dumping margins from being based on sales which are not representative of the home market. *See Monsanto Co.* v. *United States,* 698 F. Supp. 275, 278 (CIT 1988). Commerce examines the totality of the facts in each case to determine if sales are being made for ''unusual reasons'' or under ''unusual circumstances.'' Electrolytic Manganese Dioxide from Japan; Final Results of Antidumping Duty Administrative Review, 58 FR 28551, 28552 (1993).

In its Section B response of November 18, 1996, FAFER asked the Department to consider the sales to the university ''separately, as they cannot be deemed part of traditional mercantile operation.'' In making its determination to consider these sales as outside the ordinary course of trade, the Department took into account all facts, including the small number of these sales, the circumstance that these sales were made directly by FAFER, rather than by its sales agent in the home market, the fact that the models were unique during the POR, the fact that the merchandise was intended to be used for research at a welding institute and not for commercial purposes, and the fact that these were unprofitable. During the POR, the overwhelming majority of FAFER's home market sales was made through its affiliated sales agent to industrial end-users.

We have preliminarily determined that one home market customer, a steel service center to which FAFER sells directly, is an affiliated party. This finding is based on common control by the Boël family group within the meaning of section 771(33)(F), as detailed in a proprietary analysis memorandum to the file dated, May 5, 1997.

In regard to affiliated party transactions, the SAA states (quoting the statute):

> The traditional focus on control through stock ownership fails to address adequately modern business arrangements, which often find one firm ''operationally in a position to exercise restraint or direction'' over another even in the absence of an equity relationship. A company may be in a position to exercise restraint or direction, for example, through corporate or family groupings, franchises or joint venture agreements, debt financing, or close supplier relationships in which the supplier or buyer becomes reliant upon the other. SAA at 168 (emphasis added).

In FAFER's response to the Department's original questionnaire FAFER reported all of its customers as unaffiliated. However, information on corporate structure and possible affiliations revealed relationships that led us to examine the possibility that the Boël family exercises control over many business entities, including FAFER and one of its customers, a steel service center. In an effort to determine the nature and extent of the Boël family's control over its numerous affiliations, the Department requested FAFER to supply specific information on the shareholders of its various business associations. To date, FAFER has failed to provide the requested information on the Boël family's shareholdings.

Since this information is critical to our analysis, we have preliminarily determined that the Boël family controls both FAFER and the steel service center. It controls FAFER through the Board of

Directors (three out of five Directors are members of the Boël family) and, as facts otherwise available, controlling equity interests. In addition, FAFER holds shares in a private investment holding company whose Chairman is a member of the Boël family. This investment holding company owns a significant percentage of the shares of one of FAFER's customers, the steel service center. Because FAFER did not provide complete information on its shareholders and the shareholders of several holding companies, as requested by the Department, we preliminarily determine that the Boël family controls FAFER's customer through its board members and, as facts available, controlling equity interests.

Consequently, we ran our arm's length test and found that sales to the affiliated customer were not made at arm's length prices, *i.e.*, at prices comparable to prices at which the respondent sold identical merchandise to unaffiliated customer. Therefore, we did not use these sales in our calculations of the margin.

Based on the Department's previous determination to disregard sales made at below the cost of production (COP) in the original LTFV investigation, we had reasonable grounds to believe or suspect that sales of the foreign like product under consideration for the determination of NV in this review may have been made at prices below the COP, as provided by section 773(b)(2)(A)(i) of the Act. Therefore, pursuant to section 773(b)(1) of the Act, we initiated a COP investigation of sales by FAFER in the home market.

We compared sales of the foreign like product in the home market with the model-specific cost of production figure for the POR. In accordance with section 773(b)(3) of the Act, we calculated the COP based on the sum of the costs of materials and fabrication employed in producing the foreign like product plus selling, general and administrative (SG&A) expenses and all costs and expenses incidental to placing the foreign like product in condition ready for shipment. Based on our verification of the cost responses submitted by FAFER, we adjusted the company's reported COP to reflect certain adjustments to the cost of manufacturing and general and administrative expenses. Specifically, we eliminated the double counting of scrap revenue, adjusted the raw material inputs for certain products to the actual quantities used, added an amount for major repair provisions to fixed overhead, recalculated G&A as a percentage of COM, and corrected several minor data errors.

After calculating COP, we tested whether home market sales of subject merchandise were made at prices below COP and, if so, whether the below-cost sales were made within an extended period of time in substantial quantities. Because each individual price was compared against the average COP during the extended window period, any sales that were below cost were also not at prices which permitted cost recovery within a reasonable period of time. We compared model-specific COPs to the reported home market prices less any applicable movement charges.

Pursuant to section 773(b)(2)(C) of the Act, where less than 20 percent of respondent's sales of a given product were at prices less than COP, we did not disregard any below-cost sales of that product because the below-cost sales were not made in substantial quantities within an extended period of time. Where 20 percent or more of respondent's sales of a given product during the POR were at prices less than the weighted-average COPs for the extended window period, we disregarded the below-cost sales because they were made within an extended period of time in substantial quantities in accordance with sections 773(b)(2) (B) and (C) of the Act, and were at prices which would not permit recovery of all costs within a reasonable period of time in accordance with section 773(b)(2)(D) of the Act. Where we disregarded all contemporaneous sales of a specific product, we calculated NV based on CV.

In accordance with section 773(e) of the Act, we calculated CV based on the sum of respondent's cost of materials, fabrication, SG&A, interest expenses, and profit. In accordance with sections 773(e)(2)(A), we based SG&A and profit on the amounts incurred and realized by the respondent in connection with the production and sale of the foreign like product in the ordinary course of trade, for consumption in the foreign country. For selling expenses, we used the weighted-average home-market selling expenses. Based on our verification of the cost response submitted by FAFER, we adjusted the reported CV to reflect adjustments to COM and G&A, as described in the COP section.

Differences in Levels of Trade

To the extent practicable, we determine normal value based on sales at the same level of trade as the U.S. sales (either EP or CEP). When there are no sales at the same level of trade we compare U.S. sales to home market (or, if appropriate, third country) sales at a different level of trade.

For both EP and CEP, the relevant transaction for level of trade is the sale from the exporter to the importer. While the starting price for CEP is that of a subsequent resale to an unaffiliated buyer, the construction of the EP results in a price that would have been charged if the importer had not been affiliated. We calculate the CEP by removing from the first resale to an independent U.S. customer the expenses under section 772(d) and the profit associated with these expenses. These expenses represent activities undertaken by, or on behalf of, the affiliated importer. Because the expenses deducted under section 772(d) represent selling activities in the United States, the deduction of these expenses normally yields a different level of trade for the CEP than for the later resale which is used for the starting price. Movement charges, duties and taxes deducted under 772(c) do not represent activities of the affiliated importer, and we do not remove them to obtain the level of trade. The NV level of trade is that of the starting price of sales in the home market. When NV is based on constructed value, the level of trade is that of the sales from which we derive SG&A and profit.

To determine whether home market sales are at a different level of trade than U.S. sales, we examine whether the home market sales are at different stages in the marketing process than the U.S. sales. The marketing process in both markets begins with goods being sold by the producer and extends to the sale to the final user, regardless of whether the final user is an individual consumer or an industrial user. The chain of distribution between the producer and final user may have many or few links, and each respondent's sales occur somewhere along this chain. In the United States the respondent's sales are generally to an importer, whether independent or affiliated. We review and compare the distribution systems in the home market and U.S. export markets, including selling functions, class of customer, and the extent and level of selling expenses for each claimed level of trade. Customer categories such as distributor, original equipment manufacturer (OEM), or wholesaler are commonly used by respondents to describe levels of trade but, without substantiation, are insufficient to establish that a claimed level of trade is valid. An analysis of selling functions substantiates or invalidates claimed levels of trade. If the claimed levels are different, the selling functions performed in selling to those levels should also be different.

Conversely, if levels of trade are nominally the same, the selling functions performed should also be the same. Different levels of trade necessarily involve differences in selling functions, but differences in selling functions, even substantial ones, are not alone sufficient to establish a difference in the level of trade. Differences in levels of trade are characterized by purchasers at different places in the chain of distribution and sellers performing qualitatively or quantitatively different functions in selling to them.

When we compare U.S. sales to home market sales at a different level of trade, we make a level-of-trade adjustment if the difference in level of trade affects price comparability. Any effect on price comparability is determined by examining sales at different levels of trade in a single market, the home market. Any price effect must be manifested in a pattern of consistent price differences between home market sales used for comparison and sales at the equivalent level of trade of the export transaction. To quantify the price differences, we calculate the difference in the average of the net prices of the same models sold at different levels of trade. We use the average difference in net prices to adjust the NV when NV is based on a level of trade different from that of the export sale. If there is a pattern of no price differences, then the difference in level of trade does not have a price effect, and no adjustment in necessary.

The statute also provides for an adjustment to NV when NV is based on a level of trade different from that of the CEP, provided the NV level is more remote from the factory than the CEP level, and we are unable to determine whether there is or is not a price effect of different levels of trade in the home market. See section 773(a)(7)(B). This latter situation can occur where there is no home market level of trade equivalent to the U.S. sales level, or where there is an equivalent home market level, but the data are insufficient to support a conclusion on price effect. This adjustment, the CEP offset, is the lower of the two following:

- The indirect selling expenses on the home market sale
- The indirect selling expenses deducted from the starting price used to calculate CEP.

The CEP offset is not automatic each time export price is constructed. We only make a CEP offset when the level of trade of the home market sale is more advanced than the level of trade of the CEP and there is not an appropriate basis for determining whether the different levels of trade affect price comparability.

In our supplemental questionnaire dated October 28, 1996, we asked FAFER to respond to the original questionnaire's inquiry on level of trade. In its November 5, 1996, response, FAFER stated that its selling activities in the U.S. and home markets did not warrant an adjustment related to level of trade. We found no indication at verification that FAFER sells at different levels of trade. Therefore, we made no adjustment.

Currency Conversion

For purposes of the Preliminary results, we made currency conversions based on the official exchange rates in effect on the dates of the U.S. sales as certified by the Federal Reserve Bank of New York. Section 773A(a) directs the Department to use a daily exchange rate in order to convert foreign currencies into U.S. dollars, unless the daily rate involves a ''fluctuation.'' In accordance with the Department's practice, we have determined that a fluctuation exists when the daily exchange rate differs from a benchmark by 2.25 percent. *See, e.g.,* Certain Stainless Steel Wire Rods from France: Preliminary Results of Antidumping Duty Administrative Review (61 FR 8915, 8918—March 6, 1996). The benchmark is defined as the rolling average of rates for the past 40 business days.

Duty Absorption

On October 7, 1996, the petitioners requested, pursuant to section 751(a)(4) of the Act, that the Department determine whether antidumping duties had been absorbed by respondent during the POR. Section 751(a)(4) provides for the Department, if requested, to determine, during an administrative review initiated two years or four years after publication of the order, whether antidumping duties have been absorbed by a foreign producer or exporter subject to the order if the subject merchandise is sold in the United States through an importer who is affiliated with such foreign producer or exporter. Section 751(a)(4) was added to the Act by the URAA. The Department's interim regulations do not address this provision of the Act.

For transition orders as defined in section 751(c)(6)(C) of the Act, *i.e.*, orders in effect as of January 1, 1995, section 351.213(j)(2) of the Department's new antidumping regulations provides that the Department will make a duty-absorption determination, if requested, in any administrative review initiated in 1996 or 1998. *See* 19 CFR § 351.213(j)(2), 62 FR 27394 (May 19, 1997). While the new regulations are not binding on the Department in the instant reviews, which were initiated under the interim regulations, they nevertheless serve as a statement of departmental policy. Because the order on cut-to-length carbon steel plate from Belgium has been in effect since 1993, it is a transition order in accordance with section 751(c)(6)(C) of the Act. Since this review was initiated in 1996 and a request for a duty-absorption inquiry was made, the Department will undertake a duty-absorption inquiry as part of this administrative review.

The Act provides for a determination on duty absorption if the subject merchandise is sold in the United States through an affiliated importer. In this case, the reviewed firm sold through an importer that is ''affiliated'' within the meaning of section 751(a)(4) of the Act. Furthermore, we have preliminarily determined that there is a dumping margin on one hundred percent of FAFER's sales. In addition, we cannot conclude from the record that the unaffiliated purchaser in the United States will pay the ultimate assessed duty. Therefore, under these circumstances, we preliminarily find that antidumping duties have been absorbed by FAFER on one hundred percent of its U.S. sales. If interested parties wish to submit evidence that the unaffiliated purchasers in the United States will pay any ultimately assessed duty charged to affiliated importers, they must do so no later than 15 days after publication of these preliminary results. This information would be considered by the Department if we determine in our final results that there are dumping margins on certain U.S. sales.

Preliminary Results of the Review

As a result of this review, we preliminarily determine that the following dumping margin exists:

Manufacturer/exporter	Period of review	Margin (percent)
Fabrique de Fer de Charleroi	8/1/95–7/31/96	0.22

Parties to this proceeding may request disclosure within five days of publication of this notice and any interested party may request a hearing within 10 days of publication. Any hearing, if requested, will be held 44 days after the date of publication, or the first working day thereafter. Interested parties may submit case briefs and/or written comments no later than 30 days after the date of publication. Rebuttal briefs and rebuttals to written comments, limited to issues raised in such briefs or comments, may be filed no later than 37 days after the date of publication of this notice. The Department will publish a notice of the final results of the administrative review, including its analysis of issues raised in any written comments or at a hearing, not later than 120 days after the date of publication of this notice.

Cash Deposit

The following deposit requirements will be effective upon completion of the final results of this administrative review for all shipments of cut-to-length carbon steel plate form Belgium entered, or withdrawn from warehouse, for consumption on or after the publication date of the final results of this administrative review, as provided by section 751(a) of the Act: (1) The cash deposit rate for the reviewed company will be the rate established in the final results of this administrative review; (2) for exporters not covered in this review, but covered in the LTFV investigation, the cash deposit rate will continue to be the company-specific rate published from the LTFV investigation; (3) if the exporter is not a firm covered in this review, or the original LTFV, but the manufacturer is, the cash deposit rate will be the rate established for the most recent period for the manufacturer of the merchandise; and (4) the cash deposit rate for all other manufacturers or exporters will continue to be 6.84 percent, the ''all others'' rate made effective by the LTFV investigation. These deposit requirements, when imposed, shall remain if effect until publication of the final results of the next administrative review.

This notice serves as a preliminary reminder to importers of their responsibility under 19 CFR § 353.26 to file a certificate regarding the reimbursement of antidumping duties prior to liquidation of the relevant entries during this review period. Failure to comply with this requirement could result in the Secretary's presumption that reimbursement of antidumping duties occurred and the subsequent assessment of double antidumping duties.

This administrative review and notice are in accordance with section 751(a)(1) of the Act (19 U.S.C. § 1675(a)(1)) and 19 CFR § 353.22.

Dated: September 2, 1997.

Robert S. LaRussa,

Assistant Secretary for Import Administration.

[FR Doc. 97–24278 Filed 9–12–97; 8:45 am]

BILLING CODE 3510–DS–M

DEPARTMENT OF COMMERCE

International Trade Administration

[A–351–820]

Ferrosilicon From Brazil: Extension of Time Limits of Antidumping Duty Administrative Review

AGENCY: Import Administration, International Trade Administration, Department of Commerce.

ACTION: Notice of extension of time limits of antidumping duty administrative review.

SUMMARY: The Department of Commerce (the Department) is extending the time limits for the preliminary results in the administrative review of the antidumping duty order on ferrosilicon from Brazil, covering the period March 1, 1996 through February 28, 1997.

EFFECTIVE DATE: September 15, 1997.

FOR FURTHER INFORMATION CONTACT: Sal Tauhidi or Irene Darzenta, Office of Antidumping/Countervailing Duty Enforcement, Import Administration, International Trade Administration, U.S. Department of Commerce, 14th & Constitution Avenue, NW. Washington, DC 20230; telephone: (202) 482–4851 or (202) 482–6320.

SUPPLEMENTARY INFORMATION: On April 24, 1997, the Department initiated the administrative review of the antidumping duty order on ferrosilion from Brazil. The current time limits are December 1, 1997 for the preliminary results and April 2, 1998 for the final results. Because it is not practicable to complete this review within the original time limits as mandated by section 751(a)(3)(A) of the Tariff Act of 1930 (as amended by the Uruguay Round Agreements Act), the Department is extending the time limits for the preliminary results to January 12, 1997. (See Memorandum to Robert S. LaRussa, *Postponement of Preliminary Results of the Administrative Review on Ferrosilicon from Brazil,* September 2, 1997.) Accordingly, we will issue the final results within 120 days from the date of publication of the preliminary results.

These extensions are in accordance with section 751(a)(3)(A) of the Act.

Dated: September 8, 1997.

Jeffrey P. Bialos,

Principal Deputy Assistant Secretary for Import Administration.

[FR Doc. 97–24277 Filed 9–12–97; 8:45 am]

BILLING CODE 3510–DS–M

DEPARTMENT OF COMMERCE

International Trade Administration

[A–570–848]

Notice of Amendment to Final Determination of Sales at Less Than Fair Value and Antidumping Duty Order: Freshwater Crawfish Tail Meat From the People's Republic of China

AGENCY: International Trade Administration, Import Administration, Department of Commerce

EFFECTIVE DATE: (September 15, 1997.)

FOR FURTHER INFORMATION CONTACT: Elisabeth Urfer, Rebecca Trainor, or Maureen Flannery, AD/CVD Enforcement, Import Administration, International Trade Administration, U.S. Department of Commerce, 14th Street and Constitution Avenue, N.W., Washington D.C. 20230; telephone: (202) 482–0780, (202) 482–0666, or (202) 482–3020, respectively.

Applicable Statute and Regulations

Unless otherwise indicated, all citations to the statute are references to the provisions effective January 1, 1995, the effective date of the amendments made to the Tariff Act of 1930 (the Act) by the Uruguay Round Agreements Act. In addition, unless otherwise indicated, all citations to the Department's regulations are to the regulations as codified at 19 CFR Part 353 (April 1, 1997).

Case History and Amendment of the Final Determination

On August 1, 1997, the Department of Commerce (the Department) published in the **Federal Register** (62 FR 41347) the final determination of its sales-at-less-than-fair-value (LTFV) investigation of freshwater crawfish tail meat (crawfish tail meat) from the People's Republic of China (PRC). The investigation covered the period March 1, 1996 through August 31, 1996. We are amending the final determination to correct ministerial errors made in the list of exporters receiving weighted-average dumping margins. In the final determination, we inadvertently included Anhui Cereals, Oils and Foodstuffs Import and Export

Corporation (Anhui) in the list of exporters receiving weighted-average dumping margins. In the investigation we had determined that Anhui had no shipments of subject merchandise during the POI, and therefore should receive the China-Wide rate. In addition, in the final determination, we inadvertently excluded Huaiyin Ningtai Fisheries Co., Ltd. (Huayin Ningtai) from the list of exporters receiving weighted-average dumping margins, even though Huayin Ningtai had participated in this proceeding and is entitled to the rate for participating, non-selected respondents. The corrected list of manufacturers/exporters receiving weighted-average dumping margins is in the ''Antidumping Duty Order'' section below. We are publishing this amendment to the final determination in accordance with 19 CFR 353.28(c).

Scope of the Order

The product covered by this investigation and order is freshwater crawfish tail meat, in all its forms (whether washed or with fat on, whether purged or unpurged), grades, and sizes; whether frozen, fresh, or chilled; and regardless of how it is packed, preserved, or prepared. Excluded from the scope of the investigation and order are live crawfish and other whole crawfish, whether boiled, frozen, fresh, or chilled. Also excluded are saltwater crawfish of any type, and parts thereof. Freshwater crawfish tail meat is currently classifiable in the Harmonized Tariff Schedule of the United States (HTS) under item numbers 0306.19.00.10 and 0306.29.00.00. The HTS subheadings are provided for convenience and Customs purposes only. The written description of the scope of this proceeding is dispositive.

Antidumping Duty Order

On September 8, 1997, in accordance with section 735(d) of the Act, the U.S. International Trade Commission (ITC) notified the Department that a U.S. industry is materially injured by reason of imports of crawfish tail meat from the PRC, pursuant to section 735(b)(1)(A) of the Act. Therefore, in accordance with section 736(a)(1) of the Act, the Department will direct the United States Customs Service to assess, upon further advice by the Department, antidumping duties equal to the amount by which the normal value of the merchandise exceeds the export price of the merchandise for all relevant entries of crawfish tail meat from the PRC. These antidumping duties will be assessed on all unliquidated entries of crawfish tail meat from the PRC entered, or withdrawn from warehouse, for consumption on or after March 26, 1997, the date on which the Department published its preliminary determination notice in the **Federal Register** (62 FR 14392).

On or after the date of publication of this notice in the **Federal Register**, U.S. Customs officers must require, at the same time as importers would normally deposit estimated duties, the cash deposits listed below for the subject merchandise. The ''China-wide'' rate applies to all exporters of crawfish tail meat not specifically listed below.

The ad valorem weighted-average dumping margins are as follows:

Manufacturer/producer/exporter	Weight-average margin percentage
China Everbright Trading Company	156.77
Binzhou Prefecture Foodstuffs Import & Export Corp.	119.39
Huaiyin Foreign Trade Corp.	91.50
Yancheng Foreign Trade Corp.	108.05
Jiangsu Cereals, Oils & Foodstuffs Import & Export Corp.	[1] 122.92
Yancheng Baolong Aquatic Foods Co., Ltd.	[1] 122.92
Huaiyin Ningtai Fisheries Co., Ltd.	[1] 122.92
Nantong Delu Aquatic Food Co., Ltd.	[1] 122.92
China-wide Rate	201.63

[1] Rate is based on the weighted-average of calculated rates that are not zero or based on facts available.

This notice constitutes the antidumping duty order with respect to crawfish tail meat from the PRC, pursuant to section 736(a) of the Act. Interested parties may contact the Central Records Unit, Room B–099 of the Main Commerce Building, for copies of an updated list of antidumping duty orders currently in effect.

This order is published in accordance with section 736(a) of the Act and 19 CFR 353.21.

Dated: September 10, 1997.

Jeffrey P. Bialos,

Acting Assistant Secretary for Import Administration.

[FR Doc. 97–24465 Filed 9–12–97; 8:45 am]

BILLING CODE 3510–DS–P

DEPARTMENT OF COMMERCE

International Trade Administration

[Docket No. 970910230–7230–01]

Cooperative Agreement Program for American Business Centers in Russia and the New Independent States

AGENCY: International Trade Administration, Commerce.

ACTION: Notice.

SUMMARY: The International Trade Administration (ITA) is soliciting competitive applications to establish and operate American Business Centers (ABCs)in five Russian cities for a two (2) year multi-year award period. ABCs will encourage the export of U.S. goods and services and stimulate trade and investment in Russia's regions. Funds to support new ABC Awards are not currently available. All awards resulting from this announcement are contingent upon the availability of appropriated funds.

ABCs will provide, on a user fee basis, a broad range of business development and facilitation services to United States companies in Russia's regions. Services provided by the ABCs will be designed to encourage more U.S. firms to explore opportunities for trade and investment in Russia's regions and to help them conduct business there more effectively. The core services to be provided by the ABCs include: International telephone, fax, and data transmission; temporary office space; space for meetings, small seminars, and small product exhibitions or demonstrations; secretarial support (e.g. word processing, typing, message taking); translator/interpreters; photocopying; market research; counseling on local business conditions; and arranging appointments with Russian business contacts. The Centers also will work closely with Russian businesses to help them become more attractive trading partners; identify and report obstacles to trade and investment; and serve as a link between financial institutions, U.S. companies, and Russian enterprises.

In addition to these core services, ABCs will support U.S. Government activities under the Regional Investment Initiative (RII). This will include providing, at cost, support for the activities of the RII coordinators. Such support may include office space, computers, telecommunications equipment and secretarial and translation services.

Projects supported under the terms of this notice will establish and operate an ABC in no less than one of the following Russian cities: Khabarovsk, Nizhny

Novgorod, Novosibirsk, Yekaterinburg, and Yuzhno-Sakhalinsk.

DATES: ITA will accept only those applications which are received at the U.S. Department of Commerce, Room 1235, HCHB, no later than 3:00 pm E.S.T. October 15, 1997. Late applications will not be accepted and will not be considered. On September 19, 1997 competitive application kits are available from the Department of Commerce.

ADDRESSES: To obtain a copy of the application kit, please send a written request with a self-addressed mail label to: Russia-NIS Program Office, U.S. & Foreign Commercial Service, Room 1235, HCHB, U.S. Department of Commerce, Washington, D.C. 20230. Requests for application kits also may be faxed to 202–482–2456. Only one application kit will be provided to each organization requesting it, but the kit may be reproduced by the requester. All forms necessary to submit an application will be included in the application kit. Completed applications should be returned to the same address. Applicants must submit a signed original and two copies of the application and supporting materials. It is anticipated that it will take ten weeks after the deadline for receipt of applications to process applications and make awards.

FOR FURTHER INFORMATION CONTACT: Applicants wishing further information should contact Ms. E. Vivian Spathopoulos, Deputy Director, Russia-NIS Program Office, U.S. & Foreign Commercial Service, U.S. Department of Commerce, room 1235, HCHB, Washington, D.C. 20230, telephone: (202) 482–2902, or Fax: (202) 482–2456.

SUPPLEMENTARY INFORMATION:

Program Authority

The American Business Center program is authorized by Title III of the ''Freedom for Russia and Emerging Eurasian Democracies and Open Markets Support Act of 1992'' or the ''FREEDOM Support Act'', Public Law 102–511. Funding for the program is provided by the Agency for International Development under Section 632(a) of the Foreign Assistance Act of 1961, as amended.

Eligible Applicants

United States for-profit firms, non-profit organizations, non-Federal government agencies, industry and trade associations, and educational institutions are eligible to apply. An enterprise which includes or intends to include participation of host country citizens or entities will be considered an eligible applicant so long as the applicant is and will remain, throughout the award period, controlled by citizens or entities of the United States.

Funding Guidelines

Since it is anticipated that ITA will be involved in the implementation of each project for which an award is made, the funding instrument for the program will be a cooperative agreement. Examples of ITA involvement include but are not limited to the following: Supplemental marketing to promote the ABCs, guidance on eligibility of ABC clients, and coordination with other U.S. government assistance programs.

ITA anticipates $1 million will be available for the first year of funding for up to five (5) multi-year cooperative agreement awards during FY 1998. Applicants will be requested to submit a work-plan and budget which cover a one (1) year period for a total amount of not more than $200,000 in Federal funds. Applicants must supply at least fifty-percent (50%) of total project costs, with the Federal portion of total project costs to be no more than fifty-percent (50%). A minimum of one half (½) of the support supplied by the applicant must be in the form of cash. The remaining portion of the applicant's support may consist of cash or in-kind contributions (good and services contributed by a third-party). Applicants will be requested to submit a work-plan and budget for a second year of operation based on the level of funding for the first year with the understanding that funding levels may or may not be the same as the first year.

Applicant receipt of future funding is contingent upon the availability of appropriated funds, and satisfactory performance, and will be at the sole discretion of ITA. Publication of this notice does not constitute an obligation by the Department of Commerce to enter into a cooperative agreement with any responding applicant.

Eligible entities may propose the establishment of one or more ABCs. Applicants must submit a separate application for each proposed ABC. Each ABC will be funded through a separate cooperative agreement. More than one cooperative agreement may be awarded to a single entity. No more than one ABC will be funded in any given Russian city.

Evaluation Criteria

Consideration for financial assistance under the program will be based on the following evaluation criteria:

(1) Quality of Work Plan: core commercial activities, marketing strategy, management/staffing, cooperation with ITA and outreach programs to NIS firms;

(2) Qualifications of Applicant: financial history, personnel's experience in region and in delivering commercial products/services;

(3) Market Knowledge of Locations: applicant's demonstrated familiarity with the market conditions in the proposed city and/or region;

(4) Project Timetable: ability of applicant to complete major stages in the scope of work quickly, particularly bringing an ABC into the fully-operational stage;

(5) U.S. Small Business Utility: accessibility of services to small firms and reasonableness of fees;

(6) Cost-Effectiveness: reasonableness, allowability and allocability of costs.

For purpose of evaluation of the applications, the above criteria will be weighted as follows: Criterion (1) will be worth a maximum of 30 (thirty) percent; criterion (2) will be worth a maximum of 30 (thirty) percent; criterion (3) will be worth a maximum of 20 (twenty) percent; criterion (4) will be worth a maximum of 10 (ten) percent; criterion (5) and (6) will be worth a maximum of 5 (five) percent each.

Selection Procedure

Each application will be evaluated by a panel of at least three independent ITA reviewers qualified to evaluate applications submitted under the program. Applications will be evaluated on a competitive basis in accordance with the evaluation criteria set forth above. Awards will be based on highest total accumulated score and geographic location.

Notifications

All applicants are advised of the following:

(1) Unsatisfactory performance under prior Federal awards may result in an application not being considered for funding.

(2) If applicants incur any cost prior to an award being made, they do so solely at their own risk of not being reimbursed by the Federal Government. Not withstanding any verbal assurance that they may receive, there is no obligation on the part of the Department of Commerce to cover pre-award costs.

(3) If an application is selected for funding, the Department of Commerce has no obligation to provide any additional future funding in connection with the award. Renewal of an award to increase funding or extend the period of performance is at the total discretion of the Department of Commerce.

(4) No award of Federal funds shall be made to an applicant who has an outstanding debt until either:

a. The delinquent account is paid in full.

b. A negotiated repayment schedule is established and at least one payment is received; or

c. Other arrangements satisfactory to the Department of Commerce are made.

(5) All primary applicants must submit a completed Form CD–511, ''Certification Regarding Debarment, Suspension and other Responsibility Matters; Drug-Free Workplace Requirements and Lobbying''. Prospective participants (as defined at 15 CFR part 26, section 105) are subject to 15 CFR part 26, ''Nonprocurement Debarment and Suspension'' and the related section of the certification form prescribed above applies. Grantees (as defined at 15 CFR part 26, section 605) are subject to 15 CFR part 26, subpart F ''Government wide Requirement for Drug-Free Workplace (Grants)'' and the related section of the certification form prescribed above applies. Persons (as defined at 15 CFR part 28, section 105) are subject to the lobbying provisions of 31 U.S.C. 1352, ''Limitation on the use of appropriated funds to influence certain Federal contracting and financial transactions;'' and the lobbying section of the certification form prescribed above applies to applications/bids for grants, cooperative agreements, and contracts for more than $100,000 and loans and loan guarantees for more that $150,000 or the single family maximum mortgage limit for affected programs, whichever is greater''. Any applicant that has paid or will pay for lobbying using any funds must submit an SF-LLL, ''Disclosure of Lobbying Activities,'' as required under 15 CFR part 28. Appendix B.

(6) Recipients shall require applicants/bidders for subgrants, contracts, subcontracts, or other lower tier covered transactions at any tier under the award to submit, if applicable, a completed Form CD–512, ''Certifications Regarding Debarment, Suspension, Ineligibility and Voluntary Exclusion-Lower Tier Covered Transaction and Lobbying'' and disclosure form, SF-LLL, ''Disclosure of Lobbying Activities.'' Form CD–512 is intended for the use of recipients and should not be submitted by any tier recipient or sub-recipient should be submitted to the Department of Commerce in accordance with instructions contained in the award document.

(7) A false statement on an application is grounds for denial or termination of funds and grounds for possible punishment by a fine or imprisonment as provided in 18 U.S.C. 1001 and denial or termination of Federal funding.

(8) All recipients and sub-recipients are subject to all applicable Federal laws and Federal Department of Commerce policies, regulations, and procedures applicable to Federal assistance awards. For-profit organizations shall be subject to OMB Circular A–110 and 15 CFR 29a.

(9) All non-profit and for-profit applicants are subject to a name check review process. Name checks are intended to reveal if any key individuals associated with the applicant have been convicted of or are presently facing criminal charges such as fraud, theft, perjury, or other matters which significantly reflect on the applicant's management honesty or financial integrity.

(10) Recipients are subject to the Fly America Act (49 USC sec. 1517 as implemented by 41 CFR sec. 301–3.6).

(11) Executive Order 12372 ''Intergovernmental Review of Federal Programs'' does not apply to this program.

(12) Paperwork Reduction Act does apply to this program. This document involves collections of information subject to the Paperwork Reduction Act, which have been approved by the Office of Management and Budget under OMB Control Numbers 0348–0043, 0348–0044, 0348–0040, 0348–0046, and 0651–0001. Notwithstanding any other provision of law, no person is required to respond to nor shall a person be subject to a penalty for failure to comply with a collection of information subject to the requirements of the Paperwork Reduction Act unless that collection of information displays a current valid OMB control number.

Dated: September 11, 1997.

E. Vivian Spathopoulos,

Deputy Director, US&FCS/Russia-NIS Program Office.

[FR Doc. 97–24525 Filed 9–12–97; 8:45 am]

BILLING CODE 3510–FP–U

DEPARTMENT OF COMMERCE

National Telecommunications and Information Administration

Performance Review Board; Membership

The following individuals are eligible to service on the Performance Review Board in accordance with the National Telecommunications and Information Administration Senior Executive Service performance appraisal system:

Kathryn C. Brown
Ronald P. Hack
Shirl G. Kinney
Bernadette McGuire-Rivera
Richard D. Parlow
Neal B. Seitz
William F. Utlaut

Anthony J. Calza,

Acting Executive Secretary, National Telecommunications and Information Administration, Performance Review Board.

[FR Doc. 97–24398 Filed 9–12–97; 8:45 am]

BILLING CODE 3510–BS–M

COMMITTEE FOR THE IMPLEMENTATION OF TEXTILE AGREEMENTS

Adjustment of Import Limits for Certain Cotton, Wool, Man-Made Fiber, Silk Blend and Other Vegetable Fiber Textiles and Textile Products Produced or Manufactured in Macau

September 9, 1997.

AGENCY: Committee for the Implementation of Textile Agreements (CITA).

ACTION: Issuing a directive to the Commissioner of Customs adjusting limits.

EFFECTIVE DATE: September 16, 1997.

FOR FURTHER INFORMATION CONTACT: Helen L. LeGrande, International Trade Specialist, Office of Textiles and Apparel, U.S. Department of Commerce, (202) 482–4212. For information on the quota status of these limits, refer to the Quota Status Reports posted on the bulletin boards of each Customs port or call (202) 927–5850. For information on embargoes and quota re-openings, call (202) 482–3715.

SUPPLEMENTARY INFORMATION:

Authority: Executive Order 11651 of March 3, 1972, as amended; section 204 of the Agricultural Act of 1956, as amended (7 U.S.C. 1854); Uruguay Round Agreements Act.

The current limits for certain categories are being adjusted, variously, for swing and carryover.

A description of the textile and apparel categories in terms of HTS numbers is available in the CORRELATION: Textile and Apparel Categories with the Harmonized Tariff Schedule of the United States (see **Federal Register** notice 61 FR 66263, published on December 17, 1996). Also see 61 FR 68244, published on December 27, 1996.

The letter to the Commissioner of Customs and the actions taken pursuant to it are not designed to implement all of the provisions of the Uruguay Round Agreements Act and the Uruguay Round

Agreement on Textiles and Clothing, but are designed to assist only in the implementation of certain of their provisions.

Troy H. Cribb,

Chairman, Committee for the Implementation of Textile Agreements.

Committee for the Implementation of Textile Agreements

September 9, 1997.

Commissioner of Customs,
Department of the Treasury, Washington, DC 20229.

Dear Commissioner: This directive amends, but does not cancel, the directive issued to you on December 20, 1996, by the Chairman, Committee for the Implementation of Textile Agreements. That directive concerns imports of certain cotton, wool, man-made fiber, silk blend and other vegetable fiber textiles and textile products, produced or manufactured in Macau and exported during the twelve-month period which began on January 1, 1997 and extends through December 31, 1997.

Effective on September 16, 1997, you are directed to adjust the current limits for the following categories, as provided for under the Uruguay Round Agreements Act and the Uruguay Round Agreement on Textiles and Clothing:

Category	Adjusted twelve-month limit [1]
Levels in Group I	
225	4,347,145 square meters.
317	5,371,627 square meters.
333/334/335/833/834/835.	311,940 dozen of which not more than 139,253 dozen shall be in Categories 333/335/833/835.
336/836	71,174 dozen.
338	364,138 dozen.
339	1,519,798 dozen.
340	362,144 dozen.
341	214,551 dozen.
342	99,771 dozen.
345	61,494 dozen.
347/348/847	828,902 dozen.
350/850	73,935 dozen.
351/851	78,843 dozen.
359–C/659–C [2]	402,267 kilograms.
359–V [3]	134,089 kilograms.
625/626/627/628/629	5,988,653 square meters.
633/634/635	621,197 dozen.
638/639/838	1,923,178 dozen.
640	146,254 dozen.
641/840	236,461 dozen.
642/842	137,764 dozen.
645/646	322,496 dozen.
647/648	691,600 dozen.
659–S [4]	147,333 kilograms.
Group II	
400–469, as a group	1,664,266 square meters equivalent.
445/446	90,358 dozen.

[1] The limits have not been adjusted to account for any imports exported after December 31, 1996.

[2] Category 359–C: only HTS numbers 6103.42.2025, 6103.49.8034, 6104.62.1020, 6104.69.8010, 6114.20.0048, 6114.20.0052, 6203.42.2010, 6203.42.2090, 6204.62.2010, 6211.32.0010, 6211.32.0025 and 6211.42.0010; Category 659–C: only HTS numbers 6103.23.0055, 6103.43.2020, 6103.43.2025, 6103.49.2000, 6103.49.8038, 6104.63.1020, 6104.63.1030, 6104.69.1000, 6104.69.8014, 6114.30.3044, 6114.30.3054, 6203.43.2010, 6203.43.2090, 6203.49.1010, 6203.49.1090, 6204.63.1510, 6204.69.1010, 6210.10.9010, 6211.33.0010, 6211.33.0017 and 6211.43.0010.

[3] Category 359–V: only HTS numbers 6103.19.2030, 6103.19.9030, 6104.12.0040, 6104.19.8040, 6110.20.1022, 6110.20.1024, 6110.20.2030, 6110.20.2035, 6110.90.9044, 6110.90.9046, 6201.92.2010, 6202.92.2020, 6203.19.1030, 6203.19.9030, 6204.12.0040, 6204.19.8040, 6211.32.0070 and 6211.42.0070.

[4] Category 659–S: only HTS numbers 6112.31.0010, 6112.31.0020, 6112.41.0010, 6112.41.0020, 6112.41.0030, 6112.41.0040, 6211.11.1010, 6211.11.1020, 6211.12.1010 and 6211.12.1020.

The Committee for the Implementation of Textile Agreements has determined that these actions fall within the foreign affairs exception to the rulemaking provisions of 5 U.S.C. 553(a)(1).

Sincerely,

Troy H. Cribb,

Chairman, Committee for the Implementation of Textile Agreements.

[FR Doc.97–24339 Filed 9–12–97; 8:45 am]

BILLING CODE 3510–DR–F

COMMITTEE FOR THE IMPLEMENTATION OF TEXTILE AGREEMENTS

Adjustment of an Import Limit for Certain Man-Made Fiber Textile Products Produced or Manufactured in Malaysia

September 9, 1997.

AGENCY: Committee for the Implementation of Textile Agreements (CITA).

ACTION: Issuing a directive to the Commissioner of Customs adjusting a limit.

EFFECTIVE DATE: September 16, 1997.

FOR FURTHER INFORMATION CONTACT: Ross Arnold, International Trade Specialist, Office of Textiles and Apparel, U.S. Department of Commerce, (202) 482–4212. For information on the quota status of this limit, refer to the Quota Status Reports posted on the bulletin boards of each Customs port or call (202) 927–5850. For information on embargoes and quota re-openings, call (202) 482–3715.

SUPPLEMENTARY INFORMATION:

Authority: Executive Order 11651 of March 3, 1972, as amended; section 204 of the Agricultural Act of 1956, as amended (7 U.S.C. 1854); Uruguay Round Agreements Act.

The current limit for Category 619 is being increased for swing, carryover, and carryforward.

A description of the textile and apparel categories in terms of HTS numbers is available in the CORRELATION: Textile and Apparel Categories with the Harmonized Tariff Schedule of the United States (see **Federal Register** notice 61 FR 66263, published on December 17, 1996). Also see 61 FR 58041, published on November 12, 1996.

The letter to the Commissioner of Customs and the actions taken pursuant to it are not designed to implement all of the provisions of the Uruguay Round Agreements Act and the Uruguay Round Agreement on Textiles and Clothing, but are designed to assist only in the implementation of certain of their provisions.

Troy H. Cribb,

Chairman, Committee for the Implementation of Textile Agreements.

Committee for the Implementation of Textile Agreements

September 9, 1997.

Commissioner of Customs,
Department of the Treasury, Washington, DC 20229.

Dear Commissioner: This directive amends, but does not cancel, the directive issued to you on November 4, 1996, by the Chairman, Committee for the Implementation of Textile Agreements. That directive concerns imports of certain cotton, wool and man-made fiber textiles and textile products, and silk blend and other vegetable fiber apparel, produced or manufactured in Malaysia and exported during the period which began on January 1, 1997 and extends through December 31, 1997.

Effective on September 16, 1997, you are directed to increase the limit for Category 619 to 5,576,362 square meters [1], as provided for under the Uruguay Round Agreements Act and the Uruguay Round Agreement on Textiles and Clothing.

The Committee for the Implementation of Textile Agreements has determined that this action falls within the foreign affairs exception of the rulemaking provisions of 5 U.S.C. 553(a)(1).

Sincerely,

Troy H. Cribb,

Chairman, Committee for the Implementation of Textile Agreements.

[FR Doc. 97–24338 Filed 9–12–97; 8:45 am]

BILLING CODE 3510–DR–F

[1] The limit has not been adjusted to account for any imports exported after December 31, 1996.

DEPARTMENT OF DEFENSE

Office of the Secretary

[Transmittal No. 97–33]

36(b)(1) Arms Sales Notification

AGENCY: Department of Defense, Defense Security Assistance Agency.

ACTION: Notice.

SUMMARY: The Department of Defense is publishing the unclassified text of a section 36(b)(1) arms sales notification. This is published to fulfill the requirements of section 155 of Public Law 104–164 dated 21 July 1996.

FOR FURTHER INFORMATION CONTACT: Ms. J. Hurd, DSAA/COMPT/CPD, (703) 604–6575

The following is a copy of a letter to the Speaker of the House of Representatives, Transmittal 97–33, with attached transmittal and policy justification pages.

Dated: September 9, 1997.

L.M. Bynum,

Alternate OSD Federal Register Liaison Officer, Department of Defense.

BILLING CODE 5000–04–M

DEFENSE SECURITY ASSISTANCE AGENCY

WASHINGTON, DC 20301-2800

03 SEP 1997

In reply refer to:
I-51077/97

Honorable Newt Gingrich
Speaker of the House of
Representatives
Washington, D.C. 20515-6501

Dear Mr. Speaker:

Pursuant to the reporting requirements of Section 36(b)(1) of the Arms Export Control Act, we are forwarding herewith Transmittal No. 97-33, concerning the Department of the Army's proposed Letter(s) of Offer and Acceptance (LOA) to Egypt for defense articles and services estimated to cost $100 million. Soon after this letter is delivered to your office, we plan to notify the news media.

Sincerely,

MICHAEL S. DAVISON, JR.
LIEUTENANT GENERAL, USA
DIRECTOR

Attachments

Same ltr to:
House Committee on International Relations
Senate Committee on Appropriations
Senate Committee on Foreign Relations
House Committee on National Security
Senate Committee on Armed Services
House Committee on Appropriations

Transmittal No. 97-33

Notice of Proposed Issuance of Letter of Offer
Pursuant to Section 36(b)(1)
of the Arms Export Control Act

(i) Prospective Purchaser: Egypt

(ii) Total Estimated Value:

Major Defense Equipment*	$ 0 million
Other	$ 100 million
TOTAL	$ 100 million

(iii) Description of Articles or Services Offered: Medical equipment, medical furnishings, training and other related elements of logistics support to fully furbish and support a 650 bed International Medical Center in Egypt which will be independently funded and constructed by the Government of Egypt.

(iv) Military Department: Army (HAW)

(v) Sales Commission, Fee, etc., Paid, Offered, or Agreed to be Paid: none

(vi) Sensitivity of Technology Contained in the Defense Article or Defense Services Proposed to be Sold: none

(vii) Date Report Delivered to Congress: 03 SEP 1997

* as defined in Section 47(6) of the Arms Export Control Act.

POLICY JUSTIFICATION

Egypt - Medical Equipment

The Government of Egypt (GOE) has requested the purchase of medical equipment, medical furnishings, training and other related elements of logistics support to fully furbish and support a 650 bed International Medical Center in Egypt which will be independently funded and constructed by GOE. The estimated cost is $100 million.

This sale will contribute to the foreign policy and national security of the United States by helping to improve the medical services provided to the military forces of a friendly country which has been and continues to be an important force for political stability and economic progress in the Middle East.

The sale of this equipment and support will not affect the basic military balance in the region.

The principal contractors are undetermined at this time. There are no offset agreements proposed to be entered into in connection with this potential sale.

The number of U.S. Government personnel and contractor representatives required in-country to support the program will be determined in joint negotiations as the program proceeds through the development, production and equipment installation phases.

There will be no adverse impact on U.S. defense readiness as a result of this sale.

[FR Doc. 97–24286 Filed 9–12–97; 8:45 am]
BILLING CODE 5000–04–C

DEPARTMENT OF DEFENSE

Office of the Secretary

[Transmittal No. 97–36]

36(b)(1) Arms Sales Notification

AGENCY: Department of Defense, Defense Security Assistance Agency.

ACTION: Notice.

SUMMARY: The Department of Defense is publishing the unclassified text of a section 36(b)(1) arms sales notification. This is published to fulfill the requirements of section 155 of Public Law 104–164 dated 21 July 1996.

FOR FURTHER INFORMATION CONTACT: Ms. J. Hurd, DSAA/COMPT/CPD, (703) 604–6575.

The following is a copy of a letter to the Speaker of the House of Representatives, Transmittal 97–36, with attached transmittal, policy justification, and sensitivity of technology pages.

Dated: September 9, 1997.

L.M. Bynum,

Alternate OSD Federal Register Liaison Officer, Department of Defense.

BILLING CODE 5000–04–M

DEFENSE SECURITY ASSISTANCE AGENCY

WASHINGTON, DC 20301-2800

03 SEP 1997

In reply refer to:
I-51074/97

Honorable Newt Gingrich
Speaker of the House of
Representatives
Washington, D.C. 20515-6501

Dear Mr. Speaker:

Pursuant to the reporting requirements of Section 36(b)(1) of the Arms Export Control Act, we are forwarding herewith Transmittal No. 97-36, concerning the Department of the Air Force's proposed Letter(s) of Offer and Acceptance (LOA) to Korea for defense articles and services estimated to cost $3.0 billion. Soon after this letter is delivered to your office, we plan to notify the news media.

Sincerely,

MICHAEL S. DAVISON, JR.
LIEUTENANT GENERAL, USA
DIRECTOR

Attachments

Same ltr to:
House Committee on International Relations
Senate Committee on Appropriations
Senate Committee on Foreign Relations
House Committee on National Security
Senate Committee on Armed Services
House Committee on Appropriations

Transmittal No. 97-36

Notice of Proposed Issuance of Letter of Offer
Pursuant to Section 36(b)(1)
of the Arms Export Control Act

(i) Prospective Purchaser: Korea

(ii) Total Estimated Value:

Major Defense Equipment*	$2.7 billion
Other	$0.3 billion
TOTAL	$3.0 billion

(iii) Description of Articles or Services Offered: Four E-767 Airborne Warning and Control Systems (AWACS), spare and repair parts, support equipment, publications and technical documentation, personnel training and training equipment, U.S. government and contractor technical and logistics personnel services, logistics support and other related program elements to ensure complete AWACS program supportability.

(iv) Military Department: Air Force (SIP)

(v) Sales Commission, Fee, etc., Paid, Offered, or Agreed to be Paid: none

(vi) Sensitivity of Technology Contained in the Defense Article or Defense Services Proposed to be Sold: See Annex attached.

(vii) Date Report Delivered to Congress: 03 SEP 1997

* as defined in Section 47(6) of the Arms Export Control Act.

POLICY JUSTIFICATION

Korea - E-767 Airborne Warning and Control Systems

The Government of Korea has requested the purchase of four E-767 Airborne Warning and Control Systems (AWACS), spare and repair parts, support equipment, publications and technical documentation, personnel training and training equipment, U.S. government and contractor technical and logistics personnel services, logistics support and other related program elements to ensure complete AWACS program supportability. The estimated cost is $3.0 billion.

This sale will contribute to the foreign policy and national security of the United States by helping to improve the security of a friendly country which has been and continues to be an important force for political stability and economic progress in Northeast Asia.

These AWACS will supplement their air/maritime defense forces and Korea will have no difficulty absorbing these aircraft into its armed forces.

The sale of this equipment and support will not affect the basic military balance in the region.

The prime contractor will be Boeing Company, Seattle, Washington. One or more proposed offset agreements may be related to this proposed sale.

Implementation of this sale will require the assignment of two U.S. government personnel and up to 12 contractor representatives to Korea for periods ranging from one year to two years.

There will be no adverse impact on U.S. defense readiness as a result of this sale.

[FR Doc. 97–24287 Filed 9–12–97; 8:45 am]
BILLING CODE 5000–04–C

DEPARTMENT OF DEFENSE

Office of the Secretary

[Transmittal No. 97–37]

36(b)(1) Arms Sales Notification

AGENCY: Department of Defense, Defense Security Assistance Agency.

ACTION: Notice.

SUMMARY: The Department of Defense is publishing the unclassified text of a section 36(b)(1) arms sales notification. This is published to fulfill the requirements of section 155 of Public Law 104–164 dated 21 July 1996.

FOR FURTHER INFORMATION CONTACT:

Ms. J. Hurd, DSAA/COMPT/CPD, (703) 604–6575.

The following is a copy of a letter to the Speaker of the House of Representatives, Transmittal 97–37, with attached transmittal and policy justification pages.

Dated: September 9, 1997.

L.M. Bynum,

Alternate OSD Federal Register Liaison Officer, Department of Defense.

BILLING CODE 5000–04–M

DEFENSE SECURITY ASSISTANCE AGENCY

WASHINGTON, DC 20301-2800

03 SEP 1997

In reply refer to:
I-51106/97

Honorable Newt Gingrich
Speaker of the House of
Representatives
Washington, D.C. 20515-6501

Dear Mr. Speaker:

Pursuant to the reporting requirements of Section 36(b)(1) of the Arms Export Control Act, we are forwarding herewith Transmittal No. 97-37 and under separate cover the classified annex thereto. This Transmittal concerns the Department of the Army's proposed Letter(s) of Offer and Acceptance (LOA) to Taipei Economic and Cultural Representative Office (TECRO) in the United States for defense articles and services estimated to cost $172 million. Soon after this letter is delivered to your office, we plan to notify the news media of the unclassified portion of this Transmittal.

Sincerely,

MICHAEL S. DAVISON, JR.
LIEUTENANT GENERAL, USA
DIRECTOR

Attachments

Separate Cover:
Classified Annex

Same ltr to:
House Committee on International Relations
Senate Committee on Appropriations
Senate Committee on Foreign Relations
House Committee on National Security
Senate Committee on Armed Services
House Committee on Appropriations

Transmittal No. 97-37

Notice of Proposed Issuance of Letter of Offer
Pursuant to Section 36(b)(1)
of the Arms Export Control Act

(i) Prospective Purchaser: Taipei Economic and Cultural Representative Office (TECRO) in the Untied States

(ii) Total Estimated Value:

Major Defense Equipment*	$ 167 million
Other	$ 5 million
TOTAL	$ 172 million

(iii) Description of Articles or Services Offered: Thirteen OH-58D Kiowa Warrior Armed Scout helicopters with mast mounted sight subsystems, 13 T703-AD-700 helicopter engines, 13 HELLFIRE launchers, Hydra 70 rockets and rocket launchers, ammunition, spare and repair parts, support equipment, personnel training and training equipment, technical data and publications, U.S. Government and contractor engineering, technical and logistics support services, and other related elements of logistics to provide full program support.

(iv) Military Department: Army (JAL, Amendment 8; YQV, Amendment 5; and ODE)

(v) Sales Commission, Fee, etc., Paid, Offered, or Agreed to be Paid: none

(vi) Sensitivity of Technology Contained in the Defense Article or Defense Services Proposed to be Sold: See Annex under separate cover

(vii) Date Report Delivered to Congress: 03 SEP 1997

* as defined in Section 47(6) of the Arms Export Control Act.

POLICY JUSTIFICATION

Taipei Economic and Cultural Representative Office (TECRO) in the United States - OH-58D Kiowa Warrior Armed Scout Helicopters

The Taipei Economic and Cultural Representative Office (TECRO) in the United States has requested the purchase of 13 OH-58D Kiowa Warrior Armed Scout helicopters with mast mounted sight subsystems, 13 T703-AD-700 helicopter engines, 13 HELLFIRE launchers, Hydra 70 rockets and rocket launchers, ammunition, spare and repair parts, support equipment, personnel training and training equipment, technical data and publications, U.S. Government and contractor engineering, technical and logistics support services, and other related elements of logistics to provide full program support. The estimated cost is $172 million.

This sale is consistent with United States law and policy, as expressed in Public Law 96-8.

The recipient will use these helicopters to maintain and further upgrade its air-to-surface defensive capability. The recipient, which already has these helicopters in its inventory, will have no difficulty absorbing these helicopters

The sale of this equipment and support will not affect the basic military balance in the region.

The prime contractor will be Bell Helicopter Textron, Incorporated, Fort Worth, Texas. There are no offset agreements proposed to be entered into in connection with this potential sale.

Implementation of this sale will require the assignment of four U.S. Government Quality Assurance Specialists and up to four contractor representatives for one to two weeks to support delivery of the aircraft. Additionally, four contractor representatives will be required in-country for a period of up to three years in support of this program.

There will be no adverse impact on U.S. defense readiness as a result of this sale.

[FR Doc. 97–24288 Filed 9–12–97; 8:45 am]
BILLING CODE 5000–04–C

DEPARTMENT OF DEFENSE

Office of the Secretary

[Transmittal No. 97–38]

36(b)(1) Arms Sales Notification

AGENCY: Department of Defense, Defense Security Assistance Agency.

ACTION: Notice.

SUMMARY: The Department of Defense is publishing the unclassified text of a section 36(b)(1) arms sales notification. This is published to fulfill the requirements of section 155 of Public Law 104–164 dated 21 July 1996.

FOR FURTHER INFORMATION CONTACT: Ms. J. Hurd, DSAA/COMPT/CPD, (703) 604–6575.

The following is a copy of a letter to the Speaker of the House of Representatives, Transmittal 97–38, with attached transmittal and policy justification pages.

Dated: September 9, 1997.

L.M. Bynum,

Alternate OSD Federal Register Liaison Officer, Department of Defense.

BILLING CODE 5000–04–M

DEFENSE SECURITY ASSISTANCE AGENCY

WASHINGTON, DC 20301-2800

03 SEP 1997

In reply refer to:
I-51545/97

Honorable Newt Gingrich
Speaker of the House of
Representatives
Washington, D.C. 20515-6501

Dear Mr. Speaker:

Pursuant to the reporting requirements of Section 36(b)(1) of the Arms Export Control Act, we are forwarding herewith Transmittal No. 97-38 and under separate cover the classified annex thereto. This Transmittal concerns the Department of the Army's proposed Letter(s) of Offer and Acceptance (LOA) to Kuwait for defense articles and services estimated to cost $800 million. Soon after this letter is delivered to your office, we plan to notify the news media of the unclassified portion of this Transmittal.

Sincerely,

MICHAEL S. DAVISON, JR.
LIEUTENANT GENERAL, USA
DIRECTOR

Attachments

Separate Cover:
Classified Annex

Same ltr to: House Committee on International Relations
Senate Committee on Appropriations
Senate Committee on Foreign Relations
House Committee on National Security
Senate Committee on Armed Services
House Committee on Appropriations

Transmittal No. 97-38

Notice of Proposed Issuance of Letter of Offer
Pursuant to Section 36(b)(1)
of the Arms Export Control Act

(i) Prospective Purchaser: Kuwait

(ii) Total Estimated Value:

Major Defense Equipment*	$ 440 million
Other	$ 360 million
TOTAL	$ 800 million

(iii) Description of Articles or Services Offered:
Sixteen AH-64D APACHE attack helicopters, 384 HELLFIRE missiles (including 24 training and 50 dummy missiles), two spare HELLFIRE launchers, four spare T-700 GE engines, one spare Target Acquisition Designation Sight system, spare and repair parts, support equipment, tools and test sets, ammunition, 10,916 Hydra-70 rockets, chaff, Integrated Helmet and Display Sight System (IHADSS), 30mm cartridges, electronic equipment test facility spares, publications, U.S. maintenance of selective repairable material, personnel training and training equipment, Quality Assurance Team (QAT) and Technical Assistance Fielding Team (TAFT), U.S. Government and contractor engineering and technical services, facility design and construction and other related elements of logistics support.

(iv) Military Department: Army (JBC)

(v) Sales Commission, Fee, etc., Paid, Offered, or Agreed to be Paid: none

(vi) Sensitivity of Technology Contained in the Defense Article or Defense Services Proposed to be Sold:
See Annex under separate cover.

(vii) Date Report Delivered to Congress: 08 Sep 1997

* as defined in Section 47(6) of the Arms Export Control Act.

POLICY JUSTIFICATION

Kuwait - AH-64D APACHE Attack Helicopters

The Government of Kuwait has requested the purchase of 16 AH-64D APACHE attack helicopters, 384 HELLFIRE missiles (including 24 training and 50 dummy missiles), two spare HELLFIRE launchers, four spare T-700 GE engines, one spare Target Acquisition Designation Sight system, spare and repair parts, support equipment, tools and test sets, ammunition, 10,916 Hydra-70 rockets, chaff, Integrated Helmet and Display Sight System (IHADSS), 30mm cartridges, electronic equipment test facility spares, publications, U.S. maintenance of selective repairable material, personnel training and training equipment, Quality Assurance Team (QAT) and Technical Assistance Fielding Team (TAFT), U.S. Government and contractor engineering and technical services, facility design and construction and other related elements of logistics support. The estimated cost is $800 million.

This sale is consistent with the stated U.S. policy of assisting friendly nations to provide for their own defense by allowing the transfer of reasonable amounts of defense articles and services.

This sale will enable Kuwait to upgrade its anti-armor day/night missile capability, provide for the defense of vital installations and provide close air support for the military ground forces. Kuwait will have no difficulty absorbing these helicopters into its armed forces.

The sale of this equipment and support will not affect the basic military balance in the region.

The principal contractors are: McDonnell Douglas Helicopter Systems, Mesa, Arizona; Lockheed Martin Electronics and Missiles, Orlando, Florida; Lockheed Martin Federal Systems, Incorporated, Owego, New York; and General Electric, Lynn, Massachusetts. One or more proposed offset agreements may be related to this proposed sale.

Implementation of this sale will require the assignment in-country of six U.S. Government Quality Assurance Team personnel for a period up to 12 weeks and an eight person Technical Assistance Fielding Team for a period up to two years. If a maintenance contract is part of this program, a large contingency of U.S. personnel and contractor representatives would be required in-country for up to two years.

There will be no adverse impact on U.S. defense readiness as a result of this sale.

[FR Doc. 97–24289 Filed 9–12–97; 8:45 am]
BILLING CODE 5000–04–C

DEPARTMENT OF DEFENSE

Office of the Secretary

[Transmittal No. 97–39]

36(b)(1) Arms Sales Notification

AGENCY: Department of Defense, Defense Security Assistance Agency.

ACTION: Notice.

SUMMARY: The Department of Defense is publishing the unclassified text of a section 36(b)(1) arms sales notification. This is published to fulfill the requirements of section 155 of Public Law 104–164 dated 21 July 1996.

FOR FURTHER INFORMATION CONTACT: Ms. J. Hurd, DSAA/COMPT/CPD, (703) 604–6575.

The following is a copy of a letter to the Speaker of the House of Representatives, Transmittal 97–39, with attached transmittal, policy justification, and sensitivity of technology pages.

Dated: September 9, 1997.

L.M. Bynum,

Alternate OSD Federal Register Liaison Officer, Department of Defense.

BILLING CODE 5000–04–M

DEFENSE SECURITY ASSISTANCE AGENCY

WASHINGTON, DC 20301-2800

03 SEP 1997

In reply refer to:
I-51546/97

Honorable Newt Gingrich
Speaker of the House of
Representatives
Washington, D.C. 20515-6501

Dear Mr. Speaker:

Pursuant to the reporting requirements of Section 36(b)(1) of the Arms Export Control Act, we are forwarding herewith Transmittal No. 97-39, concerning the Department of the Navy's proposed Letter(s) of Offer and Acceptance (LOA) to Egypt for defense articles and services estimated to cost $32 million. Soon after this letter is delivered to your office, we plan to notify the news media.

Sincerely,

MICHAEL S. DAVISON, JR.
LIEUTENANT GENERAL, USA
DIRECTOR

Same ltr to:
House Committee on International Relations
Senate Committee on Appropriations
Senate Committee on Foreign Relations
House Committee on National Security
Senate Committee on Armed Services
House Committee on Appropriations

Attachments

Transmittal No. 97-39

Notice of Proposed Issuance of Letter of Offer
Pursuant to Section 36(b)(1)
of the Arms Export Control Act

(i) Prospective Purchaser: Egypt

(ii) Total Estimated Value:

Major Defense Equipment*	$ 25 million
Other	$ 7 million
TOTAL	$ 32 million

(iii) Description of Articles or Services Offered: Eighty-four MK-46 torpedoes with containers, MK-85 exercise heads and short fuel tanks, torpedo warheads, surface ship and helicopter launch accessories, training torpedoes, personnel training, supply support, training, spare and repair parts, publications and technical data, engineering technical services, support and test equipment, and other related elements of logistics support.

(iv) Military Department: Navy (ABU)

(v) Sales Commission, Fee, etc., Paid, Offered, or Agreed to be Paid: none

(vi) Sensitivity of Technology Contained in the Defense Article or Defense Services Proposed to be Sold: See Annex attached.

(vii) Date Report Delivered to Congress: 03 SEP 1997

* as defined in Section 47(6) of the Arms Export Control Act.

POLICY JUSTIFICATION

Egypt - MK-46 Torpedoes

The Government of Egypt has requested the purchase of 84 MK-46 torpedoes with containers, MK-85 exercise heads and short fuel tanks, torpedo warheads, surface ship and helicopter launch accessories, training torpedoes, personnel training, supply support, training, spare and repair parts, publications and technical data, engineering technical services, support and test equipment, and other related elements of logistics support. The estimated cost is $32 million.

This sale will contribute to the foreign policy and national security of the United States by helping to improve the security of a friendly country which has been and continues to be an important force for political stability and economic progress in the Middle East.

Egypt will use these torpedoes on their U.S.-origin PERRY class frigates and their SH-2G anti-submarine warfare (ASW) helicopters, also of U.S.-origin. These torpedoes will upgrade current ASW capabilities by introducing state-of-the-art torpedo technology. This will enable the Egyptian Navy to provide for the security of the Suez Canal and its shipping lanes in the Mediterranean Sea. Egypt, which already has torpedoes in its inventory, will have no difficulty absorbing these additional torpedoes.

The sale of this equipment and support will not affect the basic military balance in the region.

The prime contractor for the MK-46 torpedoes will be Alliant Techsystems Incorporated, Hopkins, Minnesota. There are no offset agreements proposed to be entered into in connection with this potential sale.

Implementation of this sale will not require the assignment of any additional U.S. Government personnel or contractor representatives to Egypt.

There will be no adverse impact on U.S. defense readiness as a result of this sale.

Transmittal No. 97-39

Notice of Proposed Issuance of Letter of Offer
Pursuant to Section 36(b)(1)
of the Arms Export Control Act

Annex
Item No. vi

(vi) Sensitivity of Technology:

1. The MK-46 MOD 5A(SW) torpedo has the following confidential components, including applicable technical and equipment documentation and manuals;

a. Transducer
b. Transmitter
c. Receiver
d. Control Group
e. Exploder

2. The loss of this classified information to a technologically advanced or competent adversary could result in the development of countermeasures or equivalent systems which could reduce weapon system effectiveness or be used in the development of a system with similar or advanced capabilities.

3. A determination has been made that the recipient country can provide substantially the same degree of protection for the sensitive technology being released as the U.S. Government. This sale is necessary in furtherance of the U.S. foreign policy and national security objectives outlined in the Policy Justification.

[FR Doc. 97–24290 Filed 9–12–97; 8:45 am]
BILLING CODE 5000–04–C

DEPARTMENT OF DEFENSE

Office of the Secretary

Transmittal No. 97–40]

36(b)(1) Arms Sales Notification

AGENCY: Department of Defense, Defense Security Assistance Agency.

ACTION: Notice.

SUMMARY: The Department of Defense is publishing the unclassified text of a section 36(b)(1) arms sales notification. This is published to fulfill the requirements of section 155 of Public Law 104–164 dated 21 July 1996.

FOR FURTHER INFORMATION CONTACT: Ms. J. Hurd, DSAA/COMPT/CPD, (703) 604–6575.

The following is a copy of a letter to the Speaker of the House of Representatives, Transmittal 97–40, with attached transmittal, policy justification, and sensitivity of technology pages.

Dated: September 9, 1997.

L.M. Bynum,

Alternate OSD Federal Register Liaison Officer, Department of Defense.

BILLING CODE 5000–04–M

DEFENSE SECURITY ASSISTANCE AGENCY

WASHINGTON, DC 20301-2800

03 SEP 1997

In reply refer to:
I-51548/97

Honorable Newt Gingrich
Speaker of the House of
Representatives
Washington, D.C. 20515-6501

Dear Mr. Speaker:

Pursuant to the reporting requirements of Section 36(b)(1) of the Arms Export Control Act, we are forwarding herewith Transmittal No. 97-40, concerning the Department of the Navy's proposed Letter(s) of Offer and Acceptance (LOA) to Egypt for defense articles and services estimated to cost $51 million. Soon after this letter is delivered to your office, we plan to notify the news media.

Sincerely,

MICHAEL S. DAVISON, JR.
LIEUTENANT GENERAL, USA
DIRECTOR

Attachments

Same ltr to: House Committee on International Relations
Senate Committee on Appropriations
Senate Committee on Foreign Relations
House Committee on National Security
Senate Committee on Armed Services
House Committee on Appropriations

Transmittal No. 97-40

Notice of Proposed Issuance of Letter of Offer
Pursuant to Section 36(b)(1)
of the Arms Export Control Act

(i) Prospective Purchaser: Egypt

(ii) Total Estimated Value:

Major Defense Equipment*	$ 46 million
Other	$ 5 million
TOTAL	$ 51 million

(iii) Description of Articles or Services Offered: Thirty-two AGM-84G (Block 1G) HARPOON missiles with containers, personnel training and training equipment, spare and repair parts, support equipment, publications, U.S. Government and contractor technical assistance and other related elements of logistics support. The Block 1G is the only missile in production at this time.

(iv) Military Department: Navy (ABW)

(v) Sales Commission, Fee, etc., Paid, Offered, or Agreed to be Paid: none

(vi) Sensitivity of Technology Contained in the Defense Article or Defense Services Proposed to be Sold: See Annex attached

(vii) Date Report Delivered to Congress: 03 SEP 1997

* as defined in Section 47(6) of the Arms Export Control Act.

POLICY JUSTIFICATION

Egypt - HARPOON Missiles

The Government of Egypt has requested the purchase of 32 AGM-84G (Block 1G) HARPOON missiles with containers, personnel training and training equipment, spare and repair parts, support equipment, publications, U.S. Government and contractor technical assistance and other related elements of logistics support. The Block 1G is the only missile in production at this time. The estimated cost is $51 million.

This sale will contribute to the foreign policy and national security of the United States by helping to improve the security of a friendly country which has been and continues to be an important force for political stability and economic progress in the Middle East.

The Egyptian Air Force intends to purchase the HARPOON missiles to be used as part of the main armament of their F-16 aircraft. Egypt, which already has HARPOON missiles in its inventory, will have no difficulty absorbing these additional missiles.

The sale of this equipment and support will not affect the basic military balance in the region.

The prime contractor will be McDonnell Douglas Aerospace, Saint Louis, Missouri. There are no offset agreements proposed to be entered into in connection with this potential sale.

Implementation of this sale will not require the assignment of any additional U.S. Government personnel or contractor representatives to Egypt.

There will be no adverse impact on U.S. defense readiness as a result of this sale.

Transmittal No. 97-40

Notice of Proposed Issuance of Letter of Offer
Pursuant to Section 36(b)(1)
of the Arms Export Control Act

Annex
Item No. vi

(vi) Sensitivity of Technology:

1. The AGM-84G (Block 1G) HARPOON missile contains sensitive technology and has the following classified components, including applicable technical and equipment documentation and manuals:

Guidance Section Components - Confidential

2. If a technologically advanced adversary were to obtain knowledge of the specific hardware and software elements, the information could be used to develop countermeasures or equivalent systems which might reduce weapon system effectiveness or be used in the development of a system with similar or advanced capabilities.

3. A determination has been made that Egypt can provide substantially the same degree of protection for the sensitive technology being released as the U.S. Government. This sale is necessary in furtherance of the U.S. foreign policy and national security objectives outlined in the Policy Justification.

[FR Doc. 97–24291 Filed 9–12–97; 8:45 am]
BILLING CODE 5000–04–C

DEPARTMENT OF DEFENSE

Office of the Secretary

[Transmittal No. 97–41]

36(b)(1) Arms Sales Notification

AGENCY: Department of Defense, Defense Security Assistance Agency.

ACTION: Notice.

SUMMARY: The Department of Defense is publishing the unclassified text of a section 36(b)(1) arms sales notification. This is published to fulfill the requirements of section 155 of Public Law 104–164 dated 21 July 1996.

FOR FURTHER INFORMATION CONTACT: Ms. J. Hurd, DSAA/COMPT/CPD, (703) 604–6575.

The following is a copy of a letter to the Speaker of the House of Representatives, Transmittal 97–41, with attached transmittal, policy justification, and sensitivity of technology pages.

Dated: September 9, 1997.

L.M. Bynum,

Alternate OSD Federal Register Liaison Officer, Department of Defense.

BILLING CODE 5000–04–M

DEFENSE SECURITY ASSISTANCE AGENCY

WASHINGTON, DC 20301-2800

03 SEP 1997

In reply refer to:
I-51552/97

Honorable Newt Gingrich
Speaker of the House of
Representatives
Washington, D.C. 20515-6501

Dear Mr. Speaker:

Pursuant to the reporting requirements of Section 36(b)(1) of the Arms Export Control Act, we are forwarding herewith Transmittal No. 97-42, concerning the Department of the Army's proposed Letter(s) of Offer and Acceptance (LOA) to Korea for defense articles and services estimated to cost $45 million. Soon after this letter is delivered to your office, we plan to notify the news media.

Sincerely,

MICHAEL S. DAVISON, JR.
LIEUTENANT GENERAL, USA
DIRECTOR

Same ltr to: House Committee on International Relations
Senate Committee on Appropriations
Senate Committee on Foreign Relations
House Committee on National Security
Senate Committee on Armed Services
House Committee on Appropriations

Attachments

Transmittal No. 97-42

Notice of Proposed Issuance of Letter of Offer
Pursuant to Section 36(b)(1)
of the Arms Export Control Act

(i) Prospective Purchaser: Korea

(ii) Total Estimated Value:

Major Defense Equipment*	$ 35 million
Other	$ 10 million
TOTAL	$ 45 million

(iii) Description of Articles or Services Offered: Two hundred STINGER RMP missiles less reprogrammable modules (STINGER RMP (-)), 48 fly-to-buy STINGER missiles, 40 weapon rounds, 40 gripstock control group guided missile launchers, Interrogator Friend or Foe, STINGER Night Sight, support equipment, spare and repair parts, publications and technical data, personnel training and training equipment, U.S. Government and contractor engineering and logistics personnel services, U.S. Government Quality Assurance Teams (QAT), and other related elements of logistics support.

(iv) Military Department: Army (JBB, Amendment 1; YRS, Amendment 1; and BRJ, Amendment 1)

(v) Sales Commission, Fee, etc., Paid, Offered, or Agreed to be Paid: none

(vi) Sensitivity of Technology Contained in the Defense Article or Defense Services Proposed to be Sold: See Annex attached

(vii) Date Report Delivered to Congress: 03 SEP 1997

* as defined in Section 47(6) of the Arms Export Control Act.

POLICY JUSTIFICATION

Korea - STINGER-RMP Missile System

The Government of Korea has requested the purchase of 200 STINGER RMP missiles less reprogrammable modules (STINGER RMP (-)), 48 fly-to-buy STINGER missiles, 40 weapon rounds, 40 gripstock control group guided missile launchers, Interrogator Friend or Foe, STINGER Night Sight, support equipment, spare and repair parts, publications and technical data, personnel training and training equipment, U.S. Government and contractor engineering and logistics personnel services, U.S. Government Quality Assurance Teams (QAT), and other related elements of logistics support. The estimated cost is $45 million.

This sale will contribute to the foreign policy and national security of the United States by helping to improve the security of a friendly country which has been and continues to be an important force for political stability and economic progress in the Northeast Asia.

This sale will enable the Korean Air Force and Korean Navy to develop defensive capabilities to protect from unwarranted aggression from the air as well as enhance its interoperability with U.S. forces. Korea will have no difficulty absorbing these missiles into its armed forces.

The sale of this equipment and support will not affect the basic military balance in the region.

The prime contractor will be Hughes Missile System Company, Tucson, Arizona. One or more proposed offset agreements may be related to this proposed sale.

Implementation of this sale will require the assignment of three U.S. Government Quality Assurance Teams to Korea for two weeks to assist in the delivery and deployment of the missiles. There will be five U.S. Government personnel and two contractor representatives for one week intervals twice annually to participate in program management and technical reviews. A team of two U.S. Government personnel will be deployed for two week intervals for six training classes.

There will be no adverse impact on U.S. defense readiness as a result of this sale.

Transmittal No. 97-42

Notice of Proposed Issuance of Letter of Offer
Pursuant to Section 36(b)(1)
of the Arms Export Control Act

Annex
Item No. vi

(vi) Sensitivity of Technology:

1. The STINGER RMP missile system less reprogrammable module (STINGER RMP (-)), gripstock, hardware, software and documentation contain sensitive technology and are classified Confidential. The guidance section of the missile and tracking head trainer contain highly sensitive technology and are classified Confidential. The AN/PPX-3B Identification Friend or Foe (IFF) system, technical manuals, and specifications are classified Confidential.

2. Missile system hardware and fire unit components contain sensitive/critical technologies. STINGER critical technology is primarily in the area of design and production know-how and not end-items. This sensitive/critical technology is inherent in the hybrid microcircuit assemblies, microprocessors, magnetic and amorphous metals, purification, firmware, printed circuit boards, laser range finder, dual detector assembly, detector filters, automatic text and associated computer software, optical coatings, ultraviolet sensors, semi-conductor detectors, infrared band sensors, equipment operating instructions, warhead components seeker assembly and the Identification Friend or Foe (IFF) system.

3. Information on vulnerability to electronic countermeasures and counter-countermeasures, system performance capabilities and effectiveness, and test data are classified up to Secret.

4. Loss of this hardware and/or data could permit development of information leading to the exploitation of countermeasures. Therefore, if a technologically capable adversary were to obtain these devices, the missile system could be compromised through reverse engineering techniques which could defeat the weapon systems effectiveness.

[FR Doc. 97–24292 Filed 9–12–97; 8:45 am]
BILLING CODE 5000–04–C

DEPARTMENT OF DEFENSE

Office of the Secretary

[Transmittal No. 97–42]

36(b)(1) Arms Sales Notification

AGENCY: Department of Defense, Defense Security Assistance Agency.

ACTION: Notice.

SUMMARY: The Department of Defense is publishing the unclassified text of a section 36(b)(1) arms sales notification. This is published to fulfill the requirements of section 155 of Public Law 104–164 dated 21 July 1996.

FOR FURTHER INFORMATION CONTACT: Ms. J. Hurd, DSAA/COMPT/CPD, (703) 604–6575.

The following is a copy of a letter to the Speaker of the House of Representatives, Transmittal 97–42, with attached transmittal, policy justification, and sensitivity of technology pages.

Dated: September 9, 1997.

L.M. Bynum,

Alternate OSD Federal Register Liaison Officer, Department of Defense.

BILLING CODE 5000–04–M

DEFENSE SECURITY ASSISTANCE AGENCY

WASHINGTON, DC 20301-2800

03 SEP 1997

In reply refer to:
I-51550/97

Honorable Newt Gingrich
Speaker of the House of
Representatives
Washington, D.C. 20515-6501

Dear Mr. Speaker:

Pursuant to the reporting requirements of Section 36(b)(1) of the Arms Export Control Act, we are forwarding herewith Transmittal No. 97-41, concerning the Department of the Army's proposed Letter(s) of Offer and Acceptance (LOA) to Egypt for defense articles and services estimated to cost $149 million. Soon after this letter is delivered to your office, we plan to notify the news media.

Sincerely,

MICHAEL S. DAVISON, JR.
LIEUTENANT GENERAL, USA
DIRECTOR

Attachments

Same ltr to: House Committee on International Relations
Senate Committee on Appropriations
Senate Committee on Foreign Relations
House Committee on National Security
Senate Committee on Armed Services
House Committee on Appropriations

Transmittal No. 97-41

Notice of Proposed Issuance of Letter of Offer
Pursuant to Section 36(b)(1)
of the Arms Export Control Act

(i) Prospective Purchaser: Egypt

(ii) Total Estimated Value:

Major Defense Equipment*	$110 million
Other	$ 39 million
TOTAL	$149 million

(iii) Description of Articles or Services Offered:
Four CH-47D CHINOOK helicopters with engines, spare and repair parts, support equipment, publications and technical data, communications equipment, maintenance, personnel training and training equipment, U.S. Government Quality Assurance Team, field service representatives, contractor engineering and technical support services, preparation of aircraft for shipment, and other related elements of logistics support.

(iv) Military Department: Army (JBK)

(v) Sales Commission, Fee, etc., Paid, Offered, or Agreed to be Paid: none

(vi) Sensitivity of Technology Contained in the Defense Article or Defense Services Proposed to be Sold:
See Annex attached

(vii) Date Report Delivered to Congress: 03 SEP 1997

* as defined in Section 47(6) of the Arms Export Control Act.

POLICY JUSTIFICATION

Egypt - CH-47D CHINOOK Helicopters

The Government of Egypt has requested the purchase of four CH-47D CHINOOK helicopters with engines, spare and repair parts, support equipment, publications and technical data, communications equipment, maintenance, personnel training and training equipment, U.S. Government Quality Assurance Team, field service representatives, contractor engineering and technical support services, preparation of aircraft for shipment, and other related elements of logistics support. The estimated cost is $149 million.

This sale will contribute to the foreign policy of the United States by helping Egypt to improve its security while pursuing a just and permanent peace in the region.

The Egyptian Armed Forces will use these helicopters for troop transport and logistics support. Egypt, which already has CHINOOK helicopters in its inventory, will have no difficulty absorbing the additional helicopters.

The sale of this equipment and support will not affect the basic military balance in the region.

The prime contractor will be Boeing Helicopter Company, Philadelphia, Pennsylvania. There are no offset agreements proposed to be entered into in connection with this potential sale.

A U.S. contractor field service representative will be required in Egypt for one year and additional one week for four years during the delivery of the helicopters. Up to eight U.S. Government Quality Assurance Team will be required for one week.

There will be no adverse impact on U.S. defense readiness as a result of this sale.

Transmittal No. 97-41

Notice of Proposed Issuance of Letter of Offer
Pursuant to Section 36(b)(1)
of the Arms Export Control Act

Annex
Item No. vi

(vi) Sensitivity of Technology:

1. The CH-47D CHINOOK Helicopter includes the following classified or sensitive components:

a. Chaff-flare Dispenser (M130) - a multi-purpose system which dispenses decoys to confuse threat radars and missile IR seekers. Radar cross section and frequency coverage are sensitive elements. Hardware is Unclassified. Technical publications for authorized maintenance levels are Unclassified. Aircraft optimization is the critical element; reverse engineering is not a major concern.

b. Radar Warning Receiver AN/APR-39A(V)1 - provides warning of a radar directed air defense threat to permit appropriate countermeasures. Hardware is classified Confidential. Technical manuals for the maintenance levels are classified Confidential. Technical performance data are classified Secret. Aircraft optimization is the critical element. Reverse engineering is not a major concern.

c. Laser Detecting Set AN/AVR-2 - is a passive laser warning system which receives, processes and displays threat information result from other aircraft illuminators, laser range finders or laser guided weapons. Hardware is classified Confidential. Reverse engineering is not a major concern.

d. Missile Approach Detector AN/ALQ-156(V)1 - is a an airborne radar system which provides infrared homing protection to the aircraft by detecting the approach of an anti-aircraft missile. Hardware is classified Confidential. Releasable technical manuals for operation and maintenance are classified Secret. Reverse engineering is not a major concern.

2. If a technologically advanced adversary were to obtain knowledge of the specific hardware in this sale, the information could be used to develop countermeasures which might reduce weapon system effectiveness or be used in the development of a system with similar or advanced capabilities.

3. A determination has been made that the recipient country can provide substantially the same degree of protection for the sensitive technology being released as the U.S. Government. This sale is necessary in furtherance of the U.S. foreign policy and national security objectives outlined in the Policy Justification.

[FR Doc. 97–24293 Filed 9–12–97; 8:45 am]
BILLING CODE 5000–04–C

DEPARTMENT OF DEFENSE

Office of the Secretary

Availability of the DoD Policy on Responsibility for Additional Environmental Cleanup After Transfer of Real Property

AGENCY: Office of the Deputy Under Secretary of Defense (Environmental Security), DoD.

ACTION: Notice of availability.

SUMMARY: Notice is hereby given of the release of the DoD Policy on Responsibility for Additional Environmental Cleanup after Transfer. This policy, signed on July 25, 1997, by Mr. R. Noel Longuemare, Acting Under Secretary of Defense (Acquisition and Technology), describes the circumstances under which DoD would perform additional cleanup on DoD property that is transferred by deed to any person or entity outside the federal government. The policy is available in the Publications section of the DoD Environmental Cleanup Homepage on the World Wide Web. The internet address for the homepage is http://www.dtic.mil/envirodod/.

FOR FURTHER INFORMATION CONTACT: Mr. Shah Choudhury, Office of the Deputy Under Secretary of Defense (Environmental Security), 3400 Defense Pentagon, Washington, DC 20301–3400; telephone (703) 697–7475; e-mail choudhsa@acq.osd.mil.

Dated: September 9, 1997.

L.M. Bynum,

Alternate OSD Federal Register Liaison Officer, Department of Defense.

[FR Doc. 97–24282 Filed 9–12–97; 8:45 am]

BILLING CODE 5000–04–M

DEPARTMENT OF DEFENSE

Office of the Secretary

List of Institutions of Higher Education Ineligible for Federal Funds

AGENCY: Department of Defense.

ACTION: Notice.

SUMMARY: This document is published to identify institutions of higher education that are ineligible for contracts and grants by reason of a determination by the Secretary of Defense that the institution prevents military recruiter access to the campus or students or maintains a policy against ROTC. It also implements the requirements set forth in the Omnibus Consolidated Appropriations Act of 1997 and 32 CFR Part 216. The institutions of higher education so identified are:

Washington College of Law of American University, Washington, DC
Willamette University College of Law, Salem, Oregon
William Mitchell College of Law, St. Paul, Minnesota

Recently, officials from the following institutions of higher education reported modifications to school policies sufficient to merit removal from the list of ineligible schools.

University of Oregon School of Law, Eugene, Oregon
St. Mary's University School of Law, San Antonio, Texas

The Omnibus Consolidated Appropriations Act of 1997 provides that schools prohibited by state laws or court rulings from providing the requisite degree of access for ROTC or military recruiting would not be denied funding prior to one year following the effective date of that law (i.e., not until March 29, 1998). However, that provision applies only to funds from agencies other than the Department of Defense, which is bound by provisions of the National Defense Authorization Acts for Fiscal Years 1995 and 1996. Therefore, the Secretary of Defense has determined that the following institutions of higher education prevent recruiter access to campuses, students, or student information and are ineligible for DoD contracts and grants.

Asnuntuck Community-Technical College, Enfield, Connecticut
Capital Community-Technical College, Hartford, Connecticut
Central Connecticut State University, New Britain, Connecticut
Charter Oak State College, Newington, Connecticut
Connecticut Community-Technical College, Winsted, Connecticut
Eastern Connecticut State University, Willimantic, Connecticut
Gateway Community-Technical College, North Haven, Connecticut
Housatonic Community-Technical College, Bridgeport, Connecticut
Manchester Community-Technical College, Manchester, Connecticut
Middlesex Community-Technical College, Middletown, Connecticut
Naugatuck Community-Technical College, Waterbury, Connecticut
Norwalk Community-Technical College, Norwalk, Connecticut
Quinebaug Valley Community-Technical College, Danielson, Connecticut
Southern Connecticut State University, New Haven, Connecticut
Three Rivers Community-Technical College, Norwich, Connecticut
Tunxis Community-Technical College, Farmington, Connecticut
Western Connecticut State University, Danbury, Connecticut

ADDRESSES: Director for Accession Policy, Office of the Assistant Secretary of Defense for Force Management Policy, 4000 Defense Pentagon, Washington, DC 20301–4000.

FOR FURTHER INFORMATION CONTACT: William J. Carr, (703) 697–8444.

SUPPLEMENTARY INFORMATION: On April 8, 1997 (62 FR 16694), the Department of Defense published 32 CFR part 216 as an interim rule. This rule and the Omnibus Consolidated Appropriations Act of 1997, requires the Department of Defense semi-annually to publish a list of the institutions of higher education ineligible for Federal funds. 32 CFR part 216 and the Secretary of Defense under 108 Stat. 2663, 10 U.S.C. 983, and 110 Stat. 3009 and/or this part identifies institutions of higher education that have a policy or practice that either prohibits, or in effect prevents, the Secretary of Defense from obtaining, for military recruiting purposes, entry to campus, access to students on campuses, access to directory information on students or that has an anti-ROTC policy. On August 28, 1997 (62 FR 45631), the Department of Defense published a list of the institutions of higher education ineligible for Federal Funding; this listing updates and supersedes that listing.

Dated: September 9, 1997.

L.M. Bynum,

Alternate OSD Federal Register Liaison Officer, Department of Defense.

[FR Doc. 97–24283 Filed 9–12–97; 8:45 am]

BILLING CODE 5000–04–M

DEPARTMENT OF DEFENSE

Department of the Army

Privacy Act of 1974; System of Records Notice

AGENCY: Department of the Army, DOD.

ACTION: Notice to amend record systems.

SUMMARY:

The Department of the Army proposes to amend the preamble to the Army's compilation of Privacy Act systems of records notices. The amendment consists of deleting the *For more information contact:* paragraph, and adding two new paragraphs.

EFFECTIVE DATE: September 15, 1997.

ADDRESSES: Send comments to the Privacy Act Officer, Records Management Program Division, U.S.

Army Total Personnel Command, ATTN: TAPC-PDR-P, Stop C55, Ft. Belvoir, VA 22060–5576.

FOR FURTHER INFORMATION CONTACT: Ms. Janice Thornton at (703) 806–4390 or DSN 656–4390.

SUPPLEMENTARY INFORMATION: The Department of the Army's record system notices for records systems subject to the Privacy Act of 1974 (5 U.S.C. 552a), as amended, have been published in the **Federal Register** and are available from the address above.

The Department of the Army proposes to amend the preamble to the Army's compilation of Privacy Act systems of records notices. The amendment consists of deleting the *For more information contact:* paragraph, and adding two new paragraphs as follows.

Dated: September 9, 1997.

L. M. Bynum,

Alternate OSD Federal Register Liaison Officer, Department of Defense.

* * * * *

For Further Assistance:

Any questions should be addressed to the Privacy Act Officer, Records Management Program Division, U.S. Army Total Personnel Command, ATTN: TAPC-PDR-P, Stop C55, Ft. Belvoir, VA 22060–5576.

Point of Contact:

Ms. Janice Thornton at (703) 806–4390 or DSN 656–4390.

* * * * *

[FR Doc. 97–24284 Filed 9–12–97; 8:45 am]

BILLING CODE 5000–04–F

DEPARTMENT OF DEFENSE

Department of the Navy

Notice of Intent To Prepare a Joint Environmental Impact Statement/ Environmental Impact Report (EIS/EIR) for the Proposed Disposal and Reuse of the Fleet and Industrial Supply Center, Naval Fuel Depot Point Molate, Richmond, CA

SUMMARY: Pursuant to Section 102(2)(c) of the National Environmental Policy Act (NEPA) of 1969 as implemented by the Council on Environmental Quality regulations (40 CFR parts 1500–1508), and the California Environmental Quality Act (CEQA), the Department of the Navy in coordination with the City of Richmond is preparing a joint Environmental Impact Statement/ Environmental Impact Report (EIS/EIR) for the proposed disposal and reuse of the Fleet and Industrial Supply Center, Naval Fuel Depot Point Molate (NFD Pt. Molate), Richmond, California. The Navy will be the lead agency for NEPA documentation and the City of Richmond will be the lead agency for CEQA documentation.

The Defense Base Closure and Realignment Act (Pub. L. 101–510) of 1990, as implemented by the base closure process of 1995, directed the Navy to close the NFD Pt. Molate. Pub. L. 102–484, Section 2834, as amended by Pub. L. 104–106, Section 2867, permits the Navy to dispose of NFD Pt. Molate to the City of Richmond.

Background

NFD Pt. Molate is within the jurisdiction of the City of Richmond and consists of 419 acres of land on the northeast shoreline of San Pablo Bay. The property includes several large underground storage tanks, the Winehaven historic district listed on the National Register of Historic Places, and administration and support buildings. The joint EIS/EIR will address Navy disposal of the property and the potential impacts associated with three community reuse alternatives and a ''no action'' alternative. The City of Richmond Blue Ribbon Advisory Committee developed the Point Molate Reuse Plan which identifies a mixture of land-uses, and serves as a guide to develop the three community reuse alternatives. The reuse alternatives expected to be evaluated in the EIS/EIR are: Mixed Use/Historic, Industrial/ Commercial, and Recreational/Historic. The ''No Action'' alternative would retain NFD Pt. Molate as a closed facility remaining in federal caretaker status.

The Mixed Use/Historic Alternative would include development of publicly oriented uses such as a shoreline park, trails, ballfields, public market/plaza, amphitheater, promenade, and light industrial and commercial uses such as incubator businesses, retreat and conference center, bed and breakfast, live/work space, and restaurants. That alternative also includes single- and multi-family residential uses, a heliport, ferry service and a winery. The Industrial/Commercial Alternative would include some of the publicly oriented uses listed above, but would develop light industrial and warehouse facilities on sites designated for residential development in the Mixed Use/Historic Alternative. The Recreational/Historic Alternative introduces gardens, small lakes, golf course, pier developments, environmental science center, wetlands and wildlife habitat, and a medium sized hotel in an addition to some of the other publicly oriented and recreational land-uses listed above.

The EIS/EIR will evaluate the potential for environmental impacts to traffic conditions, air quality, biological resources, cultural resources, utilities, and other environmental issues identified through this scoping process.

ADDRESSES: The Department of the Navy is initiating a scoping process for the purpose of determing the scope of issues to be addressed and for identifying significant issues relative to this proposed action. A public meeting to receive oral comments from the public will be held on Wednesday, October 1, 1997, at 6:00 pm, at 2600 Barrett Avenue, City of Richmond Council Chambers. The Navy and the City of Richmond representatives will briefly summarize the reuse planning and environmental impact assessment processes, and will then solicit public comments to identify the scope of environmental impact analysis. It is important that federal, state, and local agencies, and interested individuals are present or represented in the scoping process to assist the Navy and the City of Richmond in evaluating the range of issues and reuse alternatives to be addressed. In the interest of allowing everyone a chance to participate, speakers will be requested to limit their oral comments to five (5) minutes. Written comments or questions regarding the scoping process and/or EIS/EIR should be postmarked no later than Monday, October 20, 1997 and sent to the following addressses.

FOR FURTHER INFORMATION CONTACT: Ms. Noreen Roster (Code 703), Engineering Field Activity West, Naval Facilities Engineering Command, 900 Commodore Drive, San Bruno, California 94066–5006, telephone (415) 244–3021, fax (415) 244–3206. For information concerning the EIR, please contact Ms. Natalia Lawrence or Ms. Nancy Kaufman, Planning Department, the City of Richmond, California, telephone (510) 620–6706, fax (510) 620–6858. For further information regarding the Point Molate Reuse Plan, please contact Ms. Patricia Jones, Office of the City Manager at (510) 620–6952, fax (510) 620–6542, or Ms. Natalia Lawrence or Ms. Nancy Kaufman, Planning Department.

Dated: September 10, 1997.

Michael D. Sutton,

LCDR, JAGC, USN, Federal Register Liaison Officer.

[FR Doc. 97–24394 Filed 9–12–97; 8:45 am]

BILLING CODE 3810–FF–P

DEPARTMENT OF DEFENSE

Defense Special Weapons Agency

Privacy Act of 1974; System of Records

AGENCY: Defense Special Weapons Agency, DOD.

ACTION: Notice to amend a system of records.

SUMMARY: The Defense Special Weapons Agency is amending an entry in a system of records notice subject to the Privacy Act of 1974 (5 U.S.C. 552a), as amended. The system of records notice is identified as HDSWA 017, entitled Voluntary Leave Sharing Program Records published on March 24, 1997, at 62 FR 13873. Under Routine uses, the third paragraph, second line, fourth word should read 'DSWA's'.

DATES: This action will be effective September 15, 1997.

ADDRESSES: Send comments to General Counsel, Defense Special Weapons Agency, 6801 Telegraph Road, Alexandria, VA 22310–3398.

FOR FURTHER INFORMATION CONTACT: Ms. Sandy Barker at (703) 325–7681.

SUPPLEMENTARY INFORMATION: The Defense Special Weapons Agency notices for systems of records subject to the Privacy Act of 1974 (5 U.S.C. 552a), as amended, have been published in the **Federal Register** and are available from the address above.

The Defense Special Weapons Agency is amending an entry in a system of records notice subject to the Privacy Act of 1974 (5 U.S.C. 552a), as amended. The system of records notice is identified as HDSWA 017, entitled Voluntary Leave Sharing Program Records published on March 24, 1997, at 62 FR 13873. Under Routine uses, the third paragraph, second line, fourth word should read 'DSWA's'.

Dated: September 9, 1997.

L.M. Bynum,

Alternate OSD Federal Register Liaison Officer, Department of Defense.

[FR Doc. 97–24295 Filed 9–12–97; 8:45 am]

BILLING CODE 5000–04–F

DEPARTMENT OF DEFENSE

Department of the Navy

Notice of Public Hearing for the Draft Environmental Impact Statement/ Environmental Impact Report for the Disposal and Reuse of Certain Real Properties at Naval Training Center, San Diego, CA

SUMMARY: Pursuant to the Council on Environmental Quality regulations (40 CFR Parts 1500–1508) implementing the procedural provisions of the National Environmental Policy Act, and pursuant to the California Environmental Quality Act (California Public Resources Code Section 21000, *et seq.*), the Department of the Navy and the City of San Diego have prepared and filed with the U.S. Environmental Protection Agency a joint Draft Environmental Impact Statement/Environmental Impact Report (DEIS/EIR) for the disposal and reuse of certain real properties at Naval Training Center (NTC), San Diego, California.

A Notice of Intent (NOI) for the DEIS/EIR was published in the **Federal Register** on 15 May 1996. A public scoping meeting for the proposed project was held on 11 June 1996 at Naval Training Center, San Diego, California.

Under the Defense Base Closure and Realignment Act of 1990, the 1993 Defense Base Closure and Realignment commission recommended that NTC San Diego be closed as part of the nationwide military force reduction. The proposed federal action involves the disposal of land, buildings, and infrastructure of NTC San Diego for subsequent reuse. Since 1993, when the federal Base Closure and Realignment process directed closure of NTC San Diego, the City of San Diego and the NTC Reuse Planning Committee have been involved in a process to determine how the military base could be used. The Department of the Navy recognizes the San Diego City Council as the local reuse authority.

The environmental effects of five conceptual land use development alternatives (reuse alternatives) and the No-Action Alternative have been evaluated in the DEIS/EIR. Each of the alternatives evaluates proposed uses for approximately 429 acres of NTC San Diego considered ''surplus'' and subject to the disposal and reuse action. Proposed land uses include: residential; educational (reuse of and new classroom and laboratory facilities); active and passive recreational open space (e.g., trail and open space along the existing boat channel, park land, and reuse of the golf course); and retail and cultural uses, galleries, and exhibit space in the historic core of the site. Other alternative land uses being considered include airport expansion, hotel development, and a public safety institute.

No decision on the proposed action will be made until the National Environmental Policy Act process has been completed.

The DEIS/EIR has been distributed to various federal, state, and local agencies, local groups, elected officials, special interest groups, and individuals. The DEIS/EIR is available for review at the following libraries:

—City of San Diego Central Library, 820 E Street, San Diego, CA 92101
—City of San Diego Public Library, Ocean Beach Branch, 4801 Santa Monica Ave., San Diego, CA 92107
—City of San Diego Public Library, Point Loma Branch, 2130 Poinsettia Dr., San Diego, CA 92107
—Pacific Beach Public Library, 4275 Cass Street, San Diego, CA 92109.

ADDRESSES: The Navy will conduct a public hearing on Tuesday, September 30, 1997, at 7:00 p.m., at the Naval Training Support Center, Building 623, Naval Training Center, San Diego, California to inform the public of the Draft EIS/EIR findings and to solicit comments. Federal, state and local agencies, and interested individuals are invited to be present or represented at the hearing. Oral comments will be heard and transcribed by a stenographer. To assure accuracy of the record, all comments should be submitted in writing. All comments, both oral and written, will become part of the public record in the study. In the interest of available time, each speaker will be asked to limit oral comments to five minutes. Longer comments should be summarized at the public hearing and submitted in writing either at the hearing or mailed to the address listed below.

FOR FURTHER INFORMATION CONTACT: Please provide your written comments by October 14, 1997 to Mr. Robert Montana, Southwest Division, Naval Facilities Engineering Command, 1420 Kettner Boulevard, Suite 501, San Diego, California 92101–2040, telephone (619) 532–2004 ext. 43, fax (619) 532–2075; or Mr. Scott Vurbeff, City of San Diego, 202 C Street, San Diego, California 92101, telephone (619) 236–6947, fax (619) 236–6620.

Dated: September 10, 1997.

Michael D. Sutton,

LCDR, JAGC, USN, Federal Register Liaison Officer.

[FR Doc. 97–24393 Filed 9–12–97; 8:45 am]

BILLING CODE 3810–FF–P

DEPARTMENT OF DEFENSE

Defense Logistics Agency

Privacy Act of 1974; Notice to Amend Records Systems

AGENCY: Defense Logistics Agency, DOD.

ACTION: Notice to amend records systems.

SUMMARY: The Defense Logistics Agency proposes to amend all systems of records notices in its inventory of record systems subject to the Privacy Act of 1974 (5 U.S.C. 552a), as amended. The amendment consists of changing the entry under the Contesting record procedures category to a uniform statement.

The entry will now read as 'The DLA rules for accessing records, for contesting contents and appealing initial agency determinations are contained in DLA Regulation 5400.21, 32 CFR part 323, or may be obtained from the Privacy Act Officer, Headquarters, Defense Logistics Agency, ATTN: CAAR, 8725 John J. Kingman Road, Suite 2533, Fort Belvoir, VA 22060–6221.'

DATES: The amendment will be effective on September 15, 1997.

ADDRESSES: Send comments to the Privacy Act Officer, Headquarters, Defense Logistics Agency, ATTN: CAAR, 8725 John J. Kingman Road, Suite 2533, Fort Belvoir, VA 22060–6221.

FOR FURTHER INFORMATION CONTACT: Ms. Susan Salus at (703) 767–6183.

SUPPLEMENTARY INFORMATION: The Defense Logistics Agency notices for systems of records subject to the Privacy Act of 1974 (5 U.S.C. 552a), as amended, have been published in the **Federal Register** and are available from the address above.

The specific change to the record systems being amended are set forth below. The proposed amendments are not within the purview of subsection (r) of the Privacy Act of 1974, (5 U.S.C. 552a), as amended, which requires the submission of a new or altered systems report.

The amendment consists of changing the entry under the Contesting record procedures category to a uniform statement. The entry will now read as 'The DLA rules for accessing records, for contesting contents and appealing initial agency determinations are contained in DLA Regulation 5400.21, 32 CFR part 323, or may be obtained from the Privacy Act Officer, Headquarters, Defense Logistics Agency, ATTN: CAAR, 8725 John J. Kingman Road, Suite 2533, Fort Belvoir, VA 22060–6221.'

Dated: September 9, 1997.

L.M. Bynum,

Alternate OSD Federal Register Liaison Officer, Department of Defense.

[FR Doc. 97–24294 Filed 9–12–97; 8:45 am]

BILLING CODE 5000–04–F

DEPARTMENT OF DEFENSE

Department of the Navy

Notice of Government-Owned Inventions; Availability for Licensing

SUMMARY: The inventions listed below are assigned to the United States Government as represented by the Secretary of the Navy and are made available for licensing by the Department of the Navy.

Copies of patents cited are available from the Commissioner of Patents and Trademarks, Washington, D.C. 20231, for $3.00 each. Requests for copies of patents must include the patent number.

Copies of patent applications cited are available from the National Technical Information Service (NTIS), Springfield, Virginia 22161 for $6.95 each ($10.95 outside North American Continent). Requests for copies of patent applications must include the patent application serial number. Claims are deleted from the copies of patent applications sold to avoid premature disclosure.

The following patents and patent applications are available for licensing: Patent 5,359,746: RAMP JUNCTION; filed 12 December 1991; patented 1 November 1994.// Patent 5,384,458: PHOTONIC ELECTROMAGNETIC FIELD SENSOR FOR USE IN A MISSILE; filed 1 June 1993; patented 24 January 1995.//Patent 5,389,782: OPTICALLY POWERED AMPLIFIER USED BY AN ELECTROMAGNETIC FIELD SENSOR TO AMPLIFY AN ELECTRICAL SIGNAL FROM AN ANTENNA; filed 13 May 1994; patented 14 February 1995.//Patent 5,389,937: WEDGE FEED SYSTEM FOR WIDEBAND OPERATION OF MICROSTRIP ANTENNAS; filed 1 May 1984; patented 14 February 1995.// Patent 5,415,246: GAS PROJECTION APPARATUS FOR USE IN PREVENTING THE THEFT OF AN AUTOMOBILE; filed 19 September 1994; patented 16 May 1995.//Patent 5,436,943: DIGITAL AUDIO SIGNAL PROCESSING CIRCUIT; filed 12 June 1992; patented 25 July 1995.//Patent 5,448,054: CIRCUIT FOR USE IN DETERMINING THE POSITION OF LIGHT INCIDENT ON A POSITION SENSING DETECTOR; filed 27 June 1994; patented 15 September 1995.// Patent 5,448,237: DIGITAL CIRCUIT FOR THE INTRODUCTION OF DITHER INTO AN ANALOG SIGNAL; filed 8 March 1994; patented 5 September 1995.//Patent 5,448,606: GRAY CODE COUNTER; filed 30 June 1993; patented 5 September 1995.//Patent 5,450,136: DECODER CIRCUIT FOR GENERATING A SYSTEM CLOCK SIGNAL PHASE LOCKED TO A RANGE TONE SIGNAL; filed 13 May 1994; patented 12 September 1995.//Patent 5,456,442: MOUNTING BRACKET FOR GLOBAL POSITIONING SYSTEM ANTENNA; filed 12 August 1993; patented 10 October 1995.//Patent 5,456,581: CONTROL SYSTEM FOR A MULTI-PISTON PUMP WITH SOLENOID VALVES FOR THE PRODUCTION OF CONSTANT OUTLET PRESSURE FLOW; filed 12 August 1994; patented 10 October 1995.//Patent 5,458,562: CIRCULATION ENHANCING APPARATUS; filed 13 June 1994; patented 17 October 1995.//Patent 5,458,865: ELECTRICAL COMPONENTS FORMED OF LANTHANIDE CHALCOGENIDES AND METHOD OF PREPARATION; filed 30 June 1993; patented 17 October 1995.// Patent 5,476,238: MULTIPLE STORES WEAPONS RAIL FOR USE WITH AN AIRCRAFT; filed 22 July 1994; patented 19 December 1995.//Patent 5,492,696: CONTROLLED RELEASE MICROSTRUCTURES; filed 17 June 1993; patented 20 February 1996.// Patent 5,510,790: DIGITAL CIRCUIT FOR THE INTRODUCTION OF DITHER INTO AN ANALOG SIGNAL; filed 25 April 1994; patented 23 April 1996.// Patent 5,513,713: STEERABLE DRILLHEAD; filed 25 January 1994; patented 7 May 1996.//Patent 5,530,443: DIGITAL CIRCUIT FOR THE INTRODUCTION OF DITHER INTO AN ANALOG SIGNAL; filed 2 September 1994; patented 25 June 1996.//Patent 5,561,676: COMPOUND-CAVITY, HIGH-POWER, MODELOCKED SEMICONDUCTOR LASER; filed 6 February 1995; patented 1 October 1996.//Patent 5,569,073: SYSTEM FOR THE REMOVAL AND DISPOSAL OF AIRBORNE CONTAMINANTS FROM AN OUTDOOR PAINT BOOTH; filed 15 March 1995; patented 29 October 1996.// /Patent 5,572,652: SYSTEM AND METHOD FOR MONITORING AND CONTROLLING ONE OR MORE COMPUTER SITES; filed 4 April 1994; patented 5 November 1996.//Patent 5,574,286: SOLAR-BLIND RADIATION DETECTOR; filed 30 June 1995; patented 12 November 1996.//Patent 5,574,451: DIGITAL CIRCUIT FOR THE INTRODUCTION OF DITHER INTO AN ANALOG SIGNAL; filed 8 February 1995; patented 12 November 1996.// Patent 5,574,460: MANUAL PROBE ACQUISITION SYSTEM; filed 3 February 1965; patented 12 November 1996.//Patent 5,575,888: SIDEWALL PASSIVATION BY OXIDATION DURING REFRACTORY-METAL PLASMA ETCHING; filed 14 April

1995; patented 19 November 1996.// Patent 5,587,597: SEMICONDUCTOR-ON-INSULATOR DEVICEINTERCONNECTS; filed 11 July 1991; patented 24 December 1996.// Patent 5,589,937: FIBER OPTIC SELF-MULTIPLEXING AMPLIFIED RING TRANSDUCER AND FORCE TRANSFER SENSOR WITH PRESSURE COMPENSATION; filed 2 May 1995; patented 31 December 1996.//Patent 5,591,057: HULL SUPPORTED STEERING AND REVERSING GEAR FOR LARGE WATERJETS; filed 14 September 1995; patented 7 January 1997.//Patent 5,591,969: INDUCTIVE DETECTOR FOR TIME-OF FLIGHT MASS SPECTROMETERS; filed 12 April 1995; patented 7 January 1997.// Patent 5,592,579: FIBER OPTIC CABLE SPLICE AND METHOD FOR PRODUCING SAME; filed 5 June 1996; patented 7 January 1997.//Patent 5,593,732: NONTOXIC ANTIFOULING SYSTEM; filed 28 April 1995; patented 14 January 1997.//Patent 5,593,736: PROCESS FOR MANUFACTURING A FIBER REINFORCED OPTIC MICROCABLE WITH A UV CURED RESIN; filed 26 May 1988; patented 14 January 1997.//Patent 5,594,195: MINIATURE, LOW POWER, ELECTROMECHANICAL SAFETY AND ARMING DEVICE; filed 17 March 1995; patented 14 January 1997.//Patent 5,596,090: ANTISENSE OLIGONUCLEOTIDES DIRECTED AGAINST HUMAN VCAM–1 RNA; filed 12 October 1993; patented 21 January 1997.//Patent 5,596,133: ROTATING PEEL FIXTURE; filed 23 August 1995; patented 21 January 1997.//Patent 5,596,405: METHOD OF AND APPARATUS FOR THE CONTINUOUS EMISSIONS MONITORING OF TOXIC AIRBORNE METALS; filed 3 October 1995; patented 21 January 1997.//Patent 5,596,943: APPARATUS AND METHOD FOR FLOATING A TOWED DEVICE FROM A SUBMERGED VEHICLE; filed 16 August 1995; patented 28 January 1997.//Patent 5,597,245: CAVITATION SUPPRESSING DUCTED PROPELLER SYSTEM; filed 13 August 1962; patented 28 January 1997./Patent 5,597,337: QUICK CHANGE FIN ASSEMBLY FOR BUOYANT TEST VEHICLES; filed 21 February 1995; patented 28 January 1997.//Patent 5,598,152: MINE SWEEPING SYSTEM FOR MAGNETIC AND NON-MAGNETIC MINES; filed 29 December 1994; patented 28 January 1997.//Patent 5,599,543: IMMUNOGENIC FOUR AMINO ACID EPITOPE AGAINST PLASMODIUM VIVAX; filed 9 March 1992; patented 4 February 1997.//Patent 5,599,703: IN VITRO AMPLIFICATION/ EXPANSION OF CD34+ STEM AND PROGENITOR CELLS; filed 28 October 1993; patented 4 February 1997.//Patent 5,599,75l: ALKALINE EARTH MODIFIED GERMANIUM SULFIDE GLASS; filed 28 February 1995; patented 4 February 1997.//Patent 5,600,060: APPARATUS AND METHOD FOR COMPUTING UNSTEADY FLOWS BY DIRECT SOLUTION OF THE VORTICITY EQUATION; filed 22 February 1996; patented 4 February 1997.//Patent 5,600,239: STRAIN SENSING SYSTEM; filed 16 June 1995; patented 4 February 1997.//Patent 5,600,241: VIBRATING-REED SUSCEPTOMETER FOR MEASURING ANISOTROPIC ASPECTS OF SUSCEPTIBILITY; filed 7 July 1995; patented 4 February 1997.//Patent 5,601,047: DUALCAVITATING HYDROFOIL STRUCTURES FOR MULTI-SPEED APPLICATIONS; filed 25 June 1996; patented 11 February 1997.//Patent 5,601,452: NON-ARCING CLAMP FOR AUTOMOTIVE BATTERY JUMPER CABLES; filed 3 October 1995; patented 11 February 1997.//Patent 5,601,867: METHOD AND APPARATUS FOR GENERATING FINGERPRINTS AND OTHER SKIN PRINTS; filed 22 June 1995; patented 11 February 1997./ /Patent 5,602,434: PULSE CONTROLLED MOTION CONVERSION SYSTEM FOR MAGNETOSTRICTIVE MOTOR; filed 31 March 1995; patented 11 February 1997.//Patent 5,602,801: UNDERWATER VEHICLE SONAR SYSTEM WITH EXTENDIBLE ARRAY; filed 6 December 1995; patented 11 February 1997.//Patent 5,603,278: BUOYANT TEST VEHICLE POLYMER EJECTION NOSE ASSEMBLY; filed 16 January 1996; patented 18 February 1997.//Patent 5,604,165: CrB2–NbB2/ A1203 AND CrB2–NbB2/SiC CERAMIC COMPOSITE MATERIALS; filed 13 June 1996; patented 18 February 1997.// Patent 5,604,629: DISCRETE VACUUM ULTRA VIOLET REFLECTIVE INTERFERENCE FILTER; 27 July 1993; patented 18 February 1997.//Patent 5,606,163: ALL-OPTICAL, RAPID READOUT, FIBER-COUPLED THERMOLUMINESCENT DOSIMETER SYSTEM; filed 11 January 1995; patented 25 February 1997.//Patent 5,606,214: SMART ACTUATOR FOR ACTIVE SURFACE CONTROL; filed 31 August 1995; patented 25 February 1997.//Patent 5,606,329: BUOYANT CABLE ANTENNA; filed 22 February 1996; patented 25 February 1997.// Patent 5,606,330: SUBMARINE ANTENNA POSITIONING ASSEMBLY; filed 22 May 1995; patented 25 February 1997.//Patent 5,606,533: DATA ACQUISITION SYSTEM AND METHOD; filed 14 April 1994; patented 25 February 1997.//Patent 5,606,929: NAVY PONTOON LOCKING SYSTEM; filed 8 July 1996; patented 4 March 1997.//Patent 5,607,329: INTEGRATED MOTOR/MARINE PROPULSOR WITH PERMANENT MAGNET BLADES; filed 21 December 1995; patented 4 March 1997.//Patent 5,608,321: METHOD AND APPARATUS FOR DETECTING TARGET SPECIES HAVING QUADRUPOLAR NUCLEI BY STOCHASTIC NUCLEAR QUADRUPOLE RESONANCE; filed 28 December 1995; patented 4 March 1997.//Patent 5,608,981: SINGLE SPRING BOLT LOCK AND CARTRIDGE EJECTOR; filed 14 August 1995; patented 11 March 1997.//Patent 5,609,942: PANEL HAVING CROSS-CORRUGATED SANDWICH CONSTRUCTION; filed 13 March 1995; patented 11 March 1997.//Patent 5,612,505: DUAL MODE WARHEAD; filed 25 August 1980; patented 18 March 1997.//Patent 5,613,456: MICROBUBBLE POSITIONING AND CONTROL SYSTEM; filed 28 July 1995; patented 25 March 1997.//Patent 5,614,790: AUTOMATIC ALARM FOR FLUORESCENT BLINKING; filed 9 June 1995; patented 25 March 1997.//Patent 5,614,910: MISS DISTANCE VECTOR SCORING SYSTEM; filed 28 July 1995; patented 25 March 1997.//Patent 5,615,175: PASSIVE DIRECTION FINDING DEVICE; filed 19 September 1995; patented 25 March 1997.//Patent 5,621,346: PROGRAMMABLE DATA MESSAGE GENERATION SYSTEM; filed 17 October 1995; patented 15 April 1997.//Patent 5,623,244: PILOT VEHICLE WHICH IS USEFUL FOR MONITORING HAZARDOUS CONDITIONS ON RAILROAD TRACKS; filed 9 September 1996; patented 22 April 1997.//Patent 5,624,264: MISSILE LAUNCH SIMULATOR; filed 29 September 1995; patented 29 April 1997.//Patent 5,624,577: DISPOSAL OF OIL SPILL CLEANUP COLLECTIONS; filed 1 December 1995; patented 29 April 1997.//Patent 5,625,752: ARTIFICIAL NEURAL SYSTEM WITH BINARY WEIGHTING BY EQUAL RESISTOR NETWORK; filed 17 June 1994; patented 29 April 1997.//Patent 5,627,508: PILOT VEHICLE WHICH IS USEFUL FOR MONITORING HAZARDOUS CONDITIONS ON RAILROAD TRACKS; filed 10 May 1996; patented 6 May 1997.//Patent 5,633,894: CIRCUIT FOR MODULATING A SINUSOIDAL WAVEFORM SIGNAL USING DIGITAL PULSE SHAPING; filed 26 January 1995; patented 27 May 1997.//Patent 5,636,180: SYSTEM FOR PREVENTING

BIOFOULING OF SURFACES EXPOSED TO WATER; filed 16 August 1995; patented 3 June 1997.//Patent application 07/518,604: CERAMIC MATERIAL; filed 2 May 1990.//Patent application 08/405,638: DIGITAL SIMULATION OF ORGANISMAL GROWTH; 17 March 1995.//Patent application 08/417,340: DISCRIMINATE REDUCTION DATA PROCESSOR; filed 5 April 1995.//Patent application 08/419,473: METERING SYSTEM FOR COMPRESSIBLE FLUIDS; filed 10 April 1995.//Patent application 08/449,162: REGULATED DISPENSING SYSTEM; filed 24 May 1995.//Patent application 08/515,878: ROTARY COMPRESSOR WITH PULSATION MINIMIZING DISCHARGE; filed 16 August 1995.//Patent application 08/521,384: SINTERING AIDS FOR PRODUCING BaO–A12O3–2SiO2 AND SrO–A12O3–2SiO2 CERAMIC MATERIALS; filed 26 July 1995.//Patent application 08/585,612: TYPE II QUANTUM WELL LASER WITH ENHANCED OPTICAL MATRIX ELEMENTS; filed 16 January 1996.//Patent application 08/605,251: OPTICAL SPECTRUM ANALYZER; filed 13 February 1996.//Patent application 08/627,816: AGILE WATER VEHICLE; filed 1 April 1996.//Patent application 08/637,000: LENGTH AND ELONGATION SENSOR; filed 18 April 1996.//Patent application 08/646,537: LACTIC ACID TREATMENT OF INP MATERIALS; filed 8 May 1996.//Patent application 08/655,789: FUEL SYSTEM ICING INHIBITOR AND DEICING COMPOSITION; filed 29 May 1996.//Patent application 08/656,528: METHOD AND APPARATUS FOR DETERMINING BOTH DENSITY AND ATOMIC NUMBER OF A MATERIAL COMPOSITION USING COMPTON SCATTERING; filed 31 May 1996.//Patent application 08/656,531: COMPLIANT ATTACHMENT; filed 31 May 1996.//Patent application 08/667,170: SHOULDER-LAUNCHED MULTI-PURPOSE ASSAULT WEAPON; filed 20 June 1996.//Patent application 08/668,489: MMIC RECEIVER SPECIFICATION; filed 31 May 1996.//Patent application 08/668,585: FITTING FOR FLEXIBLE FUEL BLADDER; filed 20 June 1996.//Patent application 08/673,762: CONTINUOUS FLUID ATOMIZATION OF MATERIALS IN A RAPIDLY SPINNING CUP; filed 14 June 1996.//Patent application 08/682,895: METHOD FOR DATA GAP COMPENSATION; filed 28 June 1996.//Patent application 08/684,836: LOW VELOCITY DETONATION TRAP FOR MONOPROPELLANT FUEL SYSTEMS; filed 24 June 1996.//Patent application 08/684,837: FUEL OXIDIZER EMULSION INJECTION SYSTEM; filed 24 June 1996.//Patent application 08/687,098: APPARATUS FOR DIAGNOSING SLEEP BREATHING DISORDERS; filed 10 July 1996.//Patent application 08/687,699: METHOD AND APPARATUS FOR PREDICTING THE EFFICACY OF CARDIOVERSION; filed 10 July 1996.//Patent application 08/693,816: SOFTWARE OBJECT FOR PROVIDING A DISPLAY OF A SCROLLING GRAPH; filed 22 July 1996.//Patent application 08/695,841: AIRCRAFT DETECTION SYSTEM; filed 5 August 1996.//Patent application 08/695,911: METHOD OF POSITIONING AND SECURING A TUBE ON AN ELONGATE SUPPORT; filed 12 August 1996.//Patent application 08/696,589: METHOD AND DEVICE FOR INSERTING A LINEAR ARRAY MODULE INTO LONG SMALL DIAMETER PRESSURE VESSELS; filed 24 July 1996.//Patent application 08/700,746: VARIABLE ORIFICE BALL VALVE; filed 30 July 1996.//Patent application 08/701,336: IMPROVED SUBMARINE DEPLOYED SEA-STATE SENSOR; filed 22 August 1996.//Patent application 08/702,299: SYSTEM AND METHOD FOR DETERMINING CLASS DISCRIMINATION FEATURES; filed 23 August 1996.//Patent application 08/702,300: SYSTEM AND METHOD FOR DETERMINING NODE FUNCTIONALITY IN ARTIFICIAL NEURAL NETWORKS; filed 23 August 1996.//Patent application 08/703,233: ELECTRONIC FIRING CIRCUIT; filed 21 August 1996.//Patent application 08/703,234: ELIMINATION OF SURFACE IRREGULARITIES ON THE WRAPAROUND WINDOW OF A TORPEDO NOSE ARRAY; filed 26 August 1996.//Patent application 08/706,591: SELF-PROPELLED WHEEL FOR WHEELED VEHICLES; filed 5 September 1996.//Patent application 08/706,593: SQUIRREL CAGE TYPE ELECTRIC MOTOR ROTOR ASSEMBLY; filed 5 September 1996.//Patent application 08/708,001: THERMAL STABILIZATION OF N,N-DINITRAMIDE SALTS; filed 26 August 1996.//Patent application 08/708,002: APPROXIMATION METHOD FOR WORKPLACE LAYOUT USING CONVEX POLYGON ENVELOPE; filed 27 August 1996.//Patent application 08/708,008: WORKPLACE LAYOUT METHOD USING CONVEX POLYGON ENVELOPE; filed 27 August 1996.//Patent application 08/708,422: METHOD AND APPARATUS FOR PHOTOBLEACHING PATTERNS IN IRRADIATED OPTICAL WAVEGUIDES; filed 9 September 1996.//Patent application 08/708,423: FIBER OPTIC HANDLING AND COATING FIXTURE; filed September 1996.//Patent application 08/709,624: METHOD AND APPARATUS FOR IRRADIATING PATTERNS IN OPTICAL WAVEGUIDES CONTAINING RADIATION SENSITIVE CONSTITUENTS; filed 9 September 1996.//Patent application 08/712,526: CABLE CONNECTOR ASSEMBLY; filed 11 September 1996.//Patent application 08/713,896: MODEL-BASED PROCESS FOR TRANSLATING TEST PROGRAMS; filed 13 September l996.//Patent application 08/715,263: SEALING RING AND SEAL ASSEMBLY AND METHOD FOR MAKING A SEAL ASSEMBLY; filed 16 September 1996.//Patent application 08/715,741: SYSTEM AND METHOD FOR COMPENSATING FOR DOPPLER SHIFTS IN SIGNALS BY DOWNSAMPLING; filed 5 September 1996.//Patent application 08/716,664: METHOD FOR MONITORING SURFACE STRESS; filed 27 August 1996.//Patent application 08/716,665: SYSTEM FOR MONITORING SURFACE STRESS AND OTHER CONDITIONS IN STRUCTURES; filed 27 August 1996.//Patent application 08/716,673: SYSTEM AND METHOD FOR STOCHASTIC CHARACTERIZATION OF A SIGNAL WITH FOUR EMBEDDED ORTHOGONAL MEASUREMENT DATA ITEMS; filed 13 September 1996.// Patent application 08/716,700: ROLLER SHAFT EXTRACTOR; filed 19 September 1996.// Patent application 08/721,846: FIBER BRAGG GRATINGS IN CHALCOGENIDE OR CHALCOHALID BASED INFRARED OPTICAL FIBERS; filed 30 September 1996.// Patent application 08/730,919: HIGHLY MANEUVERABLE UNDERWATER VEHICLE STATEMENT OF GOVERNMENT INTEREST; filed 10 October 1996.//Patent application 08/738,927: MOBILE X-RAY UNIT; filed 28 October 1996.//Patent application 08/748,584: THERMOSET POLYMERS MADE BY BLENDING POLY (CARBORANE-SILOXANE/SILANE-ACETYLENE) AND POLY (SILOXANE/SILANE-ACETYLENE); filed 13 November 1996.//Patent application 08/751,218: IR TRANSMITTING RARE EARTH GALLOGERMANATE GLASS-CERAMICS; filed 15 November 1996.//Patent application 08/757,415: MONOLITHIC PIEZOELECTRIC ACCELEROMETER; filed 27 November 1996.//Patent application 08/771,119: CERAMIC STRUCTURE WITH BACKFILLED CHANNELS; filed 20 December 1996.//Patent application 08/771,120: CHANNELED CERAMIC STRUCTURE AND PROCESS FOR MAKING SAME; filed 20 December

1996.//Patent application 08/787,720: CHEMICAL SENSOR USING TWO-DIMENSIONAL LENS ARRAY; filed 24 January 1997.//Patent application 08/787,721: ORGANIC/INORGANIC COMPOSITE WICKS FOR CAPILLARY PUMPED LOOPS BY SOL-GEL PROCESSING; filed 24 January 1997.//Patent application 08/791,305: METHOD AND APPARATUS FOR ABLATIVE BONDING USING A PULSED ELECTRON BEAM; filed 30 January 1997.//Patent application 08/794,979: BIOSENSOR USING MAGNETICALLY-DETECTED LABEL; filed 5 February 1997.

FOR FURTHER INFORMATION CONTACT: Mr. R.J. Erickson, Staff Patent Attorney, Office of Naval Research (Code OOCC), Arlington, VA 22217–5660, telephone (703) 696–4001.

Dated: September 5, 1997.

M.D. Sutton,

LCDR, JAGC, USN Federal Register Liaison Officer.

[FR Doc. 97–24296 Filed 9–12–97; 8:45 am]

BILLING CODE 3810–FF–P

DEPARTMENT OF ENERGY

Federal Energy Regulatory Commission

[FERC–523]

Proposed Information Collection and Request for Comments

September 10, 1997.

AGENCY: Federal Energy Regulatory Commission.

ACTION: Notice of proposed information collection and request for comments.

SUMMARY: In compliance with the requirements of Section 3506 (c)(2)(2)(a) of the Paperwork Reduction Act of 1995 (Pub. L. No. 104–13), the Federal Energy Regulatory Commission (Commission) is soliciting public comment on the specific aspects of the information collection described below.

DATES: Consideration will be given to comments submitted on or before November 14, 1997.

ADDRESSES: Copies of the proposed collection of information can be obtained from and written comments may be submitted to the Federal Energy Regulatory Commission, Attn: Michael Miller, Information Services Division, ED–12.4, 888 First Street N.E., Washington, D.C. 20426.

FOR FURTHER INFORMATION CONTACT: Michael Miller may be reached by telephone at (202) 208–1415, by fax at (202) 273–0873, and by e-mail at mmiller@ferc.fed.us.

SUPPLEMENTARY INFORMATION: The information collected under the requirements of FERC–523 ''Applications for Authorization of Issuance of Securities'' (OMB No. 1902–0043) is used by the Commission to implement the statutory provisions of Sections 19, 20 and 204 of the Federal Power (FPA), 16 U.S.C. 792–828c.

Under the FPA a public utility or licensee must obtain Commission authorization for the issuance of securities or the assumption of liabilities pursuant to the sections identified above. Public utilities or licensees are not permitted to issue securities or assume any obligations or liabilities as guarantor, indorser, or surety or otherwise in respect of any other security of another person, unless and until, they have submitted an application to the Commission who will in turn, issue an order authorizing assumption of the liability or issuance of securities. The information filed in applications to the Commission is used to determine the Commission's acceptance and/or rejection for granting authorization for either issuances of securities or assumptions of obligations or liabilities to licensees and public utilities. The Commission implements these filing requirements in the Code of Federal Regulations (CFR) under 18 CFR Parts 20 and 34, and §§ 131.43 and 131.50.

Action: The Commission is requesting a three-year extension of the current expiration date.

Burden Statement: Public Reporting burden for this collection is estimated as:

Number of respondents annually (1)	Number of responses per respondent (2)	Average burden hours per response (3)	Total annual burden hours (1)×(2)×(3)
60	1	110	6,600

Estimated cost burden to respondents: 6,600 hours divided by 2087 hours per year times $110,000 per year equals $347,868. The cost per respondent is equal to $5,798.

The reporting burden includes the total time, effort, or financial resources expended to generate, maintain, retain, disclose, or provide the information including: (1) reviewing instructions; (2) developing, acquiring, installing, and utilizing technology and systems for the purposes of collecting, validating verifying, processing, maintaining, disclosing and providing information; (3) adjusting the existing ways to comply with any previously applicable instructions and requirements: (4) training personnel to respond to a collection of information; (5) searching data sources; (6) completing and reviewing the collection of information; and (7) transmitting, or otherwise disclosing the information.

The estimate of cost for respondents is based upon salaries for professional and clerical support, as well as direct and indirect overhead costs. Direct costs include all costs directly attributable to providing this information, such as administrative costs and the cost for information technology. Indirect or overhead costs are costs incurred by an organization in support of its mission. These costs apply to activities which benefit the whole organization rather than any one particular function or activity.

Comments are invited on: (1) whether the proposed collection of information is necessary for the proper performance of the functions of the Commission, including whether whether the information will have practical utility; (2) the accuracy of the Commission's estimate of the burden of the proposed collection of information, including the validity of the methodology and assumptions used; (3) ways to enhance the quality, utility and clarity of the information to be collected; and (4) ways to minimize the burden of the collection of information on those who are to respond, including the use of appropriate automated, electronic mechanical, or other technological collection techniques or other forms of

information technology e.g. permitting electronic submission of responses.

Lois D. Cashell,

Secretary.

[FR Doc. 97–24355 Filed 9–12–97; 8:45 am]

BILLING CODE 6717–01–M

DEPARTMENT OF ENERGY

Federal Energy Regulatory Commission

[FERC Form 556]

Proposed Information Collection and Request for Comments

September 9, 1997.

AGENCY: Federal Energy Regulatory Commission.

ACTION: Notice of proposed information collection and request for comments.

SUMMARY: In compliance with the requirements of Section 3506(c)(2)(2)(a) of the Paperwork Reduction Act of 1995 (Pub. L. No. 104–13), the Federal Energy Regulatory Commission (Commission) is soliciting public comment on the specific aspects of the information collection described below.

DATES: Consideration will be given to comments submitted within 60 days of the publication of this notice.

ADDRESSES: Copies of the proposed collection of information can be obtained from and written comments may be submitted to the Federal Energy Regulatory Commission, Attn: Michael Miller, Information Services Division, ED–12.4, 888 First Street N.E., Washington, D.C. 20426.

FOR FURTHER INFORMATION CONTACT: Michael Miller may be reached by telephone at (202) 208–1415, by fax at (202) 273–0873, and by e-mail at mmiller@ferc.fed.us.

SUPPLEMENTARY INFORMATION: The information collected under the requirements of FERC Form 556 ''Cogeneration and Small Power Production'' (OMB No. 1902–0075) is used by the Commission to implement the statutory provisions of Section 3 of the Federal Act (EPA), 16 U.S.C. 792–828C, and Sections 201 and 210 of the Public Utility Regulatory Policies Act of 1978 (PURPA). The reporting requirements associated with FERC Form 556 require owners or operators of small power production or cogeneration facilities who seek qualifying status for these facilities to file an application to the Commission for certification as a qualifying facility (QF).

A primary objective of PURPA is the conservation of energy through efficient use of energy resources and facilities by energy facilities. One means of achieving this goal is to encourage production of production of electric power by cogeneration facilities which make use of reject heat associated with commercial or industrial processes, and by small power production facilities which use other wastes and renewable resources. PURPA, through establishment of various regulatory benefits, encourages the development of small power production facilities and cogeneration facilities which meet certain technical and corporate criteria. Facilities that meet these criteria are called QFs.

The purposes of FERC Form 556 are to: specify the certification procedures which must be followed by owners or operator of small power production and cogeneration facilities; specify the criteria which must be met; specify the information which must be submitted to FERC in order to obtain qualifying status; specify the PURPA benefits which are available to QFs to encourage small power production and cogeneration; and specify the requirements pertaining to PURPA implementation plans regarding the transaction obligations that electric utilities have with respect to QFs. Respondents comply with these requirements in order to obtain or retain a benefit. The Commission implements these filing requirements in the Code of Federal Regulations (CFR) under 18 CFR part 292.

Action: The Commission is requesting a three-year extension of the current expiration date.

Burden Statement: Public Reporting burden for this collection is estimated as:

Number of respondents annually (1)	Number of responses per respondents (2)	Average burden hours per response (3)	Total annual burden hours (1)×(2)×(3)
332	1	6	[1] 2,049

[1] approximate, includes application for Commission certification, PURPA implementation waiver filings, and notices for self-certification.

Estimated cost burden to respondents: 2,049 hours divided by 2087 hours per year times $110,000 per year equals $107,997. The cost per respondent is equal to $325.

The reporting burden includes the total time, effort, or financial resources expended to generate, maintain, retain, disclose, or provide the information including: (1) Reviewing instructions; (2) developing, acquiring, installing, and utilizing technology and systems for the purposes of collecting, validating verifying, processing, maintaining, disclosing and providing information; (3) adjusting the existing ways to comply with any previously applicable instructions and requirements; (4) training personnel to respond to a collection of information; (5) searching data resources; (6) completing and reviewing the collection of information; and (7) transmitting, or otherwise disclosing the information.

The estimate of cost for respondents is based upon salaries for professional and clerical support, as well as direct and indirect overhead costs. Direct costs include all costs directly attributable to providing this information, such as administrative costs and the cost for information technology. Indirect or overhead costs are costs incurred by an organization in support of its mission. These costs apply to activities which benefit the whole organization rather than any one particular function or activity.

Comments are invited on: (1) Whether the proposed collection of information is necessary for the proper performance of the functions of the Commission, including whether the information will have practical utility; (2) the accuracy of the Commission's estimate of the burden of the proposed collection of information, including the validity of the methodology and assumptions used; (3) ways to enhance the quality, utility and clarity of the information to be collected; and (4) ways to minimize the burden of the collection of information on those who are to respond, including the use of appropriate automated, electronic, mechanical, or other technological collection techniques or other forms of information technology e.g. permitting electronic submission of responses.

Lois D. Cashell,

Secretary.

[FR Doc. 97–24373 Filed 9–12–97; 8:45 am]

BILLING CODE 6717–01–M

DEPARTMENT OF ENERGY

Federal Energy Regulatory Commission

[Docket No. OA96–70–001]

Boston Edison Company; Notice of Filing

September 9, 1997.

Take notice that on July 9, 1997, Boston Edison Company of Boston, Massachusetts tendered for filing an index of its service agreements under its open-access transmission tariff pursuant to the Commission's order in Allegheny Power System, Inc., 80 FERC ¶61,143 (1997).

Boston Edison states that copies of this filing have been served on the affected customers and the Massachusetts Department of Public Utilities.

Any person desiring to be heard or to protest said filing should file a motion to intervene or protest with the Federal Energy Regulatory Commission, 888 First Street, N.E., Washington, D.C., 20426, in accordance with Rules 211 and 214 of the Commission's Rules of Practice and Procedure (18 CFR 385.211 and 18 CFR 385.214). All such motions or protests should be filed on or before September 19, 1997. Protests filed with the Commission will be considered by it in determining the appropriate action to be taken, but will not serve to make protestants parties to the proceeding. Any person wishing to become a party must file a motion to intervene. Copies of this filing are on file with the Commission and are available for public inspection.

Lois D. Cashell,

Secretary.

[FR Doc. 97–24361 Filed 9–12–97; 8:45 am]

BILLING CODE 6717–01–M

DEPARTMENT OF ENERGY

Federal Energy Regulatory Commission

[Docket No. TM98–1–123–000]

Crossroads Pipeline Company; Notice of Proposed Changes in FERC Gas Tariff

September 9, 1997.

Take notice that on September 3, 1997, Crossroads Pipeline Company (Crossroads) tendered for filing as part of its FERC Gas Tariff, Sixth Revised Tariff Sheet No. 6. Crossroads asserts that this filing is being made to comply with the Commission's notice of August 20, 1997 and Section 154.402 of the Commission's regulations.

Crossroads states that the purpose of the filing is to add an Annual Charge Adjustment (ACA) unit charge to its tariff. Crossroads requests an effective date of October 1, 1997 for the proposed tariff sheet and a waiver of Section 154.207 of the Commission's regulations.

Crossroads states further that copies of the filing were served on its current firm and interruptible customers and interested state commissions.

Any person desiring to be heard or to protest this filing should file a motion to intervene or protest with the Federal Energy Regulatory Commission, 888 First Street, N.E., Washington, D.C. 20426, in accordance with Sections 385.211 and 385.214 of the Commission's Rules and Regulations. All such motions or protests must be filed as provided in Section 154.210 of the Commission's Regulations. Protests will be considered by the Commission in determining the appropriate action to be taken in this proceeding, but will not serve to make protestants parties to the proceeding. Any person wishing to become a party must file a motion to intervene. Copies of Crossroads' filing are on file with the Commission and are available for public inspection in the Public Reference Room.

Lois D. Cashell,

Secretary.

[FR Doc. 97–24371 Filed 9–12–97; 8:45 am]

BILLING CODE 6717–01–M

DEPARTMENT OF ENERGY

Federal Energy Regulatory Commission

[Docket No. RP97–363–001]

Egan Hub Partners, L.P.; Notice of Compliance Filing

September 9, 1997.

Take notice that on September 4, 1997, Egan Hub Partners, L.P. (Egan Hub), filed tariff sheets to reflect compliance with Order No. 587 et seq. and an ''Order on Compliance Filing'' issued on June 30, 1997, 79 FERC ¶ 61,423 (1997), (hereinafter the ''June 30 Order''). In addition to filing tariff sheets that have been revised to comply with changes ordered by the Commission in the June 30 Order, Egan Hub states that it is also filing those tariff sheets that were approved by the Commission in the June 30 Order. In addition to the foregoing changes, Egan Hub states that it has also corrected spelling and similar errors.

Any person desiring to protest this filing should file a protest with the Federal Energy Regulatory Commission, 888 First Street, N.E., Washington, D.C., 20426, in accordance with Section 385.211 of the Commission's Rules and Regulations. All such protests must be filed as provided in Section 154.210 of the Commission's Regulations. Protests will be considered by the Commission in determining the appropriate action to be taken but will not serve to make the protestants parties to the proceeding. A copy of this filing is on file with the Commission and is available for public inspection in the public reference room.

Lois D. Cashell,

Secretary.

[FR Doc. 97–24366 Filed 9–12–97; 8:45 am]

BILLING CODE 6717–01–M

DEPARTMENT OF ENERGY

Federal Energy Regulatory Commission

[Docket No. RP97–514–000]

Huntsville Utilities Gas System City of Huntsville, Alabama v. Midcoast Interstate Gas Transmission, Inc.; Notice of Complaint and Motion for Expedited Relief

September 9, 1997.

Take notice that on September 4, 1997, Huntsville Utilities Gas System, City of Huntsville, Alabama, (Huntsville) tendered for filing a complaint against Midcoast Gas Transmission, Inc. (Midcoast) and a motion for expedited relief, pursuant to Section 5 of the Natural Gas Act, Order No. 636–A, and Rules 206 and 212 of the Commission's Rules of Practice and Procedure.

Huntsville submits its complaint against the alleged unlawful auction procedures of Midcoast and the improper bids by Midcoast's marketing affiliate, Midcoast Marketing, Inc. (MMI), with respect to certain firm transportation capacity Huntsville has on Midcoast that is subject to expiring service agreements for which Huntsville has a tariff right of first refusal (ROFR). Midcoast Gas Tariff, General Terms and Conditions, Section 3.14(e).

Among other things, Huntsville contends that the terms of the auction were inconsistent with the Commission's May 30, 1997, Order in docket No. RP97–331, which among other things stays abandonment authority relating to service to Huntsville until April 1, 1998. Huntsville also contends that MMI, which is the sole bidder on its expiring capacity, bid on the Huntsville capacity, without having market support for its bids, in an effort to manipulate the auction and force Huntsville to exercise

its ROFR for nearly the maximum rate, for the full amount of the expiring Huntsville capacity, for the maximum matching term, thereby discouraging Huntsville's pursuit of alternative transportation service on the Southern Natural Gas Company (Southern) North Alabama Project that was approved in Docket No. CP96–153.

Huntsville requests that the Commission: (i) Void the Midcoast auction and MMI bids; (ii) do so on an expedited basis, or order a stay of the September 18, 1997 date for the exercise of the Huntsville ROFR, pending further Commission action on the Huntsville complaint; (iii) investigate Midcoast and MMI's activities with respect to the expiring Huntsville capacity; and (iv) grant other relief as the Commission deems appropriate.

Any person desiring to be heard or to protest said complaint should file a motion to intervene or a protest with the Federal Energy Regulatory Commission, 888 First Street, N.E., Washington, D.C. 20426, in accordance with Sections 385.214 and 385.211 of the Commission's Rules of Practice and Procedure. All such motions or protests should be filed on or before September 15, 1997. Protests will be considered by the Commission in determining the appropriate action to be taken, but will not serve to make Protestants parties to the proceeding. Any person wishing to become a party must file a motion to intervene. Copies of this filing are on file with the Commission and are available for public inspection. Answers to this complaint shall be due on or before September 15, 1997.

Lois D. Cashell,

Secretary.

[FR Doc. 97–24364 Filed 9–12–97; 8:45 am]

BILLING CODE 6717–01–M

DEPARTMENT OF ENERGY

Federal Energy Regulatory Commission

[Docket No. TM98–1–65–000]

Jupiter Energy Corporation; Notice of Proposed Changes in FERC Gas Tariff

September 9, 1997.

Take notice that on September 4, 1997, Jupiter Energy Corporation (Jupiter) tendered for filing the following sheets of effective date of October 1, 1997:

Eleventh Revised Sheet No. 4A
Eleventh Revised Sheet No. 5A
Eleventh Revised Sheet No. 6A

Jupiter states that the filed tariff sheets reflect the implementation of Jupiter's Annual Charge Adjustment (ACA) surcharge. The proposed surcharge rate is 0.22¢ per Dth.

Jupiter states that a copy of the filing has been served on its jurisdictional customer.

Any person desiring to be heard or to protest said filing should file a motion to intervene or protest with the Federal Energy Regulatory Commission, 888 First Street, N.E., Washington, DC 20426, in accordance with Sections 385.211 and 385.214 of the Commission's Rules of Practice and Procedure. All such motions or protests must be filed in accordance with Section 154.210 of the Commission's Regulations. Protests will be considered by the Commission in determining the appropriate action to be taken, but will not serve to make protestants parties to the proceeding. Any person wishing to become a party must file a motion to intervene. Copies of Jupiter's filing are on file with the Commission and are available for public inspection.

Lois D. Cashell,

Secretary.

[FR Doc. 97–24370 Filed 9–12–97; 8:45 am]

BILLING CODE 6717–01–M

DEPARTMENT OF ENERGY

Federal Energy Regulatory Commission

[Docket No. CP97–718–000]

K N Interstate Gas Transmission Company; Notice of Request Under Blanket Authorization

September 9, 1997.

Take notice that on August 29, 1997, K N Interstate Gas Transmission Company (KNI), Post Office Box 281304, Lakewood, Colorado 80228, filed in docket No. CP97–718–000 a request pursuant to Sections 157.205 and 157.212 of the Commission's Regulations under the Natural Gas Act (18 CFR 157.205 and 157.212) for authorization to install and operate eighteen new delivery taps, under an existing transportation agreement with K N Energy, Inc. (KNE), a local distribution customer. KNI also request authorization to install and operate one new tap for Mid-America Pipeline Company (MAPC), an industrial transportation service customer, under an existing transportation agreement. KNI is requesting authorization to install the taps in various counties in Nebraska and in two counties in Kansas, to facilitate the delivery of natural gas for agricultural, commercial, domestic and industrial uses. KNI makes such request under its blanket certificate issued in Docket No. CP83–140–000 and CP83–140–001 pursuant to Section 7 of the Natural Gas Act, all as more fully set forth in the request on file with the Commission and open to public inspection.

Specifically, KNI proposed to install the following eighteen delivery points to KNE:

1. Two delivery points in Thayer County, Nebraska each to deliver approximately 29 Mcf of natural gas on a peak day and 950 Mcf annually to serve separate irrigation customers, at an estimated facility cost of $1,810 each.
2. A delivery point in Gosper County, Nebraska to deliver approximately 24 Mcf on a peak day and 792 Mcf annually to serve an irrigation customer, at an estimated facility cost of $1,550.
3. A delivery point in Clay County, Nebraska to deliver approximately 19 Mcf on a peak day and 634 Mcf annually to serve an irrigation customer, at an estimated facility cost of $1,550.
4. Two delivery points in Boone County, Nebraska to deliver gas to serve two separate irrigation customers, at an estimated facility cost of $1,810 each. Approximately 36 Mcf is proposed to be delivered through one of the points on a peak day and 1,188 Mcf annually, while approximately 26 Mcf is proposed to be delivered on a peak day and 871 Mcf annually at the other point.
5. Two delivery points in Buffalo County, Nebraska. One point to deliver approximately 6 Mcf on a peak day and 198 Mcf annually to serve an irrigation customer, at an estimate facility cost of $1,500. The other point would be to deliver approximately 53 Mcf on a peak day and 43,423 Mcf annually to serve a commercial customer, at an estimated facility cost of $2,000.
6. Two delivery points in Fillmore County, Nebraska to deliver gas to serve two separate irrigation customers, at an estimated facility cost of $1,810 each. Approximately 29 Mcf is proposed to be delivered through one of the points on a peak day and 950 Mcf annually, while approximately 26 Mcf is proposed to be delivered on a peak day and 871 Mcf annually at the other point.
7. A delivery point in Madison County, Nebraska to deliver approximately 24 Mcf on a peak day and 792 Mcf annually to serve an irrigation customer, at an estimated facility cost of $1,550.
8. A delivery point in Norton County, Kansas to deliver approximately 6 Mcf on a peak day and 360 Mcf annually, to serve a domestic customer, at an estimated facility cost of $1,500.
9. Two delivery points in Pierce County, Nebraska to deliver gas to serve two separate irrigation customers, at an

estimated facility cost of $1550 each. Approximately 18 Mcf is proposed to be delivered through one of the points on a peak day and 594 Mcf annually, while approximately 24 Mcf is proposed to be delivered on a peak day and 792 Mcf annually at the other point.

10. A delivery point in Webster County, Nebraska to deliver approximately 480 Mcf on a peak day and 2,600 Mcf annually to serve a commercial customer, at an estimated facility cost of $3,250. KNI indicates that this tap is slated to serve ADM/Growmark (ADM), who requires the gas to operate a commercial grain dryer. It is stated that ADM required service by September 1, 1997 to engage in its seasonal crop drying operation, avoid damage to newly harvested crops and prevent economic loss to ADM. Accordingly, KNI has expressed its intent to provide ADM with the required gas service on an emergency basis.

11. A delivery point in Knox County, Nebraska to deliver approximately 1 Mcf on a peak day and 1,440 Mcf annually to serve a commercial customer, at an estimated facility cost of $1,550.

12. Two delivery points in Holt County, Nebraska to deliver gas to serve two separate commercial customers, at an estimated facility cost of $2,000 and $2,150, respectively. Approximately 67 Mcf is proposed to be delivered through one of the points on a peak day and 24,530 Mcf annually, while approximately 120 Mcf is proposed to be delivered on a peak day and 650 Mcf annually at the other point.

In addition, KNI also proposed to install a delivery point to MAPC. KNI states that such gas will be used to provide compressor fuel.

A delivery point in Ottawa County, Kansas to deliver approximately 636 Mcf of natural gas on a peak day and 115,000 Mcf annually to serve an industrial customer, at an estimated facility cost of $30,000.

Any person or the Commission's staff may, within 45 days after issuance of the instant notice by the Commission, file pursuant to Rule 214 of the Commission's Procedural Rules (18 CFR 385.214) a motion to intervene or notice of intervention and pursuant to Section 157.205 of the Regulations under the Natural Gas Act (18 CFR 157.205) a protest to the request. If no protest is filed within the time allowed therefor, the proposed activity shall be deemed to be authorized effective the day after the time allowed for filing a protest. If a protest is filed and not withdrawn within 30 days after the time allowed for filing a protest, the instant request shall be treated as an application for authorization pursuant to Section 7 of the Natural Gas Act.

Lois D. Cashell,

Secretary.

[FR Doc. 97–24356 Filed 9–12–97; 8:45 am]

BILLING CODE 6717–01–M

DEPARTMENT OF ENERGY

Federal Energy Regulatory Commission

[Docket No. OA96–38–000]

Long Island Lighting Company; Notice of Filing

September 9, 1997.

Take notice that on June 25, 1997, Long Island Lighting Company tendered for filing its refund report in the above-referenced docket.

Any person desiring to be heard or protest said filing should file a motion to intervene or protest with the Federal Energy Regulatory Commission, 888 First Street, N.E., Washington, D.C. 20426, in accordance with Rules 211 and 214 of the Commission's Rules of Practice and Procedure (18 CFR 385.211 and 18 CFR 385.214). All such motions or protests must be filed on or before September 19, 1997. Protests will be considered by the Commission in determining the appropriate action to be taken, but will not serve to make protestants parties to the proceeding. Any person wishing to become a party must file a motion to intervene. Copies of this filing are on file with the Commission and are available for public inspection.

Lois D. Cashell,

Secretary.

[FR Doc. 97–24360 Filed 9–12–97; 8:45 am]

BILLING CODE 6717–01–M

DEPARTMENT OF ENERGY

Federal Energy Regulatory Commission

[Docket No. TM98–1–15–000]

Mid Louisiana Gas Company; Notice of Proposed Changes in FERC Gas Tariff

September 9, 1997.

Take notice that on September 4, 1997, Mid Louisiana Gas Company (Mid Louisiana) tendered for filing to become part of in its FERC Gas Tariff, Third Revised Volume No. 1, the following tariff sheets, with an effective date of October 1, 1997:

Eighth Revised Sheet No. 4
Eighth Revised Sheet No. 4A

Mid Louisiana states that the purpose of the filing of the Revised Tariff Sheets is to reflect a revision to the unit rates for the collection of the Annual Charges imposed by Section 382 of the Commission's Regulations.

Mid Louisiana states that this filing is being made in accordance with Section 22 of the General Terms and Conditions of Mid Louisiana's FERC Gas Tariff, Third Revised Volume No. 1.

Any person desiring to be heard or to protest said filing should file a motion to intervene or protest with the Federal Energy Regulatory Commission, 888 First Street, N.E., Washington, D.C. 20426, in accordance with Sections 385.214 and 385.211 of the Commission's Rules and Regulations. All such motions or protests must be filed in accordance with Section 154.210 of the Commission's Regulations. Protests will be considered by the Commission in determining the appropriate action to be taken, but will not serve to make protestants parties to the proceeding. Any person wishing to become a party must file a motion to intervene. Copies of this filing are on file with the Commission and are available for public inspection in the Public Reference Room.

Lois D. Cashell,

Secretary.

[FR Doc. 97–24367 Filed 9–12–97; 8:45 am]

BILLING CODE 6717–01–M

DEPARTMENT OF ENERGY

Federal Energy Regulatory Commission

[Docket Nos. OA97–237–000, ER97–1079–000 and EC97–35–000]

New England Power Pool; Notice of Filing

September 9, 1997.

Take notice that on July 31, 1997, New England Power Pool tendered for filing an amendment in the above-referenced dockets.Any person desiring to be heard or to protest said filing should file a motion to intervene or protest with the Federal Energy Regulatory Commission, 888 First Street, N.E., Washington, D.C. 20426, in accordance with Rules 211 and 214 of the Commission's Rules of Practice and Procedure (18 CFR 385.211 and 18 CFR 385.214). All such motions or protests must be filed on or before September 19, 1997. Protests will be considered by the Commission in determining the appropriate action to be taken, but will not serve to make protestants parties to the proceeding. Any person wishing to become a party must file a motion to

intervene. Copies of this filing are on file with the Commission and are available for public inspection.

Lois D. Cashell,

Secretary.

[FR Doc. 97–24362 Filed 9–12–97; 8:45 am]

BILLING CODE 6717–01–M

DEPARTMENT OF ENERGY

Federal Energy Regulatory Commission

[Docket No. ER97–2353–0001]

New York State Electric & Gas Corporation; Notice of Filing

September 9, 1997.

Take notice that on July 9, 1997, New York State Electric & Gas Corporation tendered for filing its compliance filing in the above-referenced docket.

Any person desiring to be heard or to protest said filing should file a motion to intervene or protest with the Federal Energy Regulatory Commission, 888 First Street, N.E., Washington, D.C. 20426, in accordance with Rules 211 and 214 of the Commission's Rules of Practice and Procedures (18 CFR 385.211 and 18 CFR 385.214). All such motions or protests should be filed on or before September 19, 1997. Protests will be considered by the Commission in determining the appropriate action to be taken, but will not serve to make protestants parties to the proceedings. Any person wishing to become a party must file a motion to intervene. Copies of this filing are on file with the Commission and are available for public inspection.

Lois D. Cashell,

Secretary.

[FR Doc. 97–24358 Filed 9–12–97; 8:45 am]

BILLING CODE 6717–01–M

DEPARTMENT OF ENERGY

Federal Energy Regulatory Commission

[Docket No. TM98–1–64–001]

Pacific Interstate Offshore Company; Notice of Change in Rate

September 9, 1997.

Take notice that on September 3, 1997, Pacific Interstate Offshore Company (PIOC) tendered for filing to be part of its FERC Gas Tariff, Second Revised Volume No. 1, the following tariff sheet, with an effective date of October 1, 1997:

Fourth Revised Sheet No. 6

PIOC states the purpose of this filing is to set forth the applicable Annual Charge Adjustment (ACA) surcharge of .22 cents per Dth, effective October 1, 1997.

PIOC states that copies of this filing has been served on PIOC's sole customer, the Southern California Gas Company and the Public Utilities Commission of the State of California and other interested parties.

Any persons desiring to protest said filing should file protest with the Federal Energy Regulatory Commission, 888 First Street, N.E. Washington, D.C. 20426, in accordance with Sections 385.211 and 385.214 of the Commission's Rules of Practice and Procedure. All such motions or protests must be filed in accordance with Section 154.210 of the Commission's Regulations. Protests will be considered by the Commission in determining the appropriate action to be taken, but will not serve to make protestants parties to the proceeding. Copies of this filing are on file with the Commission and are available for public inspection.

Lois D. Cashell,

Secretary.

[FR Doc. 97–24369 Filed 9–12–97; 8:45 am]

BILLING CODE 6717–01–M

DEPARTMENT OF ENERGY

Federal Energy Regulatory Commission

[Docket No. RP97–291–004]

Panhandle Eastern Pipe Line Company; Notice of Compliance Filing

September 9, 1997.

Take notice that on September 4, 1997, Panhandle Eastern Pipe Line Company (Panhandle) tendered for filing as part of its FERC Gas Tariff, First Revised Volume No. 1, the tariff sheets listed on Appendix A attached to the filing, proposed to be effective September 14, 1997.

Panhandle asserts that the purpose of this filing is to comply with the Commission's order issued August 5, 1997 in Docket No. RP97–291–001, et al., 80 FERC ¶ 61,198 (1997).

Panhandle states that copies of this filing are being served on all affected customers, applicable state regulatory agencies and all parties to this proceeding.

Any person desiring to protest this filing should file a protest with the Federal Energy Regulatory Commission, 888 First Street, N.E., Washington, D.C. 20426, in accordance with Section 385.211 of the Commission's Rules and Regulations. All such protests must be filed in accordance with Section 154.210 of the Commission's Regulations. Protests will be considered by the Commission in determining the appropriate action to be taken, but will not serve to make protestants parties to the proceeding. Copies of this filing are on file with the Commission and are available for public inspection in the Public Reference Room.

Lois D. Cashell,

Secretary.

[FR Doc. 97–24365 Filed 9–12–97; 8:45 am]

BILLING CODE 6717–01–M

DEPARTMENT OF ENERGY

Federal Energy Regulatory Commission

[Docket Nos. TX94–4–000 and TX94–4–002]

Tex-La Electric Cooperative of Texas, Inc.; Notice of Filing

September 9, 1997.

Take notice that on August 29, 1997, Texas Utilities Electric Company and Southwestern Electric Company (collectively TU) tendered for filing a request for modification of the Final Order due to changed circumstances and an amendment to TU's compliance filing of May 1, 1995. For the modification and its amendment, TU requests an effective date of August 1, 1997. TU Electric seeks waiver of the Commission's notice requirements.

Copies of the filing were served on all parties on the official service list in Docket Nos. TX94–4–000 and TX94–4–002.

Any person desiring to be heard or to protest said filing should file a motion to intervene or protest with the Federal Energy Regulatory Commission, 888 First Street, N.E., Washington, D.C. 20426, in accordance with Rules 211 and 214 of the Commission's Rules of Practice and Procedure (18 CFR 385.211 and 18 CFR 385.214). All such motions or protests must be filed on or before September 19, 1997. Protests will be considered by the Commission in determining the appropriate action to be taken, but will not serve to make protestants parties to the proceeding. Any person wishing to become a party must file a motion to intervene. Copies of this filing are on file with the Commission and are available for public inspection.

Lois D. Cashell,

Secretary.

[FR Doc. 97–24363 Filed 9–12–97; 8:45 am]

BILLING CODE 6717–01–M

DEPARTMENT OF ENERGY

Federal Energy Regulatory Commission

[Docket No. TM97–13–29–000]

Transcontinental Gas Pipe Line Corporation; Notice of Proposed Changes in FERC Gas Tariff

September 9, 1997.

Take notice that on September 3, 1997 Transcontinental Gas Pipe Line Corporation (Transco) tendered for filing to become part its FERC Gas Tariff, Third Revised Volume No. 1, Sixth Revised Sheet No. 50, to be effective July 1, 1997.

Transco states that the purpose of the instant filing is to track rate changes attributable to transportation service purchased from Texas Gas Transmission Corporation (Texas Gas) under its Rate Schedule FT the costs of which are included in the rates and charges payable under Transco's Rate Schedule FT–NT. Transco states that the filing is being made pursuant to tracking provisions under Section 4 of Transco's Rate Schedule FT–NT.

Transco states that included in Appendix B attached to the filing is the explanation of the rate changes and details regarding the computation of the revised Rate Schedule FT–NT rates.

Transco states that copies of the filing are being mailed to each of its FT–NT customers and interested State Commissions.

Any person desiring to be heard or to protest said filing should file a motion to intervene or protest with the Federal Energy Regulatory Commission, 888 First Street, Washington, D.C. 20426, in accordance with Sections 385.214 and 385.211 of the Commission's Rules and Regulations. All such motions or protests must be filed as provided in Section 154.210 of the Commission's Regulations. Protests will be considered by the Commission in determining the appropriate action to be taken, but will not serve to make protestants parties to the proceeding. Any person wishing to become a party must file a motion to intervene. Copies of this filing are on file with the Commission and are available for public inspection in the Public Reference Room.

Lois D. Cashell,

Secretary.

[FR Doc. 97–24372 Filed 9–12–97; 8:45 am]

BILLING CODE 6717–01–M

DEPARTMENT OF ENERGY

Federal Energy Regulatory Commission

[Docket No. ER97–3954–000]

Unicom Power Marketing, Inc.; Notice of Filing

September 9, 1997.

Take notice that on August 28, 1997, Unicom Power Marketing, Inc., tendered for filing an amendment in the above-referenced docket.

Any person desiring to be heard or to protest said filing should file a motion to intervene or protest with the Federal Energy Regulatory Commission, 888 First Street, N.E., Washington, D.C. 20426, in accordance with Rules 211 and 214 of the Commission's Rules of Practice and Procedure (18 CFR 385.211 and 18 CFR 385.214). All such motions or protests must be filed on or before September 19, 1997. Protests will be considered by the Commission in determining the appropriate action to be taken, but will not serve to make protestants parties to the proceeding. Any person wishing to become a party must file a motion to intervene. Copies of this filing are on file with the Commission and are available for public inspection.

Lois D. Cashell,

Secretary.

[FR Doc. 97–24359 Filed 9–12–97; 8:45 am]

BILLING CODE 6717–01–M

DEPARTMENT OF ENERGY

Federal Energy Regulatory Commission

[Docket No. CP94–753–003]

United Cities Gas Company; Notice of Application To Amend

September 9, 1997.

Take notice that on September 4, 1997, Atmos Energy Corporation (Atmos), c/o Crowell & Moring LLP, 1001 Pennsylvania Avenue, NW, Washington, DC 20004–2595 filed an application pursuant to Section 7(c) of the Natural Gas Act and Part 157 of the Commission's Regulations to amend the limited jurisdiction certificate of public convenience and necessity issued in Docket No. CP94–753–000, *et al.* to United Cities Gas Company (United Cities), by substituting Atmos as the holder of the limited jurisdiction certificate. Atmos's application is on file with the Commission and open to public inspection.

Atmos states that on July 31, 1997, a merger between United Cities and Atmos became effective; and, the merged company bears the name Atmos. The limited jurisdiction certificate was issued in the above-captioned docket [1] authorizing United Cities to operate the Barnsley Storage Field (Barnsley) in Hopkins County, Kentucky, since it intended to lease capacity to a single storage customer, Sonat Marketing Company (Sonat), whose gas would flow in interstate commerce. United Cities' certificate was amended to replace Sonat with Woodward Marketing, LLC as the recipient of the storage service.[2] The certificate was further amended, to add to the certificated storage facilities four storage fields in Kansas.[3]

Any person desiring to be heard or to make any protest with reference to said application should on or before September 30, 1997, file with the Federal Energy Regulatory Commission, Washington, D.C. 20426, a motion to intervene or a protest in accordance with the requirements of the Commission's Rules of Practice and Procedure (18 CFR §§ 385.211 and 385.214) and the regulations under the Natural Gas Act (18 CFR 157.10). All protests filed with the Commission will be considered by it in determining the appropriate action to be taken but will not serve to make the protestants parties to the proceeding. Any person wishing to become a party in any proceeding herein must file a motion to intervene in accordance with the Commission's rules.

Take further notice that, pursuant to the authority contained in and subject to the jurisdiction conferred upon the Commission by Sections 7 and 15 of the Natural Gas Act and the Commission's Rules of Practice and Procedure, a hearing will be held without further notice before the Commission or its designee on this application if no motion to intervene is filed within the time required herein, if the Commission on its own review of the matter finds that permission and approval for the proposed abandonment are required by the public convenience and necessity. If a motion for leave to intervene is timely filed, or if the Commission on its own motion believes that formal hearing is required, further notice of such hearing will be duly given.

Under the procedure herein provided for, unless otherwise advised, it will be

[1] *See,* 68 FERC ¶ 61,334 (1994).
[2] *See,* 71 FERC ¶ 62,220 (1995).
[3] *See,* 75 FERC ¶ 62,044 (1996).

unnecessary for Atmos to appear or to be represented at the hearing.

Lois D. Cashell,

Secretary.

[FR Doc. 97–24357 Filed 9–12–97; 8:45 am]

BILLING CODE 6717–01–M

DEPARTMENT OF ENERGY

Federal Energy Regulatory Commission

[Docket No. TM98–1–43–000]

Williams Natural Gas Company; Notice of Proposed Changes in FERC Gas Tariff

September 9, 1997.

Take notice that on September 3, 1997, Williams Natural Gas Company (WNG) tendered for filing to become part of its FERC Gas Tariff, Second Revised Volume No. 1, Twenty Second Revised Sheet No. 6A. The proposed effective date of this tariff sheet is October 1, 1997.

WNG states that pursuant to Article 26 of the General Terms and Conditions of its FERC Gas Tariff, and FERC Annual Charges Billing under 18 CFR Part 382, dated August 1, 1997, WNG is filing to reflect an increase in the FERC Annual Charge Adjustment from $.0020 to $.0022 per Dth for the fiscal year beginning October 1, 1997. The unit charge factor of $.0020 per Dth, approved by the Commission, is adjusted by the debit amount related to the previous fiscal year to arrive at a total ACA unit charge factor of $.0022.

WNG states that a copy of its filing was served on all jurisdictional customers and interested state commissions.

Any person desiring to be heard or to protest this filing should file a motion to intervene or a protest with the Federal Energy Regulatory Commission, 888 First Street, N.E., Washington, D.C. 20426, in accordance with Sections 385.214 and 385.211 of the Commission's Rules and Regulations. All such motions or protests must be filed as provided in Section 154.210 of the Commission's Regulations. Protests will be considered by the Commission in determining the appropriate action to be taken, but will not serve to make protestants parties to the proceedings. Any person wishing to become a party must file a motion to intervene. Copies of this filing are on file with the Commission and are available for public inspection in the Public Reference Room.

Lois D. Cashell,

Secretary.

[FR Doc. 97–24368 Filed 9–12–97; 8:45 am]

BILLING CODE 6717–01–M

DEPARTMENT OF ENERGY

Western Area Power Administration

Transmission and Ancillary Services Rates, Pick-Sloan Missouri Basin, Eastern Division

AGENCY: Western Area Power Administration, DOE.

ACTION: Notice of proposed rate adjustments.

SUMMARY: The Western Area Power Administration (Western) is proposing transmission service and ancillary service rate adjustments for Pick-Sloan Missouri Basin Program, Eastern Division (P–SMBP–ED). The proposed formula rates will provide sufficient revenue to repay all annual costs and assigned investment within the allowable time periods. The proposed formula rates are scheduled to go into effect May 1, 1998. This **Federal Register** notice continues the procedure for public participation in the transmission and ancillary service rate adjustments, which began with Western's Advance Announcement dated March 28, 1997.

DATES: The consultation and comment period for the proposed transmission service and ancillary service rates will end November 14, 1997. Written comments should be received by Western by the end of the comment period to be assured consideration. Western will present a detailed explanation of the proposed rate at the public information forums which will be held at the following dates and times:

1. October 16, 1997—9 a.m. MDT, Billings, Montana.

2. October 17, 1997—9 a.m. CDT, Sioux Falls, South Dakota.

Western will receive written and oral comments at the public comment forums which will be held at the following times:

3. November 13, 1997—9 a.m. MST, Billings, Montana.

4. November 14, 1997—9 a.m. CST, Sioux Falls, South Dakota.

ADDRESSES: Western's public information forums will be held at the following places:

1. Radisson Northern Hotel, Broadway & 1st Avenue North, Billings, Montana.

2. Howard Johnson, 3300 West Russell Street, Sioux Falls, South Dakota.

Western's public comment forums will be held at the following places:

3. Radisson Northern Hotel, Broadway & 1st Avenue North, Billings, Montana.

4. Howard Johnson, 3300 West Russell Street, Sioux Falls, South Dakota.

Written comments should be sent to: Gerald C. Wegner, Regional Manager, Upper Great Plains Region, Western Area Power Administration, P.O. Box 35800, Billings, MT 59107–5800.

FOR FURTHER INFORMATION CONTACT: Robert F. Riehl, Rates Manager, Upper Great Plains Region (UGPR), Western Area Power Administration, P.O. Box 35800, Billings, MT 59107–5800, (406) 247–7388. E-mail riehl@wapa.gov or visit UGPR's home page at http://www.wapa.gov/ugp/.

SUPPLEMENTARY INFORMATION:

Table of Contents

I. Introduction/Background
II. Western's Proposal
III. Proposed Rates
IV. Cost Shifting
V. Other Options
VI. Authorities

I. Introduction/Background

Western initiated a public process to establish long-term open access transmission and ancillary service rates for the P–SMBP–ED with its advance announcement of March 28, 1997. Several options were identified and comments and ideas were solicited on these options. Forty-five letters were received as a result of the solicitation. The letters commented on fourteen issues. The most constant and consistent message received from the comments was that Western should choose a proposal that would have the least impact upon the P–SMBP–ED firm power rate. This **Federal Register** notice continues that process.

II. Western's Proposal

1. Honor Existing Contract Arrangements

Western presently has the following transmission and related services contract agreements. Western intends to abide by the terms of these agreements and sustain the benefits incurred from these agreements.

Basin Electric Power Cooperative (Basin Electric) has a bilateral Contract, 90–BAO–415, with Western for Joint Transmission System services. The Contract became effective on the first day of the first full billing period following the date of its execution, January 5, 1995, and remains in effect

through the hour ending 2400 of December 31, 2039. Basin Electric also has a Contract, 90–BAO–431, with Western for transmission service on the Montana Power Company (MPC) system. The Contract became effective on the date of its execution, November 6, 1990, and remains in effect through the hour 2400 on December 31, 2033.

Black Hills Corporation has a bilateral Contract, 88–BAO–320, with Western for transmission service. The Contract became effective October 1, 1988, and terminates at 12:01 a.m., October 1, 1998, as specified by the Contract.

Heartland Consumers Power District (Heartland) has a bilateral Contract, 89–BAO–344, with Western for Joint Transmission System services. The Contract became effective on the first billing day of the first full billing period following the date of its execution, December 28, 1995, and remains in effect through the hour ending 2400 on December 31, 2039.

Minnkota Power Cooperative, Inc. has a bilateral Contract, 88–BAO–313, with Western for transmission service. The Contract became effective the first day of the first billing period after the date of execution, October 6, 1989, and remains in effect through December 31, 2020, as specified in the Contract.

Missouri Basin Municipal Power Agency has a bilateral Contract, 8–07–60–P0002, with Western for use of the Joint Transmission System. The Contract became effective on the first day of the November 1977 billing period and remains in effect until midnight of December 31, 1997, as defined in the Contract.

Montana-Dakota Utilities Company has a bilateral Contract, 88–BAO–308, with Western for transmission service. The Contract became effective on its date of execution, July 1, 1988, and remains in effect until December 31, 2015.

MPC has a bilateral Contract, 4–07–60–P0228, with Western for transmission service. The Contract became effective October 15, 1984. Notice to terminate this Contract has been served and the Contract will terminate on or about June 30, 1998.

Northwestern Public Service Company has a bilateral Contract, 4–07–60–P0223, with Western for transmission service. The Contract became effective on April 1, 1984, and remains in effect until December 31, 2000.

Northern States Power Company has a Contract, 6–07–60–P0236, with Western for transmission service. The Contract became effective on the date of its execution, June 2, 1986. Notice to terminate this Contract has been served and the Contract will terminate on January 31, 2001.

2. The Integrated System Will Be Used for Transmission Service in All New Electric Service Arrangements

Western, Basin Electric, and Heartland have combined their transmission facilities to form an Integrated System (IS) and herein developed transmission and ancillary service rates using a Federal Energy Regulatory Commission (FERC) approved rate design. Western has been designated as the operator of the IS by the other participants. The IS consists of the transmission facilities owned by Basin Electric, and Heartland east of the east-west electrical separation in the United States, the transmission facilities owned by Western in the P–SMBP–ED, and the Miles City DC Tie owned by Western and Basin Electric. These facilities interconnect with utilities in the States of Montana, North Dakota, South Dakota, Nebraska, Iowa, Colorado, Minnesota, and Missouri and in addition include facilities which interconnect with Canada.

Our approach for formation of the IS was to include facilities which followed the spirit and intent of the order and to make the system most useful to the transmission requesters. For these reasons we included several major facilities which were not a part of the Joint Transmission System. We included the second 345-kV transmission line between the Antelope Valley and Leland Olds generating stations; which follows the definitions used for acceptable transmission facilities in other filings. The 230-kV transmission line between Tioga, North Dakota, and Boundary Dam, which provides access to loads in Canada, has been included in the IS. The Miles City DC Tie, which provides for the transmission of electricity between the east-west electrical separation of the United States and increases access to transmission on the IS. The IS also differs from the Joint Transmission System in that it does not include the transmission facilities owned by the joint owners of the Laramie River Generating Station, which require the agreement of all participants prior to inclusion. Basin Electric, and Heartland do not constitute all the owners in the Laramie River Generating Station. If they reach agreement, Western, Basin Electric, and Heartland may consider inclusion of those facilities in the IS rate and tariff.

For each of their new electric service arrangements crossing the IS facilities, Western, Basin Electric, and Heartland will take service under the proposed IS rates. To avoid double charging for transmission services, credit will be given for transmission capacity reservations in existing Joint Transmission System service contracts for new transactions from existing resources. Western, as operator of the IS, will bill for service, collect payments, and distribute revenue to each participant.

III. Proposed Rates

The proposed rates conform to the spirit and intent of FERC Order Nos. 888 and 888–A. An Open Access Transmission Tariff (Tariff), specifying terms and conditions, is being developed under a separate process. Once implemented, Western, Basin Electric, Heartland, and others will take service under the proposed Tariff and rates for all new transmission and/or electric sales arrangements. Western is requesting public comment on a proposed rate formula that would be adjusted annually, on or about May 1 of each year, by inserting the previous year's data into the formula. The data herein is fiscal year 1996 data. These rates will support Western's Tariff and conform with the spirit and intent of FERC Order Nos. 888 and 888–A. Supporting information and impacts of these rates are detailed in a rate brochure available to all interested parties.

1. Proposed Revenue Requirement for IS Transmission Service

The proposed rate for IS transmission service (Network and Point to Point) is based on a revenue requirement that recovers: (i) The IS investment and interest cost for Western, Basin Electric, and Heartland facilities associated with providing IS transmission service; and (ii) the operation, maintenance, administrative and general cost for Western, Basin Electric and Heartland allocated to IS transmission service. This revenue requirement is offset by appropriate transmission revenues. Rates will be recalculated every year on or about May 1 based on the previous year's data. The previous year's data to be used in the recalculation will be made available for review 30 days before the new rates are implemented. Firm and Non-Firm Point to Point transmission service rates will be offered on an up-to basis to promote maximum usage and transmission revenues from the IS.

2. Proposed Rate for Network IS Transmission Service

The proposed rate for monthly Network IS transmission service is the product of the network customer's load

ratio share times one-twelfth (1/12) of the annual network transmission revenue requirement. The network transmission revenue requirement is derived by annualizing the IS transmission investment, and adding transmission related annual costs, including operation, maintenance, interest, administrative and general costs. The annual costs are reduced by revenue credit for the Non-Firm transmission service. The load ratio share is based on the network customer's hourly load coincident with the IS monthly transmission system peak minus the coincident peak for all IS Firm Point-to-Point transmission service plus the point-to-point reservations. The Network rate includes the cost for scheduling, system control, and dispatch service needed to provide transmission service.

3. Proposed Rate for Firm Point-to-Point IS Transmission Service

The proposed Firm Point-to-Point IS rate is based on a revenue requirement derived by annualizing the IS transmission investment, and adding transmission related annual costs. These transmission related annual costs include operation, maintenance, interest, administrative and general costs. The annual costs are reduced by revenue credits for Non-Firm transmission. The resultant net annual cost to be recovered is divided by the capacity reservation needed for the annual average monthly IS transmission load. Using 1996 data, this methodology produced a charge of $3.07/kW-month for Firm Point-to-Point transmission service. This proposed rate may be adjusted each year on or about May 1, by a recalculation based on the previous years data using the formula: (Total Annual Revenue Requirement—Non Firm Revenue Credits)/Annual Average Transmission System Monthly Peak Load/12 months. The point-to-point rate includes the cost for scheduling, system control, and dispatch service needed to provide transmission service.

4. Proposed Rate for Non-Firm Point-to-Point Service

The proposed rate for Non-Firm Point-to-Point IS transmission service is an energy rate up-to but never higher than the Firm Point-to-Point rate. This rate will remain in effect concurrently with the Firm Point-to-Point rate. The Non-Firm Point-to-Point rate includes the cost for scheduling, system control, and dispatch service needed to provide transmission service.

5. Proposed Rates for Ancillary Services

Western will provide ancillary services, subject to availability, as described below and as listed in Table 1. The rates are designed to recover only the costs incurred for providing the service(s).

6. Proposed Rate for Scheduling, System Control and Dispatch Service

Western's annualized costs for scheduling, system control and dispatch service is determined by multiplying the portion of the Watertown Operations Office net plant and communications facilities net plant associated with scheduling, system control and dispatch service by the transmission fixed charge rate. The annual cost for scheduling, system control and dispatch service is then divided by the number of daily schedules in FY 1996. Using 1996 data, this methodology for determining the scheduling, system control and dispatch service rate has produced a charge of $54.50/schedule/day. This rate and rate design is recovering only Western's revenue requirement.

7. Proposed Rate for Reactive Supply and Voltage Control Service

Western's annualized cost for reactive supply and voltage control is determined by multiplying the total P–SMBP–ED generation net plant by the generation fixed charge rate. The annualized cost is multiplied by the capability used for reactive support to determine Western's reactive service revenue requirement. Basin Electric's and Heartland's annual revenue requirements are based upon the annualized cost of equipment installed on their generators to provide this service. Western's, Basin Electric's, and Heartland's revenue requirements are summed for the total revenue requirement. The reactive supply and voltage control service charge is then derived by dividing the revenue requirement by the total load in Western's control area. The annual cost is then divided by 12 months to obtain a monthly charge. Using 1996 data, this methodology for determining the rate for reactive supply and voltage control has produced a charge of $0.08/kW-month for transmission capacity reserved.

8. Proposed Rate for Regulation and Frequency Response Service

Regulation and frequency response service in the east side of the control area is provided primarily by Oahe generation and in the west side of the control area by Fort Peck, both of which are Corps of Engineers (Corps) facilities. The Corps generation fixed charge rate is applied to Oahe and Fort Peck net plant costs producing an annual generation revenue requirement for the Oahe and Fort Peck power plants. This revenue requirement is divided by the capacity at the plants to derive a dollar per kilowatt charge for Oahe's and Fort Peck's installed capacity. This dollar per kilowatt charge is then applied to capacity used at Oahe and Fort Peck for regulation and frequency response service in the control area. The capacity used for regulation and frequency response service has been determined to be 4 percent of the annual peak load. The 4 percent value was derived by averaging the incremental change in hourly load in the control area for the calendar year. The annual revenue requirement for regulation and frequency response service is determined by applying the dollar per kilowatt charge to the capacity used for regulation and frequency response. The regulation and frequency response service charge is then determined by dividing the revenue requirement by Western's load in the control area. The annual cost is then divided by 12 months to obtain a monthly charge. Using 1996 data, this methodology for determining the rate for regulation and frequency response produced a charge of $0.09/kW-month of load for which Western is providing this service. This rate and rate design is recovering Western's revenue requirement only. Credit will be given to those transmission customers who provide Western with Automatic Generation Control (AGC) of generation facilities capable of providing this service.

9. Proposed Rate for Energy Imbalance Service

This service is not intended to provide backup for generation supply. Energy shall be returned with like energy (on peak with on peak, etc.) and accounts zeroed out monthly. Western reserves the right to apply a penalty to energy imbalances outside a 3 percent bandwidth (+/-1.5 percent deviation). The penalty for under deliveries outside the 3 percent bandwidth is 100 mills/kWh. Over deliveries outside the 3 percent bandwidth will be forfeited to the control area

10. Proposed Rate for Reserves

Western's annualized cost for reserves is determined by multiplying the P–SMBP–ED generation net plant costs by the generation fixed charge rate. The cost/kW-year is determined by dividing the plant costs by the plant capacity. The capacity used for reserves is determined by multiplying the peak IS load in the control area by the MAPP

operating reserve requirement. The cost/kW-year is multiplied by the capacity used for reserves to determine the annual cost of reserves. The annual cost of reserves is divided by Western's peak load in the control area to calculate the annual charge. The annual cost is then divided by 12 months to obtain a monthly charge. Using 1996 data, this methodology for determining the reserve rate has produced a charge of $0.12/kW-month of customer load. This rate and rate design is recovering only Western's revenue requirement. If energy is taken under this service the energy charge will be the MAPP Rate for Emergency Energy, which is currently 30 mills/kWh.

TABLE 1.—PROPOSED SERVICE RATE FORMULAS FOR NEW TRANSACTIONS

Service	Rate formula	1996 data	Rate based on 1996 data
Network Transmission	Customer's Load Ratio Share * 1/12 * (Annual Transmission Revenue Requirement—Non-Firm Revenue Credits).	Customer's Load Ratio Share * 1/12 * ($116.4M—$12.6M).	For comparison estimate at $3.07/kW-Mo.
Firm Point-to-Point Transmission	(Total Annual Revenue Requirement—Non-Firm Revenue Credits)/Annual Average Transmission System Monthly Peak Load/12 months.	($116.4M—$12.6M)/2,819 MW/12 months.	$3.07/kW-Mo.
Non-Firm Point-to-Point Transmission.	Firm Point-to-Point rate/730 hours per month.	$3.07/kW—Mo/730 hours/month	4.20 Mills/kWh.
Scheduling, System Control, and Dispatch.	Transmission fixed charge rate* ((.4137 * Watertown net plant) + (.384 * communications net plant))/number of daily schedules per year.	20.59% * $6.86M/25,915 daily schedules per year.	$54.50/schedule/day.
Reactive Supply and Voltage Control.	((Generation fixed charge rate * generation net plant cost * capability used for reactive support) + Basin Electric and Heartland revenue requirement)/load in control area/12 months.	((12.3%* $613.2M * 2.02%) + $1M)/2,532 MW-yr/12 months.	$0.08/kW-Mo.
Regulation and Frequency Response.	COE fixed charge rate * COE generation net plant cost/plant capacity * capacity used for regulation/Western's load in control area/12 months.	10.4% * $251.6M/937 MW * 64.6 MW/1,615 MW/12 months.	$0.09/kW-Mo.
Energy Imbalance	Penalty	100 mills/kWh charge for under deliveries outside 3% bandwidth(+/−1.5%). Over deliveries outside 3% bandwidth forfeited to the control area.	
Reserves	Generation fixed charge rate * generation net plant cost/plant capacity * capacity used for reserves/Western's load in control area/12 months.	12.3% * $613.2M/2,517 MW * 80.75 MW/1,615 MW/12 months.	$0.12/kW-Mo.

IV. Cost Shifting

There is no immediate impact to the P–SMBP–ED firm power rate. In the first few years as new electric service arrangements move to the IS, costs will shift between the IS participants. Western will incur approximately $1 million/year of additional transmission cost, Heartland will incur approximately $200,000/year of additional transmission cost and Basin Electric's costs will be reduced approximately $2.4 million/year, based upon average Pick-Sloan generation. Western's increased transmission costs will have minimal impact to the P–SMBP–ED firm power rate. Although it is difficult to project cost shifting among the IS participants beyond the first few years following the implementation of this proposal, additional usage, and increased revenues should occur as existing transmission contracts terminate and are reformulated. This should mitigate the impact to the participants. Transition payments among the IS participants may be considered to mitigate impacts or cost shifts if in this public process the impacts are determined to be too severe.

V. Other Options

All other options mentioned in the Advance Announcement are evaluated in the customer rate brochure. The additional comment item of generation based rates is also examined in the customer rate brochure.

VI. Authorities

Transmission and ancillary services rates for the P–SMBP–ED are being established pursuant to the Department of Energy Organization Act (42 U.S.C. 7101 *et. seq.*) and the Reclamation Act of 1902 (43 U.S.C. 371 *et. seq.*), as amended and supplemented by subsequent enactments, particularly section 9(c) of the Reclamation Project Act of 1939 (43 U.S.C. 485h(c)) and section 5 of the Flood Control Act of 1944 (16 U.S.C. 825s) and other acts specifically applicable to the projects involved.

By Amendment No. 3 to Delegation Order No. 0204–108, published November 10, 1993 (58 FR 59716), the Secretary of DOE delegated (1) the authority to develop long-term power and transmission rates on a nonexclusive basis to the Administrator of Western; (2) the authority to confirm, approve, and place such rates into effect

on an interim basis to the Deputy Secretary; and (3) the authority to confirm, approve, and place into effect on a final basis, to remand, or to disapprove such rates to the FERC. Existing DOE procedures for public participation in power rate adjustments are found at 10 CFR part 903.

Regulatory Flexibility Analysis

Pursuant to the Regulatory Flexibility Act of 1980 (5 U.S.C. 601, *et. seq.*), each agency, when required to publish a proposed rule, is further required to prepare and make available for public comment an initial regulatory flexibility analysis to describe the impact of the proposed rule on small entities. In this instance the initiation of the IS transmission rate and ancillary service rate adjustments are related to non-regulatory services provided by Western at particular rates. Under 5 U.S. C. 601(2), rules of particular applicability relating to rates or services are not considered rules within the meaning of the act. Since the IS transmission rates and ancillary services are of limited applicability, no flexibility analysis is required.

Environmental Compliance

Western will conduct an environmental evaluation of the proposed rates and develop the appropriate level of environmental documentation pursuant to the National Environmental Policy Act (NEPA) of 1969 (42 U.S.C. 4321 *et. seq.*); the Council on Environmental Quality Regulations for implementing NEPA (40 CFR parts 1500 through 1508); and the DOE NEPA Implementing Procedures and Guidelines (10 CFR part 1021).

Review Under the Paperwork Reduction Act

In accordance with the Paperwork Reduction Act of 1980, (44 U.S.C. 3501 *et. seq.*), Western has received approval from the Office of Management and Budget for the collection of customer information in this rule, under control number 1910–0100.

Determination Under Executive Order 12866

DOE has determined that this is not a significant regulatory action because it does not meet the criteria of Executive Order 12866, 58 FR 51735. Western has an exemption from centralized regulatory review under Executive Order 12866; accordingly, no clearance of this notice by Office of Management and Budget is required.

Availability of Information

All brochures, studies, comments, letters, memoranda, or other documents made or kept by Western for developing the proposed rates, will be made available for inspection and copying at the Upper Great Plains Regional Office, located at 2900 4th Avenue North, Billings, MT 59107–5800, during normal business hours.

Dated: September 5, 1997.

Michael S. Hacskaylo,

Acting Administrator.

[FR Doc. 97–24346 Filed 9–12–97; 8:45 am]

BILLING CODE 6450–01–P

ENVIRONMENTAL PROTECTION AGENCY

[OPPTS–400116; FRL–5745–7]

Toxics Data Reporting Committee of the National Advisory Council for Environmental Policy and Technology; Notice of Public Meeting

AGENCY: Environmental Protection Agency (EPA).

ACTION: Notice of public meeting.

SUMMARY: Under the Federal Advisory Committee Act, EPA gives notice of a 2–day meeting of the Toxics Data Reporting Committee of the National Advisory Council for Environmental Policy and Technology. This will be the first meeting of the Toxics Data Reporting (TDR) Committee, whose mission is to provide advice to EPA regarding the Agency's Toxics Release Inventory (TRI) Program.

DATES: The public meeting will take place on September 29-30, 1997, from 8:30 a.m. to 5 p.m. Written and electronic comments in response to this **Federal Register** should be received by September 18, 1997.

ADDRESSES: For the meeting location contact Cassandra Vail after September 18, 1997, at (202) 260–0675. Written comments should be submitted in triplicate to: OPPT Docket Clerk, TSCA Document Receipt Office (7407), Office of Pollution Prevention and Toxics, Environmental Protection Agency, Rm. E–G099, 401 M St., SW., Washington, DC 20460.

Comments and data may also be submitted electronically by following the instructions under Unit II. of this document. No Confidential Business Information (CBI) should be submitted through e-mail.

FOR FURTHER INFORMATION CONTACT: Cassandra Vail, telephone: (202) 260–0675, fax number: (202) 401–8142, e-mail: vail.cassandra@epamail.epa.gov. or Michelle Price, telephone: (202) 260–3372, fax number: (202) 410–8142, e-mail: price.michelle@epamail.epa.gov.

SUPPLEMENTARY INFORMATION:

I. Background

EPA is proposing that the TDR committee discuss the following subjects regarding the TRI reporting forms, Forms R and Form A: (1) Formatting of the Form R; (2) nomenclature used in the Form R; (3) opportunities for burden reduction in both Form R and Form A; and (4) additional clarification of the elements in the Form R and EPA's presentation of the data in public information documents. EPA also expects to receive specific recommendations from the TDR committee for changes, modifications, deletions, and/or additions of data elements to the Form R and Form A. The purpose of the first meeting will be to discuss section 5 of the Form R with regard to the definition of release.

Oral presentations or statements by interested parties will be limited to 5 minutes. Interested parties are encouraged to contact Cassandra Vail, to schedule presentations before the committee.

II. Public Record

A record has been established for this action under docket control number ''OPPTS–400116'' (including comments and data submitted electronically as described below). A public version of this record, including printed, paper versions of electronic comments, which does not include any information claimed as CBI, is available for inspection from noon to 4 p.m., Monday through Friday, excluding legal holidays. The public record is located in the TSCA Nonconfidential Information Center, Rm. NE-B607, 401 M St., SW., Washington, DC 20460.

Electronic comments can be sent directly to EPA at:
oppt.ncic@epamail.epa.gov

Electronic comments must be submitted as an ASCII file avoiding the use of special characters and any form of encryption.

The official record for this action, as well as the public version, as described above will be kept in paper form. Accordingly, EPA will transfer all comments received electronically into printed, paper form as they are received and will place the paper copies in the official record which will also include all comments submitted directly in writing. The official record is the paper record maintained at the address in ADDRESSES at the beginning of this document.

List of Subjects

Environmental protection.

Dated: September 9, 1997

Cassandra Vail,

Acting, Designated Federal Official, Office of Pollution Prevention and Toxics.

[FR Doc. 97–24418 Filed 9-12-97; 8:45 am]

BILLING CODE 6560–50–F

ENVIRONMENTAL PROTECTION AGENCY

[FRL–5888–3]

Privacy Act of 1974; Research Grant, Cooperative Agreement, and Fellowship Application Files System of Records

AGENCY: Environmental Protection Agency (EPA).

ACTION: Proposed new Privacy Act system of records.

SUMMARY: The United States Environmental Protection Agency (EPA) is publishing a notice for public comment on a system of records subject to the Privacy Act of 1974, 5 U.S.C. 552a. This system is entitled ''Research Grant, Cooperative Agreement, and Fellowship Application Files.'' Additional information on this system is described in the Supplementary Information section of this notice.

EFFECTIVE DATE: This proposed action will be effective, without further notice on October 27, 1997, unless comments are received which result in a contrary determination.

ADDRESSES: Comments should be addressed to Director, National Center for Environmental Research and Quality Assurance (Mail Code 8701), U.S. Environmental Protection Agency, 401 M St., SW, Washington, DC 20460.

FOR FURTHER INFORMATION CONTACT: Dr. Robert E. Menzer, Senior Science Advisor, National Center for Environmental Research and Quality Assurance (Mail Code 8701), U.S. Environmental Protection Agency, 401 M St., SW, Washington, DC 20460. Telephone: (202) 260–5779.

SUPPLEMENTARY INFORMATION: The purpose of this system of records is to assist EPA in conducting and documenting the receipt and review of applications and awards of research grants to the most meritorious applicants in response to solicitations issued by the Office of Research and Development in furtherance of its Science to Achieve Results (STAR) program. The system includes application files and computer-generated records developed in connection with the review and decision process for awarding grants under the terms of the Federal Grant and Cooperative Agreement Act of 1977, 41 U.S.C. 501 et seq. Application files are comprised of (1) the submitted application, which includes the names and resumes of proposed investigators, (2) peer reviewers' comments on the application, and (3) documentation of the decision process on the application. Computer-generated records include data regarding the administrative management of the application in the peer review process.

This system of records contains records retrieved by the names of the grant principal investigators, universities, not-for-profit research organizations, and other organizations. Only information retrieved by the names of individuals is covered by this Privacy Act notice.

Dated: August 28, 1997.

Alvin M. Pesachowitz,

Acting Assistant Adminstrator for Administration and Resources Management and Chief Information Officer.

EPA–36

SYSTEM NAME:

Research Grant, Cooperative Agreement, and Fellowship Application Files System of Records, EPA/ORD.

SECURITY CLASSIFICATION:

None.

SYSTEM LOCATION:

National Center for Environmental Research and Quality Assurance, Office of Research and Development, Waterside Mall, 401 M St., SW, Washington, DC 20460.

CATEGORIES OF INDIVIDUALS COVERED BY THE SYSTEM:

Individuals (principal investigators) who request or have previously requested support from the ORD research grants programs of the U.S. Environmental Protection Agency, either individually or through an academic or other institution.

CATEGORIES OF RECORDS IN THE SYSTEM:

The names of the principal investigators, the proposals and their identifying numbers, supporting data from the academic institutions or other applicants, proposal evaluations from peer reviewers, review records, financial data, and other material related to evaluation of applications.

AUTHORITY FOR MAINTENANCE OF THE SYSTEM:

44 U.S.C. 3101; Federal Grant and Cooperative Agreement Act, 41 U.S.C. 501 et seq.; the Clean Air Act, as amended, 42 U.S.C. 1857 et seq.; the Federal Water Pollution Control Act, as amended, 33 U.S.C. 1254 et seq.; the Public Health Service Act, as amended, 42 U.S.C. 241 et seq.; the Solid Waste Disposal Act, as amended by the Resource Conservation and Recovery Act of 1976, 42 U.S.C. 6901 et seq.; the Federal Insecticide, Fungicide, and Rodenticide Act, as amended, 7 U.S.C. 136 et seq.; and the Grant Act, 42 U.S.C. 1891 et seq.

PURPOSE(S):

The purpose of this system of records is to assist EPA in conducting and documenting the receipt and review of applications and award of research grants to the most meritorious applicants in response to solicitations issued by the Office of Research and Development in furtherance of its Science to Achieve Results (STAR) program.

ROUTINE USES OF RECORDS MAINTAINED IN THE SYSTEM, INCLUDING CATEGORIES OF USERS AND THE PURPOSES OF SUCH USES:

Disclosure of information from this system of records may be made as follows:

1. To a Member of Congress or a congressional office from the record of an individual in response to an inquiry from that Member or office made at the request of the individual to whom the record pertains.

2. To Federal contractors, grantees, volunteers, and other individuals who have been engaged to assist the Federal Government in the performance of a contract, grant, cooperative agreement, or other activity related to this system of records and who need to have access to the records in order to perform that activity.

3. To a Federal agency which has requested information relevant to its decision in connection with the hiring or retention of an employee; the reporting of an investigation on an employee; the letting of a contract; or the issuance of a security clearance, license, grant, or other benefit.

4. To a Federal, State, or local agency where necessary to enable EPA to obtain information relevant to an EPA decision concerning the hiring or retention of an employee; the letting of a contract; or the issuance of a security clearance, license, grant, or other benefit.

5. To an appropriate Federal, State, local, or foreign agency responsible for investigating, prosecuting, enforcing, or implementing a statute, rule, regulation, or order, where there is an indication of a violation or potential violation of the statute, rule, regulation, or order and the information disclosed is relevant to the matter.

6. To the Department of Justice to the extent that each disclosure is compatible with the purpose for which the record was collected and is relevant and necessary to litigation or anticipated litigation in which one of the following is a party or has an interest: (a) EPA or any of its components, (b) an EPA employee in his or her official capacity, (c) an EPA employee in his or her individual capacity where the Department of Justice is representing or considering representation of the employee, or (d) the United States where EPA determines that the litigation is likely to affect the agency.

7. In a proceeding before a court, other adjudicative body or grand jury, or in an administrative or regulatory proceeding, to the extent that each disclosure is compatible with the purpose for which the record was collected and is relevant and necessary to the proceeding in which one of the following is a party or has an interest: (a) EPA or any of its components, (b) an EPA employee in his or her official capacity, (c) an EPA employee in his or her individual capacity where the Department of Justice is representing or considering representation of the employee, or (d) the United States where EPA determines that the litigation is likely to affect the agency. Such disclosures include, but are not limited to, those made in the course of presenting evidence, conducting settlement negotiations, and responding to subpoenas and requests for discovery.

8. To representatives of the General Services Administration and the National Archives and Records Administration who are conducting records management inspections under the authority of 44 U.S.C. 2904 and 2906.

9. To qualified reviewers for their opinion and evaluation of applicants and their proposals as part of the application review process.

10. To other Federal government agencies and private-sector organizations regarding applicants or nominees in order to coordinate joint programs between Federal agencies, State or local government agencies, and/or private-sector organizations.

11. To the applicant institution for purposes of obtaining data regarding the application review process or award decisions, or administering grant awards.

POLICIES AND PRACTICES FOR STORING, RETRIEVING, ACCESSING, RETAINING, AND DISPOSING OF RECORDS IN THE SYSTEM:

STORAGE:

Various parts of the system are maintained on computer and/or in hard copy files.

RETRIEVABILITY:

Information is retrieved by the name of the principal investigator. Computer files may also be retrieved by various data elements in the database.

SAFEGUARDS:

All records are maintained in secured areas with restricted access or are accessed by unique passwords or log-in procedures. Only EPA personnel and agency contractors with a need-to-know in order to perform their duties may access the information.

RETENTION AND DISPOSAL:

Files are maintained in accordance with approved record retention schedules. Awarded proposals are transferred to the Federal Records Center one year after closeout where they are retained for an additional six years. Declined proposals are destroyed three years after they are declined.

SYSTEM MANAGER(S) AND ADDRESS:

Director, Peer Review Division, National Center for Environmental Research and Quality Assurance Mail (Code 8725), USEPA, 401 M St., SW, Washington, DC 20460.

NOTIFICATION PROCEDURE:

Contact the system manager at the above address. You may be required to provide information to verify your identity.

RECORD ACCESS PROCEDURE:

Same as ''Notification Procedure,'' above. In addition, please specify the record you wish to access.

CONTESTING RECORD PROCEDURES:

Same as ''Notification Procedure,'' above. In addition, please specify the record you wish corrected, the requested correction, and justification for the correction.

RECORD SOURCE CATEGORIES:

Information is obtained from the principal investigators, academic institutions or other applicants, peer reviewers, and EPA and other Federal agency personnel.

SYSTEMS EXEMPTED FROM CERTAIN PROVISIONS OF THE ACT:

The portions of this system consisting of investigatory material which would identify persons providing evaluations of EPA grant applicants and applications have been exempted pursuant to 5 U.S.C. 552a(k)(5). Regulations exempting this system from certain provisions of the Privacy Act will be published separately in the **Federal Register** in accordance with the requirements of 5 U.S.C. 553(b), (c), and (e).

[FR Doc. 97–24212 Filed 9–12–97; 8:45 am]

BILLING CODE 6560–50–P

ENVIRONMENTAL PROTECTION AGENCY

[FRL–5888–2]

Privacy Act of 1974; ORD Peer Review Panelist Information System (PRPIS) System of Records

AGENCY: Environmental Protection Agency (EPA).

ACTION: Proposed new Privacy Act system of records.

SUMMARY: The United States Environmental Protection Agency (EPA) is publishing a notice for public comment on a system of records subject to the Privacy Act of 1974, 5 U.S.C. 552a. This system is entitled ''ORD Peer Review Panelist Information System (PRPIS).'' Additional information on this system is described in the Supplementary Information section of this notice.

EFFECTIVE DATE: This proposed action will be effective, without further notice on October 27, 1997, unless comments are received which result in a contrary determination.

ADDRESSES: Comments should be addressed to Director, National Center for Environmental Research and Quality Assurance (Mail Code 8701), U.S. Environmental Protection Agency, 401 M St., SW. Washington, DC 20460.

FOR FURTHER INFORMATION CONTACT: Dr. Robert E. Menzer, Senior Science Advisor, National Center for Environmental Research and Quality Assurance (Mail Code 8701), U.S. Environmental Protection Agency, 401 M St., SW. Washington, DC 20460. Telephone: (202) 260–5779.

SUPPLEMENTARY INFORMATION: EPA uses the services of peer reviewers from the scientific community to assist in selecting the most meritorious applications from pools of applications or assessing the quality and performance of awarded grants, cooperative agreements, and fellowships. The purpose of this system of records is to assist EPA in conducting and documenting the review of applications through the use of

contracted peer reviewers. The system includes reviewer files and computer-generated records developed in connection with the review and decision process for awarding grants under the terms of the Federal Grant and Cooperative Agreement Act of 1977. Reviewer files are comprised of (1) personal data about potential reviewers, who are scientists and engineers in the academic and private sectors, (2) information about their educational background and expertise, (3) records of their employment, (4) records of their publications and other accomplishments, (5) conflict of interest and confidentially certifications, and (6) records of panel participation. Computer-generated records include data regarding the administrative management of the peer review process. This system of records contains records retrieved by the names of the peer reviewers, universities, not-for-profit research organizations, and other organizations. Only information retrievable by the names of individuals is covered by this Privacy Act notice.

Dated: August 28, 1997.

Alvin M. Pesachowitz,

Acting Assistant Adminstrator for Administration and Resources Management and Chief Information Officer.

EPA–37

SYSTEM NAME:

ORD Peer Review Panelist Information System (PRPIS) System of Records.

SECURITY CLASSIFICATION:

None.

SYSTEM LOCATION:

National Center for Environmental Research and Quality Assurance, Office of Research and Development, Waterside Mall, 401 M St., SW. Washington, DC 20460.

CATEGORIES OF INDIVIDUALS COVERED BY THE SYSTEM:

Peer reviewers who evaluate grant, fellowship, and cooperative agreement applicants and their applications.

CATEGORIES OF RECORDS IN THE SYSTEM:

The names of the peer reviewers, supporting data about the academic institutions or other institutional affiliations of the peer reviewers, proposal evaluations from peer reviewers, review records, contract and financial data, committee or panel discussion summaries, and other agency records containing or reflecting comments on the applications or the applicants from peer reviewers.

AUTHORITY FOR MAINTENANCE OF THE SYSTEM:

44 U.S.C. 3101; Federal Grant and Cooperative Agreement Act, 41 U.S.C. 501 et seq.; the Clean Air Act, as amended, 42 U.S.C. 1857 et seq.; the Federal Water Pollution Control Act, as amended, 33 U.S.C. 1254 et seq.; the Public Health Service Act, as amended, 42 U.S.C. 241 et seq.; the Solid Waste Disposal Act, as amended by the Resource Conservation and Recovery Act of 1976, 42 U.S.C. 6901 et seq.; the Federal Insecticide, Fungicide, and Rodenticide Act, as amended, 7 U.S.C. 136 et seq.; and the Grant Act, 42 U.S.C. 1891 et seq.

PURPOSE(S):

The purpose of this system of records is to assist EPA in conducting and documenting the review of applications for research grants, cooperative agreements, and fellowships through the use of peer reviewers from the scientific community.

ROUTINE USES OF RECORDS MAINTAINED IN THE SYSTEM, INCLUDING CATEGORIES OF USERS AND THE PURPOSES OF SUCH USES:

Disclosure of information from this system of records may be made as follows:

1. To a Member of Congress or a congressional office from the record of an individual in response to an inquiry from that Member or office made at the request of the individual to whom the record pertains.

2. To EPA contractors, grantees, volunteers, and other individuals who have been engaged to assist the Federal Government in the performance of a contract, grant, cooperative agreement, or other activity related to this system of records and who need to have access to the records in order to perform that activity.

3. To a Federal agency which has requested information relevant to its decision in connection with the hiring or retention of an employee; the reporting of an investigation on an employee; the letting of a contract; or the issuance of a security clearance, license, grant, or other benefit.

4. To a Federal, State, or local agency where necessary to enable EPA to obtain information relevant to an EPA decision concerning the hiring or retention of an employee; the letting of a contract; or the issuance of a security clearance, license, grant, or other benefit.

5. To an appropriate Federal, State, local, or foreign agency responsible for investigating, prosecuting, enforcing, or implementing a statute, rule, regulation, or order, where there is an indication of a violation or potential violation of the statute, rule, regulation, or order and the information disclosed is relevant to the matter.

6. To the Department of Justice to the extent that each disclosure is compatible with the purpose for which the record was collected and is relevant and necessary to litigation or anticipated litigation in which one of the following is a party or has an interest: (a) EPA or any of its components, (b) an EPA employee in his or her official capacity, (c) an EPA employee in his or her individual capacity where the Department of Justice is representing or considering representation of the employee, or (d) the United States where EPA determines that the litigation is likely to affect the agency.

7. In a proceeding before a court, other adjudicative body or grand jury, or in an administrative or regulatory proceeding, to the extent that each disclosure is compatible with the purpose for which the record was collected and is relevant and necessary to the proceeding in which one of the following is a party or has an interest: (a) EPA or any of its components, (b) an EPA employee in his or her official capacity, (c) an EPA employee in his or her individual capacity where the Department of Justice is representing or considering representation of the employee, or (d) the United States where EPA determines that the litigation is likely to affect the agency. Such disclosures include, but are not limited to, those made in the course of presenting evidence, conducting settlement negotiations, and responding to subpoenas and requests for discovery.

8. To representatives of the General Services Administration and the National Archives and Records Administration who are conducting records management inspections under the authority of 44 U.S.C. 2904 and 2906.

9. To Federal government agencies with whom EPA cooperates in joint grant programs.

POLICIES AND PRACTICES FOR STORING, RETRIEVING, ACCESSING, RETAINING, AND DISPOSING OF RECORDS IN THE SYSTEM:

STORAGE :

Various parts of the system are maintained on computer and/or in hard copy files.

RETRIEVABILITY:

Information is retrieved from hard copy and computer files by the names of peer reviewers. Computer records may also be retrieved by non-personal data elements.

SAFEGUARDS:

All records are maintained in secured areas with restricted access or are accessed by unique passwords or log-in procedures. Only EPA personnel and agency contractors with a need-to-know in order to perform their duties may access the information.

RETENTION AND DISPOSAL:

File is cumulative and is maintained indefinitely.

SYSTEM MANAGER(S) AND ADDRESS:

Director, Peer Review Division, National Center for Environmental Research and Quality Assurance Mail (Code 8703), USEPA, 401 M St., SW, Washington, DC 20460.

NOTIFICATION PROCEDURE:

Contact the system manager at the above address. You may be required to provide information to verify your identity.

RECORD ACCESS PROCEDURE:

Same as ''Notification Procedure,'' above. In addition, please specify the record you wish to access.

CONTESTING RECORD PROCEDURES:

Same as ''Notification Procedure,'' above. In addition, please specify the record you wish corrected, the requested correction, and justification for the correction.

RECORD SOURCE CATEGORIES:

Information is obtained from the individual reviewers and EPA and other Federal agency personnel.

SYSTEMS EXEMPTED FROM CERTAIN PROVISIONS OF THE ACT:

None.

[FR Doc. 97–24413 Filed 9–12–97; 8:45 am]

BILLING CODE 6560–50P

FEDERAL COMMUNICATIONS COMMISSION

[CC Docket 96–45; DA 97–1957]

Common Carrier Bureau Seeks Comment on Universal Service Support Distribution Options for Schools, Libraries, and Rural Health Care Providers

Released: September 10, 1997.

Potential for Exhaustion of Funds

On May 8, 1997, the Federal Communications Commission (Commission) released a Report and Order on Universal Service CC Docket No. 96–45, FCC 97–157 62 FR 32862 (June 17, 1997) (*Order*).[1] In the *Order,* the Commission determined that funds for eligible schools, libraries, and rural health care providers will be distributed on a first-come first-served basis beginning January 1, 1998. The Commission also established a $2.25 billion annual cap on universal service support for schools and libraries and a $400 million annual cap for rural health care providers. Eligible schools and libraries will be required to participate in a competitive bidding process to select their service providers and will be permitted to submit funding requests once they have made agreements for specific eligible services. The Administrator will commit funds based on those agreements on a first-come first-served basis until only $250 million in funds remains available. Thereafter, a system of priorities will govern the distribution of the remaining $250 million to provide an opportunity for only the most economically disadvantaged schools and libraries to receive support. In light of the need to implement the necessary administrative processes, funding for the period beginning January 1, 1998 and ending June 30, 1998 will be limited to $1 billion for schools and libraries. Similarly, disbursement to rural health care providers will be limited to $100 million in the first quarter of 1998.

In response to concerns expressed about distributing support to schools, libraries, and rural health care providers on a first-come, first-serve basis, we seek comment on the following issues:

(1) Whether a ''window'' period should be established in which all beneficiaries filing within that period would be given equal priority. We seek comment on the length of the period in which any such window should remain open and as to whether there should be a ''rolling'' or ongoing series of windows, *e.g.,* a series of two-week windows during which all beneficiaries filing within that two-week period would be given equal priority.

(2) Whether to clarify that the rules of priority for distributing funds to schools and libraries set forth in § 54.507 of the Commission's rules, 47 CFR 54.507, apply to the $1 billion available between January 1, 1998 through June 30, 1998. That is, if expenditures between January 1, 1998 and June 30, 1998 reach the level where only $250 million remains before the $1 billion cap is reached, the remaining funds will be distributed in accordance with the rules of priority.[2]

(3) We also seek comment on whether a mechanism to prioritize requests from rural health care providers should be adopted in the event that requests exceed available funds. For example, should a mechanism be established to ensure that funds are distributed to rural health care providers located in all regions of the country? We seek comment on whether such a mechanism should be permanent or should apply only in the first quarter of 1998, when collection for rural health care is limited to $100 million.

(4) We also seek comment on whether other methods might ensure a broad and fair distribution of funds, particularly at the earliest stages of these support programs.

Allocation of Aggregated Requests for Funds

In the *Order,* the Commission held that schools and libraries may apply for funds on an individual basis, by school district, by state, or by consortium. In the event that a school district or a state applies for support on behalf of its schools, the school district or state may compute the discounts on an individual school basis or may compute an average discount. The state or school district shall strive to ensure that each school receives the full benefit of the discount to which it is entitled. On July 31, 1997, the ''E-Rate Implementation Working Group,'' comprised of the U.S. Department of Education, Institute of Museum and Library Services, National Telecommunications and Information Administration, Rural Utilities Service, and Education and Library Network Coalition, filed a report with the Commission in CC Docket 96–45 in response to the Commission's request for recommendations on certain issues regarding universal service support for schools and libraries.[3] The Working Group Report proposes a method for allocating support to individual institutions that apply for funds on an aggregated (*e.g.,* statewide or districtwide) basis. We seek comment on that proposal. Copies of the report

[1] Federal-State Joint Board on Universal Service, *Report and Order,* CC Docket No. 96–45, FCC 97–157 (released May 8, 1997) 62 FR 32862 (June 17, 1997).

[2] Although the text of the *Order* discusses the trigger mechanism only with respect to the full $2.25 billion cap per funding year, we note that § 54.507(g) of the Commission's rules states that the trigger mechanism applies when only $250 million remains in any funding year, which includes the period from January 1, 1998 through June 30, 1998.

[3] U.S. Department of Education, Institute of Museum and Library Services, National Telecommunications and Information Administration, Rural Utilities Service, Education and Library Networks, *Report by the E-Rate Implementation Working Group* (July 31, 1997) (Working Group Report).

are available for review and copying at the FCC Reference Center, Room 239, 1919 M Street, N.W., Washington, D.C. 20554 or on the Internet at www.ed.gov/Technology.

Procedure for Filing

Comments should be filed in CC Docket No. 96–45 on or before September 25, 1997, and should include the DA number shown on this Public Notice. Pursuant to § 1.3 of the Commission's rules, 47 CFR 1.3, we find good cause to waive § 1.415 (c) of the Commission's rules, 47 CFR 1.415, providing for replies to original comments. Dispensing with reply comments is crucial due to the urgent need to provide definitive guidance to the schools, libraries, and rural health care providers that are applying for services supported by the universal service support mechanisms currently scheduled to begin by January 1, 1998. Interested parties must file an original and four copies of their comments with the Office of Secretary, Federal Communications Commission, Room 222, 1919 M Street, N.W., Washington, D.C. 20554. Parties should send eight copies of their comments to Sheryl Todd, Universal Service Branch, Accounts and Audits Division, Federal Communications Commission, 2100 M St, N.W., 8th Floor, Washington, D.C. 20554. Parties should send one copy of their comments to the Commission's copy contractor, International Transcription Service, 1231 20th Street, N.W., Washington, D.C. 20036.

Pursuant to § 1.1206 of the Commission's Rules, 47 CFR 1.1206, this proceeding will be conducted as a permit-but-disclose proceeding in which *ex parte* communications are permitted subject to disclosure.

For further information, please contact: Richard D. Smith or Lori Wright, Common Carrier Bureau, (202) 418–7400.

Federal Communications Commission.

William F. Caton,

Acting Secretary.

[FR Doc. 97–24554 Filed 9–12–97; 8:45 am]

BILLING CODE 6712–01–U

FEDERAL COMMUNICATIONS COMMISSION

Public Information Collection Approved by Office of Management and Budget

September 10, 1997.

The Federal Communications Commission (FCC) has received Office of Management and Budget (OMB) approval for the following public information collection pursuant to the Paperwork Reduction Act of 1995, Pub. L. 96–511. An agency may not conduct or sponsor a collection of information unless it displays a currently valid control number. Not withstanding any other provisions of law, no person shall be subject to any penalty for failing to comply with a collection of information subject to the Paperwork Reduction Act (PRA) that does not display a valid control number. Questions concerning the OMB control numbers and expiration dates should be directed to Judy Boley, Federal Communications Commission, (202) 418–0214.

Federal Communications Commission

OMB Control No.: 3060–0319.

Expiration Date: 9/30/2000.

Title: Application for Assignment of Authorization or Consent to Tansfer of Control of a Licensee.

Form No.: 490.

Estimated Annual Burden: 32,063 annual hour; average .5–3 hours per respondent; 28,500 respondents.

Description: FCC Form 490 is filed to solicit Commission approval to assign a radio station authorization to another party or to transfer control of a licensee. The requested information is used by the Commission in carrying out its duties set forth in section 308, 298 and 310 of the Communications Act. This collection is being revised to account for the changes proposed in the Fifth Notice of Proposed Rulemaking, Use of the 220–222 MHz Band by the Private Land Mobile Radio Service, the Commission concluded that any holder of a Phase II EA, Regional or nationwide 220 MHz license will be permitted to partition portions of its authorization. In this collection the Commission also received generic approval from OMB to use this form in future disaggregation and partitioning for a variety of spectrum based services licensed by the Commission. Specific Rules will be adopted in Reports and Orders or by Public Notice for each service subject to disaggregation and partitioning.

OMB Control No.: 3060–0105.

Expiration Date: 9/30/2000.

Title: Licensee Qualification Report.

Form No.: FCC 430.

Estimated Annual Burden: 21,511 annual hours; .5–2 hours per respondent; 24,583 respondents.

Description: FCC Form 430 enables the Commission to determine whether applicants are legally qualified to become or remain common carrier telecommunications licensees. Without this information, the Commission would be unable to fulfill its responsibilities under the Communications Act to make a finding as to the legal qualifications of an applicant or licensee. To reduce paperwork applicants may submit letters in lieu of completing the FCC 430 in those cases where there is no change to the required information. This collection is being revised to account for the changes proposed in the Fifth Notice of Proposed Rulemaking, Use of the 220–222 MHz Band by the Private Land Mobile Radio Service, the Commission concluded that any holder of a Phase II EA, Regional or nationwide 220 MHz license will be permitted to partition portions of its authorization. In the Fifth Notice of Proposed Rulemaking, Redesignation of 27.5 GHz Frequency Band, Establishing Rules and Policies for LMDS the Commission proposed that this form be used to complete the disaggregation and partitioning of LMDS. In this collection the Commission received generic approval from OMB to use this form in future disaggregation and partitioning for a variety of spectrum based services licensed by the Commission. Specific rules will be adopted in reports and orders or by public notice for each service subject to disaggregation and partitioning.

Federal Communications Commission.

William F. Caton,

Acting Secretary.

[FR Doc. 97–24353 Filed 9–12–97; 8:45 am]

BILLING CODE 6712–01–P

FEDERAL COMMUNICATIONS COMMISSION

[CS Docket No. 97–55; FCC 97–321]

Commission Seeks Comment on Revised Industry Proposal for Rating Video Programming

AGENCY: Federal Communications Commission.

ACTION: Notice.

SUMMARY: The Commission has adopted a public notice requesting comment on the revised industry proposal for the establishment of a voluntary video programming rating system. The revised industry proposal changes some of the descriptors associated with the age-based categories of programming, and in certain categories, adds symbols that indicate the type of material included in a particular program. In addition, the revised proposal states that the icons and associated content symbols will appear for 15 seconds at the beginning of all rated programming and that the size of the icons will be increased. According to the revised proposal, five representatives of the advocacy community will also be added to the

Oversight Monitoring Board, which was established under the original proposal to ensure that television programming ratings are applied accurately and consistently. The Public Notice requests comment as to whether the revised industry proposal meets the standards set forth in section 551(e) of the 1996 Act.

DATES: Submit comments on or before October 6, 1997. Submit reply comments on or before October 20, 1997.

ADDRESSES: Send comments and reply comments to: Office of the Secretary, Federal Communications Commission, 1919 M Street, N.W., Washington, D.C. 20554. In addition, interested parties may send comments and reply comments on diskette to Rick Chessen, Cable Services Bureau, 1919 M Street, N.W., Washington, D.C. 20554. Informal comments may be sent to the Office of the Secretary or via electronic mail to: vchip@fcc.gov.

FOR FURTHER INFORMATION CONTACT: Rick Chessen, Cable Services Bureau, (202) 418–7200.

SUPPLEMENTARY INFORMATION: The main text of this Public Notice is included below. The full text of this Public Notice is available for inspection and copying during normal business hours in the FCC Reference Center (Room 239), 1919 M Street, N.W., Washington, D.C. 20554, and may be purchased from the Commission's copy contractor, International Transcription Services, Inc. (202) 857–3800, 1919 M Street, N.W., Washington, D.C. 20554.

1. On January 17, 1997, the National Association of Broadcasters (''NAB''), the National Cable Television Association (''NCTA'') and the Motion Picture Association of America (''MPAA'') submitted a joint proposal to the Commission describing a voluntary system for rating video programming (the ''industry proposal''). On February 7, 1997, the Commission issued a Public Notice seeking comment on the industry proposal. *See* Public Notice, *Commission Seeks Comment on Industry Proposal for Rating Video Programming,* CS Docket No. 97–55, FCC 97–34, 12 FCC Rcd. 3260 (February 7, 1997); Public Notice, *Modification of Industry Proposal for Rating Video Programming,* CS Docket No. 97–55, DA 97–518, 12 FCC Rcd. 3135 (March 12, 1997)(noting change in symbol for the category ''Mature Audience Only'' from ''TV–M'' to ''TV–MA''). The Commission subsequently received formal and informal comments from interested parties regarding the industry proposal.

2. On August 1, 1997, NAB, NCTA and MPAA notified the Commission that certain elements have been added to the video programming ratings system described in the January 17, 1997 industry proposal (the ''revised industry proposal''). Generally, the revised industry proposal changes some of the descriptors associated with the age-based categories of programming and, in certain categories, adds symbols that indicate the type of material included in a particular program. The revised industry proposal states that the revised guidelines are supported by leading family and child advocacy groups, as well as television broadcasters, cable systems and networks, and television production companies.

3. Under the revised industry proposal, television programming would continue to fall into one of six categories, with symbols added indicating the particular content of each program, as appropriate. For programs designed solely for children, the general categories are:

TV–Y (All Children—This program is designed to be appropriate for all children). Whether animated or live-action, the themes and elements in this program are specifically designed for a very young audience, including children from ages 2–6. This program is not expected to frighten younger children.

TV–Y7 (Directed to Older Children—This program is designed for children age 7 and above). It may be more appropriate for children who have acquired the developmental skills needed to distinguish between make-believe and reality. Themes and elements in this program may include mild fantasy or comedic violence, or may frighten children under the age of 7. Therefore, parents may wish to consider the suitability of this program for their very young children. Note: For those programs where fantasy violence may be more intense or more combative than other programs in this category, such programs will be designated TV–Y7–FV.

For programs designed for the entire audience, the general categories are:

TV–G (General Audience—Most parents would find this program suitable for all ages). Although this rating does not signify a program designed specifically for children, most parents may let younger children watch this program unattended. It contains little or no violence, no strong language and little or no sexual dialogue or situations.

TV–PG (Parental Guidance Suggested—This program contains material that parents may find unsuitable for younger children). Many parents may want to watch it with their younger children. The theme itself may call for parental guidance and/or the program contains one or more of the following: moderate violence (V), some sexual situations (S), infrequent coarse language (L), or some suggestive dialogue (D).

TV–14 (Parents Strongly Cautioned—This program contains some material that many parents would find unsuitable for children under 14 years of age). Parents are strongly urged to exercise greater care in monitoring this program and are cautioned against letting children under the age of 14 watch unattended. This program contains one or more of the following: intense violence (V), intense sexual situations (S), strong coarse language (L), or intensely suggestive dialogue (D).

TV–MA (Mature Audience Only—This program is specifically designed to be viewed by adults and therefore may be unsuitable for children under 17). This program contains one or more of the following: graphic violence (V), explicit sexual activity (S), or crude indecent language (L).

4. The revised industry proposal also states that the icons and associated content symbols will appear for 15 seconds at the beginning of all rated programming, and that the size of the icons will be increased from those shown currently. In addition, the revised industry proposal states that five representatives of the advocacy community will be added to the Oversight Monitoring Board. The Oversight Monitoring Board was established in the original industry proposal to ensure that the ratings are applied accurately and consistently to television programming. The ratings information will continue to be supplied by cable network and television stations to newspapers and publishers of printed and electronic program guides so that the ratings can be included in program guides, and local television stations will retain the right to substitute the rating they deem appropriate for their audience for ratings assigned by producers and distributors. The guidelines will be applied to all television programming except for news, sports and unedited MPAA-rated movies that are shown on premium cable channels. The latter will continue to carry their original MPAA ratings and the additional advisories currently used by several premium services.

5. The above is only a general description of certain aspects of the revised industry proposal. For a more

detailed description, interested parties are directed to review a complete copy of the revised industry proposal. The revised industry proposal is attached to this Public Notice as an Appendix. Copies may also be obtained from the Commission's Public Reference Room, Room 239, 1919 M Street, N.W., Washington, D.C., or from the Commission's Internet site (http:\\www.fcc.gov\vchip), or by calling ITS, the Commission's transcription service, at (202) 857–3800.

6. Under section 551(e) of the Telecommunications Act of 1996 (the ''1996 Act''), the Commission must determine, in consultation with appropriate public interest groups and interested individuals from the private sector, whether: (1) Video programming distributors have established, within one year of the 1996 Act's enactment, voluntary rules for rating video programming that contains sexual, violent or other indecent material about which parents should be informed before it is displayed to children; (2) such voluntary rules are acceptable to the Commission; and (3) video programming distributors have agreed voluntarily to broadcast signals that contain ratings of such programming. If the Commission determines that the industry proposal fails to satisfy these criteria, the Commission must establish: (1) On the basis of recommendations from an advisory committee, guidelines and recommended procedures for the identification and rating of video programming that contains violent, sexual or other indecent material about which parents should be informed before it is displayed to children; and (2) in consultation with the television industry, rules requiring the distributors of video programming that has been rated to transmit such rating to permit parents to block the display of video programming that they have determined is inappropriate for their children.

7. Interested parties are invited to comment on whether the revised industry proposal meets the standards set forth in section 551(e) of the 1996 Act. In particular, we seek comment on: (1) Whether video programming distributors have established voluntary rules for rating video programming that contains sexual, violent or other indecent material about which parents should be informed before it is displayed to children; (2) whether such voluntary rules are ''acceptable''; (3) whether video programming distributors have agreed voluntarily to broadcast signals that contain such ratings; (4) whether the revised industry proposal satisfies Congress' concerns in enacting the statute; and (5) whether the Commission should determine the acceptability of any alternative ratings systems used by video programming distributors. We will incorporate the comments filed regarding the original industry proposal in the record for the revised industry proposal, although we encourage parties to file new or revised comments to the extent they are concerned with elements of the industry proposal that have been modified.

8. To file formal comments in this proceeding, interested parties must file an original plus four copies of all comments in CS Docket No. 97–55. If an interested party would like each Commissioner to receive a personal copy of its comments, it must file an original plus nine copies. Comments are due on October 6, 1997, and reply comments are due on October 20, 1997. Interested parties should send comments and reply comments to: Office of the Secretary, Federal Communications Commission, 1919 M Street, N.W. Washington, D.C. 20554.

9. Parties are also asked to submit formal comments and reply comments on diskette. Such diskette submissions would be in addition to, and not a substitute for, the formal filing requirements addressed above. Interested parties submitting diskettes should submit them to Rick Chessen of the Cable Services Bureau, 1919 M Street, N.W., Washington, D.C. 20554. Such a submission should be on a 3.5 inch diskette formatted in an IBM compatible form using MS DOS 5.0 and WordPerfect 5.1 software. The diskette should be submitted in ''read only'' mode. The diskette should be clearly labeled with the party's name, the words ''Video Programming Ratings Proposal,'' the docket number of the Commission proceeding, the type of pleading (comments or reply comments), the name of the file(s), and the date of submission. The diskette should be accompanied by a cover letter. The Commission will post all submissions received on diskette on its Internet site (http:\\www.fcc.gov\vchip).

10. Interested parties wishing to file informal comments in this proceeding may send them to the Office of the Secretary at the address noted above, or may send them via electronic mail to: vchip@fcc.gov (this electronic mail address is also accessible through the Commission's Internet site). The Commission will post electronic mail submissions in their entirety on its Internet site. All formal and informal comments will be available for public inspection during regular business hours in the FCC Reference Center, Room 239, Federal Communications Commission, 1919 M Street N.W., Washington D.C. 20554.

11. This proceeding will be treated as a ''permit-but-disclose'' proceeding subject to the ''permit-but-disclose'' requirements under § 1.1206(b) of the rules. 47 CFR 1.1206(b), as revised. Ex parte presentations are permissible if disclosed in accordance with Commission rules, except during the Sunshine Agenda period when presentations, ex parte or otherwise, are generally prohibited. Persons making oral ex parte presentations are reminded that a memorandum summarizing a presentation must contain a summary of the substance of the presentation and not merely a listing of the subjects discussed. More than a one or two sentence description of the views and arguments presented is generally required. See 47 CFR 1.1206(b)(2), as revised. Additional rules pertaining to oral and written presentations are set forth in section 1.1206(b).

12. Accordingly, notice is hereby given of the Commission's consideration of the revised industry proposal submitted by NAB, NCTA and MPAA, and comment is sought regarding such proposal.

Action by the Commission, September 8, 1997, by public notice (FCC 97–321), Chairman Hundt, Commissioners Quello, Ness and Chong.

Federal Communications Commission.

Shirley S. Suggs,

Chief, Publications Branch.

Appendix

August 1, 1997.

Mr. William F. Caton, Secretary, Federal Communications Commission, 1919 M Street, N.W., Washington, D.C. 20554

Re: CS Docket No. 97–55

Dear Mr. Caton: We are formally notifying the Commission by this letter of certain elements we are adding to the system of parental guidelines that the television industry submitted on January 17, 1997. The additions we describe below are supported by television broadcasters, cable systems and networks, and television production companies. We are also pleased that the revised guidelines are supported by leading family and child advocacy groups. These supplements to the existing system of guidelines will be implemented, apart from provisions dealing specifically with the ''V-chip,'' by October 1 of this year.

We are attaching a description of the amended system and statements of the television industry and family and child advocacy groups concerning the revised voluntary TV Parental Guidelines, as well as the agreement between the television

industry and the advocacy community concerning additions to the Guidelines.[1]

We are changing some of the descriptors associated with the six age-based categories of television programming and, in certain categories, adding symbols describing the type of material that is included in a particular program. The program categories we will use after October 1 are: The following categories apply to programs designed solely for children:

TV–Y All Children. This program is designed to be appropriate for all children. Whether animated or live-action, the themes and elements in this program are specifically designed for a very young audience, including children from ages 2–6. This program is not expected to frighten younger children.

TV–Y7 Directed to Older Children. This program is designed for children age 7 and above. It may be more appropriate for children who have acquired the developmental skills needed to distinguish between make-believe and reality. Themes and elements in this program may include mild fantasy violence or comedic violence, or may frighten children under the age of 7. Therefore, parents may wish to consider the suitability of this program for their very young children. Note: For those programs where fantasy violence may be more intense or more combative than other programs in this category, such programs will be designated TV–Y7–FV.

The following categories apply to programs designed for the entire audience:

TV–G General Audience. Most parents would find this program suitable for all ages. Although this rating does not signify a program designed specifically for children, most parents may let younger children watch this program unattended. It contains little or no violence, no strong language and little or no sexual dialogue or situations.

TV–PG Parental Guidance Suggested. This program contains material that parents may find unsuitable for younger children. Many parents may want to watch it with their younger children. The theme itself may call for parental guidance and/or the program contains one or more of the following: moderate violence (V), some sexual situations (S), infrequent coarse language (L), or some suggestive dialogue (D).

TV–14 Parents Strongly Cautioned. This program contains some material that many parents would find unsuitable for children under 14 years of age. Parents are strongly urged to exercise greater care in monitoring this program and are cautioned against letting children under the age of 14 watch unattended. This program contains one or more of the following: intense violence (V), intense sexual situations (S), strong coarse language (L), or intensely suggestive dialogue (D).

TV–MA Mature Audience Only. This program is specifically designed to be viewed by adults and therefore may be unsuitable for children under 17. This program contains one or more of the following: graphic violence (V), explicit sexual activity (S), or crude indecent language (L).

These refinements maintain the broad six-category structure of the system of ratings we previously submitted to the Commission and add symbols indicating the particular content of each program, as appropriate. Together, the category and program-specific content indicators will provide parents with information that will help them make informed decisions about what their children should watch on television.

The icons and associated content symbols will appear for 15 seconds at the beginning of all rated programming, and the size of the icons will be increased from those shown presently.

In addition, five representatives of the advocacy community will be added to the monitoring board which we have established to ensure that the Guidelines are applied accurately and consistently to television programming. This will provide input from representatives of parents and family and child advocacy groups about the way in which the Guidelines operate in practice.

Consistent with the operation of the TV Parental Guidelines since January, cable networks and television stations will supply ratings information to newspapers and publishers of printed and electronic program guides so that the ratings can be included in program guides. Also unchanged is the right of local television stations to substitute the rating they deem appropriate for their audience for ratings assigned by producers and distributors. The TV Parental Guidelines will continue to apply to all television programming except for news and sports and unedited MPAA-rated movies that are shown on premium cable channels. The latter will continue to carry their original MPAA ratings and the additional advisories currently used by several premium services.

Section 551(e)(1) of the Telecommunications Act of 1996, Pub. L. No. 104–104, requires the Commission to determine if ''distributors of video programming have * * * established voluntary rules for rating video programming that contains sexual, violent, or other indecent material about which parents should be informed,'' and that the industry-adopted ratings system is ''acceptable.'' As we pointed out in submitting the TV Parental Guidelines on January 17 and in comments submitted on May 8, 1997, the ratings system we adopted achieved Congress' goals of providing information that would give parents an effective tool to control their children's television viewing, a tool whose effectiveness would become even greater when the ''V–chip'' becomes available.

By adding information to the Guidelines, parents will have additional information to help them decide which television programs their children will watch. Parents who wish to prevent their children from seeing a whole category of programs oriented in theme or content to older viewers will be able to do so; parents who instead are interested in controlling their children's access to particular types of content will also be provided with the information they need. Each network or television station also will continue to have the right to provide additional advisories to parents when they believe their audience will benefit from particular information about a specific program.

When coupled with the ''V-chip,'' the TV Parental Guidelines will allow parents flexible options to ensure that their children see only the programs that they deem suitable for them. The content symbols added to the ratings categories meet many of the concerns expressed in comments to the Commission,[2] and the addition of representatives of advocacy groups to the Oversight Monitoring Board address the concerns of others that decisions about ratings should reflect input from outside the television industry.[3]

The TV Parental Guidelines are voluntary and broadly supported by the television industry which has pledged to begin transmitting ratings information on line 21 of the Vertical Blanking Interval (VBI) within six months. While the Telecommunications Act contemplated that a ratings system would be incorporated into the ''V-chip,'' Congress specifically eschewed any requirement that distributors of programming be required to use that system. The Commission is only authorized to require transmission of blocking codes ''with respect to video programming that has been rated.'' 47 U.S.C. § 303(w)(2). The Conference Report emphasized that ''the conferees do not intend that the Commission require the adoption of the recommended rating system nor that any particular program be rated.'' H. Rep. No. 458, 104th Cong., 2d Sess. 195 (1996)(emphasis added).

Program producers and distributors were thus explicitly left by Congress with the discretion to determine whether they will rate their own programming, subject only to the requirement that they cannot strip ratings information from the VBI. Congress undoubtedly adopted this approach to avoid the obvious constitutional questions that would arise if programmers were required to display government-approved messages about program content. Thus, whether certain program producers or distributors decide that they will not rate programs at all (as some did after the TV Parental Guidelines were adopted last December), or others do not utilize the additional content symbols, has no impact on the decision as to whether the ratings system adopted by the industry is ''acceptable'' under section 551(e)(1).

In order to bring the full benefits of the TV Parental Guidelines to the American people, we urge the Commission promptly to conclude that this system is acceptable and to adopt the technical standards needed for its incorporation into television receivers.

Please direct any questions concerning this matter to Jill Luckett at NCTA, Jack Goodman at NAB, and Cynthia Merrifield at MPAA.

Respectfully submitted,

Jack Valenti,

[1] We are also providing a copy of this submission and the attachments on diskette to the Cable Services Bureau.

[2] *See, e.g.,* Comments of the Center for Media Education, CS Dkt. No. 97–55 (April 8, 1977); Comments of the National Association for Family and Community Education, CS Dkt. No. 97–55 (April 8, 1977).

[3] *See, e.g.,* Comments of Morality in Media, CS Dkt. No. 97–55 (April 8, 1977).

President and CEO, Motion Picture Association of America.

Decker Anstrom,

President and CEO, National Cable Television Association.

Eddie Fritts,

President and CEO, National Association of Broadcasters.

Attachments

cc: Chairman and Commissioners
Meredith J. Jones
Roy J. Stewart
Christopher J. Wright

Agreement on Modifications to the TV Parental Guidelines

July 10, 1997.

1. Content Information: The following content information, where appropriate, will be added to all non-exempt programming to supplement the existing TV Parental Guidelines: in the TV–Y7 category—FV for fantasy violence; in the TV–PG, TV–14 and TV–MA categories—V for violence, S for sexual situations, L for language, and D for dialogue.

2. Descriptions of the Guidelines: Modifications will be made to the category descriptions as specified in Attachment 1.

3. Monitoring Board: Five non-industry members, drawn from the advocacy community and selected by the Chairman, will be appointed to the Monitoring Board as full voting members. Recommendations for appointment to the Board will be offered by advocacy groups and Monitoring Board members.

4. V-chip: The industry and advocacy groups will recommend to the FCC that the MPAA movie rating system and the universal television rating system be the only systems mandated for inclusion on the V-chip.

5. Icons: Larger icons will appear on-screen for 15 seconds at the beginning of all rated programming and through use of a display button thereafter.

6. Assurances: Attachment 2 reflects the agreement reached between the industry and advocacy groups on treatment of the relevant proceedings at the FCC and pending and future legislation.

7. Research and Evaluation: Independent, scientific research and evaluation will be undertaken once the V-chip has been in the marketplace.

8. Effective Date: Networks will begin to rate programming using the new universal television rating system by October 1, 1997. The industry agrees to encode and transmit the rating information in Line 21 of the vertical blanking interval within 180 days of the date of this agreement.

July 10, 1997.

Attachment #1

The following categories apply to programs designed solely for children:

TV–Y All Children.This program is designed to be appropriate for all children. Whether animated or live-action, the themes and elements in this program are specifically designed for a very young audience, including children from ages 2–6. This program is not expected to frighten younger children.

TV–Y7 Directed to Older Children. This program is designed for children age 7 and above. It may be more appropriate for children who have acquired the developmental skills needed to distinguish between make-believe and reality. Themes and elements in this program may include mild fantasy violence or comedic violence, or may frighten children under the age of 7. Therefore, parents may wish to consider the suitability of this program for their very young children. Note: For those programs where fantasy violence may be more intense or more combative than other programs in this category, such programs will be designated TV–Y7–FV.

The following categories apply to programs designed for the entire audience:

TV–G General Audience. Most parents would find this program suitable for all ages. Although this rating does not signify a program designed specifically for children, most parents may let younger children watch this program unattended. It contains little or no violence, no strong language and little or no sexual dialogue or situations.

TV–PG Parental Guidance Suggested. This program contains material that parents may find unsuitable for younger children. Many parents may want to watch it with their younger children. The theme itself may call for parental guidance and/or the program contains one or more of the following: moderate violence (V), some sexual situations (S), infrequent coarse language (L), or some suggestive dialogue (D).

TV–14 Parents Strongly Cautioned. This program contains some material that many parents would find unsuitable for children under 14 years of age. Parents are strongly urged to exercise greater care in monitoring this program and are cautioned against letting children under the age of 14 watch unattended. This program contains one or more of the following: intense violence (V), intense sexual situations (S), strong coarse language (L), or intensely suggestive dialogue (D).

TV–MA Mature Audience Only. This program is specifically designed to be viewed by adults and therefore may be unsuitable for children under 17. This program contains one or more of the following: graphic violence (V), explicit sexual activity (S), or crude indecent language (L).

Attachment #2

July 10, 1997.

The attached modifications of the TV Parental Guideline System have been developed collaboratively by members of the industry and the advocacy community. We find this combined age and content based system to be acceptable and believe that it should be designated as the mandated system on the V-chip and used to rate all television programming, except for news and sports, which are exempt, and unedited movies with an MPAA rating aired on premium cable channels. We urge the FCC to so rule as expeditiously as possible.

We further believe that the system deserves a fair chance to work in the marketplace to allow parents an opportunity to understand and use the system. Accordingly, the undersigned organizations will work to: educate the public and parents about the V-chip and the TV Parental Guideline System; encourage publishers of TV periodicals, newspapers and journals to include the ratings with their program listings; and evaluate the system. Therefore, we urge governmental leaders to allow this process to proceed unimpeded by pending or new legislation that would undermine the intent of this agreement or disrupt the harmony and good faith of this process.

Motion Picture Association of America
National Association of Broadcasters
National Cable Television Association
Center for Media Education
Children's Defense Fund
Children Now
National Association of Elementary School Principals
National Education Association
National PTA
American Medical Association
American Academy of Pediatrics
American Psychological Association

For Immediate Release

Thursday, July 10, 1997

Contacts: Barbara Dixon/Rich Taylor, MPAA, 202–293–1966

Dennis Wharton/John Earnhardt, NAB, 202–429–5350

Torie Clarke/Scott Broyles, NCTA, 202–775–3629

Joint Statement of Motion Picture Association of America

National Association of Broadcasters

National Cable Television Association
Washington, D.C.

The television industry has concluded a long negotiation with public advocacy groups and has come to closure on revisions to the TV PARENTAL GUIDELINES. The following content information, where appropriate, will be added to all non-exempt programming to supplement the existing Guidelines: in the TV–Y7 category—FV for fantasy violence; in the TV–PG, TV–14 and TV–MA categories—V for violence, S for sexual situations, L for language, and D for dialogue.

Leaders in Congress have said no legislation regarding television ratings, content and program scheduling should be enacted for several years, so that parents will have time to understand and deal with V-chips in television sets, a mechanism which gives them the ability to block out programs they may find inappropriate for young children. Additionally, advocacy group leaders have said this process should proceed unimpeded by pending or new legislation that would undermine the intent of our joint agreement or disrupt the harmony and good faith of the process just concluded.

We are grateful to Vice President Gore, to Chairman John McCain, to Chairman Tom Bliley, Chairman Billy Tauzin, Congressman Ed Markey, among others, who were helpful throughout this process. We also wish to thank the parents of Peoria, Illinois who, in a May town hall meeting, shared with us their thoughts on the subject of television ratings.

As the industry declared on February 29, 1996, in announcing its plans to design parental guidelines for television, we repeat now: Parents will be the arbiters of these new TV PARENTAL GUIDELINES, which will be implemented no later than October 1, 1997. Obviously, until there is a sufficient number of television sets equipped with V-chips in American homes, no evaluation can be properly conducted.

[FR Doc. 97–24354 Filed 9–12–97; 8:45 am]

BILLING CODE 6712–01–P

FEDERAL DEPOSIT INSURANCE CORPORATION

Notice of Agency Meeting

Pursuant to the provisions of the ''Government in the Sunshine Act'' (5 U.S.C. 552b), notice is hereby given that at 10:03 a.m. on Tuesday, September 9, 1997, the Board of Directors of the Federal Deposit Insurance Corporation met in closed session to consider matters relating to (1) the Corporation's corporate, supervisory, and liquidation activities, and (2) an administrative enforcement proceeding.

In calling the meeting, the Board determined, on motion of Director Joseph H. Neely (Appointive), seconded by Ms. Julie Williams, acting in the place and stead of Director Eugene A. Ludwig (Comptroller of the Currency), concurred in by Acting Chairman Andrew C. Hove, Jr., that Corporation business required its consideration of the matters on less than seven days' notice to the public; that no earlier notice of the meeting was practicable; that the public interest did not require consideration of the matters in a meeting open to public observation; and that the matters could be considered in a closed meeting by authority of subsections (c)(2), (c)(6), (c)(8), (c)(9)(A)(ii), and (c)(9)(B) of the ''Government in the Sunshine Act'' (5 U.S.C. 552b (c)(2), (c)(6), (c)(8), (c)(9)(A)(ii), and (c)(9)(B)).

The meeting was held in the Board Room of the FDIC Building located in 550 17th Street, NW., Washington, DC.

Dated: September 9, 1997.

Federal Deposit Insurance Corporation.

Valerie J. Best,

Assistant Executive Secretary.

[FR Doc. 97–24474 Filed 9–11–97; 9:35 am]

BILLING CODE 6714–01–M

FEDERAL EMERGENCY MANAGEMENT AGENCY

[FEMA–1186–DR]

Colorado; Amendment to Notice of a Major Disaster Declaration

AGENCY: Federal Emergency Management Agency (FEMA).

ACTION: Notice.

SUMMARY: This notice amends the notice of a major disaster for the State of Colorado, (FEMA–1186–DR), dated August 1, 1997, and related determinations.

EFFECTIVE DATE: September 5, 1997.

FOR FURTHER INFORMATION CONTACT: Magda Ruiz, Response and Recovery Directorate, Federal Emergency Management Agency, Washington, DC 20472, (202) 646–3260.

SUPPLEMENTARY INFORMATION: The notice of a major disaster for the State of Colorado, is hereby amended to include the following areas among those areas determined to have been adversely affected by the catastrophe declared a major disaster by the President in his declaration of August 1, 1997:

Lincoln and Prowers Counties for Public Assistance.

(Catalog of Federal Domestic Assistance No. 83.516, Disaster Assistance)

Dennis H. Kwiatkowski,

Deputy Associate Director, Response and Recovery Directorate.

[FR Doc. 97–24402 Filed 9–12–97; 8:45 am]

BILLING CODE 6718–02–P

FEDERAL EMERGENCY MANAGEMENT AGENCY

[FEMA–1187–DR]

Minnesota; Major Disaster and Related Determinations

AGENCY: Federal Emergency Management Agency (FEMA).

ACTION: Notice.

SUMMARY: This is a notice of the Presidential declaration of a major disaster for the State of Minnesota (FEMA–1187-DR), dated August 25, 1997, and related determinations.

EFFECTIVE DATE: August 25, 1997.

FOR FURTHER INFORMATION CONTACT: Magda Ruiz, Response and Recovery Directorate, Federal Emergency Management Agency, Washington, DC 20472, (202) 646–3260.

SUPPLEMENTARY INFORMATION: Notice is hereby given that, in a letter dated August 25, 1997, the President declared a major disaster under the authority of the Robert T. Stafford Disaster Relief and Emergency Assistance Act (42 U.S.C. 5121 *et seq.*), as follows:

I have determined that the damage in certain areas of the State of Minnesota, resulting from severe storms, high wind, tornadoes, and flooding beginning on June 28, 1997, and continuing through July 27, 1997, is of sufficient severity and magnitude to warrant a major disaster declaration under the Robert T. Stafford Disaster Relief and Emergency Assistance Act (''the Stafford Act''). I, therefore, declare that such a major disaster exists in the State of Minnesota.

In order to provide Federal assistance, you are hereby authorized to allocate from funds available for these purposes, such amounts as you find necessary for Federal disaster assistance and administrative expenses.

You are authorized to provide Individual Assistance, Public Assistance, and Hazard Mitigation in the designated areas. Consistent with the requirement that Federal assistance be supplemental, any Federal funds provided under the Stafford Act for Public Assistance or Hazard Mitigation will be limited to 75 percent of the total eligible costs.

The time period prescribed for the implementation of section 310(a), Priority to Certain Applications for Public Facility and Public Housing Assistance, 42 U.S.C. 5153, shall be for a period not to exceed six months after the date of this declaration.

Notice is hereby given that pursuant to the authority vested in the Director of the Federal Emergency Management Agency under Executive Order 12148, I hereby appoint Dan Bement of the Federal Emergency Management Agency to act as the Federal Coordinating Officer for this declared disaster.

I do hereby determine the following areas of the State of Minnesota to have been affected adversely by this declared major disaster:

The counties of Anoka, Hennepin, Isanti, Kandiyohi, Ramsey, Sherburne, and Wright for Public Assistance and Individual Assistance.

All counties within the State of Minnesota are eligible to apply for assistance under the Hazard Mitigation Grant Program.

(Catalog of Federal Domestic Assistance No. 83.516, Disaster Assistance.)

James L. Witt,

Director.

[FR Doc. 97–24403 Filed 9–12–97; 8:45 am]

BILLING CODE 6718–02–P

FEDERAL EMERGENCY MANAGEMENT AGENCY

[FEMA–1175–DR]

Minnesota; Amendment to Notice of a Major Disaster Declaration

AGENCY: Federal Emergency Management Agency (FEMA).

ACTION: Notice.

SUMMARY: This notice amends the notice of a major disaster for the State of Minnesota, (FEMA–1175–DR), dated April 8, 1997, and related determinations.

EFFECTIVE DATE: August 5, 1997.

FOR FURTHER INFORMATION CONTACT: Madge Dale, Response and Recovery Directorate, Federal Emergency Management Agency, Washington, DC 20472, (202) 646–3260.

SUPPLEMENTARY INFORMATION: Notice is hereby given that in accordance with Public Law 105–33, Subtitle C, Section 9301 signed on August 5, 1997, the Federal share of the cost of assistance was amended to 90 percent Federal funding provided under the Robert T. Stafford Disaster Relief and Emergency Assistance Act (42 U.S.C. 5121 *et seq.*) as follows:

Kittson, Marshall, Polk, Norman, Clay, and Wilkin Counties for Categories C through G under the Public Assistance program (Categories A and B remain funded at 100 percent Federal funding).

(Catalog of Federal Domestic Assistance No. 83.516, Disaster Assistance)

Dennis H. Kwiatkowski,

Deputy Associate Director, Response and Recovery Directorate.

[FR Doc. 97–24404 Filed 9–12–97; 8:45 am]

BILLING CODE 6718–02–U

FEDERAL MARITIME COMMISSION

Notice of Agreement(s) Filed

The Commission hereby gives notice of the filing of the following agreement(s) under the Shipping Act of 1984.

Interested parties can review or obtain copies of agreements at the Washington, DC offices of the Commission, 800 North Capitol Street, N.W., Room 962. Interested parties may submit comments on an agreement to the Secretary, Federal Maritime Commission, Washington, DC 20573, within 10 days of the date this notice appears in the **Federal Register**.

Agreement No.: 203–011588.

Title: APL/MOL/OOCL/HMM Reciprocal Slot Exchange Agreement.

Parties: The Global Alliance parties: American President Lines, Ltd., Orient Overseas Container Line, Inc., Mitsui O.S.K. Lines, Ltd.; Hyundai Merchant Marine Co., Ltd. (''HMM'').

Synopsis: The proposed Agreement authorizes the parties to agree upon the reciprocal use of up to an annualized average of 500 TEUs of space per week by HMM on vessels operated by the Global Alliance parties and for the use of an equal amount of space by the Global Alliance parties on HMM vessels operating in the trade between the Pacific Coast of the United States and the Far East. The parties have requested shortened review.

By Order of the Federal Maritime Commission.

Dated: September 9, 1997.

Joseph C. Polking,

Secretary.

[FR Doc. 97–24271 Filed 9–12–97; 8:45 am]

BILLING CODE 6730–01–M

FEDERAL MARITIME COMMISSION

Privacy Act of 1974; Proposed Atlered Systems of Records

AGENCY: Federal Maritime Commission.

ACTION: Notice of proposed altered systems of records.

SUMMARY: This Notice proposes the amendment of various Privacy Act systems of records maintained by the Commission. The amendments are minor in nature and reflect changes in various system locations and record custodians resulting from Commission organizational changes, and update record retention information, and clarify certain descriptions of records maintained.

DATES: Comments must be submitted on or before October 15, 1997. The alterations will be effective on October 27, 1997, unless comments are received that would result in a contrary determination.

ADDRESSES: Comments may be submitted to: Joseph C. Polking, Secretary, Federal Maritime Commission, 800 N. Capitol Street, NW, Washington, DC 20573–0001, (202) 523–5725.

FOR FURTHER INFORMATION CONTACT: Joseph C. Polking, (202) 523–5725.

SUPPLEMENTARY INFORMATION: Notice is given that, pursuant to the Privacy Act of 1974, 5 U.S.C. 552a, the Commission proposes to amend various systems of records as described herein. The Commission's latest prior publication updating its systems of records was on February 11, 1994 (59 FR 6643).

Amendments proposed herein reflect minor changes in various system locations and record custodians resulting from Commission organizational changes, update record retention information, and clarify certain descriptions of records maintained.

1. In the Commission's system of records designated FMC–1 Personnel Security File the ''System location'' and ''Safeguards'' provisions are revised to read as follows:

FMC–1

* * * * *

SYSTEM LOCATION:

Bureau of Administration, Federal Maritime Commission, 800 N. Capitol Street, NW, Washington, DC 20573–0001

* * * * *

SAFEGUARDS:

Records are maintained in a combination safe in the custody of the information security officer and access is limited to the information security officer and the personnel security officer, and his/her duly authorized representatives.

2. In the Commission's system of records designated FMC–2 Non-Attorney Practitioner File, the

''Categories of records in the system'' provision is revised to read as follows:

FMC–2

* * * * *

CATEGORIES OF RECORDS IN THE SYSTEM:

Application forms containing descriptions of educational and professional experience and qualifications, taxpayer identification numbers (which may be the social security number), and letters of reference in relation to non-attorney practitioners.

* * * * *

3. In the Commission's system of records designated FMC–7 Licensed Ocean Freight Forwarders File, the ''Categories of records in the system'' provision is revised to read as follows:

FMC–7

* * * * *

CATEGORIES OF RECORDS IN THE SYSTEM:

The System contains freight forwarder names, addresses and taxpayer identification numbers (which may be the social security number), as well as the names and addresses of the stockholders, officers, and directors of individual freight forwarders; descriptions of the relationships the freight forwarder may have with other business entities; credit references; a record of the forwarder's past experience in forwarding; and any financial information and/or criminal convictions pertinent to the licensing of the forwarder.

4. In the Commission's system of records designated FMC–9 Training Program Records—FMC, the ''System location'' provision is revised to read as follows:

FMC–9

* * * * *

SYSTEM LOCATION:

Bureau of Administration, Federal Maritime Commission, 800 N. Capitol Street, NW, Washington, DC 20573–0001.

5. In the Commission's system of records designated FMC–18 Travel Orders/Vouchers File—FMC, the reference in the ''Routine Use'' provision to ''Federal Home Loan Bank Board'' is amended to read ''Office of Thrift Supervision,'' and in the ''Retention and Disposal'' provision the reference to ''three years'' is amended to read ''six years.''

6. In the Commission's system of records designated FMC–19 Statement of Employment and Financial Interests—FMC, the ''System name'' and the ''Note'' provisions are revised to read as follows:

FMC–19

SYSTEM NAME:

Financial Disclosure Reports and Other Ethics Program Records.

* * * * *

Note: This system is covered by the Office of Government Ethics' government-wide systems notices OGE/GOVT–1 and OGE/GOVT–2.

7. In the Commission's systems of records designated FMC–22 Investigatory Files-FMC, the ''System location'' provision is revised to read as follows:

FMC–22

SYSTEM LOCATION:

Bureau of Enforcement, Federal Maritime Commission, 800 N. Capitol Street, NW, Washington, DC 20573–0001.

8. In the Commission's system of records designated FMC–25 Inspector General File, in the ''Retention and Disposal'' provision the reference to ''five years'' is amended to read ''ten years,'' and the reference to ''ten years'' is amended to read ''fifteen years.''

9. In the Commission's system of records designated FMC–28 Equal Employment Opportunity Complaint Files—FMC, the ''System location'' provision is revised to read as follows:

FMC–28

* * * * *

SYSTEM LOCATION:

Office of General Counsel, Federal Maritime Commission, 800 N. Capitol Street, NW, Washington, DC 20573–0001

10. In the Commission's system of records designated FMC–30 Procurement Integrity, Certification Files, the ''Categories of records in the system,'' ''Authority for Maintenance of the system'' and the ''Retention and disposal'' provisions are revised to read as follows:

FMC–30

* * * * *

CATEGORIES OF RECORDS IN THE SYSTEM:

Records include certifications by individuals affected by the Office of Federal Procurement Policy Act Amendments of 1988, specifically section 27 dealing with Procurement Integrity; the non-disclosure provisions of the Federal Acquisition Regulations, and the contract for development of the Commission's Automated Tariff Filing and Information (ATFI) system. The certificants attest they will not engage in activities prohibited by applicable statutes, regulations, and contracts. Records include information on individuals, including name and title. This system does not include official personnel files covered by the Office of Personnel Management's systems of records OPM/GOVT–1 through 10.

AUTHORITY FOR MAINTENANCE OF THE SYSTEM:

Office of Federal Procurement Policy Act Amendments of 1988 (Pub. L. 100–679), (41 U.S.C. 423); and the Federal Acquisition Regulations.

* * * * *

RETENTION AND DISPOSAL:

Records are maintained until 6 months after the date on which the contracting officer received evidence of physical completion of the contract, after which they are shredded. See Federal Acquisition Regulations § 4.804–1(2) and General Records Schedule 3, item 3(c).

Interested parties may participate by filing with the Secretary, Federal Maritime Commission, an original and 15 copies of their views and comments pertaining to this notice. All suggestions for changes in the text should be accompanied by drafts of the language thought necessary to accomplish the desired changes and should be accompanied by supportive statements and arguments.

By the Commission.

Joseph C. Polking,

Secretary.

[FR Doc. 97–24432 Filed 9–12–97; 8:45 am]

BILLING CODE 6730–01–W

FEDERAL MARITIME COMMISSION

Privacy Act of 1974; Proposed New System of Records

AGENCY: Federal Maritime Commission.

ACTION: Notice of proposed new system of records.

SUMMARY: This Notice proposes the addition of a new system of records to be maintained by the Commission. The new system will contain information regarding the Commission's efforts to collect debts from individuals arising out of administrative or program activities or services administered by the Commission.

DATES: Comments must be submitted on or before October 15, 1997. The new system will be effective on October 27, 1997, unless comments are received that would result in a contrary determination.

ADDRESSES: Comments may be submitted to: Joseph C. Polking, Secretary, Federal Maritime Commission, 800 N. Capitol Street, NW, Washington, DC 20573–0001, (202) 523–5725.

FOR FURTHER INFORMATION CONTACT: Joseph C. Polking, (202) 523–5725.

SUPPLEMENTARY INFORMATION: The Commission is proposing to establish a new Privacy Act system of records related to debt collection activity it will be engaged in when implementing the Debt Collection Act of 1982, as amended by the Debt Collection Improvement Act of 1996 (''Act''), 31 U.S.C. 3701 et seq. Utilization by the Commission of the collection tools provided by the Act will help maximize collection of delinquent debts owed to the Government.

Notice is hereby given that, pursuant to the Privacy Act of 1974, 5 U.S.C. 552a, the Commission proposes to establish a new system of records reading as follows:

FMC—31

SYSTEM NAME:

Debt Collection Files.

SECURITY CLASSIFICATION:

Unclassified.

SYSTEM LOCATION:

Records are located in the Office of Budget and Financial Management, Federal Maritime Commission, 800 North Capitol Street, NW, Washington, DC 20573.

CATEGORIES OF INDIVIDUALS COVERED BY THE SYSTEM:

Individuals who are indebted to FMC.

CATEGORIES OF RECORDS IN THE SYSTEM:

The Debt Collection Officer's file will contain copies of debt collection letters, bills for collection, and correspondence to and from the debtor relating to the debt. The file will include such information as the name and address of the debtor, taxpayer's identification number (which may be the social security number); amount of debt or delinquent amount; basis of debt; date debt arose; office/bureau referring debt to the Debt Collection Officer; record of each collection made; credit report; financial statement reflecting the net worth of the debtor; date by which debt must be referred to the Department of the Treasury for further collection action; and citation or basis on which debt was terminated or compromised.

AUTHORITY FOR MAINTENANCE OF THE SYSTEM:

31 U.S.C. 3701 et seq., Debt Collection Act of 1982 (Pub. L. 97–365, 96 Stat. 1749) as amended by the Debt Collection Improvement Act of 1996 (Pub. L. 104–134, 101 Stat. 1321–358).

PURPOSE(S):

Information is used for the purpose of collecting monies owed FMC arising out of any administrative or program activities or services administered by FMC. The Debt Collection Officer's file represents the basis for the debt and amount of debt and actions taken by FMC to collect the monies owed under the debt. The credit report or financial statement provides an understanding of the individual's financial condition with respect to requests for deferment of payment.

ROUTINE USES OF RECORDS MAINTAINED IN THE SYSTEM, INCLUDING CATEGORIES OF USERS AND THE PURPOSES OF SUCH USES:

When debts are uncollectible, copies of the FMC Debt Collection Officer's file regarding the debt and actions taken to attempt to collect the monies are forwarded to the Department of Treasury for further collection action. FMC may also provide Treasury with copies of the debt collection letter, bill for collection, and FMC correspondence to the debtor.

DISCLOSURE TO CONSUMER REPORTING AGENCIES:

Disclosure pursuant to 5 U.S.C. 552a(b)(12): Disclosures may be made from this system to ''consumer reporting agencies'' as defined in the Fair Credit Reporting Act (15 U.S.C. 1681a(f) or the Federal Claims Collection Act of 1966 (31 U.S.C. 3701(a)(3)).

POLICIES AND PRACTICES FOR STORING, RETRIEVING, ACCESSING, RETARINING, AND DISPOSING OF RECORDS IN THE SYSTEM:

STORAGE:

Records are maintained in notebooks, file folders, on lists and forms, and in computer processible storage media.

RETRIEVABILITY:

The system files are filed by bill for collection number, name, or taxpayer's identification number (which may be the social security number).

SAFEGUARDS:

Personnel screening, hardware, and software computer security measures; paper records are maintained in locked containers and/or room. All records are maintained in areas that are secured by building guards during non-business hours. Records are retained in areas accessible only to authorized personnel.

RETENTION AND DISPOSAL:

Records are covered by General Records Schedule 6. The file on each debt on which administrative collection action has been completed shall be retained by Debt Collection Officer not less than one year after the applicable statute of limitation has run out. The file is then transferred to the National Archives and Records Administration for a period of six years and three months after the end of the fiscal year in which the debt was closed out by means of the debt being paid, terminated, compromised, or the statute of limitations had run out.

SYSTEM MANAGER(S) AND ADDRESS:

Director, Office of Budget and Financial Management, Federal Maritime Commission, 800 North Capitol Street, NW, Washington, DC 20573.

NOTIFICATION PROCEDURES:

Individuals wishing to inquire whether this system of records contains information about themselves should contact the system manager identified above. Written requests should be clearly marked ''Privacy Act Request'' on the envelope and letter. Requests should include full name of the individual, some type of appropriate personal identification, and current address.

For personal visits, the individuals should be able to provide some acceptable identification—that is, driver's license, employing organization identification card, or other picture identification card.

RECORD ACCESS PROCEDURES:

Same as Notification procedures above.

CONTESTING RECORD PROCEDURES:

Same as Notification procedures above. The letter should state clearly and concisely what information is being contested, the reason for contesting it, and the proposed amendment to the information sought.

FMC Privacy Act Regulations are promulgated in 46 CFR part 503.

RECORD SOURCE CATEGORIES:

Directly from the debtor, the initial application, credit report from the commercial credit bureau, administrative or program offices within FMC.

By the Commission.

Joseph C. Polking,

Secretary.

[FR Doc. 97–24433 Filed 9–12–97; 8:45 am]

BILLING CODE 6730–01–W

DEPARTMENT OF HEALTH AND HUMAN SERVICES

National Toxicology Program

Notice of Establishment

Pursuant to the Federal Advisory Committee Act, as amended (5 U.S.C. Appendix 2), the Director, National Toxicology Program (NTP), announces the establishment of the Advisory Committee on Alternative Toxicological Methods by the Secretary, DHHS.

The Committee will advise the NIEHS Interagency Center for the Evaluation of Alternative Toxicological Methods and the Director of the Environmental Toxicology Program on the activities and directives both present and future, as they relate to the Center, including advice on fostering interactions with all stakeholders.

Duration of this Committee is continuing unless formally determined by the Secretary, DHHS, that termination would be in the best public interest.

Dated: September 4, 1997.

Kenneth Olden,

Director, National Toxicology Program.

[FR Doc. 97–24273 Filed 9–12–97; 8:45 am]

BILLING CODE 4140–01–M

DEPARTMENT OF HEALTH AND HUMAN SERVICES

Agency for Toxic Substances and Disease Registry

[ATSDR–122]

Quarterly Public Health Assessments Completed

AGENCY: Agency for Toxic Substances and Disease Registry (ATSDR), Department of Health and Human Services (HHS).

ACTION: Notice.

SUMMARY: This notice is a quarterly announcement of sites for which ATSDR has completed public health assessments during the period April–June 1997. This list includes sites that are on or proposed for inclusion on the National Priorities List (NPL), and a site for which an assessment was prepared in response to a request from the public.

FOR FURTHER INFORMATION CONTACT: Robert C. Williams, P.E., DEE, Director, Division of Health Assessment and Consultation, Agency for Toxic Substances and Disease Registry, 1600 Clifton Road, NE., Mailstop E–32, Atlanta, Georgia 30333, telephone (404) 639–0610.

SUPPLEMENTARY INFORMATION: The most recent list of completed public health assessments was published in the **Federal Register** on June 10, l997, [62 FR 31603]. The quarterly announcement is the responsibility of ATSDR under the regulation, Public Health Assessments and Health Effects Studies of Hazardous Substances Releases and Facilities [42 CFR Part 90]. This rule sets forth ATSDR's procedures for the conduct of public health assessments under section 104(i) of the Comprehensive Environmental Response, Compensation, and Liability Act (CERCLA), as amended by the Superfund Amendments and Reauthorization Act (SARA) [42 U.S.C. 9604(i)].

Availability—The completed public health assessments and addendum are available for public inspection at the Division of Health Assessment and Consultation, Agency for Toxic Substances and Disease Registry, Building 33, Executive Park Drive, Atlanta, Georgia (not a mailing address), between 8 a.m. and 4:30 p.m., Monday through Friday except legal holidays. The completed public health assessments are also available by mail through the U.S. Department of Commerce, National Technical Information Service (NTIS), 5285 Port Royal Road, Springfield, Virginia 22161, or by telephone at (703) 487–4650. NTIS charges for copies of public health assessments and addenda. The NTIS order numbers are listed in parentheses following the site names.

Public Health Assessments Completed or Issued

Between April 1, 1997 and June 1, 1997, public health assessments were issued for the sites listed below:

NPL Sites

Idaho
- Triumph Mine Tailings Piles—Hailey—(PB97–171722)

Illinois
- Dupage County Landfill (Blackwell Forest Preserve)—Warrenville—(PB97–162598)
- Woodstock Municipal Landfill—Woodstock—(PB97–161459)

Missouri
- Weldon Spring Quarry/Plant/Pits (USDOE)—St. Charles—(PB97–180509)

New York
- Pollution Abatement Services—Oswego—(PB97–171748)

Ohio
- Miami County Incinerator—Troy—(PB97–157770)

Oklahoma
- Kerr-McGee Corporate Cushing Refinery—Cushing—(PB97–155204)

Pennsylvania
- Breslube-Penn Incorporated—Coraopolis—(PB97–164891)
- USA Tobyhanna Army Depot—Coolbaugh Township—(PB97–161491)

Tennessee
- ICG Iselin Railroad Yard—Jackson—(PB97–159511)

Non NPL Petition Site

Connecticut
- Connecticut Correctional Institution (a/k/a Somers Correctional Facility)—Somers—(PB97–155212)

Dated: September 9, 1997.

Georgi Jones,

Director, Office of Policy and External Affairs Agency for Toxic Substances and Disease Registry.

[FR Doc. 97–24336 Filed 9–12–97; 8:45 am]

BILLING CODE 4163–70–P

DEPARTMENT OF HEALTH AND HUMAN SERVICES

Centers for Disease Control and Prevention

Disease, Disability, and Injury Prevention and Control Special Emphasis Panel (SEP): Cooperative Agreements to Conduct Research on the Diagnosis and Pathogenesis of Lyme Disease in the United States, Program Announcement 800: Meeting

In accordance with section 10(a)(2) of the Federal Advisory Committee Act (Pub. L. 92–463), the Centers for Disease Control and Prevention (CDC) announces the following committee meeting.

Name: Disease, Disability, and Injury Prevention and Control SEP: Cooperative Agreements to Conduct Research on the Diagnosis and Pathogenesis of Lyme Disease in the United States, Program Announcement 800.

Time and Dates: 8:30 a.m.–4:30 p.m., October 6–7, 1997.

Place: Holiday Inn Conference Center, 130 Clairemont Avenue, Decatur, Georgia 30030.

Status: Open: 8:30 a.m.–9:15 a.m., October 6, 1997. Closed: 9:15 a.m. October 6, 1997, through 4:30 p.m. October 7, 1997.

Matters to be Discussed: The meeting will include the review, discussion, and evaluation of applications received in response to Program Announcement 800.

Portions of this meeting will be closed to the public in accordance with provisions set forth in section 552b(c) (4) and (6), Title 5 U.S.C., and the Determination of the Associate Director for Management and Operations, CDC, pursuant to Pub. L. 92–463.

Contact Person For More Information: Edwarda Lee, M.P.A., Division of Vector-Borne Infectious Diseases, National Center

for Infectious Diseases, CDC, M/S P02/MLR, P.O. Box 2087 (Foothills Campus), Fort Collins, Colorado 80522, telephone 970/221–6415.

Dated: September 8, 1997.

Carolyn J. Russell,

Director, Management Analysis and Services Office Centers for Disease Control and Prevention (CDC).

[FR Doc. 97–24335 Filed 9–12–97; 8:45 am]

BILLING CODE 4163–18–P

DEPARTMENT OF HEALTH AND HUMAN SERVICES

Administration for Children and Families

Submission for OMB Review; Comment Request

Title: Child Care Quarterly Case Record Report; Republication, In **Federal Register** Document 97–23469 (Volume 62, Number 171), Page 46743 the word ''Disaggregate'' replaces the word ''Desegregate'' and ''Respondents: States and Territories'' replaces ''Respondents: State, Local or Tribal Govt.'' For the convenience of the reader, the document is being republished in its entirety.

OMB No.: New Request.

Description: This legislatively-mandated report collects program and participants data on children receiving direct CCDF funds. Disaggregate data will be collected and will be used to determine the participants and program characteristics, as well as cost and level of child care services. The data will be used to provide a report to Congress.

Respondents: States and Territories.

ANNUAL BURDEN ESTIMATES

Instrument	Number of respondents	Number of responses per respondent	Average burden hours per response	Total burden hours
ACF–801	56	4	20	4,360

Estimated Total Annual Burden Hours: 4,360.

Additional Information: Copies of the proposed collection may be obtained by writing to The Administration for Children and Families, Office of Information Services, Division of Information Resource Management Services, 370 L'Enfant Promenade, S.W., Washington, D.C. 20447, Attn: ACF Reports Clearance Officer.

OMB Comment: OMB is required to make a decision concerning the collection of information between 30 and 60 days after publication of this document in the **Federal Register.** Therefore, a comment is best assured of having its full effect if OMB receives it within 30 days of publication. Written comments and recommendations for the proposed information collection should be sent directly to the following: Office of Management and Budget, Paperwork Reduction Project, 725 17th Street, N.W., Washington, D.C. 20503, Attn: Ms. Laura Oliven.

Dated: September 9, 1997.

Bob Sargis,

Acting Reports Clearance Officer.

[FR Doc. 97–24280 Filed 9–12–97; 8:45 am]

BILLING CODE 4184–01–M

DEPARTMENT OF HEALTH AND HUMAN SERVICES

Food and Drug Administration

[Docket No. 97N–0022]

Agency Information Collection Activities Submission for OMB Review; Comment Request

AGENCY: Food and Drug Administration, HHS.

ACTION: Notice.

SUMMARY: The Food and Drug Administration (FDA) is announcing that the proposed collection of information listed below has been submitted to the Office of Management and Budget (OMB) for review and clearance under the Paperwork Reduction Act of 1995 (the PRA).

DATES: Submit written comments on the collection of information by October 15, 1997.

ADDRESSES: Submit written comments on the collection of information to the Office of Information and Regulatory Affairs, OMB, New Executive Office Bldg., 725 17th St. NW., rm. 10235, Washington, DC 20503, Attention: Desk Officer for FDA.

FOR FURTHER INFORMATION CONTACT: Judith V. Bigelow, Office of Information Resources Management (HFA–250), Food and Drug Administration, 5600 Fishers Lane, Rockville, MD 20857, 301–827–1479.

SUPPLEMENTARY INFORMATION: In compliance with section 3507 of the PRA (44 U.S.C. 3507), FDA has submitted the following proposed collection of information to OMB for review and clearance.

Hearing Aid Devices: Professional and Patient Package Labeling and Conditions for Sale—21 CFR 801.420 and 801.421 (OMB Control No. 0910–0171—Reinstatement)

Under section 520(e) of the Federal Food, Drug, and Cosmetic Act (the act) (21 U.S.C. 360j(e)), the Secretary of the Department of Health and Human Services (the Secretary) may, under certain conditions, require by regulation that a device be restricted to sale, distribution, or use only upon authorization of a licensed practitioner or upon other prescribed conditions. Sections 801.420 and 801.421 (21 CFR 801.420 and 801.421) implement this authority for hearing aids, which are restricted devices. The regulations require that the manufacturer or distributor provide to the user data useful in selecting, fitting, and checking the performance of a hearing aid through distribution of a User Instructional Brochure. The User Instructional Brochure must also contain technical data about the device, instructions for its use, maintenance and care, a warning statement, a notice about the medical evaluation requirement, and a statement if the aid is rebuilt or used.

Hearing aid dispensers are required to provide the prospective user, before the sale of a hearing aid, with a copy of the User Instructional Brochure for the hearing aid model that has been, or may be, selected for the prospective user and to review the contents of the brochure with the buyer. In addition, upon

request by an individual who is considering the purchase of a hearing aid, the dispenser is required to provide a copy of the User Instructional Brochure for that model hearing aid or the name and address or telephone number of the manufacturer or distributor from whom a User Instructional Brochure for the hearing aid may be obtained. Under conditions of sale of hearing aid devices, manufacturers or distributors shall provide sufficient copies of the User Instructional Brochure to sellers for distribution to users and prospective users and provide a copy of the User Instructional Brochure to any health care professional, user, or prospective user who requests a copy in writing. The regulations also require that the patient provide a written statement that he or she has undergone a medical evaluation within the previous 6 months before the hearing aid is dispensed, although informed adults may waive the medical evaluation requirement by signing a written statement. Finally, the regulation requires that the dispenser retain for 3 years copies of all physician statements or any waivers of medical evaluations.

The information obtained through this collection of information is used by FDA to ensure that hearing aids are sold and used in a way consistent with the public health.

The information contained in the User Instructional Brochure is intended not only for the hearing aid user but also for the physician, audiologist, and dispenser. The data is used by these health care professionals to evaluate the suitability of a hearing aid, to permit proper fitting of it, and to facilitate repairs. The data also permits the comparison of the performance characteristics of various hearing aids. Noncompliance could result in a substantial risk to the hearing impaired because the physician, audiologist, or dispenser would not have sufficient data to match the aid to the needs of the user.

The respondents to this collection of information are hearing aid manufacturers, distributors, dispensers, health professionals, or other for profit organizations.

In 1993, FDA conducted an audit of hearing aid dispensers in four FDA districts to determine the level of compliance with existing hearing aid requirements. The estimates relating to § 801.421(a)(1) and (a)(2) in the reporting and recordkeeping burden tables below are based on information obtained in this audit. This audit revealed that medical evaluations were obtained in 32 percent of the sales and signed waivers were obtained in 60 percent of the sales.

FDA estimates the burden of this collection of information as follows:

TABLE 1.—ESTIMATED ANNUAL REPORTING BURDEN

21 CFR Section	No. of Respondents	Annual Frequency per Respondents	Total Annual Responses	Hours per Response	Total Hours
801.420	40	5	200	40	8,000
801.421(a)(1)	9,900	52	514,800	0.10	51,480
801.421(a)(2)	19,900	97	960,300	0.30	288,090
801.421(b)	9,900	162	1,600,000	0.30	480,000
801.421(c)	9,940	5	49,700	0.17	8,449
Total Burden Hours					836,019

There are no capital costs or operating and maintenance costs associated with this collection of information.

TABLE 2.—ESTIMATED ANNUAL RECORDKEEPING BURDEN

21 CFR Section	No. of Recordkeepers	Annual Frequency per Recordkeeping	Total Annual Records	Hours per Recordkeeper	Total Hours
801.421(d)	9,900	162	1,600,000	0.25	400,000
Total					400,000

There are no capital costs or operating and maintenance costs associated with this collection of information.

Dated: September 8, 1997.

William K. Hubbard,

Associate Commissioner for Policy Coordination.

[FR Doc. 97–24348 Filed 9–12–97; 8:45 am]

BILLING CODE 4160–01–F

DEPARTMENT OF HEALTH AND HUMAN SERVICES

Health Care Financing Administration

[MB–110–N]

RIN: 0938–AH93

Medicaid Program; Final Limitations on Aggregate Payments to Disproportionate Share Hospitals: Federal Fiscal Year 1997

AGENCY: Health Care Financing Administration (HCFA), HHS.

ACTION: Notice.

SUMMARY: This notice announces the final Federal fiscal year (FFY) 1997 national target and individual State allotments for Medicaid payment adjustments made to hospitals that serve a disproportionate number of Medicaid recipients and low-income patients with special needs. We are publishing this notice in accordance with the provisions of section 1923(f)(1)(C) of the Social Security Act and implementing regulations at 42 CFR 447.297 through 447.299. The final FFY 1997 State disproportionate share hospital (DSH) allotments published in this notice supersede the preliminary FFY 1997 DSH allotments that were published in the **Federal Register** on January 31, 1997.

EFFECTIVE DATE: The final DSH payment adjustment expenditure limits included

in this notice apply to Medicaid DSH payment adjustments for FFY 1997.

FOR FURTHER INFORMATION CONTACT: Richard Strauss, (410) 786–2019

SUPPLEMENTARY INFORMATION:

I. Background

Section 1902(a)(13)(A) of the Social Security Act (the Act) requires States to ensure that their Medicaid payment rates include payment adjustments for Medicaid-participating hospitals that serve a large number of Medicaid recipients and other low-income individuals with special needs (referred to as disproportionate share hospitals). The DSH payment adjustments are calculated on the basis of formulas specified in section 1923 of the Act.

Section 1923(f) of the Act and implementing Medicaid regulations at 42 CFR 447.297 through 447.299 require us to estimate and publish in the **Federal Register** a national aggregate target and each State's allotment for DSH payments for each Federal fiscal year (FFY). The implementing regulations provide that the national DSH payment limit for a FFY specified in the Act is a target rather than an absolute cap when determining the amount that can be allocated for DSH payments. The national DSH payment target is 12 percent of the total amount of medical assistance expenditures (excluding total administrative costs) that are projected to be made under approved Medicaid State plans during the FFY.

(**Note:** Whenever the phrases ''total medical assistance expenditures'' or ''total administrative costs'' are used in this notice, they mean both the State and Federal share of expenditures or costs.)

In addition to the national DSH payment target, there is a specific State DSH payment limit for each State for each FFY. The State DSH payment limit is a specified amount of DSH payment adjustments applicable to a FFY above which FFP will not be available. This is called the ''State DSH allotment.''

Each State's DSH allotment for FFY 1997 is calculated by first determining whether the State is a ''high-DSH State'' or a ''low-DSH State.'' This is determined by using the State's ''base allotment.'' A State's base allotment is the greater of the following amounts: (1) The total amount of the State's actual and projected DSH payment adjustments made under the State's approved State plan applicable to FFY 1992, as adjusted by HCFA; or (2) $1,000,000.

A State whose base allotment exceeds 12 percent of the State's total medical assistance expenditures (excluding administrative costs) projected to be made in FFY 1997 is referred to as a ''high-DSH State'' for FFY 1997. The FFY 1997 State DSH allotment for a high-DSH State is limited to the State's base allotment.

A State whose base allotment is equal to or less than 12 percent of the State's total medical assistance expenditures (excluding administrative costs) projected to be made in FFY 1997 is referred to as a ''low-DSH State.'' The FFY 1997 State DSH allotment for a low-DSH State is equal to the State's DSH allotment for FFY 1996 increased by growth amounts and supplemental amounts, if any. However, the FFY 1997 DSH allotment for a low-DSH State cannot exceed 12 percent of the State's total medical assistance expenditures for FFY 1997 (excluding administrative costs).

The growth amount for FFY 1997 is equal to the projected percentage increase (the growth factor) in a low-DSH State's total Medicaid program expenditures between FFY 1996 and FFY 1997 multiplied by the State's final DSH allotment for FFY 1996. Because the national DSH payment limit is considered a target, low-DSH States whose programs grow from one year to the next can receive a growth amount that would not be permitted if the national DSH payment limit was viewed as an absolute cap.

There is no growth factor and no growth amount for any low-DSH State whose Medicaid program does not grow (that is, stayed the same or declined) between FFY 1996 and FFY 1997. Furthermore, because a low-DSH State's FFY 1997 DSH allotment cannot exceed 12 percent of the State's total medical assistance expenditures for FFY 1997, it is possible for its FFY 1997 DSH allotment to be lower than its FFY 1996 DSH allotment. This occurs when the State's prior FFY DSH allotment is greater than 12 percent of the total projected medical assistance expenditures for the current FFY. For FFY 1997, this is the case for the States of California and Hawaii. For the State of California, even though the State projected Medicaid program growth from FFY 1996 to FFY 1997, its FFY 1996 DSH allotment was greater than its FFY 1997 12 percent limit. For the State of Hawaii, the State projected a decrease in its FFY 1997 medical assistance expenditures such that its FFY 1997 12 percent limit was lower than its FFY 1996 DSH allotment.

When we published the preliminary State DSH allotments for FFY 1997 in the **Federal Register** on January 31, 1997, for the first time since we began publishing the DSH allotments, there were State supplemental amounts available for redistribution to low-DSH States for FFY 1997. However, in the final FFY 1997 State DSH allotments published in this notice, there are no State supplemental amounts. This is due to changes in the States' estimated expenditures for FFY 1997, and from the use of the actual Medicaid expenditures for FFY 1996 in these final allotments from those used in determining the preliminary FFY 1997 State DSH allotments.

Under section 1923(f)(3) of the Act and implementing regulations at 42 CFR 447.298(e), the State supplemental amount, if any, is equal to a low-DSH State's relative share of a pool of funds (the redistribution pool). The redistribution pool is equal to the national 12-percent DSH payment target reduced by the sum of: the total of the base allotments for high-DSH States, the total of the State DSH allotments for the previous FFY for low-DSH States, and the total of the low-DSH State growth amounts. However, in determining the final FFY 1997 State DSH allotments published in this notice, the projected FFY 1997 national 12-percent DSH payment target is less than the sum of these amounts. Therefore, there is no redistribution pool and no supplemental amounts available for low-DSH States for FFY 1997.

In accordance with section 1923(f)(3) of the Act and 42 CFR 447.298(e), we determine each low-DSH State's supplemental amount by determining the State's relative share of the national redistribution pool, if available, on the basis of the State's total medical assistance expenditures for FFY 1997 compared to the sum of the medical assistance expenditures for the year for all low-DSH States. However, we will not provide any low-DSH State with a supplemental amount that would result in the State's total DSH allotment exceeding 12 percent of the State's projected medical assistance expenditures. Any supplemental amounts that cannot be allocated to a low-DSH State because of this limitation will be reallocated to other low-DSH States whose allotment does not exceed this 12-percent limit.

As prescribed in the law and regulations, no State's DSH allotment will be below a minimum of $1,000,000.

As an exception to the above requirements, under section 1923(f)(1)(A)(i)(II) of the Act and regulations at 42 CFR 447.296(b)(5) and 447.298(f), a State may make DSH payments for a FFY in accordance with the minimum payment adjustments required by Medicare methodology described in section 1923(c)(1) of the

Act. The final FFY 1997 State DSH allotments for the District of Columbia, Iowa, and Nebraska have been determined in accordance with this exception.

We are publishing in this notice the final FFY 1997 national DSH payment target and State DSH allotments based on the best available data we received to date from the States, as adjusted by HCFA. These data are taken from each State's actual Medicaid expenditures for FFY 1996 as reported on the States' quarterly expenditure report Form HCFA–64 submissions and the FFY 1997 projected Medicaid expenditures as reported on the February 15, 1997 Medicaid Budget Report (Form HCFA–37) submission. All data are adjusted as necessary.

II. Calculations of the Final FFY 1997 DSH Limits

The total of the final State DSH allotments for FFY 1997 is equal to the sum of: the base allotments for all high-DSH States, the FFY 1996 State DSH allotments for all low-DSH States (including any adjustments required because of the 12 percent limitation), the growth amounts for all low-DSH States, and the supplemental amounts for all low-DSH States. A State-by-State breakdown is presented in section III of this notice.

We classified States as high-DSH or low-DSH States. If a State's base allotment exceeded 12 percent of its total unadjusted medical assistance expenditures (excluding administrative costs) projected to be made under the State's approved plan under title XIX of the Act in FFY 1997, we classified that State as a ''high-DSH'' State. If a State's base allotment was 12 percent or less of its total unadjusted medical assistance expenditures projected to be made under the State's approved plan under title XIX of the Act in FFY 1997, we classified that State as a ''low-DSH'' State. Based on this classification, there are 37 low-DSH States and 13 high-DSH States for FFY 1997.

Using the most recent data from the States' February 1997 budget projections (Form HCFA–37), we estimate the States' FFY 1997 national total medical assistance expenditures to be $169,259,338,000. Thus, the overall final FFY 1997 national DSH payment target is $20,311,121,000 (12 percent of $169,259,338,000).

In the final FFY 1997 State DSH allotments, we provide a total of $873,722,000 ($461,188,000 Federal share) in growth amounts for 35 of the 37 low-DSH States. The FFY 1997 growth amounts for low-DSH States are determined by multiplying the low-DSH States' final FFY 1996 State DSH allotments by the growth factor percentage for those States. The growth factor percentage for each of the low-DSH States is determined by calculating the States' percentage change in Medicaid program expenditures (including administrative expenditures) between FFY 1996 and FFY 1997. To compute this percentage, we first ascertained each low-DSH State's total FFY 1996 actual medical assistance and administrative expenditures as reported on the State's four quarterly Medicaid expenditure reports (Form HCFA–64) for FFY 1996. Next, we compared those expenditures to each low-DSH State's total estimated unadjusted FFY 1997 medical assistance and administrative expenditures, as reported to HCFA on the State's February 15, 1997 Form HCFA–37 through the ''cutoff'' date of March 26, 1997. The cutoff date is the date through which the State's budget estimates reported on the February 15, 1997 Form HCFA–37 are accepted and applied in preparing the State's Medicaid grant award for the upcoming quarter (in this case, April through June 1997).

No final FFY 1997 redistribution pool is available, since the final FFY 1997 national DSH payment target of $20,311,121,000 is less than $20,335,510,000, representing the sum of: the total of the base allotments for high-DSH States ($7,375,265,000), the total of the State DSH allotments for the previous FFY for low-DSH States ($12,091,807,000), and the growth amounts for low DSH States ($873,722,000) and the negative adjustment for the States of California and Hawaii due to the 12 percent limitation requirement ($3,003,000 and $2,281,000, respectively). That is, this sum exceeds the national target by $24,390,000.

The supplemental amount for each low-DSH State is the low-DSH State's relative share of the redistribution pool, determined by allocating the redistribution pool on the basis of the low-DSH State's medical assistance expenditures compared to the national total medical assistance expenditures for low-DSH States.

A low-DSH State's growth amount and supplemental amounts, if any, are added to the low-DSH State's final FFY 1996 DSH allotment amount to establish the final total low-DSH State's DSH allotment for FFY 1997. If a low-DSH State's growth amount and supplemental amount (if any), when added to its final FFY 1996 DSH allotment amount, exceed 12 percent of its FFY 1997 estimated medical assistance expenditures, the State can only receive a partial growth amount that, when added to its final FFY 1996 allotment, limits its total State DSH allotment for FFY 1997 to 12 percent of its estimated FFY 1997 medical assistance expenditures. Eleven of the low-DSH States were affected by the 12 percent limitation requirement. Nine of these low-DSH States received partial growth amounts, and two low-DSH States' (California and Hawaii) final FFY 1997 State DSH allotment are lower than their final FFY 1996 State DSH allotments.

Also, in accordance with the minimum payment adjustments required by Medicare methodology, the final FFY 1997 State DSH allotments for the District of Columbia, Iowa, and Nebraska are $79,920,000, $16,910,000, and $13,366,000, respectively.

In summary, the total of all final State DSH allotments for FFY 1997 is $20,335,510,000 ($11,475,206,000 Federal share). This total is composed of the high-DSH States' base allotments ($7,375,265,000), the low-DSH States' prior FFY's final State DSH allotments ($12,091,807,000), and the growth amounts for all low-DSH States ($873,722,000), and the negative adjustment for the States of California and Hawaii due to the 12 percent limitation requirement ($3,003,000 and $2,281,000, respectively), plus supplemental amounts for low-DSH States ($0). The total of all final FFY 1997 State DSH allotments is 12.0 percent of the total medical assistance expenditures (excluding administrative costs) projected to be made by these States in FFY 1997.

Each State should monitor and make any necessary adjustments to its DSH spending during FFY 1997 to ensure that its actual FFY 1997 DSH payment adjustment expenditures do not exceed its State DSH allotment for FFY 1997 published in this notice. As the ongoing reconciliation between actual FFY 1997 DSH payment adjustment expenditures and the FFY 1997 DSH allotments takes place, each State should amend its plan as may be necessary to make any adjustments to its FFY 1997 DSH payment adjustment expenditure patterns so that the State will not exceed its FFY 1997 DSH allotment.

The FFY 1997 reconciliation of DSH allotments to actual expenditures will take place on an ongoing basis as States file expenditure reports with HCFA for DSH payment adjustment expenditures applicable to FFY 1997. Additional DSH payment adjustment expenditures made in succeeding FFYs that are applicable to FFY 1997 will continue to be reconciled with each State's FFY 1997 DSH allotment as additional

expenditure reports are submitted to ensure that the FFY 1997 DSH allotment is not exceeded. As a result, any DSH payment adjustment expenditures for FFY 1997 in excess of the FFY 1997 DSH allotment will be disallowed, and therefore, subject to the normal Medicaid disallowance procedures.

III. Final FFY 1997 DSH Allotments

Key to Chart:

Column	Description
Column A =	Name of State
Column B =	High or Low DSH State Designation for FFY 1997. ''High'' indicates the State is a high-DSH State and ''Low'' indicates the State is a low-DSH State.
Column C =	Final FFY 1996 DSH Allotments for All States. These were published in the **Federal Register** on September 23, 1996 (61 FR 49781).
Column D =	Base Allotments for High-DSH States. The base allotment is the greater of the high-DSH State's FFY 1992 allowable DSH payment adjustment expenditures applicable to FFY 1992, or $1,000,000. ''NA, LOW DSH'' entries in this column refer to low-DSH States.
Column E =	Growth Amounts for Low-DSH States. The growth amount is an increase in a low-DSH State's final FFY 1996 DSH allotment to the extent that the State's Medicaid program grew between FFY 1996 and FFY 1997. ''NA, HIGH DSH'' entries in this column refer to high-DSH States, which receive no growth. ''NONE, NO GROWTH'' entries in this column refer to low-DSH States whose Medicaid program had no increase or a decrease from FFY 1996 to FFY 1997.
Column F =	Supplemental Amounts for Low-DSH States. The supplemental amount is the low-DSH State's relative share of the national redistribution pool. ''NA, HIGH DSH'' entries in this column refer to high-DSH States, which do not receive supplemental amounts. ''NONE, LOW AT 12%'' entries in this column refer to low-DSH States which do not receive any supplemental amounts because their DSH allotments are already at the State specific 12 percent limit.
Column G =	Final FFY 1997 State DSH Allotments. For a high-DSH State, this is equal to the base allotment from column D. For a low-DSH State, this is equal to the final State DSH allotment for FFY 1996 from column C plus, if any, the growth amount from column E and the supplemental amount from column F.

BILLING CODE 4120–01–P

FINAL FEDERAL FISCAL YEAR
1997 DISPROPORTIONATE SHARE HOSPITAL
ALLOTMENTS UNDER PUBLIC LAW 102-234
AMOUNTS ARE STATE AND FEDERAL SHARES
DOLLARS ARE IN THOUSANDS (000)

A	B	C	D	E	F	G
STATE	FFY 1997 HIGH OR LOW DSH STATE DESIGNATION	FINAL FFY 1996 DSH ALLOTMENTS FOR ALL STATES	BASE ALLOTMENTS FOR HIGH DSH STATES	GROWTH AMOUNTS FOR LOW DSH STATES (1)	SUPPLEMENTAL POOL DISTRIBUTION FOR LOW DSH STATES	FINAL FFY 1997 STATE DSH ALLOTMENTS
AL	HIGH	$417,458	$417,458	NA, HIGH DSH	NA, HIGH DSH	$417,458
AK	LOW	$21,700	NA, LOW DSH	$4,249	$0	$25,948
AR	LOW	$3,605	NA, LOW DSH	$155	$0	$3,760
CA	LOW	$2,191,451	NA, LOW DSH	NONE, NO GROWTH	$0	$2,188,448
CO	HIGH	$302,014	$302,014	NA, HIGH DSH	NA, HIGH DSH	$302,014
CT	HIGH	$408,933	$408,933	NA, HIGH DSH	NA, HIGH DSH	$408,933
DE	LOW	$8,613	NA, LOW DSH	$258	$0	$8,871
DC (2)	LOW	$61,854	NA, LOW DSH	$18,065	$0	$79,920
FL	LOW	$340,018	NA, LOW DSH	$25,775	$0	$365,793
GA	LOW	$426,717	NA, LOW DSH	$253	$0	$426,970
HI	LOW	$82,686	NA, LOW DSH	NONE, NO GROWTH	$0	$80,405
ID	LOW	$2,382	NA, LOW DSH	$169	$0	$2,552
IL	LOW	$542,225	NA, LOW DSH	$64,415	$0	$606,640
IN	LOW	$342,139	NA, LOW DSH	$13,707	$0	$355,845
IA (2)	LOW	$15,735	NA, LOW DSH	$1,175	$0	$16,910
KS	HIGH	$188,935	$188,935	NA, HIGH DSH	NA, HIGH DSH	$188,935
KY	LOW	$284,863	NA, LOW DSH	$24,360	$0	$309,223
LA	HIGH	$1,217,636	$1,217,636	NA, HIGH DSH	NA, HIGH DSH	$1,217,636
ME	HIGH	$165,317	$165,317	NA, HIGH DSH	NA, HIGH DSH	$165,317
MD	LOW	$150,952	NA, LOW DSH	$18,284	$0	$169,236
MA	LOW	$575,289	NA, LOW DSH	$21,762	$0	$597,051
MI	LOW	$686,478	NA, LOW DSH	$7,354	$0	$693,832
MN	LOW	$63,890	NA, LOW DSH	$6,927	$0	$70,817
MS	LOW	$200,912	NA, LOW DSH	$15,708	$0	$216,620
MO	HIGH	$731,894	$731,894	NA, HIGH DSH	NA, HIGH DSH	$731,894
MT	LOW	$1,417	NA, LOW DSH	$61	$0	$1,478
NE (2)	LOW	$12,031	NA, LOW DSH	$1,335	$0	$13,366
NV	HIGH	$73,560	$73,560	NA, HIGH DSH	NA, HIGH DSH	$73,560
NH	HIGH	$392,006	$392,006	NA, HIGH DSH	NA, HIGH DSH	$392,006
NJ	HIGH	$1,094,113	$1,094,113	NA, HIGH DSH	NA, HIGH DSH	$1,094,113
NM	LOW	$20,272	NA, LOW DSH	$2,535	$0	$22,807
NY	LOW	$3,047,528	NA, LOW DSH	$478,982	$0	$3,526,510
NC	LOW	$458,975	NA, LOW DSH	$27,533	$0	$486,508
ND	LOW	$1,262	NA, LOW DSH	$35	$0	$1,297
OH	LOW	$651,596	NA, LOW DSH	$30,797	$0	$682,393
OK	LOW	$25,021	NA, LOW DSH	$727	$0	$25,748
OR	LOW	$33,118	NA, LOW DSH	$1,601	$0	$34,718
PA	LOW	$967,407	NA, LOW DSH	$65,413	$0	$1,032,820
RI	LOW	$111,480	NA, LOW DSH	$2,934	$0	$114,414
SC	HIGH	$439,759	$439,759	NA, HIGH DSH	NA, HIGH DSH	$439,759
SD	LOW	$1,555	NA, LOW DSH	$56	$0	$1,612
TN	HIGH	$430,611	$430,611	NA, HIGH DSH	NA, HIGH DSH	$430,611
TX	HIGH	$1,513,029	$1,513,029	NA, HIGH DSH	NA, HIGH DSH	$1,513,029
UT	LOW	$6,307	NA, LOW DSH	$221	$0	$6,528
VT	LOW	$31,740	NA, LOW DSH	$2,230	$0	$33,970
VA	LOW	$222,005	NA, LOW DSH	$20,480	$0	$242,484
WA	LOW	$352,800	NA, LOW DSH	$11,533	$0	$364,333
WV	LOW	$132,415	NA, LOW DSH	$3,153	$0	$135,568
WI	LOW	$11,746	NA, LOW DSH	$1,197	$0	$12,943
WY	LOW	$1,623	NA, LOW DSH	$281	$0	$1,904
TOTAL		$19,467,072	$7,375,265	$873,722	$0	$20,335,510

NOTES:
(1) THERE ARE 2 LOW DSH STATES WITH FFY 1997 ALLOTMENTS LESS THAN THEIR FFY 1996 ALLOTMENTS DUE TO THE 12 PERCENT LIMIT AND 9 LOW DSH STATES WITH PARTIAL GROWTH UP TO 12 PERCENT OF FFY 97 MAP
(2) ALLOTMENT BASED UPON MINIMUM PAYMENT ADJUSTMENT AMOUNT

BILLING CODE 4120–01–C

IV. Regulatory Impact Statement

The Regulatory Flexibility Act, 5 U.S.C. 601 through 612, requires a regulatory flexibility analysis for every rule subject to proposed rulemaking procedures under the Administrative Procedure Act, 5 U.S.C. 552, unless we certify that the rule will not have a significant economic impact on a substantial number of small entities. For purposes of a RFA, States and individuals are not considered small entities. However, providers are considered small entities. Additionally, section 1102(b) of the Act requires us to prepare a regulatory impact analysis if a notice may have a significant impact on the operations of a substantial number of small rural hospitals. Such an analysis must conform to the provisions of section 604 of the RFA. For purposes of section 1102(b) of the Act, we define a small rural hospital as a hospital that is located outside of a Metropolitan Statistical Area and has fewer than 50 beds.

We do not believe that this notice will have a significant economic impact on a substantial number of small entities because it reflects no new policies or procedures, and should have an overall positive impact on payments to disproportionate share hospitals by informing States of the extent to which DSH payments may be increased without violating statutory limitations. This notice sets forth no changes in our regulations; rather, it reflects the DSH allotments for each State as determined in accordance with 42 CFR 447.297 through 447.299.

We have discussed the method of calculating the preliminary FFY 1997 national DSH payment target and the preliminary FFY 1997 individual State DSH allotments in the previous sections of this preamble. These calculations should have a positive impact on payments to disproportionate share hospitals. Allotments will not be reduced for high-DSH States since we interpret the 12-percent limit as a target. Low-DSH States' allotments are equal to their prior FFY DSH allotments plus their growth and supplemental amounts, if any.

In accordance with the provisions of Executive Order 12866, this notice was reviewed by the Office of Management and Budget.

(Catalog of Federal Assistance Program No. 93.778, Medical Assistance Program)

Dated: June 5, 1997.

Bruce C. Vladeck,

Administrator, Health Care Financing Administration.

Dated: July 24, 1997.

Donna E. Shalala,

Secretary.

[FR Doc. 97–24281 Filed 9–12–97; 8:45 am]

BILLING CODE 4120–01–P

DEPARTMENT OF HEALTH AND HUMAN SERVICES

Health Resources and Services Administration

Agency Information Collection Activities: Proposed Collection: Comment Request

In compliance with the requirement for opportunity for public comment on proposed data collection projects (section 3506(c)(2)(A) of Title 44, United States Code, as amended by the Paperwork Reduction Act of 1995, Public Law 104–13), the Health Resources and Services Administration (HRSA) will publish periodic summaries of proposed projects being developed for submission to OMB under the Paperwork Reduction Act of 1995. To request more information on the proposed project or to obtain a copy of the data collection plans, call the HRSA Reports Clearance Officer on (301) 443–1129.

Comments are invited on: (a) Whether the proposed collection of information is necessary for the proper performance of the functions of the agency, including whether the information shall have practical utility; (b) the accuracy of the agency's estimate of the burden of the proposed collection of information; (c) ways to enhance the quality, utility, and clarity of the information to be collected; and (d) ways to minimize the burden of the collection of information on respondents, including through the use of automated collection techniques or other forms of information technology.

Proposed Project: Uniform Data System (OMB No. 0915–0193)—Extension and Revision—This is a request for extension and revision of a reporting system, the Uniform Data System (UDS), that consolidated and replaced annual reporting requirements for the cluster of primary care grantees funded by the Bureau of Primary Health Care (BPHC), Health Resources and Services Administration (HRSA). The UDS includes reporting requirements for grantees of the following primary care programs: Community Health Centers, Migrant Health Centers, Health Care for the Homeless, Outreach and Primary Health Services for Homeless Children and Public Housing Primary Care. Authorizing Legislation is found in Public Law 104–299, Health Center Consolidation Act of 1996, enacting Section 330 of the Public Health Service Act.

The Bureau of Primary Health Care collects data on its programs to ensure compliance with legislative mandates and to report to Congress and policy makers on program accomplishments. To meet these objectives, BPHC requires a core set of information collected annually that is appropriate for monitoring and evaluating performance and reporting on annual trends. The UDS includes two components: the Universal Report, completed by all grantees, provides data on services, staffing, and financing; and the Grant Report, completed by grantees funded under the Homeless or Public Housing Program as well as one of the other programs, provides data on characteristics of users whose services fall within the scope of the Homeless or Public Housing Program grant. The first UDS reports were collected March 31, 1997 and analysis of data indicates that several revisions should be made. Program officials have noted that additional information needs to be collected which was included in previous reporting systems but was deleted from the UDS. Grantees will be asked to provide information on the charges, collections, bad debt write off and contractual disallowances by payor sources (Medicaid, Medicare, self pay and private insurance). Existing UDS forms are being reviewed to determine how the revenue/income reporting can be modified to accommodate these changes. Additional revisions will include annotating the forms to indicate which lines are subtotals and the lines to which they sum.

The proposed changes are not expected to add significantly to the reporting burden. Estimates of annualized reporting burden are as follows:

Type of report	Number of respondents	Hours per response	Total burden hours
Universal Report	694	24	16,656
Grant Report	88	16	1,408

Type of report	Number of respondents	Hours per response	Total burden hours
Total	694		18,064

Send comments to Patricia Royston, HRSA Reports Clearance Officer, Room 14–36, Parklawn Building, 5600 Fishers Lane, Rockville, MD 20857. Written comments should be received within 60 days of this Notice.

Dated: September 5, 1997.

Jane Harrison,

Acting Director, Division of Policy Review and Coordination.

[FR Doc. 97–24347 Filed 9–12–97; 8:45 am]

BILLING CODE 4160–15–P

DEPARTMENT OF HEALTH AND HUMAN SERVICES

National Institutes of Health

Consensus Development Conference on Acupuncture

Notice is hereby given of the NIH Consensus Development Conference on ''Acupuncture,'' which will be held November 3–5, 1997, in the Natcher Conference Center of the National Institutes of Health, 9000 Rockville Pike, Bethesda, Maryland 20892. The conference begins at 8:30 a.m. on November 3, at 8 a.m. on November 4, and at 9 a.m. on November 5.

Acupuncture and moxibustion are the two best known aspects of traditional Chinese medicine (TCM) in the U.S. and are used by many Americans. Acupuncture is a family of procedures involving penetration of specific superficial anatomic locations on the skin called acupuncture points with thin, solid, generally metallic, needles. Closely related to and often practices with acupuncture is moxibustion, the local and focused application of heat to acupuncture points using a compressed, powdered combustible substance (moxa), which is burned at or near the points to be stimulated.

There are a variety of approaches to functional diagnosis and treatment in American acupuncture that incorporate medical traditions from China, Japan, Korea, France, and other countries. Because an acupuncture treatment involves a procedure rather than a drug, it has been very difficult to study using the gold standard of randomized double-blind trials. Nevertheless, acupuncture is used by millions of American patients and performed by thousands of physicians, dentists, masters-degree level acupuncturists, and other practitioners for relief or prevention of pain and a variety of health problems. The FDA, after years of deliberation, recently removed acupuncture needles from the category of ''experimental medical devices'' and now regulates them just as it does other devices such as surgical scalpels and hypodermic syringes, under good manufacturing practices and single-use standards of sterility.

Over the years, NIH has funded a variety of research studies on acupuncture, including studies on the mechanisms by which acupuncture may have its effects as well as clinical trials and other studies. There is also a considerable body of international literature on the risks and benefits of acupuncture, and the World Health Organization (WHO) has listed a variety of medical conditions that may benefit from the use of acupuncture and/or moxibustion. Such applications may include prevention and treatment of nausea and vomiting; treatment of pain and addictions to alcohol, tobacco, and other drugs; prevention of pulmonary problems such as asthma and bronchitis and rehabilitation from neurological damage such as stroke.

To address the most important issues regarding the American use of acupuncture, the NIH has organized this 2½ day conference to evaluate the scientific and medical data on the uses, risks, and benefits of acupuncture procedures for a variety of conditions. The conference will bring together national and international experts in the fields of acupuncture, pain, psychology, psychiatry, physical medicine and rehabilitation, drug abuse, pulmonology, health policy, epidemiology, statistics, physiology, and biophysics as well as representatives from the public.

After 1½ days of presentations and audience discussion, an independent, non-Federal consensus panel chaired by Dr. David Ramsay, president of the University of Maryland Medical Center, will weigh the scientific evidence and write a draft statement that it will present to the audience on the third day. The consensus statement will address the following key questions:

* What is the efficacy of acupuncture, compared with placebo or sham acupuncture, in the conditions for which sufficient data are available to evaluate?

* What is the place of acupuncture in the treatment of various conditions (for which sufficient data are available), in comparison with or in combination with other interventions (including no intervention)?

* What is known about the biological effects of acupuncture that helps us understand how it works?

* What issues need to be addressed so that acupuncture may be appropriately incorporated into today's health care system?

* What are the directions for future research?

The primary sponsors of this meeting are the NIH Office of Alternative Medicine and the NIH Office of Medical Applications of Research. The conference is cosponsored by the National Cancer Institute, the National Institute of Arthritis and Musculoskeletal and Skin Diseases, the National Heart, Lung, and Blood Institute, the National Institute of Allergy and Infectious Diseases, the National Institute on Drug Abuse, and the NIH Office of Research on Women's Health.

Advance information on the conference program and conference registration materials may be obtained from Prospect Associates, 1801 Rockville Pike, Suite 500, Rockville, Maryland 20852, (301) 468–MEET, by e-mail at NIHconsensus@ProspectAssoc.com, or by visiting http://consensus.nih.gov on the World Wide Web.

The consensus statement will be submitted for publication in professional journals and other publications. In addition, the statement will be available beginning November 5, 1997, from the NIH Consensus Program Information Center, P.O. Box 2577, Kensington, Maryland 20891, phone 1–888–NIH–CONSENSUS (1–888–644–2667) and from the NIH Consensus Development Program site on the World Wide Web at http://consensus.nih.gov.

Dated: September 3, 1997.

Ruth L. Kirschstein,

Deputy Director, NIH.

[FR Doc. 97–24274 Filed 9–12–97; 8:45 am]

BILLING CODE 4140–01–M

DEPARTMENT OF THE INTERIOR

[MT–960–1150–00]

Call for Nomination for Resource Advisory Council

AGENCY: Bureau of Land Management, Dakotas District, Interior.

ACTION: Notice of Resource Advisory Council call for nominations.

SUMMARY: The purpose of this notice is to solicit public nominations for an opening on the Dakotas District Resource Advisory Council. The council provides advice and recommendations to BLM for land-use planning and management of the public lands within North and South Dakota. Public nominations will be accepted for 30 days after publication of this notice.

The Federal Land Policy and Management Act (FLMPA) directs the Secretary of the Interior to involve the public in decisions related to planning for and management of lands administered by the BLM. Section 309 of FLMPA directs the Secretary to create a citizen-based council, established and authorized in accordance with the requirements of the Federal Advisory Committee Act (FACA). As required by FACA, Resource Advisory Council members must represent user or interest groups affected by the BLM's governance of public lands.

The vacancy to be filled will represent environmental and resource conservation organizations, archaeological and historic interests, or wild horse and burro groups in North Dakota.

Individuals may nominate themselves or others. Nominees must be residents of North Dakota. Evaluation of nominees will be based on education, training, understanding of the issues, and knowledge of the geographical area of the Council. Nominees should have demonstrated a commitment to collaborative resource-decision making. All nominations must be accompanied by a letter of reference from represented interests or organizations, a completed background information nomination form, as well as any other information that speaks to the nominee's qualifications.

FOR FURTHER INFORMATION CONTACT: Douglas J. Burger, District Manager, Dakotas District Office, 2933 3rd Avenue West, Dickinson, ND 58601. Telephone (701) 225–9148.

Dated: September 9, 1997.

Douglas J. Burger,

District Manager.

[FR Doc. 97–24343 Filed 9–12–97; 8:45 am]

BILLING CODE 4310–DN–P

DEPARTMENT OF THE INTERIOR

Bureau of Land Management

[NV–930–1430–00; N–61076]

Notice of Realty Action: Lease/Conveyance for Recreation and Public Purposes

AGENCY: Bureau of Land Management, Interior.

ACTION: Recreation and Public Purpose Lease/Conveyance.

SUMMARY: The following described public land in Las Vegas, Clark County, Nevada has been examined and found suitable for lease/conveyance for recreational or public purposes under the provisions of the Recreation and Public Purposes Act, as amended (43 U.S.C. 869 *et seq.*). The Clark County Department of Public Works proposes to use the land for development of a community park.

Mount Diablo Meridian, Nevada

T. 22 S., R. 61 E., Section 33,
E½SE¼SW¼SE¼,
SW¼SE¼SE¼,W½SE¼SE¼SE¼,
NE¼SE¼SE¼SE¼,S½NE¼SE¼SE¼.

Containing 27.5 acres, more or less.

The land is not required for any federal purpose. The lease/conveyance is consistent with current Bureau planning for this area and would be in the public interest. The lease/patent, when issued, will be subject to the provisions of the Recreation and Public Purposes Act and applicable regulations of the Secretary of the Interior, and will contain the following reservations to the United States:

1. A right-of-way thereon for ditches or canals constructed by the authority of the United States, Act of August 30, 1890 (43 U.S.C. 945).

2. All minerals shall be reserved to the United States, together with the right to prospect for, mine and remove such deposits from the same under applicable law and such regulations as the Secretary of the Interior may prescribe and will be subject to:

1. An easement 30 feet in width along the North and East boundaries of the property and 60-feet in width along the South boundary of the East Half (E½) of the Southeast Quarter (SE¼) of the Southwest Quarter (SW¼) of the Southeast Quarter (SE¼) of Section 33, Township 22 South, Range 61 East, M.D.M., Clark County, Nevada; Together with a 25-foot spandrel area in the Southeast corner thereof concave Northwesterly and being tangent to the North line of the South 60-feet and the West line of the East 30-feet; and Together with a 15-foot spandrel area in the Northeast corner thereof concave Southwesterly and being tangent to the West line of the East 30-feet and the South line of the North 30-feet.

2. An easement 30-feet in width along the North and West boundaries and 60-feet in width along the South boundary of the Southwest Quarter (SW¼) of the Southeast Quarter (SE¼) of the Southeast Quarter (SE¼) of Section 33, Township 22 South, Range 61 East, M.D.M., Clark County, Nevada; Together with a 15-foot spandrel area in the Northwest corner thereof concave Southeasterly and being tangent to the South line of the North 30-feet and the East line of the West 30-feet; and Together with a 25-foot spandrel area in the Southwest corner thereof concave Northeasterly and being tangent to the East line of the West 30-feet and the North line of the South 60-feet.

3. An easement 30-feet in width along the North boundary and 60-feet in width along the south boundary of the West Half (W½) of the Southeast Quarter (SE¼) of the Southeast Quarter (SE¼) of the Southeast Quarter (SE¼) of Section 33, Township 22 South, Range 61 East, M.D.M., Clark County, Nevada.

4. An easement 30-feet in width along the North boundary and 50-feet in width along the East boundary of the Northeast Quarter (NE¼) of the Southeast Quarter (SE¼) of the Southeast Quarter (SE¼) of the Southeast Quarter (SE¼) of Section 33, Township 22 South, Range 61 East, M.D.M., Clark County, Nevada; Together with a 25-foot spandrel area in the Northeast corner thereof concave Southwesterly and being tangent to the West line of the East 50-feet and the South line of the North 30-feet.

5. An easement 30-feet in width along the West and South boundaries and 50-feet in width along the East boundary of the South Half (S½) of the Northeast Quarter (NE¼) of the Southeast Quarter (SE¼) of the Southeast Quarter (SE¼) of the Section 33, Township 22 South, Range 61 East, M.D.M., Clark County, Nevada; TOGETHER with a 15-foot spandrel area in the Southwest corner thereof concave Northeasterly and being tangent to the East line of the West 30-feet and to the North line of the South 30-feet; and TOGETHER with a 25-foot spandrel area in the Southeast corner thereof concave Northwesterly and being tangent to the North line of the South 30-feet and the West line of the East 50-feet.

6. Those rights for right-of-way purposes which have been granted to Las Vegas Valley Water District by Permit No. N–61268 under the Act of October 21, 1976 (PL 94–579).

Detailed information concerning this action is available for review at the

Office of the Bureau of Land Management, Las Vegas Field Office, 4765 W. Vegas Drive, Las Vegas, Nevada.

Upon publication of this notice in the **Federal Register**, the above described land will be segregated from all other forms of appropriation under the public land laws, including the general mining laws, except for lease/conveyance under the Recreation and Public Purposes Act, leasing under the mineral leasing laws and disposal under the mineral material disposal laws.

For a period of 45 days from the date of publication of this notice in the **Federal Register**, interested parties may submit comments regarding the proposed lease/conveyance for classification of the lands to the District Manager, Las Vegas Field Office, 4765 Vegas Drive, Las Vegas, Nevada 89108.

Classification Comments

Interested parties may submit comments involving the suitability of the land for a community park facility. Comments on the classification are restricted to whether the land is physically suited for the proposal, whether the use will maximize the future use or uses of the land, whether the use is consistent with local planning and zoning, or if the use is consistent with State and Federal programs.

Application Comments

Interested parties may submit comments regarding the specific use proposed in the application and plan of development, whether the BLM followed proper administrative procedures in reaching the decision, or any other factor not directly related to the suitability of the land for a community park facility.

Any adverse comments will be reviewed by the State Director. In the absence of any adverse comments, the classification of the land described in this Notice will become effective 60 days from the date of the publication in the **Federal Register**. The lands will not be offered for lease/conveyance until after the classification becomes effective.

Dated: August 27, 1997.

Michael F. Dwyer,

District Manager, Las Vegas, NV.

[FR Doc. 97–24302 Filed 9–12–97; 8:45 am]

BILLING CODE 4310–HC–M

DEPARTMENT OF THE INTERIOR

Bureau of Land Management (BLM)

[AK–020–07–1220–00–241A]

Notice of Special Rules and Regulations for the White Mountains National Recreation Area (WMNRA) and Associated Recreation Facilities

This notice rescinds and replaces the White Mountains National Recreation Area Special Rules and Regulations previously published in the **Federal Register** (53 FR 25696, July 8, 1988). This notice corrects omissions made in the original notice and has been updated pursuant to the White Mountains Gateway Project environmental assessment.

These special rules and regulations apply to all lands and water surfaces within the White Mountains National Recreation Area, that portion of BLM-managed lands between the WMNRA and the Steese and Elliott Highways, the Colorado Creek Trailhead, the Fred Blixt Cabin, and the Cripple Creek Campground and Cabin, as shown on the White Mountains National Recreation Area Off-Road Vehicle Designations Map. These rules and regulations are subject to valid existing rights.

This order is issued pursuant to 43 CFR subpart 8364.1 and implements provisions of the White Mountains NRA Resource Management Plan signed on February 2, 1986. This order will remain in effect until rescinded or modified by BLM's Northern District Manager.

1. Motorized Equipment

a. Operating off-road vehicles (ORVs) is restricted in some areas. See the White Mountains National Recreation Area Off-Road Vehicle Designations Map available at BLM's Northern District Office for information on designated ORV use areas.

b. Using motorized equipment for mineral collection for personal use is prohibited. Mineral collection for personal recreation, using a gold pan, shovel, portable sluice box (maximum size 16 inches x 5 feet), rocker box or other non-motorized means is allowed without written authorization in areas where there are no existing mining claims or private lands, provided such use does not cause unnecessary or undue damage to the environment. The use of motorized equipment permitted under 43 CFR subpart 3809 shall require written authorization from BLM's Northern District Manager.

c. Launching boats with motors exceeding 15 horsepower without written authorization from BLM's Northern District Manager is prohibited in the Nome Creek valley.

d. Using motorized equipment, including generators and chainsaws, in the Nome Creek valley must be in accordance with posted rules.

e. Using hovercraft or airboats is prohibited.

2. Occupancy and Use

a. Camping at one site within the area covered by this order for a period longer than ten (10) days in any one calendar year without written authorization from BLM's Northern District Manager is prohibited. Camping in a campground within the area covered by this order for a period longer than ten (10) consecutive days in any one calendar year without written authorization from BLM's Northern District Manager is prohibited.

b. Under the authorities of 36 CFR part 71 and 43 CFR 8372.1, a daily use fee will be collected in advance for overnight occupancy of public recreation fee sites located in, and associated with, the White Mountains National Recreation Area.

c. Users must register prior to occupying a public recreation cabin. Reservations may be made up to 30 days in advance and must be paid for at the time they are made. The original permit must accompany the user(s) during their stay at the cabin(s). Maximum stay is three consecutive nights per cabin.

The following recreation facilities located within or near the White Mountains National Recreation Area are specialized sites requiring recreation use permits and site fees:

Borealis-LeFevre Cabin
Cache Mountain Cabin
Caribou Bluff Cabin
Colorado Creek Cabin
Cripple Creek Cabin
Crowberry Cabin
Fred Blixt Cabin
Lee's Cabin
Moose Creek Cabin
Windy Gap Cabin
Wolf Run Cabin
Cripple Creek Campground
Mount Prindle Campground
Ophir Creek Campground

d. Discharging firearms within one-quarter (¼) mile of campgrounds and public recreation cabins, as well as across or along roads and trails, is prohibited.

e. Leaving burning or smoldering campfires unattended is prohibited.

f. Subject to valid existing rights, constructing permanent or semi-permanent structures (including cabins, caches, water dams, or diversions) without written authorization from

BLM's Northern District Manager is prohibited.

g. Camping and/or campfires are prohibited within twenty-five (25) feet of trails.

The foregoing provisions are not applicable to any federal, state, or local employee or law enforcement officer, or any member of any organized rescue or fire suppression force in the performance of an official duty.

Maps identifying designated areas are available at the office listed below. Any person convicted of violating this order is subject to the penalties prescribed in 43 CFR subpart 8340.0–7 and/or 43 CFR 8360.0–7.

Direct questions and responses to: Northern District Manager, Bureau of Land Management, 1150 University Avenue, Fairbanks, Alaska 99709–3899, (907) 474–2200.

Dated: August 19, 1997.

Richard Bouts,

Associate Manager, Northern District Office.

[FR Doc. 97–24300 Filed 9–12–97; 8:45 am]

BILLING CODE 4310–JA–P

DEPARTMENT OF THE INTERIOR

National Park Service

60-day Notice of Intention to Request Clearance of Collection of Information—Opportunity for Public Comment

AGENCY: Department of the Interior, National Park Service, and 16 Units of the National Park System.

ACTION: Notice and request for comments.

SUMMARY: The National Park Service Visitor Services Project is proposing to conduct visitor studies at up to 16 parks during 1998:

	Estimated numbers of	
	Responses	Burden hours
Denali National Park	600	120
Chattahoochee River National Recreation Area	700	140
Jean Lafitte National Historical Park & Preserve	800	160
Klondike Gold Rush National Historical Park	500	100
Glacier Bay National Park	600	120
National Capital Parks Central (Lincoln, Jefferson, etc.)	800	160
George Washington Memorial Parkway—Theodore Roosevelt Island	500	100
Acadia National Park	800	160
Whiskeytown National Recreation Area	800	160
Cumberland Island National Seashore	500	100
Cape Cod National Seashore	600	120
Andersonville National Historic Site	500	100
Eisenhower National Historic Site	500	100
Big Cypress National Preserve	500	100
Lassen Volcanic National Park	700	140
Gates of the Arctic National Park & Preserve	400	80
Annual totals	9800	1960

Under provisions of the Paperwork Reduction Act of 1995 and 5 CFR Part 1320, Reporting and Record Keeping Requirements, the National Park Service is soliciting comments on the need for gathering the information in the proposed visitor studies listed above. The NPS is also asking for comments on the practical utility of the information being gathered; the accuracy of the burden hour estimate; ways to enhance the quality, utility, and clarity of the information to be collected; and ways to minimize the burden to respondents, including use of automated information collection techniques or other forms of information technology.

The NPS goal in conducting these surveys is to learn visitor demographics and visitors' opinions about services and facilities in these parks. Results of the surveys will be used by NPS managers to improve services, protect resources, and thereby better serve the visitors.

DATES: Public comments will be accepted on or before November 14, 1997.

SEND COMMENTS TO: Margaret Littlejohn, Visitor Services Project Coordinator, Cooperative Part Studies Unit, College of Forestry, Wildlife and Range Sciences, University of Idaho, Moscow, Idaho 83844–1133, phone: 208–885–7863.

FOR FURTHER INFORMATION CONTACT: Margaret Littlejohn. Voice: 208–885–7863, Fax: 208–885–4261, Email: <littlej@uidaho.edu>.

SUPPLEMENTARY INFORMATION:

Title: Visitor Services Project Visitor Surveys at 16 Parks.

Bureau Form Number: None.

OMB Number: To be requested.

Expiration date: To be requested.

Type of request: Request for new clearance.

Description of need: The National Park Service needs information concerning visitor demographics and visitor opinions about the services and facilities that the National Park Service provides in each of the parks proposed to be surveyed. The proposed information to be collected from visitors in these parks is not available from existing records, sources, or observations.

Automated data collection: At the present time, there is no automated way to gather this information, since it includes asking visitors to evaluate services and facilities that they used during their park visit. The intrusion on visitors in each park is minimized by only contacting visitors during one 7 day period at that park.

Description of Respondents: A sample of visitors to each of these parks.

Estimated average number of respondents: The number depends on the size of the park being surveyed and is estimated to range from 400 to 800 respondents per park.

Estimated average number of responses: Each respondent will

respond only one time, so the number of responses will be the same as the number of respondents.

Estimated average burden hours per response: 12 minutes.

Frequency of response: 1 time per respondent.

Estimated annual reporting burden: The number depends on the size of the park being surveyed and is estimated to range from 80 to 160 hours per park.

Diane M. Cooke,

Information Collection Clearance Officer, WASO Administrative Program Center, National Park Service.

[FR Doc. 97–24331 Filed 9–12–97; 8:45 am]

BILLING CODE 4310–70–M

DEPARTMENT OF THE INTERIOR

National Park Service

Facility Development Plan/Final Environmental Impact Statement, Shenandoah National Park, VA

AGENCY: National Park Service, Interior.

ACTION: Notice of availability.

SUMMARY: Pursuant to Council on Environmental Quality regulations and National Park Service policy, the National Park Service (NPS) announces the availability of the *Facility Development Plan/Final Environmental Impact Statement* (INT–FES–97–21) for Shenandoah National Park, Virginia. The plan and final EIS were prepared by the National Park Service in accordance with section 102(2)(C) of the National Environmental Policy Act of 1969.

The *Facility Development Plan/Final Environmental Impact Statement* is abbreviated. The draft and final environmental impact statements together describe the final plan, its alternatives, and all significant environmental impacts. Comments received on the draft environmental impact statement are included, as well as appropriate responses. No comments resulted in significant changes in the proposed action.

Copies of the plan and final EIS will be distributed to cooperating agencies, interested groups, individuals and institutions, and local libraries. The plan will also be available at Shenandoah National Park administrative offices.

FOR FURTHER INFORMATION CONTACT: Connie Rudd, Assistant Superintendent, Shenandoah National Park, Route 4, Box 348, Luray, Virginia 22835. Telephone: (703) 999–3400.

SUPPLEMENTARY INFORMATION: A range of issues and preliminary alternatives for the Facility Development Plan were developed and analyzed. Alternatives considered included ''no action''; development of facilities and housing in accordance with the *General Management Plan* (1983); moving all housing and development out of the park; and a mixture of new or rehabilitated housing and facilities at selected locations throughout the park combined with leased housing in adjacent towns. For copies of the *Facility Development Plan/Final Environmental Impact Statement* please contact the Assistant Superintendent at the above address.

Marie Rust,

Regianl Director, Northeast Area.

[FR Doc. 97–24330 Filed 9–12–97; 8:45 am]

BILLING CODE 4310–70–M

DEPARTMENT OF THE INTERIOR

National Park Service

Keweenaw National Historical Park Advisory Commission

AGENCY: National Park Service, Interior.

ACTION: Notice of meeting.

SUMMARY: This notice announces an upcoming meeting of the Keweenaw National Historical Park Advisory Commission. Notice of this meeting is required under the Federal Advisory Committee Act (Public Law 92–463).

DATES: Tuesday, October 28, 1997; 8:30 a.m. until 4:30 p.m.

ADDRESSES: Keweenaw National Historical Park Headquarters, 100 Red Jacket Road (2nd floor), Calumet, Michigan 49913–0471.

This meeting is open to the public. We will begin with the Chairman's welcome; minutes of the previous meeting; update on the general management plan; update on park activities; old business; new business; next meeting date; adjournment.

FOR FURTHER INFORMATION CONTACT: Superintendent, Keweenaw National Historical Park, P.O. Box 471, Calumet, Michigan 49913–0471, or telephone 906–337–3168.

SUPPLEMENTARY INFORMATION: The Keweenaw National Historical Park was established by Public Law 102–543 on October 27, 1992.

Dated: August 26, 1997.

William W. Schenk,

Regional Director, Midwest Region.

[FR Doc. 97–24333 Filed 9–12–97; 8:45 am]

BILLING CODE 4310–70–P

DEPARTMENT OF THE INTERIOR

National Park Service

Sleeping Bear Dunes National Lakeshore Advisory Commission

AGENCY: National Park Service, Interior.

ACTION: Notice of final meeting.

SUMMARY: This notice sets the schedule for the final meeting of the Sleeping Bear Dunes National Lakeshore Advisory Commission. Notice of this meeting is required under the Federal Advisory Committee Act (Public Law 92–463).

DATE, TIME, AND ADDRESS: Friday, October 17, 1997; 9:30 a.m. to 12 noon.

AGENDA: Sleeping Bear Dunes National Lakeshore Headquarters Empire, Michigan. The Chairman's welcome; minutes of the previous meeting; update on park activities; old business; public input; adjournment. The meeting is open to the public.

FOR FURTHER INFORMATION CONTACT: Superintendent, Sleeping Bear Dunes, Ivan Miller, 9922 Front Street, Empire, Michigan 49630; or telephone 616–326–5134.

SUPPLEMENTARY INFORMATION: The Sleeping Bear Dunes National Lakeshore Advisory Commission was established on October 21, 1970, by Public Law 91–479 and terminated on October 21, 1987. The Commission was reestablished and extended by Public Law 100–558, dated October 28, 1988. This charter will officially expire on October 21, 1997. The purpose of the commission, according to its charter, was to advise the Secretary of the Interior with respect to matters relating to the administration, protection, and development of the Sleeping Bear Dunes National Lakeshore, including the establishment of zoning by-laws, construction, and administration of scenic roads, procurement of land, condemnation of commercial property, and the preparation and implementation of the land and water use management plan.

Dated: August 27, 1997.

David N. Given,

Acting Regional Director, Midwest Region.

[FR Doc. 97–24332 Filed 9–12–97; 8:45 am]

BILLING CODE 4310–70–P

DEPARTMENT OF THE INTERIOR

National Park Service

Notice of Inventory Completion for Native American Human Remains and Associated Funerary Objects from the Illinois counties of La Salle, Madison, Perry, and Randolph in the Possession of the Anthropology Section, Illinois State Museum, Springfield, IL

AGENCY: National Park Service

ACTION: Notice

Notice is hereby given in accordance with provisions of the Native American Graves Protection and Repatriation Act (NAGPRA), 25 U.S.C. 3003 (d), of the completion of an inventory of human remains and associated funerary objects from the Illinois counties of La Salle, Madison, Perry, and Randolph in the Possession of the Anthropology Section, Illinois State Museum, Springfield, IL.

A detailed assessment of the human remains was made by Illinois State Museum professional staff in consultation with representatives of the Peoria Tribe of Oklahoma, Miami Tribe of Oklahoma, Ho-Chunk Nation, Winnebago Tribe of Nebraska, Sac & Fox Nation of Missouri, Sac & Fox Nation of Oklahoma, Sac & Fox Tribe of the Mississippi in Iowa, Kickapoo Tribe of Kansas, Kickapoo Tribe of Oklahoma, Forest County Potawatomi Community, Hannahville Indian Community, Pokagon Band of Potawatomi Indians, and Prairie Band of Potawatomi Indians of Kansas.

In 1972, human remains representing eight individuals were recovered at Fort de Chartres III (11R127), Randolph County, during archeological excavations conducted by Dr. Margaret Kimball Brown to develop more accurate reconstructions and interpretive programming at this state park. No known individuals were identified. The 9,834 associated funerary objects include one embossed silver arm band, 33 silver brooches, three silver crosses, 80 iron tinkling cones, one iron spear point, three brass bells, three brass necklaces, four copper rings, one bone-handled case knife, and 9,585 glass seed beads.

The Fort de Chartres III site is the last of a historically well-documented series of forts established as the seat of French military and civil power in Illinois from 1719 until the final fort was handed over to the British in 1765. This third construction consisted of a substantial stone fortress dating from the mid-1750s. Historical and archeological evidence clearly indicate this fort was also a center of Native American activity. Two contemporary Michigamea villages (Kolmer and Waterman sites) have been documented near this fort. Based on dentition, cranial characteristics, and the associated funerary objects, these individuals have been determined to be Native American. Based on the location of the burials within the fort itself and the European trade goods present, these individuals were likely interred after the British abandonment of the fort in 1772 and prior to 1832, when the remaining tribes in Illinois were removed across the Mississippi River. The Michigamea were members of the Illini confederacy, along with the Cahokia, Kaskaskia, Moingwena, Peoria, and Tamaroa. The present day descendant of the Illini confederacy is the Peoria Tribe of Oklahoma.

In 1952, human remains representing one individual were recovered from the Guebert site (11R1), Randolph County, during joint archeological excavations by the Illinois State Museum and Southern Illinois University. No known individual was identified. The four associated funerary objects include one lead cross, two fragments of brass or copper, and one fragment of a German silver trigger guard.

The Guebert site is an historic village site known in French documents as ''Indian Kaskaskia'' which was occupied between 1719 and about 1765 by Kaskaskia, Michigamea, and Tamaroa people of the Illini confederacy. Based on site context, cranial chartacteristics and the associated funerary objects, this individual has been determined to be Native American and most likely affiliated with the Illini confederacy. The present day descendant of the Illini confederacy is the Peoria Tribe of Oklahoma.

In 1948, human remains representing one individual were recovered from Feature 5 at the Hotel Plaza site (11LS61), La Salle County, during joint archeological excavations by the Illinois State Museum and the University of Chicago. No known individual was identified. The three associated funerary objects include one chert hammerstone, one sandstone abrader, and one La Salle Filleted pottery sherd.

The Hotel Plaza site, located on a floodplain of the Illinois River adjacent to Starved Rock, contains mixed precontact occupations (Archaic and Woodland periods) and features dating into the historic period. Based on cranial characteristics and the associated funerary objects, this individual has been identified as Native American. Feature 5 at the Hotel Plaza site has been identified as an historic feature based on the presence of La Salle Filleted pottery (a postcontact ceramic style) and the location of this burial overlaying and therefore postdating another feature containing historic artifacts. At various times during the late 1600s and early 1700s, this section of the Illinois River valley was occupied by tribes including the Kaskaskia and other Illini groups, the Kickapoo, the Miami, the Missouri, the Piankeshaw, the Shawnee, and the Wea. Historical documents indicate the Peoria occupied Hotel Plaza and Starved Rock from about 1711 to 1720, the most likely date range for this burial and therefore likely affiliated with the Peoria Tribe of Oklahoma.

In 1993, human remains representing one individual were recovered from the Jamestown site (SIUC 21C4–14), Perry County, during salvage excavations related to the Burning Star #4 surface mine. No known individual was identified. The 65 associated funerary objects include a French brass kettle, a woven mat of native fibers, a French butcher knife, one silver brooch, one brass or copper C-shaped wire bracelet, and two sets of white-tailed deer ribs.

Although the Jamestown site has been identified as a Late Woodland occupation site dating between 450–1000 A.D. based on site organization, radiocarbon dates, material culture, and feature morphology, this burial dates from the early to middle eighteenth century based on the grave construction and associated funerary objects. Based on the associated funerary objects, this individual is Native Amerian and may have been contemporary with the Illini occupations of the Guebert and Kolmer sites, and is likely to be Kaskaskia or Michigamea. The Kaskaskia and Michigamea were members of the Illini confederacy whose present day descendant is the Peoria Tribe of Oklahoma.

Between 1969–1972, human remains representing thirteen individuals were recovered from the River L'Abbe Mission site (11MS2), Madison County, during excavations conducted by Melvin L. Fowler and Elizabeth D. Benchley of the University of Wisconsin-Milwaukee and Charles J. Bareis of the University of Illinois, Urbana-Champaign. No known individuals were identified. The 6,996 associated funerary objects include one molded lead cross, eight molded lead brooches, eight brass tinkling cones, one brass hawk-bell, one brass Liberty-type bell, iron hardware from a burial chest used as a coffin, two iron clasp-knife blades, five catlinite triangular pendants, 28 marine shell triangular beads, two glass triangular pendants, and 6,723 glass beads.

The River L'Abbe Mission site is located on the first terrace of Monks Mound, a large Mississippian temple mound on the Mississippi River floodplain. This occupation was a French colonial mission and an adjoining Cahokia village established in 1735 and abandoned in 1752 after the Cahokia village was attacked by Sauk, Fox, Kickapoo, and Sioux war parties. Based on site context and the associated funerary objects, these individuals are Native American and affiliated with the 1735–1752 Cahokia village occupation. The Cahokia were members of the Illini confederacy whose present day descendant is the Peoria Tribe of Oklahoma.

Between 1947–1950 and in 1980, human remains representing sixteen individuals were recovered from the Starved Rock site (11LS12), La Salle County, by archeologists of the Illinois State Museum, University of Chicago, Illinois Department of Conservation and Illinois State University. No known individuals were identified. The 2,633 associated funerary objects include twelve brass Jesuit rings, one brass bead, twelve brass tinkling cones, one brass neck circlet, four brass bracelets, two copper coils, one iron knife blade, one gunflint, and 2,491 glass beads.

Starved Rock is a prominent landmark on the south bank of the Illinois River occupied for thousands of years by Native Americans. Historical documents indicate Starved Rock was the site of a French fort (1673–1692) and the site of a Peoria occupation (1711–1720). Based on dentition, cranial characteristics, and associated funerary objects, these individuals have been determined to be Native American and are likely to have been Kaskaskia, Peoria, or another of the tribes of the Illini confederacy. The present day descendant of the Illini confederacy is the Peoria Tribe of Oklahoma.

In 1971, human remains representing 59 individuals were recovered from the Waterman site (11RI122), Randolph County, during excavations conducted by Margaret Kimball Brown of Michigan State University under a grant from the Illinois Department of Conservation. No known individuals were identified. The 13,113 associated funerary objects include six silver bracelets, two silver crosses, two silver gorgets, three silver rings, 28 copper tinkling cones, 26 copper beads, twelve brass bells, one brass cross, one brass bracelet, one faience hair pendant, two Micmac pipe bowls, one kaolin pipe bowl, one mirror, two brandy bottles, 12,705 glass beads, and a small French pistol which dates to the early 1700s.

The Waterman site is a historically documented Michigamea village established in 1753 after the destruction of the Michigamea village at the Kolmer site in 1752 in an attack by the Sauk, Fox, Kickapoo, and Sioux. The Waterman village site was abandoned in 1765 when the British took control of Fort de Chartres. Based on dentition, cranial characteristics, and the associated funerary objects, these individuals have been determined to be Native American; and are likely affiliated with the 1753–1765 Michigamea village. The Michigamea were members of the Illini confederacy whose present day descendant is the Peoria Tribe of Oklahoma.

In 1947, 1992, and 1995, human remains representing 21 individuals were recovered from the Zimmerman site (11LS13), located at the Grand Village of the Illinois State Historic Site, La Salle County, during excavations conducted by the University of Chicago, the Illinois State Museum, and Archaeological Consultants of Normal, IL. No known individuals were identified. The 173 associated funerary objects include three brass tubular beads, twelve brass coiled-wire hair ornaments, one Danner Grooved Paddle pottery vessel, and 92 glass beads.

The Zimmerman site is a multicomponent pre- and postcontact village site located on the north bank of the Illinois river opposite Starved Rock. Based on dentition, cranial characteristics, and the associated funerary objects, these individuals have been determined to be Native American. The postcontact component is believed to be the ''Grand Village of the Kaskaskia'' noted in French historic documents and maps beginning in 1673. The principal inhabitants of the village during the late 1600s and early 1700s were the Kaskaskia, Peoria, and other members of the Illini confederacy. The Illini confederacy's present day descendant is the Peoria Tribe of Oklahoma.

Based on the above mentioned information, officials of the Illinois State Museum have determined that, pursuant to 43 CFR 10.2 (d)(1), the human remains listed above represent the physical remains of 120 individuals of Native American ancestry. Officials of the Illinois State Museum have also determined that, pursuant to 25 U.S.C. 3001 (3)(A), the 32,821 objects listed above are reasonably believed to have been placed with or near individual human remains at the time of death or later as part of the death rite or ceremony. Lastly, officials of the Illinois State Museum have determined that, pursuant to 25 U.S.C. 3001 (2), there is a relationship of shared group identity which can be reasonably traced between these Native American human remains and associated funerary objects and the Peoria Tribe of Oklahoma.

This notice has been sent to officials of the Peoria Tribe of Oklahoma, Miami Tribe of Oklahoma, Ho-Chunk Nation, Winnebago Tribe of Nebraska, Sac & Fox Nation of Missouri, Sac & Fox Nation of Oklahoma, Sac & Fox Tribe of the Mississippi in Iowa, Kickapoo Tribe of Kansas, Kickapoo Tribe of Oklahoma, Forest County Potawatomi Community, Hannahville Indian Community, Pokagon Band of Potawatomi Indians, and Prairie Band of Potawatomi Indians of Kansas. Representatives of any other Indian tribe that believes itself to be culturally affiliated with these human remains and associated funerary objects should contact Dr. Robert E. Warren, Associate Curator of Anthropology, Illinois State Museum, 1011 East Ash Street, Springfield, IL 62703; telephone: (217) 524–7903, before [*thirty days after publication in the* **Federal Register**]. Repatriation of the human remains and associated funerary objects to the Peoria Tribe of Oklahoma may begin after that date if no additional claimants come forward.

Dated: September 10, 1997.

Francis P. McManamon,

Departmental Consulting Archeologist, Manager, Archeology and Ethnography Program.

[FR Doc. 97–24375 Filed 9–12–97; 8:45 am]

BILLING CODE 4310–70–F

DEPARTMENT OF THE INTERIOR

National Park Service

Notice of Intent to Repatriate Cultural Items from Rhode Island in the Possession of the Peabody Museum of Archaeology and Ethnology, Harvard University, Cambridge, MA

AGENCY: National Park Service

ACTION: Notice

Notice is hereby given under the Native American Graves Protection and Repatriation Act, 25 U.S.C. 3005 (a)(2), of the intent to repatriate cultural items in the possession of the Peabody Museum of Archaeology and Ethnology, Harvard University, Cambridge, MA which meet the definition of ''unassociated funerary object'' under Section 2 of the Act.

The fourteen cultural items consisting of a glass bottle, glass beads, shell beads, wampum, two small brass kettles, copper wire, a copper bead, a string of wampum, metal button, a brass tube

with wooden core, a ceramic sherd, ochre, and a schist flake.

In 1869, five cultural items including a glass bottle, blue glass and shell beads, wampum, and two small brass kettles were donated to the Peabody Museum by Stephen T. Grinnell, Nathan Grinnell, and W.H.H. Howland. These items are listed in museum records as having come from graves of Pocasset Indians in Tiverton, RI. The style and type of these items date the object to the early historic period 1524–1680 A.D.

In 1902, two cultural items consisting of a copper bead and copper wire were donated to the Peabody Museum by Frank M. Whipple. These items are listed in museum records as having come from a grave in Tiverton, RI. The style of these items date to the early historic period, post–1524 A.D.

Catalog records of the Peabody Museum state these items were recovered from graves, and the types of items are consistent with other funerary objects of the early historic period. Historic documentation and recent ethnohistoric accounts indicate the lands east of Narragansett Bay, including Tiverton, RI were the traditional homelands of the Wampanoag Bands during the early historic period. Historical sources describe the Pocasset as a geographic subdivision of the Wampanoag Tribe. Additionally, consultation evidence presented by the Wampanoag Repatriation Confederation illustrates the affiliation of the Pocasset as a subdivision of the Wampanoag Tribe.

Officials of the Peabody Museum of Archeology and Ethnology have determined that, pursuant to 25 U.S.C. 3001 (3)(B), these seven cultural items are reasonably believed to have been placed with or near individual human remains at the time of death or later as part of the death rite or ceremony and are believed, by a preponderance of the evidence, to have been removed from a specific burial site of an Native American individual. Officials of the Peabody Museum of Archeology and Ethnology have also determined that, pursuant to 25 U.S.C. 3001(2), there is a relationship of shared group identity which can be reasonably traced between these seven items and the Wampanoag Repatriation Confederation, representing the Wampanoag Tribe of Gay Head, the Mashpee Wampanoag (a non-Federally recognized Indian group), and the Assonet Band of the Wampanoag Nation (a non-Federally recognized Indian group).

In 1910, three cultural items consisting of a string of wampum and metal button from Pawtucket, RI; and a brass tube with a wooden core from Middletown, RI were purchased by the Peabody Museum as part of the James Eddy Mauran collection. These items are listed in museum records as having come from graves. The type and style of these items date to the early historic period or later (post- 1524 A.D.).

In 1934, three cultural items consisting of an aboriginal ceramic sherd, a schist flake, and red ochre were donated to the Peabody Museum by Howard M. Chapin of Providence, RI. These items are listed in museum records as collected in 1921 and having come from a grave in Charlestown, RI. The type and style of these items date to the late precontact to early historic period (ca. 900—1554 A.D.).

Catalog records of the Peabody Museum state these items were recovered from graves, and the types of items are consistent with other funerary objects of the late precontact to early historic period. Historic documentation and recent ethnohistoric accounts indicate the lands west of Narragansett Bay (as well as islands within the bay), including Pawtucket and Middletown, RI were the traditional homelands of the Narragansett Tribe during the late precontact and early historic periods.

Officials of the Peabody Museum of Archeology and Ethnology have determined that, pursuant to 25 U.S.C. 3001 (3)(B), these six cultural items are reasonably believed to have been placed with or near individual human remains at the time of death or later as part of the death rite or ceremony and are believed, by a preponderance of the evidence, to have been removed from a specific burial site of an Native American individual. Officials of the Peabody Museum of Archeology and Ethnology have also determined that, pursuant to 25 U.S.C. 3001(2), there is a relationship of shared group identity which can be reasonably traced between these six items and the Narragansett Indian Tribe.

In 1910, three cultural items consisting of three blue glass beads from an unknown location within Rhode Island were purchased by the Peabody Museum as part of the James Eddy Mauran collection. These items are listed in museum records as having come from graves. The type and style of these items date to the early historic period or later (post- 1524 A.D.).

Catalog records of the Peabody Museum state these items were recovered from graves, and the types of items are consistent with other funerary objects of the late precontact to early historic period. Historic documentation and recent ethnohistoric accounts indicate traditional homelands and burial areas of the Narragansett, the Wampanoag, and the Nipmuc (a non-Federally recognized Indian group) are located within the State of Rhode Island.

Officials of the Peabody Museum of Archeology and Ethnology have determined that, pursuant to 25 U.S.C. 3001 (3)(B), these three cultural items are reasonably believed to have been placed with or near individual human remains at the time of death or later as part of the death rite or ceremony and are believed, by a preponderance of the evidence, to have been removed from a specific burial site of an Native American individual. Officials of the Peabody Museum of Archeology and Ethnology have also determined that, pursuant to 25 U.S.C. 3001(2), there is a relationship of shared group identity which can be reasonably traced between these three items and the Narragansett Indian Tribe, the Wampanoag Repatriation Confederation representing the Wampanoag Tribe of Gay Head, the Mashpee Wampanoag (a non-Federally recognized Indian group), the Assonet Band of the Wampanoag Nation (a non-Federally recognized Indian group), and the Nipmuc Tribe, a non-Federally recognized Indian group.

This notice has been sent to officials of the Narragansett Indian Tribe, the Wampanoag Repatriation Confederation representing the Wampanoag Tribe of Gay Head, the Mashpee Wampanoag (a non-Federally recognized Indian group), the Assonet Band of the Wampanoag Nation (a non-Federally recognized Indian group), and the Nipmuc Tribe, a non-Federally recognized Indian group. Representatives of any other Indian tribe that believes itself to be culturally affiliated with these objects should contact Barbara Isaac, Repatriation Coordinator, Peabody Museum of Archaeology and Ethnology, Harvard University, 11 Divinity Avenue, Cambridge, MA 02138; telephone (617) 495–2254 before October 15, 1997. Repatriation of these objects to the culturally affiliated tribes may begin after that date if no additional claimants come forward.

Dated: September 10, 1997.

Francis P. McManamon,

Departmental Consulting Archeologist, Manager, Archeology and Ethnography Program.

[FR Doc. 97–24374 Filed 9-12-97; 8:45 am]

BILLING CODE 4310–70–F

DEPARTMENT OF JUSTICE

Disability Rights Section, Civil Rights Division; Agency Information Collection Activities Under Review

ACTION: Notice of reinstatement, without change, of a previously approved collection for which approval has expired. Nondiscrimination on the basis of disability in state and local government services (transition plan).

PURPOSE: The information collection extension is published to obtain comments from the public and affected agencies. This proposed information collection was previously published in the **Federal Register** on June 16, 1997 at 62 FR 32655, allowing for a 60-day public comment period. No comments were received by the Disability Rights Section.

The purpose of this notice is to allow an additional 30 days for public comment. Comments are encouraged and will be accepted until October 15, 1997.

Written comments and/or suggestions are requested from the public and affected agencies concerning the extension of a currently approved collection of information. Your comments should address one or more of the following four points:

(1) Evaluate whether the collection of information is necessary for the proper performance of the function of the agency, including whether the information will have practical utility;

(2) Evaluate the accuracy of the agencies estimate of the burden of the collection of information;

(3) Enhance the quality, utility, and clarity of the information to be collected; and

(4) Minimize the burden of the collection of information on those who are to respond, including through the use of appropriate automated, electronic, mechanical, or other technological collection techniques or other forms of information technology (e.g., permitting electronic submission of responses).

Written comments and/or suggestions regarding the item(s) contained in this notice, especially regarding the estimated public burden and associated response time should be directed to the Office of Management and Budget (OMB), Office of Regulatory Affairs, Attention: Department of Justice Desk Office, Washington, DC 20530. Additionally, comments may be submitted to OMB via facsimile to (202) 395–7285. Comments may also be submitted to the Department of Justice (DOJ), Justice Management Division, Information Management and Security Staff, Attention: Department Clearance Office, Suite 850, 1001 G Street, NW., Washington, DC 20530. Additionally, comments may be submitted to DOJ via facsimile to (202) 514–1534.

The information collection is listed below:

(1) Type of information collection. Notice of Reinstatement, without change, of a previously approved collection for which approval has expired.

(2) The title of the form/collection. Nondiscrimination on the Basis of Disability in State and Local Government Services (Transition Plan).

(3) The agency form number and applicable component of the Department sponsoring the collection. None.

(4) Affected public who will be asked to respond, as well as a brief abstract: Primary: State, Local or Tribal Government. Under title II of the Americans with Disabilities Act, State and local governments are required operate each service, program, or activity so that the service, program, or activity, when viewed in its entirety, is readily accessible to and usable by individuals with disabilities (''program accessibility''). If structural changes to existing facilities are necessary to accomplish program accessibility, a public entity that employs 50 or more persons must develop a ''transition plan'' setting forth the steps necessary to complete the structural changes. A copy of the transition plan must be made available for public inspection.

(5) An estimate of the total number of respondents and the amount of time estimated for an average respondent to respond: 6,000 respondents at 8 hours per transition plan.

(6) An estimate of the total public burden (in hours) associated with the collection: 48,000 hours annual burden.

If additional information is required contact: Mr. Robert B. Briggs, Clearance Officer, United States Department of Justice, Information Management and Security Staff, Justice Management Division, Suite 850, Washington Center, 1001 G Street, NW., Washington, DC 20530.

Dated: September 9, 1997.

Robert B. Briggs,

Department Clearance Officer.

[FR Doc. 97–24325 Filed 9–12–97; 8:45 am]

BILLING CODE 4410–13–M

DEPARTMENT OF JUSTICE

Disability Rights Section, Civil Rights Division; Agency Information Collection Activities Under Review

ACTION: Notice of Reinstatement, without change, of a previously approved collection for which approval has expired. Nondiscrimination on the basis of disability in state and local government services (certification).

PURPOSE: The information collection extension is published to obtain comments from the public and affected agencies. This proposed information collection was previously published in the **Federal Register** on June 16, 1997 at 62 FR 32654, allowing for a 60-day public comment period. No comments were received by the Disability Rights Section.

The purpose of this notice is to allow an additional 30 days for public comment. Comments are encouraged and will be accepted until October 15, 1997.

Written comments and/or suggestions are requested from the public and affected agencies concerning the extension of a currently approved collection of information. Your comments should address one or more of the following four points:

(1) Evaluate whether the collection of information is necessary for the proper performance of the function of the agency, including whether the information will have practical utility;

(2) Evaluate the accuracy of the agencies estimate of the burden of the collection of information;

(3) Enhance the quality, utility, and clarity of the information to be collected; and

(4) Minimize the burden of the collection of information on those who are to respond, including through the use of appropriate automated, electronic, mechanical, or other technological collection techniques or other forms of information technology (e.g., permitting electronic submission of responses).

Written comments and/or suggestions regarding the item(s) contained in this notice, especially regarding the estimated public burden and associated response time should be directed to the Office of Management and Budget (OMB), Office of Regulatory Affairs, Attention: Department of Justice Desk Office, Washington, DC 20530. Additionally, comments may be submitted to OMB via facsimile to (202) 395–7285. Comments may also be submitted to the Department of Justice (DOJ), Justice Management Division,

Information Management and Security Staff, Attention: Department Clearance Office, Suite 850, 1001 G Street, NW., Washington, DC 20530. Additionally, comments may be submitted to DOJ via facsimile to (202) 514–1534.

The information collection is listed below:

(1) Type of information collection. Notice of Reinstatement, without change, of a previously approved collection for which approval has expired.

(2) The title of the form/collection. Nondiscrimination on the Basis of Disability in State and Local Government Services (Certification).

(3) The agency form number and applicable component of the Department sponsoring the collection. None.

(4) Affected public who will be asked to respond, as well as a brief abstract: Primary: State, Local or Tribal Government. Under title III of the Americans with Disabilities Act, on the application of a State or local government, the Assistant Attorney General for Civil Rights (or his or her designee) may certify that a State or local building code or similar ordinance that establishes accessibility requirements (Code) meets or exceeds the minimum requirements of the ADA for accessibility and usability of ''places of public accommodation'' and ''commercial facilities.''

(5) An estimate of the total number of respondents and the amount of time estimated for an average respondent to respond: 10 respondents per year at 32 hours per certification.

(6) An estimate of the total public burden (in hours) associated with the collection: 320 hours annual burden.

If additional information is required contact: Mr. Robert B. Briggs, Clearance Officer, United States Department of Justice, Information Management and Security Staff, Justice Management Division, Suite 850, Washington Center, 1001 G Street, NW., Washington, DC 20530.

Dated: September 9, 1997.

Robert B. Briggs,

Department Clearance Officer.

[FR Doc. 97–24326 Filed 9–12–97; 8:45 am]

BILLING CODE 4410–13–M

DEPARTMENT OF JUSTICE

Disability Rights Section, Civil Rights Division; Agency Information Collection Activities Under Review

ACTION: Notice of reinstatement, without change, of a previously approved collection for which approval has expired. Nondiscrimination on the basic of disability in state and local government services (self-evaluation).

PURPOSE: The information collection extension is published to obtain comments from the public and affected agencies. This proposed information collection was previously published in the **Federal Register** on June 16, 1997 at 62 FR 32654, allowing for a 60-day public comment period. No comments were received by the Disability Rights Section.

The purpose of this notice is to allow an additional 30 day for public comment. Comments are encouraged and will be accepted until October 15, 1997.

Written comments and/or suggestions are requested from the public and affected agencies concerning the extension of a currently approved collection of information. Your comments should address one or more of the following four points:

(1) Evaluate whether the collection of information is necessary for the proper performance of the function of the agency, including whether the information will have practical utility;

(2) Evaluate the accuracy of the agencies estimate of the burden of the collection of information;

(3) Enhance the quality, utility, and clarity of the information to be collected; and

(4) Minimize the burden of the collection of information on those who are to respond, including through the use of appropriate automated, electronic, mechanical, or other technological collection techniques or other forms of information technology (e.g., permitting electronic submission of responses).

Written comments and/or suggestions regarding the item(s) contained in this notice, especially regarding the estimated public burden and associated response time should be directed to the Office of Management and Budget (OMB), Office of Regulatory Affairs, Attention: Department of Justice Desk Office, Washington, DC 20530. Additionally, comments may be submitted to OMB via facsimile to (202) 395–7285. Comments may also be submitted to the Department of Justice (DOJ), Justice Management Division, Information Management and Security Staff, Attention: Department Clearance Office, Suite 850, 1001 G Street, NW., Washington, DC 20530. Additionally, comments may be submitted to DOJ via facsimile to (202) 514–1534.

The information collection is listed below:

(1) Type of information collection. Notice of Reinstatement, without change, or a previously approved collection for which approval has expired.

(2) The title of the form/collection. Nondiscrimination on the Basis of Disability in State and Local Government Services (Self-Evaluation).

(3) The agency form number and applicable component of the Department sponsoring the collection. None.

(4) Affected public who will be asked to respond, as well as a brief abstract: Primary: State, Local or Tribal Government. Under title II of the Americans with Disabilities Act, State and local governments are required to evaluate their current services, policies, and practices for compliance with the ADA. Under certain circumstances, such entities must also maintain the results of such self-evaluation of file for public review.

(5) An estimate of the total number of respondents and the amount of time estimated for an average respondent to respond: 15,000 respondents at 6 hours per self-evaluation.

(6) An estimate of the total public burden (in hours) associated with the collection: 90,000 hours and annual burden.

If additional information is required contact: Mr. Robert B. Briggs, Clearance Officer, United States Department of Justice, Information Management and Security Staff, Justice Management Division, Suite 850, Washington Center, 1001 G Street, NW., Washington, DC 20530.

Dated: September 9, 1997.

Robert B. Briggs,

Department Clearance Officer.

[FR Doc. 97–24327 Filed 9–12–97; 8:45 am]

BILLING CODE 4410–13–M

DEPARTMENT OF JUSTICE

Disability Rights Section, Civil Rights Division; Agency Information Collection Activities Under Review

ACTION: Notice of new information collection. Title II of the Americans With Disabilities Act of 1990/section 504 of the Rehabilitation Act of 1973 Discrimination Complaint Form.

PURPOSE: The proposed information collection is published to obtain comments from the public and affected agencies. This proposed information collection was previously published in the **Federal Register** on June 16, 1997 at 62 FR 32655, allowing for a 60-day public comment period. No comments

were received by the Disability Rights Section.

The purpose of this notice is to allow an additional 30 days for public comment. Comments are encouraged and will be accepted until October 15, 1997.

Written comments and/or suggestions are requested from the public and affected agencies concerning the proposed collection of information. Your comments should address one or more of the following four points:

(1) Evaluate whether the collection of information is necessary for the proper performance of the function of the agency, including whether the information will have practical utility;

(2) Evaluate the accuracy of the agencies estimate of the burden of the collection of information;

(3) Enhance the quality, utility, and clarity of the information to be collected; and

(4) Minimize the burden of the collection of information on those who are to respond, including through the use of appropriate automated, electronic, mechanical, or other technological collection techniques or other forms of information technology (e.g., permitting electronic submission of responses).

Written comments and/or suggestions regarding the item(s) contained in this notice, especially regarding the estimated public burden and associated response time should be directed to the Office of Management and Budget (OMB), Office of Regulatory Affairs, Attention: Department of Justice Desk Office, Washington, DC 20530. Additionally, comments may be submitted to OMB via facsimile to (202) 395–7285. Comments may also be submitted to the Department of Justice (DOJ), Justice Management Division, Information Management and Security Staff, Attention: Department Clearance Office, Suite 850, 1001 G Street, NW.,Washington, DC 20530. Additionally, comments may be submitted to DOJ via facsimile to (202) 514–1534.

The information collection is listed below:

(1) Type of information collection. New Collection.

(2) The title of the form/collection. Title II of the Americans with Disabilities Act/Section 504 of the Rehabilitation Act of 1973 Discrimination Complaint Form.

(3) The agency form number and applicable component of the Department sponsoring the collection. No form number. Disability Rights Section, Civil Rights Division, U.S. Department of Justice.

(4) Affected public who will be asked to respond, as well as a brief abstract: Primary: Individuals alleging discrimination by public entities based on disability. Under title II of the Americans with Disabilities Act, an individual who believes that he or she has been subjected to discrimination on the basis of disability by a public entity may, by himself or herself or by an authorized representative, file a complaint. Any Federal agency that receives a complaint of discrimination by public entity is required to review the complaint to determine whether it has jurisdiction under section 504. If the agency does not have jurisdiction, it must determine whether it is the designated agency responsible for complaints filed against that public entity. If the agency does not have jurisdiction under section 504 and is not the designated agency, it must refer the complaint to the Department of Justice. The Department of Justice then must refer the complaint to the appropriate agency.

(5) An estimate of the total number of respondents and the amount of time estimated for an average respondent to respond: 5,000 respondents per year at 0.75 hours per complaint form.

(6) An estimate of the total public burden (in hours) associated with the collection: 3,750 hours annual burden.

If additional information is required contact: Mr. Robert B. Briggs, Clearance Officer, United States Department of Justice, Information Management and Security Staff, Justice Management Division, Suite 850, Washington Center, 1001 G Street, NW., Washington, DC 20530.

Dated: September 9, 1997.

Robert B. Briggs,

Department Clearance Officer.

[FR Doc. 97–24328 Filed 9–12–97; 8:45 am]

BILLING CODE 4410–13–M

DEPARTMENT OF JUSTICE

[AG Order No. 2115–97]

Request for Comments on the Attorney General's Specification of Community Programs Necessary for the Protection of Life or Safety Under the Welfare Reform Act

AGENCY: Department of Justice.

ACTION: Notice with request for comments.

SUMMARY: The Personal Responsibility and Work Opportunity Reconciliation Act of 1996 vests in the Attorney General the authority to specify non-means-tested, government-funded community programs, services, or assistance that are necessary for the protection of life or safety and for which all aliens remain eligible. On August 23, 1996, the Attorney General issued an Order implementing that authority, and making a ''provisional specification.'' Before the provisional specification is finalized, the Department is publishing this Notice to solicit the input of federal, state, and local agencies operating programs or providing services or assistance that may be covered by that Order.

DATES: Comments must be received by November 14, 1997.

ADDRESSES: Address all comments to Wendy L. Patten, Counsel, Office of Policy Development, Department of Justice, 950 Pennsylvania Avenue, NW., Washington, DC, 20530.

FOR FURTHER INFORMATION CONTACT: Wendy L. Patten, Counsel, Office of Policy Development, Department of Justice, 950 Pennsylvania Avenue, NW., Washington, DC, 20530, (202) 514–5482.

SUPPLEMENTARY INFORMATION: On August 22, 1996, the President signed the Personal Responsibility and Work Opportunity Reconciliation Act of 1996 (the Act), which vests in the Attorney General the authority to specify non-means-tested, government-funded community programs, services, or assistance that are necessary for the protection of life or safety and for which all aliens remain eligible. Pursuant to the Act, on August 23, 1996, the Attorney General issued an Order (AG Order No. 2049–96) (Order) implementing that authority, and making a ''provisional specification'' of such programs. This Order was published on August 30, 1996 at 61 FR 45985.

Under §§ 401 and 411 of the Act, aliens who are not ''qualified aliens'' (as defined in § 431 of the Act are ineligible for federal, state, and local public benefits.[1] However, there are a number of specified exceptions to these restrictions.[2] Included within this list of

[1] The term ''federal public benefit'' is defined to include ''any grant, contract, loan, professional license, or commercial license provided by an agency of the United States or by appropriated funds of the United States.'' (Section 401(c)(1)(A)). The definition of state public benefit is identical to the federal benefit definition except that it refers to benefits provided by agencies of state or local governments or by appropriated funds of state or local governments. (Section 411(c)(1)(A)).

[2] In addition to the exception that is the subject of the Attorney General Order of August 23, 1996, there are a number of other categories of federal, state, and local public benefits that Congress expressly made available to other non-qualified aliens. These public benefits include specified types of emergency medical treatment and emergency disaster relief, along with other benefits

statutory exceptions is a provision authorizing the Attorney General to establish additional exceptions for certain types of programs, services, and assistance. The programs, services, and assistance that the Attorney General may specify are limited to those which (1) deliver in-kind services at the community level, including through public or private nonprofit agencies; (2) do not condition the provision of assistance, the amount of assistance provided, or the cost of assistance provided on the individual recipient's income or resources; and (3) are necessary for the protection of life or safety. (Sections 401(b)(1)(D) and 411(b)(4).

The Department intends to publish an Order finalizing the implementation of that authority. Before it does so, the Department is publishing this Notice to solicit the input of federal, state, and local agencies operating programs or providing services or assistance that may be covered by the final Order. Responses to this solicitation will assist the Department in reaching a final determination regarding the types of programs, services, or assistance that should be covered by that Order. After reviewing any comments and consulting with other agencies, the Attorney General then will issue a final specification of programs, services, and assistance for which all persons remain eligible, regardless of immigration status.

If you believe that any program or programs you administer have been or may be affected by the Attorney General Order, the Department would appreciate receiving your comments. In your comments, please give the citations of any applicable federal, state, or local statutes or regulations that govern the creation, operation, or scope of your affected programs. Please also give a brief description of the structure of the program(s), your agency's view of whether the program, service, or assistance falls within the purview of the Attorney General Order, and any arguments to support that interpretation.

Dated: September 9, 1997.

Janet Reno,

Attorney General.

[FR Doc. 97–24272 Filed 9–12–97; 8:45 am]

BILLING CODE 4410–BB–M

as set forth in § 401(b) and § 411(b) of the Act, as amended by the Balanced Budget Act of 1997, Pub. L. No. 105–33 (1997).

DEPARTMENT OF JUSTICE

Immigration and Naturalization Service

[INS No. 1872–97]

Pilot Programs for Employment Eligibility Confirmation

AGENCY: Immigration and Naturalization Service, Justice.

ACTION: Notice.

SUMMARY: This notice prescribes guidelines under which employers may elect to participate in one or more of three pilot programs for employment eligibility confirmation to be conducted by the Immigration and Naturalization Service (Service) with the involvement of the Social Security Administration (SSA). This notice also requests comments from employers and other interested parties on the pilots. The Commissioner of the Service invites employers in states where the three pilot programs for employment eligibility confirmation will be conducted to contact the Service to elect to participate in one or more of them. The pilot programs build on the experience of the Service and SSA over the last 5 years in developing and operating employment verification pilot programs with the goal of enabling participating employers to verify their newly hired employees' work eligibility quickly, easily, and accurately.

DATES: There is no deadline for submission of election forms to participate in an employment verification pilot program(s), but interested employers should send their completed election forms to the Service as soon as possible to maximize their opportunity to participate.

ADDRESSES: Please submit your election forms, requests for information and any comments you may have on the pilot programs to the Immigration and Naturalization Service, 425 I Street, NW., ULLICO Building, 4th Floor, Washington, DC 20536, Attention: SAVE Program Branch—Election Forms and/or Comments.

FOR FURTHER INFORMATION CONTACT: John E. Nahan, Immigration and Naturalization Service, SAVE Program, 425 I Street, NW., ULLICO Building, 4th Floor, Washington, DC 20536, telephone (202) 514–2317.

SUPPLEMENTARY INFORMATION:

I. Statutory Authority

Title IV, Subtitle A of the Illegal Immigration Reform and Immigrant Responsibility Act of 1996 (IIRIRA), Pub. L. 104–208, 110 Stat. 3009, enacted on September 30, 1996, provides that all United States employers, subject to eligibility for participation, geographical limitations, and limitations of available Service and SSA resources, may elect to participate in one or more of three employment verification pilot programs to be conducted by the Service. The three pilot programs are: (1) the Basic Pilot; (2) the Citizen Attestation Pilot; and (3) the Machine-Readable Document Pilot.

II. Purpose

The purpose of these pilot programs is to implement IIRIRA's mandate to test three methods of providing an effective, nondiscriminatory work eligibility verification procedure focusing on electronic verification. Through an automated confirmation system, employers will match information provided by employees on the Form I–9, Employment Eligibility Verification, against existing information contained in SSA's or the Service's databases to confirm that an individual is eligible to work.

III. General Description of the Pilot Programs for Employment Eligibility Confirmation

The IIRIRA requires the Service to conduct three distinct pilot programs, each of which can last no longer than 4 years, unless otherwise directed by Congress. The programs include: (1) the Basic Pilot; (2) the Citizen Attestation Pilot; and (3) the Machine-Readable Document Pilot. Participation in the pilots will be voluntary on the part of employers, except with regard to the executive and legislative branches of the Federal Government and certain employers found to be in violation of sections 274A(e)(4) or 274B(g) of the Immigration and Nationality Act (Act), 8 U.S.C. 1101 et seq., in states where the pilots are being conducted. Although the decision for an employer to participate is voluntary, verification may not be selective; all employees subject to verification under the terms of a pilot program must be verified by an employer participating in that pilot.

A. Mandatory Elections

1. Federal Government Participation

Certain Federal Government entities are required by Section 402(e) of IIRIRA to elect to participate in at least one of the three pilot programs. The Secretary of each department of the executive branch is required to make an election of one or more of the pilot programs, but may limit the election to hiring in those states or geographic areas covered by the pilot(s) selected, and to specified divisions within the department, as long

as all hiring by such divisions and in such locations is covered. In the legislative branch, each Member of Congress, each officer of Congress, and the head of each agency of the legislative branch that conducts hiring in a state in which a pilot program will operate must participate in at lest one pilot programs. Governmental entities required to participate in a pilot program must return the election form to the Service. The Service's acceptance of elections by employers required to make elections is subject to the constraints of available resources and the pilot eligibility requirements.

2. Violators of the Act

Orders finding employers liable under sections 274A(e)(4) or 274B(g) of the Act for knowingly employing unauthorized aliens, or under section 274B(g) of the Act for unfair immigration-related employment practices, may require the subject of the order to participate in a pilot program with respect to hiring, recruitment, or referral of individuals in a state covered by such a program. This provision will be the subject of forthcoming regulations or other necessary implementing action by the authorities responsible for issuing such orders. Persons or entities subject to such orders should not return the election form to the Service, unless they desire to participate voluntarily in a pilot program.

Persons or entities required to participate in a pilot program who fail to comply with the requirements of the pilot program, with respect to an individual, are subject to civil penalties under section 274A of the Act.

B. Confirmation System Requirements

Section 404(d) of IIRIRA requires that the confirmation system to be established to service employers participating in the three pilot programs be designed and operated to:

(1) maximize reliability and ease of use, consistent with protecting the privacy and security of the underlying information;

(2) respond to all appropriate inquiries and to register times when such inquiries are not received;

(3) include appropriate safeguards to prevent unauthorized disclosure of personal information; and

(4) have reasonable safeguards against the system's resulting in lawful discriminatory practices based on national origin or citizenship status, including the selective or unauthorized use of the system to verify eligibility, the use of the system prior to an offer of employment, and the exclusion of certain individuals from consideration for employment as a result of a perceived likelihood that additional verification will be necessary, beyond what is required for most job applicants.

All the pilots will have a number of features and safeguards in common to meet these requirements. The confirmation system will contain safeguards designed to protect the integrity of personal information contained in SSA and Service databases, including passwords, access codes, and user identification numbers. The information provided through the confirmation system will be limited only to that necessary to satisfy the employer's need to verify work eligibility. Necessary manuals and training material will be provided to employers. The Service will designate one or more individuals in each Service district office covering an area in which a pilot program is being implemented to assist the public, as well as provide information and assistance from the Service's SAVE Program in Washington, DC.

C. Memorandum of Understanding (MOU)

No employment eligibility confirmation information will be exchanged between the employer and the Service or SSA under a pilot program unless and until the employer has entered into an MOU with the Service and SSA (if applicable), stating in detail the terms and conditions applicable to that pilot. The MOUs for each pilot will contain appropriate undertakings on the part of the employer regarding its responsibilities under the pilot including, but not limited to, the following:

(1) the employer agrees that it will not initiate any verification procedure until after the employee has been hired and the Form I–9 has been completed;

(2) the employer agrees that it will verify all new employees subject to verification under the terms of the pilot;

(3) the employer agrees to display prominently appropriate notices to inform employees and prospective employees about its participation in the pilot and to provide anti-discrimination information; and

(4) the employer agrees not to take any adverse action against an employee based upon his or her employment eligibility status while SSA or the Service is processing a verification request, unless the employer obtains knowledge that the employee is unauthorized;

(5) the employer agrees to provide access to its employment records to the Service and SSA, and its agents or designees for the purpose of pilot evaluation; and

(6) the employer agrees that the information provided to it through the confirmation system will be used to supplement and confirm the Form I–9 verification of identity and work authorization of newly hired employees, and not for any other purpose.

Violation of these conditions will be grounds for immediate termination of the employer's participation in the pilot, and for appropriate legal action. In particular, information received by the Service or SSA in the course of the pilot indicating that the employer has engaged in unlawful immigration-related employment practices will be referred to the Special Counsel for Immigration-Related Unfair Employment Practices within the Civil Rights Division of the Department of Justice.

Except as otherwise specifically designated by IIRIRA, all legal obligations pertaining to employment verification and to the obtaining and use of SSA or other Federal Government information, including anti-discrimination protections, will continue to apply to pilot program participants. Section 403(d) of IIRIRA states that no person or entity participating in a pilot program shall be civilly or criminally liable under any law for any action taken in good faith reliance on information provided through the confirmation system.

Under section 402(b) of IIRIRA, an employer participating in any of the three pilot programs obtains the benefit of a rebuttable presumption that it has not violated section 274A(1)(A) of the Act—which provides civil penalties for knowingly employing an unauthorized alien—with respect to the hiring of any individual if it obtains confirmation of the identity and employment eligibility of the individual in compliance with the terms and conditions of the pilot program.

D. Unfair Immigration-Related Employment Practices

An employer participating in any of the pilots agrees not to discriminate unlawfully against any individual in hiring, firing, or recruitment practices because of his or her national origin or, in the case of a protected individual, as defined in section 274B(a)(3) of the Act, because of his or her citizenship status. Such illegal practices can include discharging or refusing to hire eligible employees because of their foreign appearance or language. An employer also violates the anti-discrimination provision if it requests more or different documents than are required under

section 274B of the Act, or refuses to honor documents that on their face reasonably appear to be genuine, if done with the purpose or with the intent of discriminating against an individual because of his or her citizenship or national origin. Violation of the unfair immigration-related practices provisions of the Act could subject an employer to civil penalties pursuant to section 274B of the Act.

E. Evaluation of Pilot Programs

Section 405 of IIRIRA requires that the Service report to Congress on the Basic Pilot, the Citizen Attestation Pilot, and the Machine-Readable Pilot programs and make recommendations on whether they should be continued or modified. To assist in evaluating the pilots and developing these reports, the Service or auditors contracted by the Service may contact participating employers to review work records created during the pilot(s), and to solicit their views and the views of their employees concerning these pilot programs.

F. Equipment Requirements

The Service and SSA will provide the verification services contemplated by the employment verification pilot programs at no cost to employers, but employers will be responsible for providing the equipment needed to make inquiries. Equipment needed for participation in the Basic Pilot and the Machine-Readable Document Pilot includes a personal computer with a modem, and a touch-tone telephone (and modem, if the same device) on a phone line which results in only one phone number being recognized as the originating phone number, regardless of whether it is controlled through a switch, private branch exchange, or direct outward dialing—this line should be an analog voice grade line. Equipment required for the Citizen Attestation Pilot is a personal computer and a modem. For the Machine-Readable Document Pilot, a machine to read the machine-readable documents will be necessary in addition to the Basic Pilot equipment. No decision has been made yet as to exactly what machine will be used for the Machine-Readable Document Pilot, or as to whether employers will be responsible for providing it. The requirements for the Machine-Readable Document Pilot will be defined in a separate Memorandum of Understanding (MOU) between the Service, SSA, and the participating employer.

IV. Basic Pilot

The Basic Pilot requires participating employers to verify employment authorization for all new employees, regardless of citizenship. The IIRIA mandates that the Basic Pilot be offered to employers in at least five of the seven states with the highest estimated population of aliens who are not lawfully present in the United States. The Service has estimated the population of aliens who are not lawfully present in the United States to be highest in the states of California, Texas, New York, Florida, and Illinois, and is soliciting elections to participate from employers in those five states.

A. Changes to Form I–9 Procedures for the Basic Pilot

Unlike Service employment verification pilots to date, the Basic Pilot involves changes to Form I–9 employment verification procedures. Except as specifically provided, however, all employment eligibility verification requirements generally applicable to employers apply equally to pilot participants. The only specific change to document examination procedures for employers participating in the Basic Pilot will be that ''List B'' identity documents without a photograph will not be acceptable, for the following reasons:

(1) Documents referred to in section 274A(b)(1)(B)(ii) of the Act must be designated by the Service as suitable for the purpose of identification in a pilot program. The documents referred to by this statutory citation include all Form I–9 ''List A'' documents acceptable for both identity and employment eligibility under 8 CFR 274a.2(b)(1)(A), except for the U.S. Passport (expired or unexpired). The Service hereby designates all Form I–9 ''List A'' documents, identified by current Service regulations, as suitable for the purpose of identification in a pilot program. The U.S. Passport (expired or unexpired) is also suitable for the purpose of identification in a pilot program as a statutory Form I–9 ''List A'' document, without the need for specific designation by the Service. As a result of this designation of suitable documents, employment verification procedures involving ''List A'' documents, showing both identity and employment eligibility, will remain unchanged for participants in the Basic Pilot, and for participants in the Citizen Attestation and Machine-Readable Document pilots, to the extent that those pilots adopt Basic Pilot procedures;

(2) The IIRIRA requires that a document referred to in section 274A(b)(1)(D) of the Act contain a photograph of the individual. This statutory citation refers to Form I–9 ''List B'' documents that establish identity only under 8 CFR 274a.2(b)(1)(B). ''List B'' documents do not necessarily include photographs. However, only ''List B'' documents with photographs may be accepted for purposes of identity verification by employers participating in the Basic Pilot, or in the Citizens Attestation or Machine-Readable Document pilots, to the extent that those two pilots adopt Basic Pilot procedures. The Service does not anticipate issuing a new version of the Form I–9 specifically for employment verification pilot participants;

(3) The IIRIRA states that the employer has complied with the employment eligibility verification requirements of section 274A(b)(1) of the Act with respect to examination of a document if the document reasonably appears on its face to be genuine and to pertain to the individual whose identity and work eligibility is being confirmed. This provision does not alter, for pilot program purposes, the standards for document examination applicable to all U.S. employers under sections 274A(b)(1) and 274B(a)(6) of the Act; and

(4) The IIRIRA provides that if the Service finds that a pilot program would reliably determine, with respect to an individual, whether the person with the identify claimed by the individual is authorized to work in the United States, and whether the individual is claiming the identity of another person, it may waive the requirement that a Form I–9 ''List C'' employment eligibility document also be presented if the employee presents a List B identity document rather than a ''List A'' identity and employment eligibility document. The pilot programs are designed to make reliable determinations of work eligibility, and the Service will consider as they proceed whether waiving the ''List C'' requirement is appropriate. Any such determination prior to implementation of the pilot programs, however, would be premature.

B. Basic Pilot Verification Procedures

The Basic Pilot involves separate verification checks (if necessary) of the SSA and Service databases, using automated systems to verify Social Security account numbers (SSNs) and alien registration numbers. The verification procedures will be initiated after the employee has been hired and the Form I–9 completed. Employers must verify all newly hired employees

without exception, and must make verification inquiries within 3 days of the hiring (unless the automated system to be queried is temporarily unavailable, in which case the time period is extended to accommodate employers attempting, in good faith, to make inquiries during the period of unavailability).

In all cases, the verification inquiry will go first to SSA. If necessary, the SSA response will instruct employers to use the Service's automated verification procedures. The automated verification procedures are designed to verify the employee's work eligibility within 3 work days of the initial call to SSA. If the automated procedures do not result in verification, a ''tentative nonconfirmation'' will result. In that case, the employer will inquire of the employee whether he or she wishes to contest the tentative nonconfirmation. If so, the employee will be referred to secondary verification, which will require him or her to contact or visit an SSA or Service office, as appropriate, within 8 Federal Government work days of being notified by the employer of the tentative nonconfirmation.

A tentative nonconfirmation received from either SSA or the Service does not mean that the employee is not authorized to work, and employers may not interpret it as such. There are many reasons why a work-authorized individual may be the subject of a tentative nonconfirmation, including mistakes on the Form I–9 by either the employer or the employee, inaccurate data entry by the employer, legal change of the employee's name, or erroneous, incomplete, or outdated Government records. Although it does not mean that the employee is not work-authorized, a tentative nonconfirmation means that a work-authorized employee must, without fail, take advantage of his or her secondary verification opportunity to correct the situation if he or she wishes to continue employment.

SSA Verification—the Automated System

After completing the Form I–9, the employer will access the SSA database using a touch-tone telephone to input the employee's name, SSN, and date of birth, as recorded on the Form I–9. If the data input by the employer matches the SSA database and shows the employee to be work-authorized, the employer will receive a confirmation of employment eligibility. If the information does not match SSA records, or if the employment eligibility of the employee is not confirmed, the employer will receive further instructions. In some cases, the employer will be instructed to initiate the Service verification procedures. In other cases, the SSA response shall constitute a tentative nonconfirmation. The employer will record appropriate transaction codes received from SSA on a verification transaction record form. Social Security personal earnings account information will not be accessible to the employer through the SSA verification process.

a. SSA Secondary Verification

If the employer receives a tentative nonconfirmation of an employee from SSA, the employer must notify the employee and determine whether or not the employee will contest the tentative nonconfirmation. If the employee does not contest the tentative nonconfirmation, it will be considered a final nonconfirmation. If the employee contests the tentative nonconfirmation, he or she must visit an SSA field office within 8 Federal Government work days to resolve any discrepancy in SSA records, including updating the database if appropriate. The SSA and the Service have 10 Federal Government work days within which to respond to contested tentative nonconfirmation cases. During this period, the employer may not terminate or take adverse against the employee based upon his or her employment eligibility status. At the expiration of the 8-day period, the employer will make another telephone inquiry of the SSA database, which will result in confirmation, a second and final nonconfirmation, or additional verification instructions.

2. Service Verification—the Automated System

The Service's automated verification will take place only as may be directed by the SSA verification response. Participating employers access the Service database using personal computers with a modem. To conduct an initial query of the Service database, the employer keys in certain information from the employee's Form I–9. The Service database will respond within seconds either by confirming work authorization, or by requiring more information relating to Form I–9 employment eligibility documentation in order to permit the Service to conduct further searches of its records. The result of the further searches will be available through the automated system within 3 Federal Government work days. If the Service is unable to confirm work authorization based upon the automated process, a tentative nonconfirmation results.

a. Service Secondary Verification

An employee who is the subject of a tentative nonconfirmation after completion of an automated Service verification check is provided a secondary verification opportunity to verify his or her employment status. In these cases, the employer must notify the employee of the tentative nonconfirmation and determine whether or not he or she will contest the tentative nonconfirmation. If the employee does not contest the tentative nonconfirmation, it will be considered a final nonconfirmation. If the employee contests the tentative nonconfirmation, he or she must contact the Service within 8 Federal Government work days for resolution of his or her case. The employer will instruct the employee to call a Service toll-free telephone number or visit a local Service office within that time period. The SSA and the Service have 10 Federal Government work days within which to respond to contested tentative nonconfirmation cases. During this period, the employer may not terminate or take adverse action against the employee based upon his or her employment eligibility status, unless the Service determines, within that time, that the employee is not work-authorized.

Within or at the conclusion of the 10-day period for secondary verification, an employer will receive one of the following messages via the electronic confirmation system concerning the employee's work eligibility: (1) if the employee contacts the Service and verifies his or her employment eligibility, the employer will receive an ''employment-authorized'' confirmation; (2) if the employee contacts the Service but the Service determines that the employee is not work-authorized, the employer will receive an ''unauthorized'' response (final nonconfirmation); (3) if the employee does not contact the Service to resolve his or her case, the employer will receive a ''no show'' response, which shall also constitute a final nonconfirmation for purposes of the pilot; or (4) if in some cases the Service needs more than 10 work days to resolve a case, the employer will receive a ''case in continuance'' response, and the employee should continue to work until a definitive answer is received from the Service. If necessary, based on the secondary verification contact, the Service database will be updated. The employer will record appropriate verification codes received from the Service, either by printing the verification screen and attaching it to

the Form I–9, or recording the verification code on the Form I–9.

3. Consequences of Final Nonconfirmation

An employer receiving a final nonconfirmation from SSA or the Service with regard to an employee may terminate the employee, and shall not be civilly or criminally liable under any law for the termination, as long as the action was taken in good faith reliance on information provided through the confirmation system. If the employer does not terminate an employee after final nonconfirmation, the employer must notify the Service. If the employer fails to notify the Service of continued employment after receiving final nonconfirmation, the failure is deemed a violation of section 274A(a)(1)(B) of the Act for failure to comply with proper hiring procedures, and the employer may be assessed a civil monetary penalty of between $500 and $1,000. An employer continuing to employ an individual after receiving a final nonconfirmation also could be subject to legal penalties under section 274A(a)(1) of the Act. Section 403(a)(4)(C)(iii) of IIRIRA establishes a rebuttable presumption that an employer who continues to employ an individual after receiving final nonconfirmation has knowingly employed an unauthorized alien.

V. The Citizen Attestation Pilot

The Citizen Attestation Pilot provides different verification procedures depending on whether or not the employee attests on the Form I–9 that he or she is a U.S. citizen or national. Except as specified in section 403(b) of IIRIRA, the Citizen Attestation Pilot is the same as the Basic Pilot. The Citizen Attestation Pilot is required to operate in at least five states, or, if fewer, all of the states in which each driver's license and identification card contains a photograph of the individual, and which have been determined by the Attorney General to have sufficient application and issuance procedures to make their driver's licenses and identification cards resistant to counterfeiting, tampering, and fraudulent use.

Section 656(b) of IIRIRA directed the Department of Transportation (DOT) to promulgate regulations regarding issuance procedures for state-issued driver's licenses and identification cards, and the acceptable secure format for such licenses and cards. As the Citizen Attestation Pilot progresses, and once the DOT regulations are promulgated, the Service will make further determinations based on those regulations whether actual or prospective Citizen Attestation Pilot states meet DOT requirements. At present, the Service has not made any determination that any state's procedures are inadequate for participation in the pilot. In order to implement IIRIRA's directive to begin the Citizen Attestation Pilot, and to give as many employers as possible the opportunity to express interest in participating in a pilot, the Service is soliciting elections for the Citizen Attestation Pilot from employers in all states. Based on further determinations as to licensing procedures in states with sufficient employer interest, the Service will decide which states will be the initial sites for the Citizen Attestation Pilot.

A. Changes to Form I–9 Procedures for the Citizen Attestation Pilot

As in the Basic Pilot, the Service designates all Form I–9 ''List A'' documents identified by current Service regulations at 8 CFR 274a(2)(b)(1)(A) as suitable for purposes of identification of employees (regardless of citizenship) for the Citizen Attestation Pilot. Also, only ''List B'' identity documents with photographs may be accepted from any employee by employers participating in the Citizen Attestation Pilot. In all other respects, the Form I–9 procedures for employees who do not attest on the Form I–9 that they are U.S. citizens or nationals are the same as those applicable to all U.S. employers under section 274A of the Act.

The Form I–9 procedures applicable to employers participating in the Citizen Attestation Pilot in the case of employees attesting to U.S. citizenship or nationality in section 1 of the Form I–9 are, however, quite different. The only ''List A'' document that an employer may accept from such an employee is a U.S. passport (expired or unexpired). If the U.S. citizen or national employee presents a ''List B'' identity document, it must contain a photograph. United States citizen or national employees are not required to present a social security card or other ''List C'' document evidencing employment authorization in addition to a ''List B'' identity document with photograph.

1. Waiver of Document Presentation Requirement

For a subset of employers within the Citizen Attestation Pilot (fewer than 1,000 employers to be selected at the discretion of the Service), employees who attest to U.S. citizenship or nationality on the Form I–9 do not have to produce any documentation at all. In those cases, only section 1 of the Form I–9 will be completed. Normal retention and inspection requirements will continue to apply to such Forms I–9, as they do to all Forms I–9 completed by participants in any pilot program.

B. Citizen Attestation Pilot Automated Verification Procedures

In the case of employees attesting to U.S. citizenship or nationality on the Form I–9 as described above, no further verification will take place. For alien employees, the process will be identical to the ''Service Verification'' procedures described for the Basic Pilot. The Citizen Attestation Pilot will not use SSA verification procedures.

VI. The Machine-Readable Document Pilot

The Machine-Readable Document Pilot is identical to the Basic Pilot in all respects, and the above discussion of the Basic Pilot applies to it in full, except for the geographic scope of the pilot and for one additional feature. If an employee subject to employment eligibility verification presents a driver's license or identification card containing a machine-readable SSN issued by the state in which the pilot program is being conducted, the employer will make an inquiry to SSA through the confirmation system by using the machine-readable feature. Integrating the machine-readable feature with the SSA database presents particular technical challenges. As a result, employers electing to participate in the Machine-Readable Document Pilot, and selected for participation in it, may be offered the otherwise identical Basic Pilot before the machine-readable feature is available, with later phase-in of that feature.

The Machine-Readable Document Pilot is required to operate in at least five states or, if fewer, all of the states that include a machine-readable SSN on their driver's licenses and identification cards. The Service has determined for the purposes of the Machine-Readable Document Pilot that the state of Iowa includes machine-readable SSNs on some or all of its driver's licenses and identification cards. Employers in that state may elect to participate in this pilot.

VII. Eligibility for Participation in the Pilot Programs

A. General Criteria

Subject to the specific limitations for each pilot, and to the constraints of available resources, any person or entity that conducts any hiring, or any recruiting or referral for a fee subject to

section 274A(a)(1)(B)(ii) of the Act, in a state in which a pilot program will operate, may elect to participate in the pilot. In other words, any employer or other entity subject to the employment eligibility verification requirements of section 274(a)(1) of the Act is eligible. ''State'' includes the District of Columbia, Puerto Rico, Guam, and the Virgin Islands of the United States in addition to the 50 states. All participants must be willing to sign and comply with the MOU for their respective pilot, which will contain more specific terms and conditions of the pilot. The participation of any employer in any pilot may be terminated by the Service because the employer has substantially failed to comply with its obligations under the pilot program.

Employers electing to participate in a pilot program may request that their election apply to all their hiring in each of the states in which the pilot will take place, or that it be limited to its hiring in one or more applicable states, or to one or more places of hiring within a state. The Service will endeavor to honor employers' preferences to the extent available resources and pilot availability permits. Multi-site employers may elect more than one pilot if they hire employees in at least one location within the geographic area covered by each pilot elected. However, each hiring location may only participate in one pilot, any preference may be given to employers not otherwise able to participate in a pilot over those who wish to participate in more than one pilot.

Section 402 of IIRIRA permits the Service to provide for employers' elections to extend to states to which the pilot programs are not operating, but in which the employer hires. The Service will determine when it is feasible to provide for such extensions outside pilot states based on employer demand and available resources.

1. Basic Pilot Eligibility

Employers in California, Texas, New York, Florida, and Illinois may elect to participate in the Basic Pilot. The Service has estimated that these states have the highest population of aliens who are not lawfully present in the United States. At present, the SSA verification system can service no more than approximately 2,000 employers. As a result, initial demand for the Basic Pilot may substantially exceed availability.

2. Citizen Attestation Pilot Eligibility

Employers in all states (including the District of Columbia, Puerto Rico, Guam, and the Virgin Islands of the United States) may elect to participate in the Citizen Attestation Pilot, but the Service reserves the right to limit the pilot to certain states based on the level of employer interest and on further determinations as to state licensing procedures. The Service may restrict the number of employers that may participate in the Citizen Attestation Pilot in order to produce a representative sample of employers and to reduce the potential impact of fraud, as well as limitations based on available resources that may apply to any or all of the pilots. The number of employers participating in the Citizen Attestation Pilot for whom document presentation requirements are waived under section 403(b)(4) of IIRIRA may be further restricted in order to provide a representative sample of employers, and in no event will exceed 1,000 employers.

3. Machine-Readable Document Pilot Eligibility

Employers in Iowa may elect to participate in the Machine-Readable Document Pilot. The Service has determined that Iowa issues driver's licenses and similar identification documents containing a machine-readable SSN. As the Machine-Readable Document Pilot uses the same SSA system limited at present to no more than approximately 2,000 employers as the Basic Pilot, initial availability of this pilot will also be very limited.

VIII. Project Restrictions

The Service may limit participation in any or all of the three pilots by rejecting employers' elections, or by limiting their applicability to certain states or places of hiring based on its determination that there are insufficient resources available to provide appropriate services under the pilot program to the employer. The lifespan of each pilot program is limited to 4 years, beginning on the first day the pilot is in effect.

IX. Request for Comments

Section 402(d) of IIRIRA mandates consultation with representatives of employers (and recruiters and referrers) in the development and implementation of the pilot programs. The details of these pilot programs are still being developed, and are subject to refinement and modification in the course of implementation. The Service encourages all interested parties, including but not limited to representatives of employers (and recruiters and referrers), to participate in this process by providing written comments to the Service in response to this notice regarding any aspect of the IIRIRA-mandated employment eligibility confirmation pilot programs. Comments should be mailed to the Immigration and Naturalization Service, 425 I Street, NW., ULLICO—4th Floor, Washington, DC 20536, Attention: SAVE Program, Pilot Comments.

X. OMB Reporting Burden

The information collection requirement (Form I–876) has been approved by the Office of Management and Budget provisions of the Paperwork Reduction Act. The OMB control number for this information collection is 1115–0217.

Dated: September 9, 1997.

Doris Meissner,

Commissioner, Immigration and Naturalization Service.

Note: The Form I–876 is provided as an attachment to this notice can be reproduced.

BILLING CODE 4410–10–M

OMB NO. 1115-0217 Expires 11/30/97

U. S. Department of Justice
Immigration and Naturalization Service

Election Form To Participate in Employment Eligibility Confirmation Pilot Programs

Which pilot program(s) do you elect?

A. ☐ The Basic Pilot
You may elect the **Basic Pilot** only if you are located in **California, Texas, New York, Florida, and Illinois.**

B. ☐ The Citizen Attestation Pilot

Employers in all states (including the District of Columbia, Puerto Rico, Guam, and the Virgin Islands of the U.S.), may elect to participate in the Citizen Attestation Pilot, but the INS reserves the right to limit the pilot to certain states based on the level of employer interest and on further determinations as to state licensing procedures.

C. ☐ The Machine-Readable Document Pilot

You may elect the **Machine-Readable Document Pilot** only if you are located in **Iowa.**

Employer name: _____

Employer address: _____

_____

County in which employer resides: _____

If you hire at locations other than the above address, please list all the locations you want to participate in the pilot(s). (Attach additional sheet(s) if necessary). _____

_____

_____

(**Please Note:** The Service will determine when it is feasible to provide for extensions outside Pilot states based on available resources).

Employer Identification Number: _____

Standard Industry Code (if known): _____

Person(s) to be contacted concerning employment verification pilot: _____

Telephone number(s): _____

For the Basic Pilot or the Machine-Readable Document Pilot, for each site from which verification will take place, provide the site phone number: _____

Number of company employees: _____

Are you a federal executive branch employer?: _____

Are you a federal legislative branch employer?: _____

Do you wish to be considered for a waiver of the document presentation requirement for your U.S. citizen or national employees? _____

(**Note:** This question is to be answered only by employers electing **the Citizen Attestation Pilot.**)

Form I-876 (09/09/97)

OMB NO. 1115-0217 Expires 11/30/97

U. S. Department of Justice
Immigration and Naturalization Service

Election Form To Participate in Employment Eligibility Confirmation Pilot Programs

INSTRUCTIONS

PLEASE READ ALL INSTRUCTIONS CAREFULLY BEFORE COMPLETING THIS FORM.

Title IV, Subtitle A of the Illegal Immigration Reform and Immigrant Responsibility Act of 1996, Pub. L. 104-208, 110 Stat. 3009 (IIRIRA), requires the Immigration and Naturalization Service (INS), in cooperation with the Social Security Administration (SSA) to conduct three pilot programs of employment eligibility confirmation: 1) the **Basic Pilot**; 2) the **Citizen Attestation Pilot**; and 3) the **Machine-Readable Document Pilot**. Participation in the pilot programs is voluntary on the part of employers, except with regard to the executive and legislative branches of the federal government and certain employers found to be in violation of sections 274A or 274B of the Immigration and Nationality Act (INA), in states where the pilot(s) are being conducted.

No fee will be charged for participating in the pilots, but employers will be responsible for providing the equipment needed to make inquiries. Equipment needed for participation in the Basic and Machine-Readable Pilots includes a personal computer with a modem, and a touch-tone telephone (and modem, if the same device) on a telephone line which results in only one phone number being recognized as the originating phone number, regardless of whether it is controlled through a switch, private branch exchange, or direct outward dialing (this should be an analog voice grade line). Equipment required for the Citizen Attestation Pilot is a personal computer with a modem. Additional equipment may be needed for the Machine-Readable Document Pilot. The INS may limit employer participation due to limited resources.

This document is your election to participate in employment verification pilots being conducted by the INS and the SSA. Its purpose is to identify the level of employer interest in the three pilots in order to assist the INS in implementing the pilots in the most advantageous way based on available resources. **Although you must complete and return this election form if you wish to be considered for participation in a pilot, returning the form neither obligates you to participate in any pilot nor obligates the INS to select you for participation.** Employers selected to participate in a pilot must execute a Memorandum of Understanding (MOU) with the INS and SSA (if applicable), that will provide the specific terms and conditions governing that pilot.

If you are a U.S. employer (or recruiter or referrer for a fee) who is subject to the employment eligibility verification requirements of section 274A of the INA, and you wish to be considered, please complete Form I-876 (Election Form) and mail to the U.S. Immigration and Naturalization Service, SAVE Program, 425 I Street, NW, ULLICO, 4th Floor, Washington, DC 20536. You may also fax this form to the SAVE Program at (202) 514-9981. You will be contacted by an INS representative concerning your participation in an employment verification pilot program.

Privacy Act Notice. The authority for collecting this information is the Immigration and Nationality Act, as amended by the Illegal Immigration Reform and Immigrant Responsibility Act of 1996 (IIRIRA), Pub. L. 104-208, 110 Stat. 3009. This information will be used to identify the level of employer interest in the three Employment Eligibility Confirmation Pilot Programs; the Basic Pilot, the Citizen Attestation Pilot, and the Machine-Readable Document Pilot. These pilot programs mandated by IIRIRA are to test three methods of providing an effective, non-discriminatory work eligibility verification procedure focusing on electronic verification. The information collected will assist the Immigration and Naturalization Service and the Social Security Administration in implementing the pilots in the most advantageous way based on available resources.

Reporting Burden. We try to create forms and instructions that are accurate, can be easily understood, and which impose the least possible burden on you to provide us with information. Often this is difficult because some immigration laws are very complex. Accordingly, the reporting burden for this collection of information is computed as follows: 1) learning about this form, 60 minutes; 2) completing the form, 15 minutes; and 3) assembling and filing (recordkeeping) the form, 15 minutes, for an average of 90 minutes per response. If you have comments regarding the accuracy of this burden estimate, or suggestions for making this form simpler, you can write to the Immigration and Naturalization Service, 425 I Street, N.W., Room 5307, Washington, D.C. 20536.

[FR Doc. 97–24422 Filed 9–12–97; 8:45 am]
BILLING CODE 4410–10–C

DEPARTMENT OF LABOR

Occupational Safety and Health Administration

National Advisory Committee on Occupational Safety and Health (NACOSH); Notice of Open Meeting

AGENCY: Occupational Safety and Health Administration (OSHA), Labor.

ACTION: Notice of open meeting.

SUMMARY: The Occupational Safety and Health Administration announces an open meeting of the National Advisory Committee on Occupational Safety and Health (NACOSH). Congress created NACOSH to advise the Secretary of Labor and the Secretary of Health and Human Services on matters relating to the administration of the Occupational Safety and Health Act of 1970.

DATES: The meeting date is Tuesday, October 14, 1997, from 900: a.m. to about 4:30 p.m. Submit comments and requests for disability accommodations by October 6, 1997.

ADDRESSES: The meeting will take place in the Auditorium (Rooms 1046–48) of the Appalachian Laboratories of Occupational Safety and Health, NIOSH, located at 1095 Willowdale Road in Morgantown, West Virginia. Mail comments to Joanne Goodell, OSHA, N–3641, 200 Constitution Avenue NW., Washington, DC 20210.

FOR FURTHER INFORMATION CONTACT:

Tour Registration and Disability Accommodations: Rebecca Talerico, 304–285–5838; e-mail rjg3@cdc.gov; fax 304–285–5717.

Other Information: Joanne Goodell, 202–219–8021 x107; e-mail jgoodell@dol.gov; fax 202–219–4383.

SUPPLEMENTARY INFORMATION:

Meeting Agenda

Agenda items will include: a brief overview of current activities at OSHA and the National Institute for Occupational Safety and Health (NIOSH), an update on OSHA's Cooperative Compliance Programs (CCP) and 11(c) Program, a discussion of OSHA/NIOSH collaboration, a report from the NACOSH Ergonomics workgroup, and a tour of the facility.

Public Participation

Those wishing to tour the new laboratory should register with NIOSH through Rebecca Talerico at the number above. Also contact Ms. Talerico for special disability accommodations.

Interested persons may send written comments, views, statements or data for consideration by NACOSH, preferably with 20 copies, to Joanne Goodell at the address above. An official record of the meeting will be available for public inspection in the OSHA Technical Data Center (TDC) located in Room N2625 of the Department of Labor Building (202–219–7500).

(Authority: 5 U.S.C. App. 10(a)(2) and 29 CFR 1912a.7)

Signed at Washington, D.C. this 9th day of September, 1997.

Greg Watchman,

Acting Assistant Secretary of Labor for Occupational Safety and Health.

[FR Doc. 97–24400 Filed 9–12–97; 8:45 am]

BILLING CODE 4510–26–M

NATIONAL COMMUNICATIONS SYSTEM

Notice of Publication

SUMMARY: Federal Telecommunications Recommendation (FTR) 1070–1997, ''Detail Specification for 62.5-µm Core Diameter/125-µm Cladding Diameter Class 1a Multimode, Graded Index Optical Waveguide Fibers'' was approved for publication on September 2, 1997. This recommendation defines the optical, geometrical, environmental, and mechanical specifications for glass multimode optical waveguide fibers. This recommendation is based on ANSI/EIA/TIA–492AAAA–1989 (FIPS PUB 159).

FOR FURTHER INFORMATION CONTACT: Contact Dennis Bodson at telephone (703) 607–6200 or write to the National Communications System, Attn: N6, 701 South Court House Road, Arlington VA 22204–2198.

Dennis Bodson,

Chief, Technology and Standards Division.

[FR Doc. 97–24298 Filed 9–12–97; 8:45 am]

BILLING CODE 5000–03–M

NATIONAL CREDIT UNION ADMINISTRATION

Notice of Meeting

TIME AND DATE: 10:00 a.m., Wednesday, September 17, 1997.

PLACE: Board Room, 7th Floor, Room 7047, 1775 Duke Street, Alexandria, VA 22314–3428.

STATUS: Open.

MATTERS TO BE CONSIDERED:

1. Request from Credit Union to Convert to a Federally Chartered Community Credit Union.
2. Request from a Proposed Federal Credit Union for a Low-Income Community Charter.
3. Requests from Federal Credit Unions to Convert to a Community charter.
4. Request from a Savings and Loan Association Converting to a Proposed Credit Union for Federal Share Insurance.
5. Proposed Amendments to Interpretive Ruling and Policy Statement (IRPS) 94–1, Chartering Manual.
6. Proposed Rule: Amendments to Section 725.19, NCUA's Rules and Regulations, Central Liquidity Facility Collateral Requirements.
7. Proposed Notice to Withdraw Certain Outdated Interpretive Rulings and Policy Statements (IRPS).

FOR FURTHER INFORMATION CONTACT: Becky Baker, Secretary of the Board, Telephone 703–518–6304.

Becky Baker,

Secretary of the Board.

[FR Doc. 97–24475 Filed 9–11–97; 9:35 am]

BILIING CODE 7535–01–M

NUCLEAR REGULATORY COMMISSION

[Docket No. 50–263]

Northern States Power Company (Monticello Nuclear Generating Plant); Exemption

I.

Northern States Power Company (the licensee) is the holder of Facility Operating License No. DPR–22 which authorizes operation of the Monticello Nuclear Generating Plant. The Monticello facility is a boiling-water reactor located at the licensee's site in Wright County, Minnesota. The license provides, among other things, that the facility is subject to all rules, regulations, and orders of the Commission now or hereafter in effect.

II.

Pursuant to 10 CFR 50.12(a), ''Specific exemptions,'' the Commission may grant exemptions from the requirements of the regulations of this part (1) which are authorized by law, will not present an undue risk to the public health and safety, and are consistent with the common defense and security; and (2) where special circumstances are present.

Section 50.54(q) of 10 CFR Part 50 requires a licensee authorized to operate a nuclear power reactor to follow and maintain in effect emergency plans that meet the standards of 10 CFR 50.47(b) and the requirements of Appendix E to 10 CFR Part 50. Section IV.F.2.c of Appendix E requires that offsite plans

for each site shall be exercised biennially with full participation by each offsite authority having a role under the plan.

III.

In a letter dated August 18, 1997, the licensee requested a one-time exemption from the requirements of Section IV.F.2.c of Appendix E to 10 CFR Part 50 to exercise Monticello Nuclear Generating Plant's offsite emergency preparedness (EP) plans with State and local government authorities within the plant's plume exposure pathway emergency planning zone (EPZ). The licensee requested this one-time exemption in support of the State of Minnesota's request for relief from the Federal Emergency Management Agency (FEMA) requirements in 44 CFR Part 350 to biennially exercise offsite EP plans. The State and local counties requested relief from FEMA requirements (in accordance with Section 350.9.c of 44 CFR Part 350) due to the hardships caused by recent natural disasters. In a letter dated August 12, 1997, to FEMA Region V, the State of Minnesota provided the following justification for its relief request:

The Minnesota Division of Emergency Management (DEM) and other State agencies are in various phases of seven Presidential Declarations of Major Disasters within the last 2 years. The State experienced record cold, crippling snowfall, and the worst floods in its history. Thousands of State, local, and Federal emergency responders were activated. In July 1997, a string of severe storms brought high speed straight line winds, tornadoes, and more flooding to central Minnesota. DEM continues to have 42 percent of its staff assigned to these natural disasters.

Sherburne and Wright counties (the counties within the plume exposure EPZ) are still conducting damage assessment for their third Presidential Declaration in the last 8 months. Personnel responsible for coordinating the radiological response plan implementation in the upcoming exercise are still in the midst of clean-up, restoration, recovery, and human services activities.

The State has a good record of exercise performance and has not received an exercise deficiency since 1991. Neither county has ever received an exercise deficiency.

Minnesota received numerous accolades from FEMA for the effective and efficient way in which it responded to these natural disasters. The State and county drew upon the planning and exercise experiences from the last 15 years in radiological EP and feel that the actual use of plans and procedures was far more valuable than an exercise.

As stated in 10 CFR 50.47, the NRC bases its finding on the adequacy of offsite EP on FEMA's assessment. In a letter dated August 21, 1997, FEMA notified the NRC that it has determined that granting this relief will have no undue risk on public safety. Since the licensee intends to perform the onsite portion of the 1997 biennial exercise, granting this one-time exemption will not affect the status of onsite EP. Based upon FEMA's assessment of offsite EP for the State and local counties within Monticello's EPZ, and since the onsite portion of the biennial exercise will be performed in 1997, granting this one-time exemption will not pose undue risk to public health and safety.

Section 50.12(a)(2) of 10 CFR specifies that special circumstances must exist for the Commission to consider an exemption request and provides a list of conditions, any of which constitute special circumstances. One of these conditions is ''the exemption would provide only temporary relief from the applicable regulation and the licensee has made good faith efforts to comply with the regulation.'' The licensee will perform the onsite portion of the 1997 biennial exercise and only requested this exemption because of the hardships that performing the offsite portion of the exercise would have on the State and local counties. The licensee expects full participation of the State and local agencies in the next biennial exercise scheduled for June 22, 1999. In addition, the State is scheduled to participate in the July 1998 exercise at the Prairie Island nuclear power plant. Therefore, special circumstances exist that allow for consideration of the licensee's exemption request.

IV.

Accordingly, the Commission has determined, pursuant to 10 CFR 50.12(a), that this exemption is authorized by law, will not present an undue risk to the public health and safety, and is consistent with the common defense and security. The Commission has further determined that special circumstances as provided in 10 CFR 50.12(a)(2) are present justifying the exemption.

Therefore, the Commission hereby grants the requested one-time exemption from the requirements of Section IV.F.2.c of Appendix E to 10 CFR Part 50.

Pursuant to 10 CFR 51.32, the Commission has determined that the granting of this exemption will not have a significant effect on the quality of the human environment (62 FR 47520).

This exemption is effective upon issuance.

Dated at Rockville, Maryland, this 10th day of September 1997.

For The Nuclear Regulatory Commission

Frank J. Miraglia,

Acting Director Office of Nuclear Reactor Regulation.

[FR Doc. 97–24382 Filed 9–12–97; 8:45 am]

BILLING CODE 7590–01–P

NUCLEAR REGULATORY COMMISSION

[Docket 70–7002]

Notice of Amendment to Certificate of Compliance GDP–2 for the U.S. Enrichment Corporation (Portsmouth Gaseous Diffusion Plant, Portsmouth, Ohio)

The Director, Office of Nuclear Material Safety and Safeguards, has made a determination that the following amendment request is not significant in accordance with 10 CFR 76.45. In making that determination the staff concluded that (1) there is no change in the types or significant increase in the amounts of any effluents that may be released offsite; (2) there is no significant increase in individual or cumulative occupational radiation exposure; (3) there is no significant construction impact; (4) there is no significant increase in the potential for, or radiological or chemical consequences from, previously analyzed accidents; (5) the proposed changes do not result in the possibility of a new or different kind of accident; (6) there is no significant reduction in any margin of safety; and (7) the proposed changes will not result in an overall decrease in the effectiveness of the plant's safety, safeguards or security programs. The basis for this determination for the amendment request is shown below.

The NRC staff has reviewed the certificate amendment application and concluded that it provides reasonable assurance of adequate safety, safeguards, and security, and compliance with NRC requirements. Therefore, the Director, Office of Nuclear Material Safety and Safeguards, is prepared to issue an amendment to the Certificate of Compliance for the Portsmouth Gaseous Diffusion Plant. The staff has prepared a Compliance Evaluation Report which provides details of the staff's evaluation.

The NRC staff has determined that this amendment satisfies the criteria for a categorical exclusion in accordance with 10 CFR 51.22. Therefore, pursuant to 10 CFR 51.22(b), no environmental impact statement or environmental assessment need be prepared for this amendment.

USEC or any person whose interest may be affected may file a petition, not exceeding 30 pages, requesting review

of the Director's Decision. The petition must be filed with the Commission not later than 15 days after publication of this **Federal Register** Notice. A petition for review of the Director's Decision shall set forth with particularity the interest of the petitioner and how that interest may be affected by the results of the decision. The petition should specifically explain the reasons why review of the Decision should be permitted with particular reference to the following factors: (1) the interest of the petitioner; (2) how that interest may be affected by the Decision, including the reasons why the petitioner should be permitted a review of the Decision; and (3) the petitioner's areas of concern about the activity that is the subject matter of the Decision. Any person described in this paragraph (USEC or any person who filed a petition) may file a response to any petition for review, not to exceed 30 pages, within 10 days after filing of the petition. If no petition is received within the designated 15-day period, the Director will issue the final amendment to the Certificate of Compliance without further delay. If a petition for review is received, the decision on the amendment application will become final in 60 days, unless the Commission grants the petition for review or otherwise acts within 60 days after publication of this **Federal Register** Notice.

A petition for review must be filed with the Secretary of the Commission, U.S. Nuclear Regulatory Commission, Washington, DC 20555–0001, Attention: Rulemakings and Adjudications Staff, or may be delivered to the Commission's Public Document Room, the Gelman Building, 2120 L Street, NW, Washington, DC, by the above date.

For further details with respect to the action see (1) the application for amendment and (2) the Commission's Compliance Evaluation Report. These items are available for public inspection at the Commission's Public Document Room, the Gelman Building, 2120 L Street, NW, Washington, DC, and at the Local Public Document Room.

Date of amendment request: May 16, 1997.

Brief description of amendment: The proposed amendment reduces the minimum depth design feature requirement for Borosilicate glass Raschig rings (neutron poison) from 12 inches to 6 inches in Scale Pits 1A and 2 as stated in Technical Safety Requirement (TSR) 2.5.4.4 entitled ''Scale Pit Raschig Rings,'' for the Extended Range Product (ERP) facility at the Portsmouth Gaseous Diffusion Plant. The proposed amendment request is required to allow proper operation of the scale mechanism at the ERP 1A station. The request for reduction of the minimum depth of Raschig rings for ERP 2 station is to maintain consistency of administrative control on this neutron poison parameter.

Basis for finding of no significance: 1. The proposed amendment will not result in a change in the types or significant increase in the amounts of any effluents that may be released offsite.

Borosilicate glass Raschig rings are contained in ERP Scale Pits 1A and 2 as enhancements to other primary criticality controls. Modification to the minimum depth requirement would not result in significantly increasing the potential for unconfinement of UF_6 which could lead to an increase in effluents that may be released offsite. On the contrary, retaining the required Raschig rings depth at ERP 1A station to at least 12 inches may cause improper operation of the scale which performs the safety function of measuring cylinder weight. When heated for sampling or some other purpose, an overfilled cylinder could rupture and release a large quantity of UF_6.

2. The proposed amendment will not result in a significant increase in individual or cumulative occupational radiation exposure.

Based on the staff's review of the adequacy of contingency analysis for all credible process upsets, reliability of controls, and adequacy of control independence (common-mode failures), the staff has determined that the proposed amendment will not significantly increase the risk of a criticality accident. The basis for the staff's conclusion is based on the following controls and requirements:

a. To maintain the integrity of the UF_6 pressure boundary, which provides geometry and mass control, USEC is committed to applying appropriate quality assurance requirements to process gas piping and equipment (including valves).

b. To provide moderation control, scale pits are inspected weekly for the presence of liquids. Any liquid found, is transferred out of the scale pits appropriately.

c. Maximum uranium enrichment of ten percent is ensured by the use of in-line gamma and mass spectrometers or via samples if the spectrometers are not operational.

d. Raschig rings in the scale pits are inspected for settling and damage at least on an annual basis. USEC is also committed to maintaining the Raschig rings according to other requirements of ANSI/ANS–8.5 entitled ''Use of Borosilicate-glass Raschig Rings as a Neutron Absorber in Solutions of Fissile Material.''

e. The scale pits are required to be maintained free of uranium buildup.

f. To prevent recirculating cooling water (RCW), which can act as a moderator, from entering the coolant system, the pressure of the RCW is maintained at least 5 psi lower than the coolant system. A pressure switch is provided to automatically trip the UF_6 withdrawal compressor if this minimum pressure differential requirement is not maintained.

g. Smoke detectors are provided in ERP to monitor for UF_6 releases. A UF_6 out-leakage detection system has the capability of automatically isolating the pigtail if two smoke detector heads detect smoke at the withdrawal station. When these smoke detectors are not operational, a smoke watch is maintained. The pigtail isolation system can also be manually actuated from outside ERP.

h. The maximum UF_6 pressure at the ERP station is maintained below 60 psia.

i. Prior to withdrawing UF_6 into a product cylinder, a cold pressure check of the cylinder is performed. The cylinder is rejected if the pressure is greater than ten inches of mercury which provides indication of the probable presence of moderator or a hydrocarbon which can explosively react with UF_6. The cylinder is also visually inspected for damage and weighed before being attached to the pigtail.

j. The staff independently reviewed and found acceptable, USEC's assumptions and calculations leading to the conclusion that for a large UF_6 release in ERP, the heat generated by the exothermic reaction of UF_6 with water vapor in ERP will not be sufficient to actuate the sprinkler system which could introduce moderator into the scale pits.

k. There is a specific coolant pressure TSR Safety Limit (SL) of 440 psig. The purpose of this limit is to prevent the over pressurization and rupture of the coolant system which could result in the subsequent release of UF_6 due to over pressurization and subsequent rupture of the UF_6 containment boundary.

l. There are specific TSR Limiting Conditions of Operation (LCOs), Action Statements for conditions where LCOs are exceeded, and Surveillance Requirements (SRs), dealing with (1) minimum number of operable smoke detectors/alarms to detect and indicate a release of UF_6; (2) coolant high pressure relief to ensure that the TSR SL

of 440 psig is not exceeded; (3) pigtail isolation system to limit the UF_6 release to less than 127 pounds in case of a pigtail failure; (4) assay monitoring to ensure that the TSR specified maximum assays for the accumulators and cylinders are not exceeded; (5) cylinder cart movement restrictions to ensure that a cylinder is not moved while it is connected to the withdrawal manifold; (6) liquid UF_6 cylinder movement methods and restrictions to minimize the risk of a liquid UF_6 cylinder drop and rupture; (7) UF_6 cylinder weight monitoring to ensure that the TSR specified fill weights are not exceeded; and (8) restrictions on heating solidified UF_6 plugs to prevent pipe rupture that could be caused by local liquefaction and expansion.

m. There are specific general design feature requirements and associated SRs related to (1) design, construction, testing and maintenance to ensure that the intended functions of UF_6 cylinders and pigtails are met so that they do not fail during normal operations; (2) cylinder lifting cranes and fixtures to ensure that a cylinder is not dropped and ruptured; and (3) Raschig rings in scale pits to enhance criticality safety. Consequently, there will be no significant increase in a risk of a criticality accident which could significantly increase individual or cumulative occupational radiation exposures.

3. The proposed amendment will not result in a significant construction impact.

The proposed amendment does not involve any construction, therefore, there will be no construction impacts.

4. The proposed amendment will not result in a significant increase in the potential for, or radiological or chemical consequences from, previously analyzed accidents.

For similar reasons (adequacy of contingencies, reliability of controls, and unlikelihood of common-mode failures) provided in the assessment of criterion 2, the proposed amendment will not significantly increase the risk of a criticality accident. Therefore, the proposed amendment will not significantly increase the potential for, or radiological or chemical consequences from, previously analyzed accidents.

5. The proposed amendment will not result in the possibility of a new or different kind of accident.

Based on the adequacy of contingencies, reliability of controls, and unlikelihood of common-mode failures provided in the assessment of criterion 2, the NRC staff has determined that the proposed amendment will not result in the possibility of a new or different kind of accident.

6. The proposed amendment will not result in a significant reduction in any margin of safety.

For similar reasons (adequacy of contingencies, reliability of controls, and unlikelihood of common-mode failures) provided in the assessment of criterion 2, the proposed amendment will not significantly increase the risk of a criticality accident. In addition, the amendment is required to ensure proper operability of the ERP 1A scale, which performs the safety function of measuring the weight of the cylinder as it is being filled. Properly and safely weighing the cylinder is necessary to ensure safety of the facility. Therefore, the proposed amendment will not result in a significant reduction in any margin of safety.

7. The proposed amendment will not result in an overall decrease in the effectiveness of the plant's safety, safeguards or security programs.

For similar reasons (adequacy of contingencies, reliability of controls, unlikelihood of common-mode failures, and operability of ERP 1A scale) provided in the assessment of criteria 2 and 6, the proposed amendment will not significantly increase the risk of a criticality or UF_6 release accident. Therefore, the proposed amendment will not result in a decrease in the plant's overall safety program.

The staff has not identified any safeguards or security related implications from the proposed amendment. Therefore, the proposed amendment will not result in an overall decrease in the effectiveness of the plants safeguards or security programs.

Effective date: The amendment to GDP–2 will become effective 30 days after issuance by NRC.

Certificate of Compliance No. GDP–2: Amendment will incorporate a revised requirement of a General Design Feature contained in the Technical Safety Requirements.

Local Public Document Room location: Portsmouth Public Library, 1220 Gallia Street, Portsmouth, Ohio 45662.

Dated at Rockville, Maryland, this 2nd day of September 1997.

For the Nuclear Regulatory Commission.

William F. Kane,

Acting Deputy Director, Office of Nuclear Material Safety and Safeguards.

[FR Doc. 97–24380 Filed 9–12–97; 8:45 am]

BILLING CODE 7590–01–P

NUCLEAR REGULATORY COMMISSION

[Docket 70–7001]

Notice of Amendment to Certificate of Compliance GDP–1 for the U.S. Enrichment Corporation Paducah Gaseous Diffusion Plant Paducah, KY

The Director, Office of Nuclear Material Safety and Safeguards, has made a determination that the following amendment request is not significant in accordance with 10 CFR 76.45. In making that determination, the staff concluded that: (1) There is no change in the types or significant increase in the amounts of any effluents that may be released offsite; (2) there is no significant increase in individual or cumulative occupational radiation exposure; (3) there is no significant construction impact; (4) there is no significant increase in the potential for, or radiological or chemical consequences from, previously analyzed accidents; (5) the proposed changes do not result in the possibility of a new or different kind of accident; (6) there is no significant reduction in any margin of safety; and (7) the proposed changes will not result in an overall decrease in the effectiveness of the plant's safety, safeguards or security programs. The basis for this determination for the amendment request is shown below.

The NRC staff has reviewed the certificate amendment application and concluded that it provides reasonable assurance of adequate safety, safeguards, and security, and compliance with NRC requirements. Therefore, the Director, Office of Nuclear Material Safety and Safeguards, is prepared to issue an amendment to the Certificate of Compliance for the Paducah Gaseous Diffusion Plant. The staff has prepared a Compliance Evaluation Report which provides details of the staff's evaluation.

The NRC staff has determined that this amendment satisfies the criteria for a categorical exclusion in accordance with 10 CFR 51.22. Therefore, pursuant to 10 CFR 51.22(b), no environmental impact statement or environmental assessment need be prepared for this amendment.

USEC or any person whose interest may be affected may file a petition, not exceeding 30 pages, requesting review of the Director's Decision. The petition must be filed with the Commission not later than 15 days after publication of this **Federal Register** notice. A petition for review of the Director's Decision shall set forth with particularity the interest of the petitioner and how that interest may be affected by the results of the decision. The petition should

specifically explain the reasons why review of the Decision should be permitted with particular reference to the following factors: (1) The interest of the petitioner; (2) how that interest may be affected by the Decision, including the reasons why the petitioner should be permitted a review of the Decision; and (3) the petitioner's areas of concern about the activity that is the subject matter of the Decision. Any person described in this paragraph (USEC or any person who filed a petition) may file a response to any petition for review, not to exceed 30 pages, within 10 days after filing of the petition. If no petition is received within the designated 15-day period, the Director will issue the final amendment to the Certificate of Compliance without further delay. If a petition for review is received, the decision on the amendment application will become final in 60 days, unless the Commission grants the petition for review or otherwise acts within 60 days after publication of this **Federal Register** notice.

A petition for review must be filed with the Secretary, U.S. Nuclear Regulatory Commission, Washington, DC 20555–0001, Attention: Rulemakings and Adjudications Staff, or may be delivered to the Commission's Public Document Room, the Gelman Building, 2120 L Street, NW., Washington, DC, by the above date.

For further details with respect to the action see (1) the application for amendment and (2) the Commission's Compliance Evaluation Report. These items are available for public inspection at the Commission's Public Document Room, the Gelman Building, 2120 L Street, NW., Washington, DC, and at the Local Public Document Room.

Date of amendment request: June 16, 1997.

Brief description of amendment: The amendment proposes to revise the Technical Safety Requirement (TSR) for the Nuclear Criticality Safety Program by adding a new program element.

Basis for Finding of No Significance

1. The proposed amendment will not result in a change in the types or significant increase in the amounts of any effluents that may be released offsite.

The proposed change involves revision of the Nuclear Criticality Safety Program TSR to add a new program element on identification of safety structures, systems and components (SSCs) required to meet the double contingency. Because there are no effluent release associated with this change, the proposed changes will not affect the effluent.

2. The proposed amendment will not result in a significant increase in individual or cumulative occupational radiation exposure.

The proposed changes do not relate to controls used to minimize occupational radiation exposures, therefore, the changes will not increase exposure.

3. The proposed amendment will not result in a significant construction impact.

The proposed changes will not result in any construction, therefore, there will be no construction impacts.

4. The proposed amendment will not result in a significant increase in the potential for, or radiological or chemical consequences from, previously analyzed accidents.

The proposed changes will not increase the probability of occurrence or consequence of any postulated accident currently identified in the safety analysis report. Therefore, there is no significant increase in the potential for or radiological or chemical consequences from previously evaluated accidents.

5. The proposed amendment will not result in the possibility of a new or different kind of accident.

Changing the TSR to add a new program element will not create a new or different type of accident. The proposed changes would not create new operating conditions or new plant configuration that could lead to a new or different type of accident.

6. The proposed amendment will not result in a significant reduction in any margin of safety.

There are no increases in the probability or consequences of a criticality and no new accident initiators were identified. These changes do not increase the margins of safety. In fact safety may be enhanced by putting more emphasis on the clear identification of SSCs necessary to meet the double contingency principle.

7. The proposed amendment will not result in an overall decrease in the effectiveness of the plant's safety, safeguards or security programs.

Implementation of the proposed changes do not change the safety, safeguards, or security programs. Although the program element is being added to the TSR, there was already a commitment to identify the SSCs. The effectiveness of the safety, safeguards, and security programs is not decreased.

Effective date: The amendment to Certificate of Compliance GDP–1 becomes effective 30 days after being signed by the Director, Office of Nuclear Material Safety and Safeguards.

Certificate of Compliance No. GDP–1: Amendment will revise Technical Safety Requirement for the nuclear criticality safety program by adding a new program element.

Local Public Document Room location: Paducah Public Library, 555 Washington Street, Paducah, Kentucky 42003.

Dated at Rockville, Maryland, this 2nd day of September 1997.

For the Nuclear Regulatory Commission.

William F. Kane,

Acting Deputy Director, Office of Nuclear Material Safety and Safeguards.

[FR Doc. 97–24384 Filed 9–12–97; 8:45 am]

BILLING CODE 7590–01–P

NUCLEAR REGULATORY COMMISSION

Advisory Committee on Reactor Safeguards, Subcommittee Meeting on Thermal-Hydraulic and Severe-Accident Phenomena; Notice of Meeting

The ACRS Subcommittee on Thermal-Hydraulic and Severe-Accident Phenomena will hold a meeting on September 29–30, 1997, Room T–2B3, 11545 Rockville Pike, Rockville, Maryland.

Most of the meeting will be closed to public attendance to discuss Westinghouse Electric Corporation proprietary information pursuant to 5 U.S.C. 552b(c)(4).

The agenda for the subject meeting shall be as follows:

Monday, September 29, 1997—8:30 a.m. until the conclusion of business

Tuesday, September 30, 1997—8:30 a.m. until the conclusion of business

The Subcommittee will continue its review of the results of the Westinghouse Test and Analysis Program being conducted in support of the AP600 design certification and the associated NRC staff's Supplemental Draft Safety Evaluation Report. Specifically, the Subcommittee will review key elements of the passive containment cooling system test and analysis program. The purpose of this meeting is to gather information, analyze relevant issues and facts, and to formulate proposed positions and actions, as appropriate, for deliberation by the full Committee.

Oral statements may be presented by members of the public with the concurrence of the Subcommittee Chairman; written statements will be accepted and made available to the Committee. Electronic recordings will be permitted only during those portions of the meeting that are open to the

public, and questions may be asked only by members of the Subcommittee, its consultants, and staff. Persons desiring to make oral statements should notify the cognizant ACRS staff engineer named below five days prior to the meeting, if possible, so that appropriate arrangements can be made.

During the initial portion of the meeting, the Subcommittee, along with any of its consultants who may be present, may exchange preliminary views regarding matters to be considered during the balance of the meeting.

The Subcommittee will then hear presentations by and hold discussions with representatives of the Westinghouse Electric Corporation, the NRC staff, their consultants, and other interested persons regarding this review.

Further information regarding topics to be discussed, whether the meeting has been cancelled or rescheduled, the scheduling of sessions which are open to the public, the Chairman's ruling on requests for the opportunity to present oral statements and the time allotted therefor can be obtained by contacting the cognizant ACRS staff engineer, Mr. Paul A. Boehnert (telephone 301/415–8065) between 7:30 a.m. and 4:15 p.m. (EDT). Persons planning to attend this meeting are urged to contact the above named individual one or two working days prior to the meeting to be advised of any potential changes to the agenda, etc., that may have occurred.

Dated: September 9, 1997.

Sam Duraiswamy,

Chief, Nuclear Reactors Branch.

[FR Doc. 97–24376 Filed 9–12–97; 8:45 am]

BILLING CODE 7590–01–P

NUCLEAR REGULATORY COMMISSION

Sunshine Act Meeting

AGENCY HOLDING THE MEETING: Nuclear Regulatory Commission.

DATE: Week of September 15.

PLACE: Commissioners' Conference Room, 11555 Rockville Pike, Rockville, Maryland.

STATUS: Public and Closed.

MATTERS TO BE CONSIDERED:

Week of September 15

Wednesday, September 17

9:00 a.m.—Briefing by DOE on Plutonium Disposition Strategy and Program (Public Meeting) (Contact: Ted Sherr, 301–415–7218)

Friday, September 19

10:00 a.m.—Briefing by DOE and NRC on Regulatory Oversight of DOE Nuclear Facilities (Public Meeting) (Contact: John Austin, 301–415–7275)

11:30 a.m.—Affirmation Session (Public Meeting) (if needed)

1:30 p.m.—Briefing on Improvements in Senior Management Assessment Process for Operating Reactors (Public Meeting) (Contact: Bill Borchardt, 301–415–1257)

* * * *

* The Schedule for Commission Meetings is Subject to Change on Short Notice. To Verify the Status of Meetings Call (Recording)—(301) 415–1292. Contact Person for More Information: Bill Hill, (301) 415–1661.

* * * * *

The NRC Commission Meeting Schedule can be found on the Internet at:

http://www.nrc.gov//SECY/smj/schedule.htm

* * * * *

This notice is distributed by mail to several hundred subscribers; if you no longer wish to receive it, or would like to be added to it, please contact the Office of the Secretary, Attn: Operations Branch, Washington, D.C. 20555 (301–415–1661).

In addition, distribution of this meeting notice over the internet system is available. If you are interested in receiving this Commission meeting schedule electronically, please send an electronic message to wmh@nrc.gov or dkw@nrc.gov.

* * * * *

Dated: September 10, 1997.

William M. Hill, Jr.,

Secretary, Tracking Officer, Office of the Secretary.

[FR Doc. 97–24555 Filed 9–11–97; 1:49 pm]

BILLING CODE 7590–01–M

NUCLEAR REGULATORY COMMISSION

Draft Regulatory Guide; Issuance, Availability

The Nuclear Regulatory Commission has issued for public comment a draft of a guide planned for its Regulatory Guide Series. This series has been developed to describe and make available to the public such information as methods acceptable to the NRC staff for implementing specific parts of the Commission's regulations, techniques used by the staff in evaluating specific problems or postulated accidents, and data needed by the staff in its review of applications for permits and licenses.

The draft guide, temporarily identified by its task number, DG–1060 (which should be mentioned in all correspondence concerning this draft guide), is titled ''Financial Accounting Standards Board (FASB) Standards for Decommissioning Cost Accounting.'' The guide is intended for Division 1, ''Power Reactors.'' This draft guide is being developed to propose NRC's endorsement of the Financial Accounting Standards Board draft standard No. 158–B, ''Accounting for Certain Liabilities Related to Closure or Removal of Long-Lived Assets.'' (Copies may be obtained from FASB, 401 Merritt 7, P.O. Box 5116, Norwalk, CT 06856–5116.)

This Draft Regulatory Guide DG–1060 is being issued in anticipation of rulemaking regarding the funding for decommissioning power reactors. An advance notice of proposed rulemaking (ANPR) was published on April 8, 1996 (61 FR 15427). After consideration of the responses, the staff believes it is likely that the proposed rule will include a periodic reporting requirement. Issuance of a final regulatory guide is dependent upon issuance of a final rule that includes a provision for a reporting requirement. In the interest of efficiency and utility, the staff is proposing to endorse this draft FASB standard to facilitate licensees' plans for decommissioning.

The draft guide has not received complete staff review and does not represent an official NRC staff position.

Public comments are being solicited on Draft Regulatory Guide DG–1060. Comments may be accompanied by additional relevant information or supporting data. Written comments may be submitted to the Rules and Directives Branch, Office of Administration, U.S. Nuclear Regulatory Commission, Washington, DC 20555. Copies of comments received may be examined at the NRC Public Document Room, 2120 L Street NW., Washington, DC. Comments will be most helpful if received by November 24, 1997.

Although a time limit is given for comments on this draft guide, comments and suggestions in connection with items for inclusion in guides currently being developed or improvements in all published guides are encouraged at any time.

You may also provide comments via the NRC's interactive rulemaking website through the NRC home page (http://www.nrc.gov). This site provides the availability to upload comments as files (any format), if your web browser supports that function. For information about the interactive rulemaking

website, contact Ms. Carol Gallagher, (301) 415–5905; e-mail CAG@nrc.gov.

Regulatory guides are available for inspection at the Commission's Public Document Room, 2120 L Street NW., Washington, DC. Requests for single copies of draft or final guides (which may be reproduced) or for placement on an automatic distribution list for single copies of future draft guides in specific divisions should be made in writing to the U.S. Nuclear Regulatory Commission, Washington, DC 20555, Attention: Printing, Graphics and Distribution Branch; or by fax at (301) 415–5272. Telephone requests cannot be accommodated. Regulatory guides are not copyrighted, and Commission approval is not required to reproduce them.

(5 U.S.C. 552(a))

Dated at Rockville, Maryland, this 9th day of September 1997.

For the Nuclear Regulatory Commission.

Joseph A. Murphy,

Director, Division of Regulatory Applications, Office of Nuclear Regulatory Research.

[FR Doc. 97–24383 Filed 9–12–97; 8:45 am]

BILLING CODE 7590–01–P

PEACE CORPS

Information Collection Requests Under OMB Review

ACTION: Notice of public use form review request to the Office of Management and Budget.

SUMMARY: Pursuant to the Paperwork Reduction Act of 1981 (44 U.S.C., Chapter 35), the Peace Corps is requesting emergency approval and clearance from the Office of Management and Budget for the Immigrants & Refugees Questionnaire to be used by the Office of Domestic Programs. A copy of the information collection may be obtained from Rosyln Docktor, Office of Domestic Programs, Peace Corps, 1990 K St., NW, Washington, DC 20526. Ms. Docktor may be called at (202) 606–3779. Peace Corps invites comments on whether the proposed collection of information is necessary for proper performance of the functions of the Peace Corps, including whether the information will have practical use; the accuracy of the agency's estimate of the burden of the proposed collection of information, including the validity of the methodology and assumptions used; ways to enhance the quality, utility and clarity of the information to be collected; and, ways to minimize the burden of the collection of information on those who are to respond, including through the use of automated collection techniques, when appropriate, and other forms of information technology.

Comments on this form should be addressed to Victoria Becker Wassmer, Desk Officer, Office of Management and Budget, NEOB, Washington, DC 20503.

INFORMATION COLLECTION ABSTRACT:

Title: Program to Assist Immigrants & Refugees Questionnaire.

Need for and use of the Information: This form is completed voluntarily by Returned Peace Corps Volunteers. This information will be used by Domestic Programs to identify individuals interested in assisting immigrant and refugee groups throughout the country. Enrollment in this program also fulfills the third goal of Peace Corps as required by Congressional legislation and to enhance the Office of Domestic Programs global education programs.

Respondents: Returned Peace Corps Volunteers.

Respondents obligation to reply: Voluntary.

Burden on the Public:

a. Annual reporting burden: 434 hrs.

b. Annual record keeping burden: 0 hrs.

c. Estimated average burden per response: 10 min.

d. Frequency of response: one time.

e. Estimated number of likely respondents: 2600.

f. Estimated cost to respondents: $3.35.

This notice is issued in Washington, DC on September 9, 1997.

Stanley D. Suyat,

Associate Director for Management.

Certified to be a true copy of the original document.

Brian Sutherland,

Certifying Officer.

[FR Doc. 97–24401 Filed 9–12–97; 8:45 am]

BILLING CODE 6501–01–M

PENSION BENEFIT GUARANTY CORPORATION

Interest Assumption for Determining Variable-Rate Premium; Interest Assumptions for Multiemployer Plan Valuations Following Mass Withdrawal

AGENCY: Pension Benefit Guaranty Corporation.

ACTION: Notice of interest rates and assumptions.

SUMMARY: This notice informs the public of the interest rates and assumptions to be used under certain Pension Benefit Guaranty Corporation regulations. These rates and assumptions are published elsewhere (or are derivable from rates published elsewhere), but are collected and published in this notice for the convenience of the public. Interest rates are also published on the PBGC's home page (http://www.pbgc.gov).

DATES: The interest rate for determining the variable-rate premium under part 4006 applies to premium payment years beginning in September 1997. The interest assumptions for performing multiemployer plan valuations following mass withdrawal under part 4281 apply to valuation dates occurring in October 1997.

FOR FURTHER INFORMATION CONTACT: Harold J. Ashner, Assistant General Counsel, Office of the General Counsel, Pension Benefit Guaranty Corporation, 1200 K Street, NW., Washington, DC 20005, 202–326–4024 (202–326–4179 for TTY and TDD).

SUPPLEMENTARY INFORMATION:

Variable-Rate Premiums

Section 4006(a)(3)(E)(iii)(II) of the Employee Retirement Income Security Act of 1974 (ERISA) and § 4006.4(b)(1) of the PBGC's regulation on Premium Rates (29 CFR part 4006) prescribe use of an assumed interest rate in determining a single-employer plan's variable-rate premium. The rate is the ''applicable percentage'' (described in the statute and the regulation) of the annual yield on 30-year Treasury securities for the month preceding the beginning of the plan year for which premiums are being paid (the ''premium payment year''). The yield figure is reported in Federal Reserve Statistical Releases G.13 and H.15.

For plan years beginning before July 1, 1997, the applicable percentage of the 30-year Treasury yield was 80 percent. The Retirement Protection Act of 1994 (RPA) amended ERISA section 4006(a)(3)(E)(iii)(II) to provide that the applicable percentage is 85 percent for plan years beginning on or after July 1, 1997, through (at least) plan years beginning before January 1, 2000.

However, under section 774(c) of the RPA, the application of the amendment is deferred for certain regulated public utility (RPU) plans for as long as six months. The applicable percentage for RPU plans will therefore remain 80 percent for plan years beginning before January 1, 1998. (The rules governing the applicable percentages for ''partial'' RPU plans are described in § 4006.5(g) of the premium rates regulation.)

For plans for which the applicable percentage is 85 percent, the assumed interest rate to be used in determining variable-rate premiums for premium

payment years beginning in September 1997 is 5.59 percent (*i.e.*, 85 percent of the 6.58 percent yield figure for August 1997).

The following table lists the assumed interest rates to be used in determining variable-rate premiums for premium payment years beginning between October 1996 and September 1997. The rates for July through September 1997 in the table reflect an applicable percentage of 85 percent and thus apply only to non-RPU plans. However, the rates for months before July 1997, which reflect an applicable percentage of 80 percent, apply to RPU (and ''partial'' RPU) plans as well as to non-RPU plans.

For premium payment years beginning in:	The assumed interest rate is:
October 1996	5.62
November 1996	5.45
December 1996	5.18
January 1997	5.24
February 1997	5.46
March 1997	5.35
April 1997	5.54
May 1997	5.67
June 1997	5.55
July 1997	5.75
August 1997	5.53
September 1997	5.59

For premium payment years beginning in September 1997, the assumed interest rate to be used in determining variable-rate premiums for RPU plans (determined using an applicable percentage of 80 percent) is 5.26 percent. For ''partial'' RPU plans, the assumed interest rates to be used in determining variable-rate premiums can be computed by applying the rules in § 4006.5(g) of the premium rates regulation. The PBGC's 1997 premium payment instruction booklet also describes these rules and provides a worksheet for computing the assumed rate.

Multiemployer Plan Valuations Following Mass Withdrawal

The PBGC's regulation on Duties of Plan Sponsor Following Mass Withdrawal (29 CFR part 4281) prescribes the use of interest assumptions under the PBGC's regulation on Allocation of Assets in Single-employer Plans (29 CFR part 4044). The interest assumptions applicable to valuation dates in October 1997 under part 4044 are contained in an amendment to part 4044 published elsewhere in today's **Federal Register**. Tables showing the assumptions applicable to prior periods are codified in appendix B to 29 CFR part 4044.

Issued in Washington, D.C., on this 10th day of September 1997.

David M. Strauss,

Executive Director, Pension Benefit Guaranty Corporation.

[FR Doc. 97–24396 Filed 9–12–97; 8:45 am]

BILLING CODE 7708–01–P

SECURITIES AND EXCHANGE COMMISSION

Issuer Delisting; Notice of Application To Withdraw From Listing and Registration; (Equisure, Inc., Common Stock, $0.001 Par Value) File No. 1–12483

September 10, 1997.

Equisure, Inc. (''Company'') has filed an application with the Securities and Exchange Commission (''Commission''), pursuant to Section 12(d) of the Securities Exchange Act of 1934 (''Act'') and Rule 12d2–2(d) promulgated thereunder, to withdraw the above specified security (''Security'') from listing and registration on the American Stock Exchange, Inc. (''Amex'' or ''Exchange'').

The reasons alleged in the application for withdrawing the Security from listing and registration include the following:

According to the Company, on August 14, 1997, the Company received a letter from the Exchange stating that the Exchange had made a determination to delist the Security.

The Company has decided to settle matters by removing the Security from the Exchange. The Company believes that due to the impasses between the Exchange and the Company and the anticipated large expenditures of money and management time that would be required before a final resolution of the matters at issue could be obtained, it is in the best interest of the Company and its shareholders that matters be settled by delisting the Security from the Exchange.

The Exchange has also agreed that it would be in the best interest of the Exchange and the investing public to resolve this issue between the Company and the Exchange in this manner.

Any interested person may, on or before September 30, 1997, submit by letter to the Secretary of the Securities and Exchange Commission, 450 Fifth Street, N.W., Washington, D.C. 20549, facts bearing upon whether the application has been made in accordance with the rules of the exchanges and what terms, if any, should be imposed by the Commission for the protection of investors. The Commission, based on the information submitted to it, will issue an order granting the application after the date mentioned above, unless the Commission determines to order a hearing on the matter.

For the Commission, by the Division of Market Regulation, pursuant to delegated authority.

Jonathan G. Katz,

Secretary.

[FR Doc. 96–24377 Filed 9–12–97; 8:45 am]

BILLING CODE 8010–01–M

SECURITIES AND EXCHANGE COMMISSION

[Rel. No. IC–22814; File No. 812–10614]

LEVCO Series Trust, et al.; Notice of Application

September 9, 1997.

AGENCY: Securities and Exchange Commission (''SEC'' or the ''Commission'').

ACTION: Notice of application for an order under Section 6(c) of the Investment Company Act of 1940 (the ''1940 Act'') for exemptions from the provisions of Section 9(a), 13(a), 15(a) and 15(b) of the 1940 Act and Rules 6e–2(b)(15) and 6e–3(T)(b)(15) thereunder.

SUMMARY OF APPLICATION: Applicants seek an order to permit shares of the LEVCO Series Trust and shares of any other open-end investment company that is designed to fund insurance products and for which John A. Levin & Co. or any of its affiliates may serve as investment adviser, administrator, manager, principal underwriter, or sponsor (collectively, the ''Trust'') to be sold to and held by: (1) Separate accounts funding variable annuity and variable life insurance contracts (''Separate Accounts'') issued by both affiliated and unaffiliated life insurance companies (''Participating Insurance Companies''); and (2) certain qualified pension and retirement plans outside the separate account context.

APPLICANTS: LEVCO Series Trust (the ''LEVCO Trust'') and John A. Levin & Co. (the ''Investment Adviser'').

FILING DATES: The application was filed on April 18, 1997, and amended and restated on August 15, 1997.

HEARING OR NOTIFICATION OF HEARING: An order granting the application will be issued unless the Commission orders a hearing. Interested persons may request a hearing on this application by writing to the Secretary of the SEC and serving Applicants with a copy of the request, in person or by mail. Hearing requests must be received by the Commission by

5:30 p.m. on October 6, 1997, and accompanied by proof of service on the Applicants in the form of an affidavit or, for lawyers, a certificate of service. Hearing requests should state the nature of the interest, the reason for the request and the issues contested. Persons may request notification of the date of a hearing by writing to the Secretary of the SEC.

ADDRESSES: Secretary, SEC, 450 Fifth Street, N.W., Washington, D.C. 20549. Applicants, c/o Schulte Roth & Zabel LLP, Attention: Kenneth S. Gerstein, Esq., 900 Third Avenue, New York, New York, 10022.

FOR FURTHER INFORMATION CONTACT: Zandra Y. Bailes, Attorney, or Mark C. Amorosi, Branch Chief, Division of Investment Management, Office of Insurance Products, at (202) 942–0670.

SUPPLEMENTARY INFORMATION: Following is a summary of the application. The complete application is available for a fee from the Public Reference Branch of the SEC, 450 Fifth Street, N.W., Washington, D.C. 20549 (tel. (202) 942–8090).

Applicants' Representation

1. The LEVCO Trust is a Delaware business trust and is registered under the 1940 Act as an open-end diversified management investment company. It currently consists of one series known as LEVCO Equity Value Fund (''Equity Value Fund''). Additional series may in the future be authorized (each, including Equity Value Fund, a ''Series''). Each Series may issue one or more classes of shares representing interests therein, subject to compliance with the provisions of Rule 18f–3 under the 1940 Act. Certain classes of shares may incur fees or bear certain costs relating to the distribution of shares of such class pursuant to plans adopted in accordance with Rule 12b–1 under the 1940 Act.

2. The Investment Adviser serves as the investment adviser to the LEVCO Trust. The Investment Adviser is an indirect, wholly-owned subsidiary of Baker, Fentress & Company, a registered closed-end investment company listed on the New York Stock Exchange.

3. Shares of the Trust will be offered to Participating Insurance Companies and their Separate Accounts to enable the Series to serve as the investment vehicles for various types of insurance products, which may include all variations of variable annuity and variable life insurance contract (the ''Variable Contracts'').

4. Shares of the Trust also may be offered and sold directly to certain qualified pension and retirement plans (''Qualified Plans'').

Applicants' Legal Analysis

1. Applicants request that the Commission issue an order under Section 6(c) of the 1940 Act exempting variable life insurance Separate Accounts (and, to the extent necessary, any principal underwriter or depositor of such an account) and Applicants from Sections 9(a), 13(a), 15(a) and 15(b) and Rules 6e–2(b)(15) and 6e–3(T)(b)(15) thereunder, to the extent necessary to permit shares of the Trust to be offered and sold to both variable annuity separate accounts and variable life insurance separate accounts of the same life insurance company or affiliated life insurance companies (*i.e.*, mixed funding) and to permit shares of the Trust to be offered and sold to Separate Accounts of unaffiliated life insurance companies (*i.e.*, share funding) and to Qualified Plans.

2. Section 6(c) of the 1940 Act authorizes the Commission, by order upon application, to conditionally or unconditionally exempt any person, security or transaction, or any class or classes of persons, securities or transactions from any provisions of the 1940 Act or the rules or regulations thereunder, if and to the extent that such exemption is necessary or appropriate in the public interest and consistent with the protection of investors and the purposes fairly intended by the policy and provisions of the 1940 Act.

3. In connection with the funding of scheduled premium variable life insurance contracts issued through separate accounts registered under the 1940 Act as unit investment trust, Rule 6e–2(b)(15) under the 1940 Act provides partial exemptions from Sections 9(a), 13(a), 15(a) and 15(b) of the 1940 Act. The exemptions granted by Rule 6e–2(b)(15) are available, however, only where all of the assets of the separate account consist of the shares of one or more registered management investment companies which offer their shares ''exclusively to variable life insurance separate accounts of the life insurer, or of any affiliated life insurance company'' (emphasis supplied).[1] Therefore, the relief granted by Rule 6e–2(b)(15) is not available with respect to a separate account that owns shares of an underlying fund that also offers its shares to both variable annuity and variable life insurance separate accounts of the same company or of any affiliated life insurance company. In addition, the relief granted by Rule 6e–2(b)(15) is not available if shares of the underlying management investment company are offered to separate accounts of unaffiliated life insurance companies or to Qualified Plans.

4. Applicants submit that the relief granted by Rule 6e–2(b)(15) is in no way affected by the purchase of shares of the Trust by Qualified Plans. However, because the relief under Rule 6e–2(b)(15) is available only where shares are offered *exclusively* to Separate Accounts, additional exemptive relief is necessary if shares of the Trust are also to be sold to Qualified Plans.

5. In connection with flexible premium variable life insurance contracts issued through a separate account, Rule 6e-3(T)(b)(15) provides partial exemptions from Sections 9(a), 13(a), 15(a) and 15(b) of the 1940 Act. The exemptions granted by Rule 6e–3(T) are available only to separate accounts that own shares of underlying funds that offer shares ''exclusively to separate accounts of the life insurer, or of any affiliated life insurance company, offering either scheduled contracts or flexible contracts, or both; or which also offer their shares to variable annuity separate accounts of the life insurer or of an affiliated life insurance company'' (emphasis supplied).[2] Therefore, Rule 6e–3(T) permits mixed funding, but does not permit shared funding.

6. Because the relief under Rule 6e–3(T) is available only where shares are offered exclusively to separate accounts of insurance companies, additional exemptive relief is necessary if shares of the Trust also are to be sold to Qualified Plans.

7. Current tax law permits the Trust to increase its asset base through the sale of its shares to Qualified Plans. Section 817(h) of the Internal Revenue Code of 1986, as amended (the ''Code''), imposed certain diversification standards on fund investments underlying Variable Contracts. Treasury Regulations provide that, to meet the diversification requirements, all of the beneficial interests in the underlying investment company must be held by the segregated asset accounts of one or more insurance companies. The Treasury Regulations, however, also contain certain exceptions to this requirement, one of which allows shares in the investment company to be held by the trustee of a Qualified Plan

[1] The exemptions provided by Rule 6e–2 also are available to the investment adviser, principal underwriter, and sponsor or depositor of the separate account.

[2] The exemptions provided by Rule 6e–3(T) also are available to the investment adviser, principal underwriter, and sponsor or depositor of the separate account.

without adversely affecting the ability of life insurance companies to hold shares in the same investment company in their separate accounts (Treas. Reg. 1.817–5(f)(3)(iii)).

8. Applicants state that the promulgation of Rules 6e–2(b)(15) and 6e–3(T)(b)(15) under the 1940 Act preceded the issuance of the Treasury Regulations. Applicants assert that, given the then-current tax law, the sale of shares of the same investment company to both separate accounts and Qualified Plans was not envisioned at the time of the adoption of of Rules 6e–2(b)(15) and 6e–3(T)(b)(15).

9. Section 9(a) of the 1940 Act provides that it is unlawful for any person to serve as investment adviser to or principal underwriter of any registered open-end investment company if an affiliated person of that company is subject to a disqualification enumerated in Section 9(a) (1) or (2). Rules 6e–2(b)(15) and 6e–3(T)(b)(15) provide exemptions from Section 9(a) under certain circumstances, subject to the limitations on mixed and shared funding. These exemptions limit the application of the eligibility restrictions to affiliated individuals or companies that directly participate in the management of the underlying fund.

10. Applicants state that the partial relief granted in Rules 6e–2(b)(15) and 6e–3(T)(b)(15) from the requirements of Section 9, in effect, limits the amount of monitoring necessary to ensure compliance with Section 9 to that which is appropriate in light of the policy and purposes of Section 9. Applicants state that those Rules recognize that it is not necessary for the protection of investors or the purposes fairly intended by the policy and provisions of the 1940 Act to apply the provisions of Section 9(a) to the many individuals in an insurance company complex, most of whom typically will have no involvement in matters pertaining to investment companies within that organization. Applicants assert, therefore, that applying the restrictions of Section 9(a) to all individuals in Participating Insurance Companies that participate in mixed and shared funding arrangements serves no regulatory purpose.

11. Applicants state that the relief requested should not be affected by the proposed sale of shares of the Trust to Qualified Plans because the Qualified Plans are not investment companies, and will not be deemed to be affiliated solely by virtue of their shareholdings.

12. Applicants state that Rules 6e–2(b)(15)(iii) and 6e–3(T)(b)(15)(iii) assume the existence of a ''pass-through'' voting requirement with respect to management investment company shares held by a separate account. Rules 6e–2(b)(15)(iii) and 6e–3(T)(b)(15)(iii) provide partial exemptions from the pass-through voting requirement, under certain circumstances. More specifically, of Rules 6e–2(b)(15)(iii)(A) and 6e–3(T)(b)(15)(iii)(A) provide that the insurance company may disregard the voting instructions of its contract owners with respect to the investments of an underlying fund, or any contract between a fund and its investment adviser, when required to do so by an insurance regulatory authority and subject to certain requirements. In addition, Rules of Rules 6e–2(b)(15)(iii)(B) and 6e–3(T)(b)(15)(iii)(A)(*2*) provide that the insurance company may disregard voting instructions of its contract owners if the contract owners initiate any change in the company's investment policies, principal underwriter or any investment adviser (provided that disregarding such voting instructions is reasonable and subject to the other provisions of paragraphs (b)(5)(ii) and (b)(7)(ii) (B) and (C) of each rule).

13. Applicants state that Rule 6e–2 recognizes that a variable life insurance contract is an insurance contract and is subject to extensive state insurance regulation. Applicants maintain, therefore, that in adopting of Rules 6e–2(b)(15)(iii), the Commission expressly recognized that state insurance laws or regulators have authority, pursuant to state insurance laws or regulations, to disapprove or require changes in investment policies, investment advisers or principal underwriters. The Commission also expressly recognized that state insurance regulators have authority to require a life insurance company to draw from its general account to cover costs imposed upon the insurer by a change approved by contract owners over the insurer's objection. The Commission therefore deemed such exemptions necessary ''to assure the solvency of the life insurer and performance of its contractual obligations by enabling an insurance regulatory authority or life insurer to act when certain proposals reasonably could be expected to increase the risks undertaken by the life insurer. In this respect, flexible premium variable life insurance contracts are identical to scheduled premium variable life insurance contracts. Therefore, Rule 6e–3(T)'s corresponding provisions for flexible premium variable life insurance contracts undoubtedly were adopted in recognition of the same considerations as the Commission applied in adopting Rule 6e–2.

14. Applicants maintain that these considerations are no less important or necessary when an insurance company funds its separate accounts in connection with mixed and shared funding. Such mixed and shared funding does not compromise the goals of the insurance regulatory authorities or of the Commission. Applicants argue that by permitting such arrangements, the Commission eliminates needless duplication of start-up and administrative expenses and potentially increases an investment company's assets, thereby making portfolio management strategies easier to implement and promoting other economies of scale.

15. Applicants further represent that the sale of the Trust's shares to Qualified Plans will not impact the relief requested in this regard. Shares of the Trust sold to Qualified Plans would be held by the trustees of such Qualified Plans as required by Section 403(a) of the Employment Retirement Income Security Act (''ERISA''). Section 403(a) also provides that the trustee(s) must have exclusive authority and discretion to manage and control the Plan with two exceptions: (1) When the Qualified Plan expressly provides that the trustee(s) are subject to the direction of a named fiduciary who is not a trustee, in which case the trustees are subject to proper directions made in accordance with the terms of the Qualified Plan and not contrary to ERISA, and (2) when the authority to manage, acquire or dispose of assets of the Qualified Plan is delegated to one or more investment managers pursuant to Section 402(c)(3) of ERISA. Unless one of the two exceptions stated in Section 403(a) applies, Qualified Plan trustees have the exclusive authority and responsibility for voting proxies. Where a named fiduciary appoints an investment manager, the investment manager has the responsibility to vote the shares held unless the right to vote such shares is reserved to the trustees or the named fiduciary. In any event, there is no pass-through voting to the participants in such Qualified Plans. Accordingly, Applicants note that, unlike the case with insurance company separate accounts, the issue of the resolution of material irreconcilable conflicts with respect to voting is not present with Qualified Plans.

16. Applicants state that no increased conflicts of interest would be present by the granting of the requested relief. Applicants assert that shared funding does not present any issues that do not already exist where a single insurance

company is licensed to do business in several or all states. In this regard, Applicants note that a particular state insurance regulatory body could require action that is inconsistent with the requirements of insurance regulators in one or more other states in which the insurance company offers its policies. Applicants submit that the fact that different insurers may be domiciled in different states does not create a significantly different or enlarged problem.

17. Applicants assert that shared funding is no different than the use of the same investment company as the funding vehicle for affiliated insurers, which Rules 6e–2(b)(15) and 6e–3(T)(b)(15) permit. Affiliated insurers may be domiciled in different states and be subject to differing state law requirements. Affiliation does not reduce the potential, if any exists, for differences in state regulatory requirements. In any event, Applicants submit that the conditions discussed below (which are adapted from the conditions included in Rule 6e–3(T)(b)(15)) are designed to safeguard against, and provide procedures for resolving, any adverse effects that differences among state regulatory requirements may produce.

18. Applicants note the Rules 6e–2(b)(15) and 6e–3(T)(b)(15) give an insurance company the right to disregard the voting instructions of contract owners. Applicants submit that this does not raise any issues different from those raised by the authority of state insurance administrators over separate accounts. Affiliation does not eliminate the potential, if any exists, for divergent judgments as to the advisability or legality of a change in investment policies, principal underwriter, or investment adviser initiated by contract owners. The potential for disagreement is limited by the requirements in Rules 6e–2 and 6e–3(T) that the insurance company's disregard of voting instructions be reasonable and based on specific good-faith determinations.

19. Applicants state that there is no reason why the investment policies of the Trust would or should be materially different from what those policies would or should be if such investment company or series thereof funded only variable annuity or variable life insurance contracts. In this regard Applicants note that each type of variable insurance product is designed as a long-term investment program. Moreover, Applicants represent that each Series will be managed to attempt to achieve the investment objective of such Series and not to favor or disfavor any particular insurance company or type of insurance product.

20. Furthermore, Applicants submit that no one investment strategy can be identified as appropriate to a particular insurance product. Each pool of variable annuity and variable life insurance contract owners is composed of individuals of diverse financial status, age, insurance, and investment goals. A fund supporting even one type of insurance product must accommodate those factors in order to attract and retain purchasers.

21. In connection with the proposed sale of shares of the Trust to Qualified Plans, Applicants submit that either there are no conflict of interest or there exists the ability by the affected parties to resolve any such conflicts without harm to the contract owners in the Separate Accounts or to the participants in the Qualified Plans. Applicants note that Section 817(h) of the Code imposes certain diversification standards on fund assets underlying Variable Contracts. Treasury Regulation 1.817–5(f)(3)(iii), which established diversification requirements for such portfolios, specifically permits ''qualified pension or retirement plans'' and separate accounts to share the same underlying management investment company. Therefore, Applicants have concluded that neither the Code, the Treasury Regulations, nor Revenue Rulings thereunder, present any inherent conflicts of interest if Qualified Plans, variable annuity separate accounts, and variable life insurance separate accounts all invest in the same management investment company.

22. Applicants note that while there are differences in the manner in which distributions are taxed for variable annuity contracts, variable life contracts and Qualified Plans, these tax consequences do not raise any conflicts of interest. When distributions are to be made, and a Separate Account or Qualified Plan is unable to net purchase payments to make the distributions, the Separate Account or the Qualified Plan will redeem shares of the Trust at their respective net asset value. The Qualified Plan will then make distributions in accordance with the terms of the Qualified Plan, and the Participating Insurance Company will make distributions in accordance with the terms of the Variable Contract.

23. With respect to voting rights, Applicants state that it is possible to provide an equitable means of giving voting rights to Separate Account contract owners and to the trustees of Qualified Plans. Applicants represent that the transfer agent for the Trust will inform each Participating Insurance Company of its share ownership in each Separate Account, and will inform the trustees of Qualified Plans of their holdings. Each Participating Insurance Company will then solicit voting instructions in accordance with Rules 6e–2 and 6e–3(T).

24. Applicants contend that the ability of the Trust to sell its shares directly to Qualified Plans does not create a ''senior security,'' as such term is defined under Section 18(g) of the 1940 Act. Regardless of the rights and benefits of participants and contract owners under the respective Qualified Plans and Variable Contracts, the Qualified Plans and the Separate Accounts have rights only with respect to their shares of the Trust. Such shares may be redeemed only at their net asset value. No shareholder of the Trust will have any preference over any other shareholder of the Trust with respect to distribution of assets or payment of dividends.

25. Applicants submit that there are no conflicts between the contract owners of the Separate Accounts and participants under the Qualified Plans with respect to the state insurance commissioners' veto powers (direct with respect to variable life insurance and indirect with respect to variable annuities) over investment objectives. The state insurance commissioners have been given the veto power in recognition of the fact that insurance companies cannot simply request redemption of shares held by their Separate Accounts and have shares redeemed out of one fund and invested in another. Generally, to accomplish such redemptions and transfers, complex and time-consuming transactions must be undertaken. Conversely, trustees of Qualified Plans can make the decision and implement redemption of shares from the Trust and reinvest in another funding vehicle without the same regulatory impediments, or even hold cash pending suitable investment. Based on the foregoing, Applicants represent that even if there should arise issues where the interests of Qualified Plans are in conflict, the issues can be almost immediately resolved because the trustees of the Qualified Plans can, independently, redeem the shares of the Trust which they hold.

26. Applicants state that various factors have kept certain insurance companies from offering variable annuity and variable life insurance contracts. According to Applicants, these factors include the costs of organizing and operating an investment funding medium, the lack of expertise with respect to investment management

(principally with respect to stock and money market investments) and the lack of name recognition by the public of certain insurers as investment professionals. Applicants contend that use of the Trust as common investment media for Variable Contracts as well as for Qualified Plans would ease these concerns. Participating Insurance Companies and Qualified Plans would benefit not only from the investment and administrative expertise of the Investment Adviser and its affiliates, but also from the cost efficiencies and investment flexibility afforded by a large pool of funds. Applicants state that making the Trust available for mixed and shared funding may encourage more insurance companies to offer Variable Contracts which may then increase competition with respect to both the design and the pricing of Variable Contracts. Thus, Applicants represent that contract owners would benefit because mixed and shared funding will eliminate a significant portion of the costs of establishing and administering separate funds. Moreover, Applicants assert that sales of shares of the Trust to Qualified Plans should increase the amount of assets available for investment by the Trust. This should, in turn, promote economies of scale and permit increased safety of investments through greater diversification.

Applicants' Conditions

Applicants have consented to the following conditions:

1. A majority of the Board of Trustees of each Trust (each, a ''Board'') shall consist of persons who are not ''interested persons'' of the Trust, as defined by Section 2(a)(19) of the 1940 Act, and the rules thereunder, and as modified by any applicable orders of the Commission, except that if this condition is not met by reason of the death, disqualification or bona fide resignation of any trustee, then the operation of this condition shall be suspended: (a) For a period of 45 days if the vacancy or vacancies may be filled by the Board; (b) for a period of 60 days if a vote of shareholders is required to fill the vacancy or vacancies; or (c) for such longer period as the Commission may prescribe by order upon application.

2. The Board will monitor the Trust for the existence of any material irreconcilable conflict between and among the interests of the variable annuity and variable life insurance contract owners investing in the Separate Accounts and participants in all Qualified Plans investing in Series of the Trust and determine what action, if any, should be taken in response to such conflicts. A material irreconcilable conflict may arise for a variety of reasons, including: (a) An action by any state insurance regulatory authority; (b) a change in applicable federal or state insurance, tax or securities laws or regulations, or a public ruling, private letter ruling, no-action or interpretive letter, or any similar action by insurance, tax or securities regulatory authorities; (c) an administrative or judicial decision in any relevant proceeding; (d) the manner in which the investments of any Series are being managed; (e) a difference in voting instructions given by variable annuity contract owners and owners of variable life insurance contracts and trustees of the Plans; or (f) a decision by a Participating Insurance Company to disregard the voting instructions of contract owners.

3. If a Qualified Plan becomes an owner of 10% or more of the assets of the Trust, such Plan will execute a participation agreement with the Trust that provides appropriate protection consistent with the representations in the application. In connection with its initial purchase of shares of the Trust, the Qualified Plan will be required to acknowledge this condition in its application to purchase the shares.

4. The Participating Insurance Companies, the Investment Adviser and any Qualified Plan that executes a fund participation agreement upon becoming an owner of 10% or more of the issued and outstanding shares of the Trust (collectively, the ''Participating Entities'') will report any potential or existing conflicts to the Board. Participating Entities will be responsible for assisting the Board in carrying out the responsibilities of the Board under these conditions by providing the Board with all information reasonably necessary for the Board to consider any issues raised. This responsibility includes, but is not limited to, an obligation by each Participating Insurance Company to inform the Board whenever contract owner voting instructions are disregarded. The responsibility to report such conflicts and information to the Board and to assist the Board will be a contractual obligation of all Participating Insurance Companies and Qualified Plans investing in the Trust; these responsibilities will be carried out with a view only to the interest of the contract owners and participants in Qualified Plans.

5. If it is determined by a majority of a Board, or a majority of its disinterested trustees, that a material irreconcilable conflict exists, the relevant Participating Insurance Companies and Qualified Plans shall, at their expense and to the extent reasonably practicable (as determined by a majority of the disinterested trustees), take whatever steps are necessary to remedy or eliminate the irreconcilable material conflict, up to and including: (a) Withdrawing the assets allocable to some or all of the Separate Accounts from the affected Series of the Trust and reinvesting such assets in a different investment medium, including another Series, or submitting the question of whether such segregation should be implemented to a vote of all affected contract owners and, as appropriate, segregating the assets of any appropriate group (*i.e.,* variable annuity contract owners or variable life insurance contract owners of one or more Participating Insurance Companies) that votes in favor of such segregation, or offering to the affected contract owners the option of making such a change; (b) withdrawing the assets allocable to some or all of the Qualified Plans from the affected Series of the Trust and reinvesting those assets in a different investment medium, including another Series; and (c) establishing a new registered management investment company or managed separate account. If a material irreconcilable conflict arises because of a Participating Insurance Company's decision to disregard voting instructions of the owners of the contracts, and that decision represents a minority position or would preclude a majority vote, the Participating Insurance Company may be required, at the election of the Trust, within its sole discretion, to withdraw its Separate Account's investment in the Trust, with no charge or penalty being imposed. The responsibility to take remedial action in the event of a Board determination of an irreconcilable material conflict and to bear the cost of such remedial action will be a contractual obligation of all Participating Insurance Companies and all Qualified Plans under the agreements governing their participation in the Trust. The responsibility to take such remedial action shall be carried out with a view only to the interests of contract owners and participants in Qualified Plans.

6. For the purposes of Condition 5, a majority of the disinterested members of the Board shall determine whether or not any proposed action adequately remedies any material irreconcilable conflict, but, in no event will the Trust or the Investment Adviser be required to establish a new funding medium for any Variable Contract. No Participating

Insurance Company shall be required by Condition 5 to establish a new funding medium for any Variable Contract if any offer to do so has been declined by the vote of a majority of contract owners who are materially and adversely affected by the irreconcilable material conflict.

7. A Board's determination of the existence of an irreconcilable material conflict and its implications will be made known promptly and in writing to all Participating Entities.

8. Participating Insurance Companies will provide pass-through voting privileges to all Variable Contract owners so long as the Commission continues to interpret the 1940 Act as requiring pass-through voting privileges for variable annuity and variable life insurance contract owners. Accordingly, the Participating Insurance Companies will vote shares of the Trust held in their Separate Accounts in a manner consistent with voting instructions timely received from contract owners. Each Participating Insurance Company will vote shares of the Trust held in the Participating Insurance Company's Separate Accounts for which no voting instructions from contract owners are timely-received, as well as shares of the Trust which the Participating Insurance Company itself owns, in the same proportion as those shares of the Trust for which voting instructions from contract owners are timely-received. Participating Insurance Companies will be responsible for assuring that each of their Separate Accounts participating in the Trust calculates voting privileges in a manner consistent with other participation Insurance Companies. The obligation to calculate voting privileges in a manner consistent with all other Separate Accounts investing in the Trust shall be a contractual obligation of all Participating Insurance Companies under their agreements governing their participation in the trust. Each Qualified plan will vote as required by applicable law and governing Plan documents.

9. The Trust will comply with all provisions of the 1940 Act requiring voting by shareholders (which, for these purposes, shall be the persons having a voting interest in the shares of the Trust), and, in particular, the Trust will either provide for annual meetings (except to the extent that the /Commission may interpret Section 16 of the 1940 Act not to require such meetings) or comply with Section 16(c) of the 1940 Act (although the Trust is not one of the trusts described in Section 16(c) of the 1940 Act), as well as with Section 16(a) of the 1940 Act, and, if and when applicable, Section 16(b) of the 1940 Act. Further, The Trust will act in accordance with the Commission's interpretation of the requirements of Section 16(a) with respect to periodic elections of trustees and with whatever rules the Commission may promulgate with respect thereto.

10. The Trust will notify all Participating Insurance Companies that Separate account prospectus disclosures regarding potential risks of mixed and shared funding may be appropriate. The trust will disclose in the prospectuses of the Series that: (a) The Trust is intended to be a funding vehicle for all types of variable annuity and variable life insurance contracts offered by various insurance companies and for certain qualified pension and retirement plans; (b) material irreconcilable conflicts possibly may arise; and (c) the Trust's Board will monitor events in order to identify the existence of any material irreconcilable conflicts and to determine what action, if any, should be taken in response to any such conflict.

11. If, and to the extent that, Rules 6e–2 or 6e–3(T) are amended (or if Rule 6e–3 under the 1940 Act is adopted) to provide exemptive relief from any provision of the 1940 Act or the rules thereunder with respect to mixed or shared funding on terms and conditions materially different from any exemptions granted in the order requested by Applicants, then the Trust and/or the Participating Entities, as appropriate, shall take such steps as may be necessary to comply with Rule 6e–2 or 6e–3(T), as they may be amended, and Rule 6e–3, as it may be adopted, to the extent such rules are applicable.

12. At least annually, the Participating Entities shall submit to the Board such reports, materials or data as the Board reasonably may request so that the Board may carry out fully the obligations imposed by the conditions contained in these conditions. Such reports, materials and data shall be submitted more frequently if deemed appropriate by the Board. The obligations of the Participating Entities to provide these reports, materials and data to the Board, when the Board so reasonably requests, shall be a contractual obligation of all Participating Entities under their agreements governing participation in the Trust.

13. All reports received by a Board of potential or existing conflicts, and all Board action with regard to (a) determining the existence of a conflict; (b) notifying Participating Entities of a conflict; and (c) determining whether any proposed action adequately remedies a conflict, will be properly recorded in the minutes of the Board or other appropriate records. Such minutes or other records shall be made available to the Commission upon request.

Conclusion

For the reasons summarized above, Applicants assert that the requested exemptions are appropriate in the public interest and consistent with the protection of investors and the purposes fairly intended by the policy and provisions of the 1940 Act.

For the Commission, by the Division of Investment Management, pursuant to delegated authority.

Margaret H. McFarland,

Deputy Secretary.

[FR Doc. 97–24378 Filed 9–12–97; 8:45 am]

BILLING CODE 8010–01–M

SECURITIES AND EXCHANGE COMMISSION

[Release No. 34–39028; File No. SR–CHX–97–15]

Self-Regulatory Organizations; Chicago Stock Exchange, Inc.; Order Granting Approval to Proposed Rule Change Relating to a Specialist's De-Registration in an Issue

September 8, 1997.

I. Introduction

On June 4, 1997, the Chicago Stock Exchange, Inc. (''CHX'' or ''Exchange'') submitted to the Securities and Exchange Commission (''Commission''), pursuant to Section 19(b)(1) of the Securities Exchange Act of 1934 (''Act'')[1] and Rule 19b–4 thereunder,[2] a proposed rule change to amend Article XXX, Rule 1, Interpretation and Policy .01 of the CHX Rules, to change a policy of the Exchange's Committee on Specialist Assignment and Evaluation (''CSAE'') relating to the time periods for which a co-specialist must trade a security before deregistering as the specialist for the security. This policy would be in effect for a one year pilot program.

Notice of the proposed rule change, together with the substance of the proposal, was published for comment in Securities Exchange Act Release No. 38882 (July 28, 1997), 62 FR 41981 (August 4, 1997). No comments were received on the proposal. This order approves the proposed rule change.

II. Description

The Exchange's CSAE is responsible for, among other things, appointing

[1] 15 U.S.C. § 78s(b)(1).

[2] 17 CFR 240.19b–4.

specialists and co-specialists[3] and conducting de-registration proceedings in accordance with Article XXX of the Exchange's rules.[4] As described in existing Interpretation and Policy .01 of Rule 1 of Article XXX, seven circumstances may lead to the need for assignment or re-assignment of a security. One such circumstance is by specialist request.

Currently, the CSAE ''will initiate a re-assignment proceeding if it believes that such action is called for.''[5] Using this standard, the CSAE's current policy is to require a co-specialist to trade an issue awarded in competition[6] for a two year period, and to trade an issue awarded without competition for a six-month period, before permitting a co-specialist to de-register in the issue.

The CHX proposes to amend this policy for a one year pilot program. Specifically, the proposal would change the time periods for which a co-specialist must trade an issue before the CSAE will, in general, approve a co-specialist's request to deregister in an issue.[7] These time periods would vary depending on whether the issue was awarded in competition or without completion and whether another specialist will assume the responsibility to trade the issue.

Under the proposed rule change, for a security that was awarded to a co-specialist in competition, such co-specialist will be required to trade the security for one year before being able to deregister in the security if no other specialist will be assigned to the security after posting.[8] The two year time period currently in place for an intra-firm transfer of such issues (*i.e.,* transferring the issue to another co-specialist in the same specialist unit) will remain. For a security that was awarded to a co-specialist without competition, such co-specialist will be required to trade the security for a three month period before being able to deregister in the security if no other specialist will be assigned to the security after posting. The six month time period currently in place for an intra-firm transfer of such issues will remain.

Whether or not the security was awarded in competition, the effective date of a specialist's deregistration in an issue for which no specialist will be assigned after posting will be the first business day of each calendar quarter; provided, however, that the applicable time period for which a specialist is required to trade an issue must have been satisfied prior to such date.

Whether or not the security was awarded in competition, in general, the CSAE will require specialists to provide sending firms at least 15 days advance notice of a its intention to de-register in the issue.

III. Discussion

The Commission finds that the proposed rule change is consistent with the requirements of the Act and the rules and regulations thereunder applicable to a national securities exchange, and, in particular, with the requirements of Section 6(b).[9] Specifically, the Commission believes the proposal is consistent with the Section 6(b)(5) requirements that the rules of an exchange be designed to promote just and equitable principles of trade, to prevent fraudulent and manipulative acts, and, in general, to protect investors and the public.[10]

The Commission believes that the new policy, as proposed, should result in a more accurate balance between the interests of consistency and continuity with respect to the trading of an issue by a particular specialist and that of a specialist in having the flexibility to deregister in an unprofitable issue. In this regard, the Commission believes that the proposed rule change will still preserve an appropriate time period for which the specialist cannot deregister in an issue. For a security that was awarded to a co-specialist in competition, such co-specialist will be required to trade the security for one year before being able to deregister in the security if no other specialist will be assigned to the security after posting. For a security that was awarded to a co-specialist without competition, such co-specialist will be required to trade the security for a three month period before being able to deregister in the security if no other specialist will be assigned to the security after posting.

The Commission also believes that the proposed new policy may help to encourage more specialists and co-specialists to apply for additional issues. The Commission notes that under the current policy, a specialist or co-specialist may be reluctant to apply to become a specialist in an issue because of the long time period for which it must hold the security before deregistering. By reducing the current time periods for which a specialist or co-specialist must trade a security before being allowed to deregister in that security, when no other specialist will be assigned to that security, the proposal may reduce the risk and exposure that is attendant with registering for a particular issue. In turn, the Commission believes that the proposal could increase the overall liquidity and depth of the CHX market by encouraging specialists to register in additional securities.

The Commission further believes that the proposed pilot provides adequate notice to order entry firms of the change in the status of an issue, by providing that such firms be given at least 15 days advance notice of a co-specialist's intention to deregister in the issue. In addition, the effective date of a specialist's deregistration will be the first business day of each calendar quarter; provided, however, that the applicable time period for which a specialist is required to trade an issue must have been satisfied prior to such date.

The Commission believes that approving the proposed rule change as a pilot program is reasonable under the Act because it will serve to protect investors and the public interest by allowing the CHX time to collect data on its effectiveness and to determine whether any modifications are necessary. The pilot will expire on September 8, 1998. The Commission requests that the CHX submit a report on the effectiveness of the pilot program by July 8, 1998. The report should state the Exchange's views on the effectiveness of the policy change, including, but not limited to, whether there has been an increase in the

[3] A specialist is a ''unit'' or organization which has registered as such with the Exchange under Article XXX, Rule 1. A co-specialist is an individual who has registered as such under Article XXX, Rule 1. *See* CHX Rules Article XXX, Rule 1, Interpretation and Policy .01.4(a).

[4] *See* CHX Rules Article IV, Rule 4.

[5] *See* CHX Rules Article XXX, Rule 1, Interpretation and Policy .01.2.

[6] In this context, ''in competition'' means that more than one specialist had applied to be the specialist in the issue.

[7] The Exchange stated its intention to have the new policy apply anytime there will not be another specialist assigned to the issue, such as if the security was to be returned to the cabinet, put in the cabinet for the first time, or traded by a lead primary market maker pursuant to CHX Rules Article XXXIV, Rule 3. *See* Amendment No. 2, *supra* note 1. Cabinet securities are those securities which the Board of Governors designates to be traded in the cabinet system because in the judgment of the Board such securities do not trade with sufficient frequency to warrant their retention in the specialist system. *See* CHX Rules Article XXVIII, Rule 6. For a more detailed explanation of the operation of the cabinet system, see CHX Rules Article XX, Rule 11.

[8] In this context, posting means that all specialists are put on notice that the security in question is available for reassignment. *See* CHX Rules Article XXX, Rule 1. Telephone conversation between David Rusoff, Attorney, Foley & Lardner, and Heather Seidel, Attorney, Division of Market Regulation, Commission, on July 24, 1997.

[9] 15 U.S.C. § 78f(b).

[10] In approving this rule, the Commission notes that it has considered the proposed rule's impact on efficiency, competition, and capital formation. 15 U.S.C. 78c(f).

number of specialists or co-specialists who register in additional securities. The report should also include data on (1) the rate of deregistration at the specialist's request, and (2) the number of specialists applying to register in securities that do not have a specialist already assigned, and compare that data for the pilot year to the prior year. In addition, the Commission requests that the CHX submit by July 8, 1998, any proposed rule change pursuant to Rule 19b–4 under the Act [11] to further extend or seek permanent approval of the pilot program.

IV. Conclusion

It is therefore ordered, pursuant to Section 19(b)(2) of the Act,[12] that the proposed rule change (SR–CHX–97–15) is approved on a one year pilot basis through September 8, 1998.

For the Commission, by the Division of Market Regulation, pursuant to delegated authority.[13]

Margaret H. McFarland,

Deputy Secretary.

[FR Doc. 97–24305 Filed 9–12–97; 8:45 am]

BILLING CODE 8010–01–M

[11] 17 CFR 200.19b–4.

[12] 15 U.S.C. § 78s(b)(2).

[13] 17 CFR 200.30–3(a)(12).

SECURITIES AND EXCHANGE COMMISSION

[Release No. 34–39031; File No. SR–DTC–97–07]

Self-Regulatory Organizations; The Depository Trust Company; Notice of Filing and Immediate Effectiveness of Proposed Rule Change Relating to Disclosure Requirements for Transactions Involving Inflation Indexed Securities Through the Institutional Delivery System

September 8, 1997.

Pursuant to Section 19(b)(1) [1] of the Securities Exchange Act of 1934 (''Act''), notice is hereby given that on May 19, 1997, The Depository Trust Company (''DTC'') filed with the Securities and Exchange Commission (''Commission'') the proposed rule change as described in Items I, II, and III below, which items have been prepared primarily by DTC. The Commission is publishing this notice to solicit comments from interested persons on the proposed rule change.

[1] 15 U.S.C. 78s(b)(1).

I. Self-Regulatory Organization's Statement of the Terms of Substance of the Proposed Rule Change

The purpose of the proposed rule change is to amend Section M of DTC's participant operating procedures in accordance with certain disclosure requirements for transactions involving inflation indexed securities processed through DTC's Institutional Delivery (''ID'') system.

II. Self-Regulatory Organization's Statement of the Purpose of, and Statutory Basis for, the Proposed Rule Change

In its filing with the Commission, DTC included statements concerning the purpose of and basis for the proposed rule change and discussed any comments it received on the proposed rule change. The text of these statements may be examined at the places specified in Item IV below. DTC has prepared summaries, set forth in sections (A), (B), and (C) below, of the most significant aspects of such statements.[2]

(A) Self-Regulatory Organization's Statement of the Purpose of, and Statutory Basis for, the Proposed Rule Change

PSA The Bond Market Trade Association (''PSA'') on behalf of its members and all other registered brokers and dealers, received no-action and interpretive relief from the Commission and the Treasury (collectively ''interpretive relief'') [3] regarding the application of certain regulations to inflation indexed securities issued by the U.S. Treasury Department (''Treasury''). The purpose of the proposed rule change is to enable broker-dealers that use DTC's ID system for generating confirmations for their customer transactions to comply with the disclosure requirements set forth in the interpretive relief.

The interpretative relief requires broker-dealers to disclose in confirmations for inflation indexed securities that yield to maturity may vary due to inflation adjustments or provide disclosure to similar effect. A broker-dealer using the ID system can enter data in the security type field identifying the security as an inflation indexed security by using a designated acronym (*i.e.*, ''ITS''). Under the proposed rule change, DTC will add procedures to its ID system to provide that when the designated acronym identifying an inflation indexed security appears in the security type field of the ID confirmation, the required disclosure will be deemed to be a part of the ID confirmation for that transaction.

The interpretative relief also requires confirmations involving inflation indexed securities for when-issued transactions and for transactions in the Treasury's Separate Trading of Registered Interest and Principal of Securities (''STRIPS'') program to disclose the real yield (*i.e.*, nominal yield not adjusted for inflation) for the securities.[4] Under the proposed rule change, a broker-dealer using the ID system to send confirmations for such transactions will be able to disclose the real yield by entering that figure either in the yield field or in the special instructions field of trade data submitted to the ID system.

DTC believes the proposed rule change is consistent with the requirements of Section 17A of the Act [5] and the rules and regulations thereunder because the proposed rule change will assure the safeguarding of securities and funds which are in the custody or control of DTC by facilitating the confirmation of transactions in inflation indexed securities through the use of DTC's ID system.

B. Self-Regulatory Organization's Statement on Burden on Competition

DTC perceives no impact on competition by reason of the proposed rule change.

(C) Self-Regulatory Organization's Statement on Comments on the Proposed Rule Change Received From Members, Participants or Others

The proposed rule change was developed through discussions with PSA acting on behalf of its members and with several participants. Written comments from DTC participants or others have not been solicited or received on the proposed rule change.

III. Date of Effectiveness of the Proposed Rule Change and Timing for Commission Action

The foregoing rule change has become effective pursuant to Section 19(b)(3)(A)(iii) [6] of the Act and pursuant

[2] The Commission has modified the text of the summaries prepared by DTC.

[3] Letter from Robert L.D. Colby, Deputy Director, Division of Market Regulation, Commission, to Paul Saltzman, Senior Vice President and General Counsel, PSA The Bond Market Association, (January 17, 1997); letter from Richard L. Gregg, Commissioner, Bureau of the Public Debt, Department of the Treasury, to Michael A. Macchiaroli, Associate Director, Division of Market Regulation, Commission (January 17, 1997).

[4] PSA The Bond Market Association Trading Practice Guidelines for Inflation Indexed Securities (December 18, 1996).

[5] 15 U.S.C. 78q–1.

[6] 15 U.S.C. 78s(b)(3)(A)(iii).

to Rule 19b–4(e)(4)[7] promulgated thereunder because the proposal effects a change in an existing service of a registered clearing agency that does not adversely affect the safeguarding of securities or funds in the custody or control of DTC or for which it is responsible and does not significantly affect the respective rights or obligations of DTC or persons using the service. At any time within sixty days of the filing of such rule change, the Commission may summarily abrogate such rule change if it appears to the Commission that such action is necessary or appropriate in the public interest, for the protection of investors, or otherwise in furtherance of the purposes of the Act.

On August 25, 1997, notice of filing of File No. SR–DTC–97–07 was incorrectly published in the **Federal Register** as a proposed rule change filed pursuant to Section 19(b)(2).[8] This notice of the proposed rule change supersedes that release and correctly publishes notice of filing of File No. SR–DTC–97–07 as a proposed rule change filed pursuant to Section 19(b)(3)(A). The proposed rule change became immediately effective upon filing with the Commission on May 19, 1997.

IV. Solicitation of Comments

Interested persons are invited to submit written data, views, and arguments concerning the foregoing. Persons making written submissions should file six copies thereof with the Secretary, Securities and Exchange Commission, 450 Fifth Street, NW., Washington, DC 20549. Copies of the submission, all subsequent amendments, all written statements with respect to the proposed rule change that are filed with the Commission,and all written communications relating to the proposed rule change between the Commission and any person, other than those that may be withheld from the public in accordance with the provisions of 5 U.S.C. 552, will be available for inspection and copying in the Commission's Public Reference Section, 450 Fifth Street, NW., Washington, DC 20549. Copies of such filing also will be available for inspection and copying at the principal office of DTC. All submissions should refer to File No. SR–DTC–97–07 and should be submitted by October 6, 1997.

[7] 17 CFR 240.19b–4(e)(4).

[8] Securities Exchange Act Release No. 38950 (August 19, 1997), 62 FR 44997.

For the Commission by the Division of Market Regulation, pursuant to delegated authority.[9]

Margaret H. McFarland,

Deputy Secretary.

[FR Doc. 97–24303 Filed 9–11–97; 8:45 am]

BILLING CODE 8010–01–M

[9] 17 CFR 200.30–3(a)(12).

SECURITIES AND EXCHANGE COMMISSION

[Release No. 34–39030; File No. SR–PHLX–97–25]

Self-Regulatory Organizations; Philadelphia Stock Exchange, Inc.; Order Granting Approval to Proposed Rule Change and Notice of Filing and Order Granting Accelerated Approval of Amendment No. 1 Thereto, Relating to Elimination of the Enhanced Parity Split for the Specialist in the 3D German Mark Foreign Currency Options

September 8, 1997.

I. Introduction

On May 29, 1997, the Philadelphia Stock Exchange, Inc. (''Phlx'' or ''Exchange'') submitted to the Securities and Exchange Commission (''SEC'' or ''Commission''), pursuant to Section 19(b)(1) of the Securities Exchange Act of 1934 (''Act'')[1] and Rule 19b–4 thereunder,[2] a proposed rule change to eliminate from Exchange Rule 1014(h) (''Rule'') the enhanced parity split for the specialist in the dollar denominated delivery German Mark (''3D'') foreign currency options (''FCOs'').

The proposed rule change was published for comment in the **Federal Register** on July 10, 1997.[3] No comments were received on the proposal. On August 6, 1997, the Phlx submitted Amendment No. 1 to the proposed rule change.[4] This order approves the proposal as amended.

II. Description of the Proposal

In January, 1995, the Exchange amended the Rule to adopt an enhanced split for its specialist in 3D FCOs[5] in order to encourage the specialist to make deeper markets to attract order flow.[6] The Rule provides that the Foreign Currency Option Committee (''the Committee'') would conduct a review of the entitlement to the enhanced parity split at the end of the first year and then every 6 months thereafter. Pursuant to the most recent review, the Committee determined to eliminate the enhanced split which was only applicable to this one product traded on the Foreign Currency Option Floor of the Exchange. The specialist in the product has not objected to the elimination of the enhanced split. In fact, the specialist firm trading this product has indicated that enhanced split is not particularly useful to the firm and that the firm does not generally take advantage of it.[7] In addition, the Exchange has represented that the order size in this product is generally not large enough to trigger the enhanced split.[8] Although the Exchange is proposing to eliminate the enhancement at this time, it represents it is continuing to study the potential use of enhanced splits for the Foreign Currency Option Floor on a broader basis.[9] By eliminating the current enhanced split, parity and priority will be determined in accordance with Exchange Rule 119 and the remainder of section (h) to Rule 1014.

III. Discussion

The Commission finds that the proposed rule change is consistent with the requirements of the Act and the rules and regulations thereunder applicable to a national securities exchange, and, in particular, with the requirements of Section 6(b).[10] Specifically, the Commission believes the proposal is consistent with the Section 6(b)(5)[11] requirements that the

[1] 15 U.S.C. 78s(b)(1).

[2] 17 CFR 240.19b–4.

[3] Securities Exchange Act Release No. 38808 (July 1, 1997), 62 FR 37111 (July 10, 1997).

[4] *See* letter from Michele R. Weisbaum, Vice President and Associate General Counsel, Phlx to David Sieradzki, Attorney, SEC, dated August 6, 1997 (''Amendment No. 1''). In Amendment No. 1, the Phlx proposed to amend Option Floor Procedure Advice B–7, Time Priority of Bids/Offers in Foreign Currency Options, to delete text describing the enhanced specialist split for 3D options.

[5] 3D FCOs are cash-settled, European-style, cash/spot FCO contracts on the German mark that trade in one-week and two-week expirations. *See* Securities Exchange Act Release No. 33732 (Mar. 8, 1994), 59 FR 12023 (Mar. 15, 1994).

[6] *See* Securities Exchange Act Release No. 35177 (Dec. 29, 1994), 60 FR 2419 (Jan 9, 1995) (''Original Split Approval Order'').

[7] *See* letter from Michele R. Weisbaum, Vice President and Associate General Counsel, Phlx to David Sieradzki, Attorney, SEC, dated June 30, 1997 (''Phlx Letter'').

[8] Telephone conversation between Michele R. Weisbaum, Vice President and Associate General Counsel, Phlx, James T. McHale, Special Counsel, SEC and David Sieradzki, Attorney, SEC (June 19, 1997). Rule 1014(h) provides that ''[t]his enhanced split will not apply where a customer bid/offer for under 100 contracts has time priority.''

[9] The Exchange represents that it is in the process of considering new and different types of parity splits that, if adopted, would be applicable to all products traded by specialists on the foreign currency option floor or at least to a broader range of specialist traded products. *See* Phlx Letter, *supra* note 7.

[10] 15 U.S.C. 78f(b).

[11] 15 U.S.C. 78f(b)(5).

rules of an exchange be designed to promote just and equitable principles of trade, to prevent fraudulent and manipulative acts, and, in general, to protect investors and the public interest.[12]

The Exchange has represented that the enhanced parity split for 3D FCOs is not frequently used and has not served as an effective means of attracting order flow to the Exchange. When the enhanced parity split for 3D FCOs was initially approved, the Commission stated that it was reasonable for the Exchange to grant these benefits to specialists as long as they did not unreasonably restrain competition or harm investors. In addition, the Commission believed that granting these benefits to specialists was within the business judgement of the Exchange.[13] Similarly, the Commission believes that it is within the business judgement of the Exchange to eliminate these benefits to specialists, provided that competition is not unreasonably restrained nor investors harmed. Accordingly, the Commission believes that it is reasonable for the Exchange to rescind the enhanced parity split and examine other potential methods of attracting order flow to the Exchange.

The Commission finds good cause for approving Amendment No. 1 to the proposed rule change prior to the thirtieth day after the date of publication of notice of filing thereof in the **Federal Register**. Amendment No. 1 does not change the nature of the proposal, but merely conforms Options Floor Procedure Advice B–7 to reflect the elimination of the enhanced specialist split for 3D FCOs. Further, the Commission notes that the original proposal was published for the full 21-day comment period and no comments were received by the Commission. Accordingly, the Commission believes it is appropriate to approve Amendment No. 1 to the Exchange's proposal on an accelerated basis.

IV. Solicitation of Comments

Interested persons are invited to submit written data, views and arguments concerning Amendment No. 1. Persons making written submissions should file six copies thereof with the Secretary, Securities and Exchange Commission, 450 Fifth Street, NW., Washington, DC 20549. Copies of the submission, all subsequent amendments, all written statements with respect to the proposed rule change that are filed with the Commission, and all written communications relating to the proposed rule change between the Commission and any person, other than those that may be withheld from the public in accordance with the provisions of 5 U.S.C. 552, will be available for inspection and copying at the Commission's Public Reference Room. Copies of such filing will also be available for inspection and copying at the principal office of the above-mentioned self-regulatory organization. All submissions should refer to File No. SR–Phlx–97–25 and should be submitted by October 6, 1997.

V. Conclusion

It is therefore ordered, pursuant to Section 19(b)(2) of the Act,[14] that the proposed rule change (SR–Phlx–97–25) is approved, as amended.

For the Commission, by the Division of Market Regulation, pursuant to delegated authority.[15]

Margaret H. McFarland,

Deputy Secretary.

[FR Doc. 97–24304 Filed 9–12–97; 8:45 am]

BILLING CODE 8010–01–M

[12] In approving this rule, the Commission has considered the proposed rule's impact on efficiency, competition, and capital formation. 15 U.S.C. 78c(f).

[13] *See* Original Split Approval Order, *supra* note 6.

[14] 15 U.S.C. 78s(b)(2).

[15] 17 CFR 200.30–3(a)(12).

DEPARTMENT OF TRANSPORTATION

Surface Transportation Board

[Finance Docket No. 32760]

Union Pacific Railroad Company—Control and Merger—Southern Pacific Transportation Company: Reno Mitigation Study, Preliminary Mitigation Plan

AGENCY: Surface Transportation Board, Transportation.

ACTION: Issuance of Preliminary Mitigation Plan (PMP), request for public comment, and notice of public meetings.

SUMMARY: The Surface Transportation Board's (Board) Section of Environmental Analysis (SEA) will issue the Preliminary Mitigation Plan (PMP) for the Reno, NV Mitigation Study on September 15, 1997, for public review and comment. On August 12, 1996, in Decision No. 44, the Board approved the Union Pacific/Southern Pacific merger. As part of its approval, the Board directed SEA to conduct a mitigation study to develop additional tailored environmental mitigation measures (beyond those already imposed in Decision No. 44) to address unique local conditions in Reno and Washoe County regarding the potential environmental impacts of increased rail traffic. The preliminary results of this study and SEA's preliminary recommendations for additional environmental mitigation measures are reflected in the PMP. SEA encourages public comment on the PMP during the 30-day review period, which will end on October 15, 1997. SEA will distribute copies of the PMP to interested parties. In addition, copies of the PMP will be available at the Reno and Sparks branches of the Washoe County Public Library, or by request by calling (202) 565–1539.

SEA will hold two public information meetings on October 9, 1997, to provide the public with further opportunity to comment on the PMP and receive additional information. SEA will consider all public comments and issue a Final Mitigation Plan (FMP) for public review and comment. Based on the PMP, FMP, and public comments, SEA will then make its final recommendations to the Board. The public information meetings will be held on October 9, 1997, at Reno City Hall, 490 South Center Street, Reno, NV. The afternoon meeting will include an informal open house from 1:30 p.m.–2:30 p.m., followed by a presentation and formal public meeting beginning at 2:30 p.m. The evening meeting will include an informal open house from 6:00 p.m.–7:00 p.m., and a formal public meeting beginning at 7:00 p.m.

Public comments should be submitted in writing (one original plus 10 copies), no later than October 15, 1997, to: Office of the Secretary, Case Control Unit, *Finance Docket No. 32760,* Surface Transportation Board, 1925 K Street, NW., Washington, DC 20423–0001. Mark the lower left hand corner of the envelope: Attention: Elaine K. Kaiser, Chief, Section of Environmental Analysis, Environmental Filing—Reno.

FOR FURTHER INFORMATION CONTACT: Harold McNulty, Section of Environmental Analysis, Room 500, Surface Transportation Board, 1925 K Street, NW., Washington, DC 20423, (202) 565–1539, TDD for the hearing impaired: (202) 565–1695.

By the Board, Elaine K. Kaiser, Chief, Section of Environmental Analysis.

Vernon A. Williams,

Secretary.

[FR Doc. 97–24406 Filed 9–12–97; 8:45 am]

BILLING CODE 4915–00–P

DEPARTMENT OF TRANSPORTATION

Surface Transportation Board

[Finance Docket No. 32760]

Union Pacific Railroad Company—Control and Merger—Southern Pacific Transportation Company: Wichita Mitigation Study, Preliminary Mitigation Plan

AGENCY: Surface Transportation Board, Transportation.

ACTION: Issuance of Preliminary Mitigation Plan (PMP), request for public comment, and notice of public meeting.

SUMMARY: The Surface Transportation Board's (Board) Section of Environmental Analysis (SEA) will issue the Preliminary Mitigation Plan (PMP) for the Wichita, KS Mitigation Study on September 15, 1997, for public review and comment. On August 12, 1996, in Decision No. 44, the Board approved the Union Pacific/Southern Pacific merger. As part of its approval, the Board directed SEA to conduct a mitigation study to develop additional tailored environmental mitigation measures (beyond those already imposed in Decision No. 44) to address unique local conditions in Wichita and Sedgwick County regarding the potential environmental impacts of increased rail traffic. The preliminary results of this study and SEA's preliminary recommendations for additional environmental mitigation measures are reflected in the PMP. SEA encourages public comments on the PMP during the 30-day review period, which will end on October 15, 1997. SEA will distribute copies of the PMP to interested parties. In addition, copies of the report will be available at the Wichita and Sedgwick County Library and Wichita State University Library, or by request by calling (202) 565–1530.

SEA will hold a public information meeting on September 30, 1997, to provide the public with an opportunity to comment on the PMP and receive additional information. SEA will consider all public comments and issue a Final Mitigation Plan (FMP) for public review and comment. Based on the PMP, FMP, and public comments, SEA will then make its final recommendations to the Board. The meeting will be held in the Mary Jane Teall Theater at the Century II Convention Center in Wichita. The meeting will include an informal open house from 6:00 p.m. to 7:00 p.m., and a formal public meeting beginning at 7:00 p.m.

Public comments should be submitted in writing (one original plus 10 copies), no later than October 15, 1997, to: Office of the Secretary, Case Control Unit, *Finance Docket No. 32760,* Surface Transportation Board, 1925 K Street, NW., Washington, DC 20423–0001. Mark the lower left hand corner of the envelope: Attention: Elaine K. Kaiser, Chief, Section of Environmental Analysis, Environmental Filing—Wichita.

FOR FURTHER INFORMATION CONTACT: Michael Dalton, Section of Environmental Analysis, Room 500, Surface Transportation Board, 1925 K Street, NW., Washington, DC 20423, (202) 565–1530, TDD for the hearing impaired: (202) 565–1695.

By the Board, Elaine K. Kaiser, Chief, Section of Environmental Analysis.

Vernon A. Williams,

Secretary.

[FR Doc. 97–24407 Filed 9–12–97; 8:45 am]

BILLING CODE 4915–00–P

DEPARTMENT OF TRANSPORTATION

Surface Transportation Board

[STB Docket No. AB–55 (Sub-No. 549X)]

CSX Transportation, Inc.—Abandonment Exemption—in Mecklenburg County, NC

On August 4, 1997, CSX Transportation, Inc. (CSXT) filed with the Surface Transportation Board (Board) a petition under 49 U.S.C. 10502 for exemption from the provisions of 49 U.S.C. 10903 to abandon a portion of its Florence Service Lane, Charlotte Subdivision, extending from milepost SFC–1.52 near State Street to milepost SFC–0.82 at the end of track at Cedar Street Yard, which traverses U.S. Postal Service Zip Code 28202, a distance of 0.70 miles, in Charlotte, Mecklenburg County, NC.

The line does not contain federally granted rights-of-way. Any documentation in CSXT's possession will be made available promptly to those requesting it. The interest of railroad employees will be protected by the conditions set forth in *Oregon Short Line R. Co.—Abandonment—Goshen,* 360 I.C.C. 91 (1979).

By issuance of this notice, the Board is instituting an exemption proceeding pursuant to 49 U.S.C. 10502(b). A final decision will be issued by November 21, 1997.

Any offer of financial assistance under 49 CFR 1152.27(b)(2) will be due no later than 10 days after service of a decision granting the petition for exemption. Each offer of financial assistance must be accompanied by a $900 filing fee. *See* 49 CFR 1002.2(f)(25).

All interested persons should be aware that, following abandonment of rail service and salvage of the line, the line may be suitable for other public use, including interim trail use. Any request for a public use condition under 49 CFR 1152.28 or for trail use/rail banking under 49 CFR 1152.29 will be due no later than October 6, 1997. Each trail use request must be accompanied by a $150 filing fee. *See* 49 CFR 1002.2(f)(27).

All filings in response to this notice must refer to STB Docket No. AB–55 (Sub-No. 549X) and must be sent to: (1) Surface Transportation Board, Office of the Secretary, Case Control Unit, 1925 K Street, N.W., Washington, DC 20423–0001; and (2) Charles M. Rosenberger, 500 Water Street—J150, Jacksonville, FL 32202.

Persons seeking further information concerning abandonment procedures may contact the Board's Office of Public Services at (202) 565–1592 or refer to the full abandonment or discontinuance regulations at 49 CFR part 1152. Questions concerning environmental issues may be directed to the Board's Section of Environmental Analysis (SEA) at (202) 565–1545. [TDD for the hearing impaired is available at (202) 565–1695.]

An environmental assessment (EA) (or environmental impact statement (EIS), if necessary), prepared by SEA will be served upon all parties of record and upon any agencies or other persons who commented during its preparation. Other interested persons may contact SEA to obtain a copy of the EA (or EIS). EAs in these abandonment proceedings normally will be made available within 60 days of the filing of the petition. The deadline for submission of comments on the EA will generally be within 30 days of its service.

Decided: September 9, 1997.

By the Board, David M. Konschnik, Director, Office of Proceedings.

Vernon A. Williams,

Secretary.

[FR Doc. 97–24408 Filed 9–12–97; 8:45 am]

BILLING CODE 4915–00–P

DEPARTMENT OF THE TREASURY

Submission for OMB Review; Comment Request

September 5, 1997.

The Department of Treasury has submitted the following public

information collection requirement(s) to OMB for review and clearance under the Paperwork Reduction Act of 1995, Pub. L. 104–13. Copies of the submission(s) may be obtained by calling the Treasury Bureau Clearance Officer listed. Comments regarding this information collection should be addressed to the OMB reviewer listed and to the Treasury Department Clearance Officer, Department of the Treasury, Room 2110, 1425 New York Avenue, NW., Washington, DC 20220.

Bureau of Alcohol, Tobacco and Firearms (BATF)

OMB Number: 1512–0021.
Form Number: ATF F 4587 (5330.4).
Type of Review: Extension.
Title: Application to Register as an Importer of U.S. Munitions Import List Articles.
Description: Filing of this form with ATF and payment of the associated fee authorizes the registrant to import U.S. Munitions Import List articles, such as firearms, ammunition, military vehicles, aircraft, vessels of war. etc. Maintenance of this form by ATF allows determinations about the eligibility of an entity to import such articles into the U.S.
Respondents: Business or other for-profit.
Estimated Number of Respondents: 300.
Estimated Burden Hours Per Respondent: 30 minutes.
Frequency of Response: Other (optionally for 1 to 5 years).
Estimated Total Reporting Burden: 150 hours.

OMB Number: 1512–0043.
Form Number: ATF F 8, Part II.
Type of Review: Extension.
Title: Renewal of Firearms License.
Description: This form is filed by the licensee desiring to renew a federal firearms license. It is used to identify the applicant, locate the business premises, identify the type of business conducted, and determine the eligibility of the applicant.
Respondents: Individuals or households, Business or other for-profit.
Estimated Number of Respondents: 41,300.
Estimated Burden Hours Per Respondent: 20 minutes.
Frequency of Response: Other (once every 3 years).
Estimated Total Reporting Burden: 13,629 hours.

OMB Number: 1512–0502.
Recordkeeping Requirement ID Number: ATF REC 5210/12 and ATF REC 5210/1.
Type of Review: Extension.
Title: Tobacco Products Manufacturers—Notice for Tobacco Products.
Description: Tobacco products manufacturers maintain a record system showing tobacco and tobacco product receipts, production and dispositions whichsupportt removals subject to tax; transfers in bond; and inventory records. These records are vital to tax enforcement.
Respondents: Business or other for-profit.
Estimated Number of Respondents: 108.
Estimated Burden Hours Per Respondent: None (records are usual and customary requirements.
Frequency of Response: Other.
Estimated Total Reporting Burden: 1 hour.
Clearance Officer: Robert N. Hogarth, (202) 927–8930, Bureau of Alcohol, Tobacco and Firearms, Room 3200, 650 Massachusetts Avenue, NW., Washington, DC 20226.
OMB Reviewer: Alexander T. Hunt (202) 395–7860, Office of Management and Budget, Room 10202, New Executive Office Building, Washington, DC 20503.

Lois K. Holland,
Departmental Reports Management Officer.
[FR Doc. 97–24313 Filed 9–12–97; 8:45 am]
BILLING CODE 4810–03–P

DEPARTMENT OF THE TREASURY

Submission for OMB Review; Comment Request

September 5, 1997.

The Department of Treasury has submitted the following public information collection requirement(s) to OMB for review and clearance under the Paperwork Reduction Act of 1995, Pub. L. 104–13. Copies of the submission(s) may be obtained by calling the Treasury Bureau Clearance Officer listed. Comments regarding this information collection should be addressed to the OMB reviewer listed and to the Treasury Department Clearance Officer, Department of the Treasury, Room 2110, 1425 New York Avenue, NW., Washington, DC 20220.

U.S. Customs Service (CUS)

OMB Number: 1515–0013.
Form Number: CF 3171.
Type of Review: Extension.
Title: Application-Permit-Special License Unlading/Lading, Overtime Services.
Description: Customs Form 3171 is used by commercial carriers and importers as a request for permission to unlade imported merchandise, baggage, or passengers and for overtime services of Customs officers in connection with lading or unlading of merchandise, or the entry or clearance of a vessel, including the boarding of a vessel for preliminary supplies, ship's stores, sea stores, or equipment not to be reladen, which is subject to free or duty-paid entry.
Respondents: Business or other for-profit, Not-for-profit institutions.
Estimated Number of Respondents: 1,500.
Estimated Burden Hours Per Respondent: 6 minutes.
Frequency of Response: On occasion.
Estimated Total Reporting Burden: 39,900 hours.

OMB Number: 1515–0022.
Form Number: CF 4315.
Type of Review: Extension.
Title: Application for Allowance in Duties.
Description: This collection is required by the Customs Service in instances of claims of damaged or defective merchandise on which an allowance in duty is made in the liquidation of the entry. The information is used to substantiate importers claims for such duty allowances.
Respondents: Business or other for-profit, Not-for-profit institutions.
Estimated Number of Respondents: 12,000.
Estimated Burden Hours Per Respondent: 8 minutes.
Frequency of Response: On occasion.
Estimated Total Reporting Burden: 1,600 hours.
Clearance Officer: J. Edgar Nichols, (202) 927–1426, U.S. Customs Service, Printing and Records Management Branch, Room 6216, 1301 Constitution Avenue, NW., Washington, DC 20229.
OMB Reviewer: Alexander T. Hunt, (202) 395–7860, Office of Management and Budget, Room 10202, New Executive Office Building, Washington, DC 20503.

Lois K. Holland,
Departmental Reports Management Officer.
[FR Doc. 97–24314 Filed 9–12–97; 8:45 am]
BILLING CODE 4820–02–P

DEPARTMENT OF THE TREASURY

Submission to OMB for Review; Comment Request

September 5, 1997.

The Department of Treasury has submitted the following public information collection requirement(s) to OMB for review and clearance under the Paperwork Reduction Act of 1995, Pub.

L. 104–13. Copies of the submission(s) may be obtained by calling the Treasury Bureau Clearance Officer listed. Comments regarding this information collection should be addressed to the OMB reviewer listed and to the Treasury Department Clearance Officer, Department of the Treasury, Room 2110, 1425 New York Avenue, NW., Washington, DC 20220.

Internal Revenue Service (IRS)

OMB Number: 1545–0217

Form Number: IRS Forms 5735 and Schedule P (Form 5735).

Type of Review: Extension.

Title: Possessions Corporation Tax Credit (Under Sections 936 and 30A) (5735); and Allocation of Income and Expenses Under Section 936(h)(5) (Schedule P).

Description: Form 5735 is used to compute the possessions tax credit under sections 936 and 30A. Schedule P is used by corporations that elect to share the income or expenses with their affiliates. Each form provides the IRS with information to determine if the corporations have correctly computed the tax credit and the cost-sharing or profit-split method.

Respondents: Business or other for-profit.

Estimated Number of Respondents/Recordkeepers: 1,371.

Estimated Burden Hours Per Respondent/Recordkeeper:

Form	Recordkeeping	Learning about the law of the form	Preparing the form	Copying, assembling, and sending the form to the IRS
5735	20 hr., 34 min	3 hr., 38 min	5 hr., 4 min	16 min.
Schedule P (5735)	10 hr., 2 min	1 hr., 56 min	4 hr., 2 min	32 min.

Frequency of Response: Annually.

Estimated Total Reporting/Recordkeeping Burden: 32,713 hours.

OMB Number: 1545–1016.

Form Number: IRS Form 8613.

Type of Review: Extension.

Title: Return of Excise Tax on Undistributed Income of Regulated Investment Companies.

Description: Form 8613 is used by regulated investment companies to compute and pay the excise tax on undistributed income imposed under section 4982. IRS uses the information to verify that the correct amount of tax has been reported.

Respondents: Business or other for-profit.

Estimated Number of Respondents/Recordkeepers: 1,500.

Estimated Burden Hours Per Respondent/Recordkeeper:

Form	Recordkeeping	Learning about the law or the form	Preparing and sending the form
5735	6 hr., 42 min	2 hr., 29 min	2 hr., 43 min.

Frequency of Response: Annually.

Estimated Total Reporting/Recordkeeping Burden: 17,835 hours.

Clearance Officer: Garrick Shear (202) 622–3869, Internal Revenue Service, Room 5571, 1111 Constitution Avenue, NW, Washington, DC 20224.

OMB Reviewer: Alexander T. Hunt (202) 395–7860, Office of Management and Budget, Room 10226, New Executive Office Building, Washington, DC 20503.

Lois K. Holland,

Departmental Reports Management Officer.

[FR Doc. 97–24315 Filed 9–12–97; 8:45 am]

BILLING CODE 4830–01–P

DEPARTMENT OF THE TREASURY

Submission to OMB for Review; Comment Request

September 5, 1997.

The Department of Treasury has submitted the following public information collection requirement(s) to OMB for review and clearance under the Paperwork Reduction Act of 1995, Pub. L. 104–13. Copies of the submission(s) may be obtained by calling the Treasury Bureau Clearance Officer listed. Comments regarding this information collection should be addressed to the OMB reviewer listed and to the Treasury Department Clearance Officer, Department of the Treasury, Room 2110, 1425 New York Avenue, NW., Washington, DC 20220.

Internal Revenue Service (IRS)

OMB Number: 1545–0090.

Form Number: IRS Forms 1040–SS, 1040–PR, and Anejo H–PR (Form 1040–PR).

Type of Review: Extension.

Title: U.S. Self-Employment Tax Return (1040–SS);

Planilla Para La Declaracion De La Contribucion Federal Sobre El Trabajo Por Cuenta Propia-Puerto Rico (1040–PR); and

Contribuciones Sobre El Empleo De Empleados Domesticos (Anejo H–PR).

Description: Form 1040–SS (Virgin Islands, Guam, American Samoa, and the Northern Mariana Islands) and 1040–PR (Puerto Rico) are used by self-employed individuals to figure and report self-employment tax under Internal Revenue Code (IRC) chapter 2 of Subtitle A, and provide credit to the taxpayer's social security account. Anejo H–PR (Form 1040–PR) is used to compute household employment taxes.

Respondents: Individuals or households, Business or other for-profit, Farms.

Estimated Number of Respondents/Recordkeepers: 56,400.

Estimated Burden Hours Per Respondent/Recordkeeper:

Form	Recordkeeping	Learning about the law of the form	Preparing the form	Copying, assembling, and sending the form to the IRS
1040–SS	7 hr., 19 min	24 min	2 hr., 36 min	49 min.
1040–PR	6 hr., 46 min	37 min	2 hr., 23 min	49 min.
Anejo H–PR (Form 1040–PR)	33 min	37 min	44 min	35 min.

Frequency of Response: Annually.

Estimated Total Reporting/Recordkeeping Burden: 581, 052 hours.

OMB Number: 1545–0118.

Form Number: IRS Form 1099–PATR.

Type of Review: Extension.

Title: Taxable Distributions Received From Cooperatives.

Description: Form 1099–PATR is used to report patronage dividends paid by cooperatives (Internal Revenue Code (IRC) section 6044). The information is used by IRS to verify reporting compliance on the part of the recipient.

Respondents: Business or other for-profit.

Estimated Number of Respondents/Recordkeepers: 4,200.

Estimated Burden Hours Per Respondent/Recordkeeper: 11 minutes.

Frequency of Response: Annually.

Estimated Total Reporting/Recordkeeping Burden: 372,615 hours.

OMB Number: 1545–0140.

Form Number: IRS Forms 2210 and 2210–F.

Type of Review: Extension.

Title: Underpayment of Estimated Tax by Individuals, Estates and Trusts (2110); and Underpayment of Estimated Tax by Farmers and Fishermen (2210–F).

Description: Internal Revenue Code section 6654 imposes a penalty for failure to pay estimated tax. These forms are used by taxpayers to determine whether they are subject to the penalty and to compute the penalty if it applies. The Service uses this information to determine whether the taxpayer is subject to the penalty, and to verify the penalty amount.

Respondents: Individuals or households, Business or other for-profit, Farms.

Estimated Number of Respondents/Recordkeepers: 900,000.

Estimated Burden Hours Per Respondent/Recordkeeper:

Form	Recordkeeping	Learning about the law of the form	Preparing the form	Copying, assembling, and sending the form to the IRS
2210 Short	7 min	5 min	29 min	20 min
2210 Long	13 min	40 min	2 hr., 15 min	46 min
2210–F	33 min	10 min	20 min	20 min

Frequency of Response: Annually.

Estimated Total Reporting/Recordkeeping Burden: 2,520,000 hours.

OMB Number: 1545–0142.

Form Number: IRS Form 2220.

Type of Review: Extension.

Title: Underpayment of Estimated Tax by Corporations.

Description: Form 2220 is used by corporations to determine whether they are subject to the penalty for underpayment of estimated tax and, if so, the amount of the penalty. The IRS uses Form 2220 to determine if the penalty was correctly computed.

Respondents: Business or other for-profit.

Estimated Number of Respondents/Recordkeepers: 702,000.

Estimated Burden Hours Per Respondent/Recordkeeper:

Form	Recordkeeping	Learning about the law or the form	Preparing and sending the form to the IRS
2220	28 hr., 13 min.	1 hr., 0 min.	1 hr., 30 min.
2220, Sched A, Part I	11 hr., 14 min.	12 min.	23 min.
2220, Sched A, Part II	23 hr., 26 min.		23 min.
2220, Sched A, Part III	5 hr., 16 min.		5 min.

Frequency of Response: Annually.

Estimated Total Reporting/Recordkeeping Burden: 21,617,627 hours.

OMB Number: 1545–0175.

Form Number: IRS Form 4626.

Type of Review: Extension.

Title: Alternative Minimum Tax—Corporations.

Description: Form 4626 is used by corporations to calculate their alternative minimum tax.

Respondents: Business or other for-profit.

Estimated Number of Respondents/Recordkeepers: 100,000.

Estimated Burden Hours Per Respondent/Recordkeeper:

Form	Recordkeeping	Learning about the law or the form	Preparing and sending the form to the IRS
Form 4626	18 hr., 25 min	14 hr., 42 min	15 hr., 39 min.

Frequency of Response: Annually.

Estimated Total Reporting/Recordkeeping Burden: 4,876,000 hours.

OMB Number: 1545–0935.

Form Number: IRS Form 1120-FSC and Schedule P (Form 1120-FSC).

Type of Review: Revision.

Title: U.S. Income Tax Return of a Foreign Sales Corporation (1120-FSC); and Transfer Price or Commission (Schedule P).

Description: Form 1120-FSC is filed by foreign corporations that have elected to be FSCs or small FSCs. The FSC uses Form 1120-FSC to report income and expenses and to figure its tax liability. IRS uses Form 1120-FSC and Schedule P (Form 1120-FSC) to determine whether the FSC has correctly reported its income and expenses and figured its tax liability correctly.

Respondents: Business or other for-profit.

Estimated Number of Respondents/Recordkeepers: 5,000.

Estimated Burden Hours Per Respondent/Recordkeeper:

Form	Recordkeeping	Learning about the law or the form	Preparing and sending the form to the IRS
1120–FSC	92 hr., 33 min	17 hr., 54 min	35 hr., 47 min.
Schedule P (1120–FSC)	9 hr., 34 min	1 hr., 29 min	1 hr., 43 min.

Frequency of Response: Annually.

Estimated Total Reporting/Recordkeeping Burden: 1,050,650 hours.

OMB Number: 1545–0975.

Form Number: IRS Form 1120–W.

Type of Review: Extension.

Title: Estimated Tax for Corporations.

Description: Form 1120–W is used by corporations to figure estimated tax liability and the amount of each installment payment. Form 1120–W is a worksheet only. It is not to be filed with the Internal Revenue Service.

Respondents: Business or other for-profit.

Estimated Number of Respondents/Recordkeepers: 900,000.

Estimated Burden Hours Per Respondent/Recordkeeper:

Form	Recordkeeping	Learning about the law or the form	Preparing the form
1120–W	7 hr., 25 min	1 hr., 53 min	2 hr., 5 min
1120–W, Schedule A (Pt. I)	11 hr., 14 min	12 min	23 min.
1120–W, Schedule A (Pt. II)	23 hr., 26 min		23 min.
1120–W, Schedule A (Pt. III)	5 hr., 16 min		5 min.

Frequency of Response: Annually.

Estimated Total Reporting/Recordkeeping Burden: 10,303,188 hours.

Clearance Officer: Garrick Shear (202) 622–3869, Internal Revenue Service, Room 5571, 1111 Constitution Avenue, NW, Washington, DC 20224.

OMB Reviewer: Alexander T. Hunt (202) 395–7860, Office of Management and Budget, Room 10226, New Executive Office Building, Washington, DC 20503.

Lois K. Holland,

Departmental Reports Management Officer.

[FR Doc. 97–24316 Filed 9–12–97; 8:45 am]

BILLING CODE 4830–01–P

DEPARTMENT OF THE TREASURY

Submission for OMB Review; Comment Request

September 4, 1997.

The Department of Treasury has submitted the following public information collection requirement(s) to OMB for review and clearance under the Paperwork Reduction Act of 1995, Pub. L. 104–13. Copies of the submission(s) may be obtained by calling the Treasury Bureau Clearance Officer listed. Comments regarding this information collection should be addressed to the OMB reviewer listed and to the Treasury Department Clearance Officer, Department of the Treasury, Room 2110, 1425 New York Avenue, NW., Washington, DC 20220.

Special Request

In order to conduct the survey described below during September–October 1997, the Department of the Treasury is requesting that the Office of Management and Budget (OMB) review and approve this information collection by September 16, 1997. To obtain a copy of this study, please contact the Internal Revenue Service Clearance Officer at the address listed below.

Internal Revenue Service (IRS)

OMB Number: 1545–1349.

Project Number: SOI–36.

Type of Review: Revision.

Title: 1997 Refund Release Application Customer Satisfaction Survey.

Description: The Internal Revenue Service has developed the automated

Refund Release Telephone Application. The application allows taxpayers to provide vital information about their individual tax account in order for the IRS to release a refund check. The process is completed interactively, without customer service representatives (CSR) involvement. The purpose of the survey is to assess the level of ease and satisfaction with using the Refund Trace application.

Respondents: Individuals or households.

Estimated Number of Respondents: 882.

Estimated Burden Hours Per Response: 1 minute.

Frequency of Response: Other (one-time only).

Estimated Total Reporting Burden: 15 hours.

Clearance Officer: Garrick Shear (202) 622–3869, Internal Revenue Service, Room 5571, 1111 Constitution Avenue, N.W., Washington, DC 20224.

OMB Reviewer: Alexander T. Hunt (202) 395–7860, Office of Management and Budget, Room 10226, New Executive Office Building, Washington, DC 20503.

Lois K. Holland,

Departmental Reports Management Officer.

[FR Doc. 97–24317 Filed 9–12–97; 8:45 am]

BILLING CODE 4830–01–P

DEPARTMENT OF THE TREASURY

Submission for OMB Review; Comment Request

September 4, 1997.

The Department of Treasury has submitted the following public information collection requirement(s) to OMB for review and clearance under the Paperwork Reduction Act of 1995, Pub. L. 104–13. Copies of the submission(s) may be obtained by calling the Treasury Bureau Clearance Officer listed. Comments regarding this information collection should be addressed to the OMB reviewer listed and to the Treasury Department Clearance Officer, Department of the Treasury, Room 2110, 1425 New York Avenue, NW., Washington, DC 20220.

Special Request

In order to conduct the survey described below during September-October 1997, the Department of the Treasury is requesting that the Office of Management and Budget (OMB) review and approve this information collection by September 16, 1997. To obtain a copy of this study, please contact the Internal Revenue Service Clearance Officer at the address listed below.

Internal Revenue Service (IRS)

OMB Number: 1545–1349.

Project Number: SOI–35.

Type of Review: Revision.

Title: 1997 Refund Trace Application Customer Satisfaction Survey.

Description: The Internal Revenue Service has developed the automated Refund Trace Telephone Application. The application allows taxpayers to file claims for lost, stolen, or destroyed refund interactively, without customer service representatives (CSR) involvement. The purpose of the survey is to assess the level of ease and satisfaction with using the Refund Trace application.

Respondents: Individuals or households.

Estimated Number of Respondents: 882.

Estimated Burden Hours Per Response: 1 minute.

Frequency of Response: Other (one-time only).

Estimated Total Reporting Burden: 15 hours.

Clearance Officer: Garrick Shear (202) 622–3869 Internal Revenue Service Room 5571 1111 Constitution Avenue, N.W. Washington, DC 20224.

OMB Reviewer: Alexander T. Hunt (202) 395–7860 Office of Management and Budget Room 10226, New Executive Office Building Washington, DC 20503.

Lois K. Holland,

Departmental Reports Management Officer.

[FR Doc. 97–24318 Filed 9–12–97; 8:45 am]

BILLING CODE 4830–01–P

DEPARTMENT OF THE TREASURY

Submission for OMB Review; Comment Request

September 4, 1997.

The Department of Treasury has submitted the following public information collection requirement(s) to OMB for review and clearance under the Paperwork Reduction Act of 1995, Pub. L. 104–13. Copies of the submission(s) may be obtained by calling the Treasury Bureau Clearance Officer listed. Comments regarding this information collection should be addressed to the OMB reviewer listed and to the Treasury Department Clearance Officer, Department of the Treasury, Room 2110, 1425 New York Avenue, NW., Washington, DC 20220.

Special Request

In order to conduct the survey described below during September–October 1997, the Department of the Treasury is requesting that the Office of Management and Budget (OMB) review and approve this information collection by September 16, 1997. To obtain a copy of this study, please contact the Internal Revenue Service Clearance Officer at the address listed below.

Internal Revenue Service (IRS)

OMB Number: 1545–1349.

Project Number: SOI–34.

Type of Review: Revision.

Title: 1997 View Credit Application Customer Satisfaction Survey.

Description: The Internal Revenue Service has developed the automated View Credit Telephone Application. The application allows taxpayers to research payments posted to their individual tax collection account interactively, without customer service representative (CSR) involvement. The purpose of the survey is to assess the level of ease and satisfaction with using the View Credit application.

Respondents: Individuals or households.

Estimated Number of Respondents: 1260.

Estimated Burden Hours Per Response: 1 minute.

Frequency of Response: Other (one-time only).

Estimated Total Reporting Burden: 21 hours.

Clearance Officer: Garrick Shear (202) 622–3869 Internal Revenue Service, Room 5571, 1111 Constitution Avenue, N.W. Washington, DC 20224.

OMB Reviewer: Alexander T. Hunt (202) 395–7860 Office of Management and Budget, Room 10226, New Executive Office Building, Washington, DC 20503.

Lois K. Holland,

Departmental Reports Management Officer.

[FR Doc. 97–24319 Filed 9–12–97; 8:45 am]

BILLING CODE 4830–01–P

DEPARTMENT OF THE TREASURY

Submission for OMB Review; Comment Request

September 4, 1997

The Department of Treasury has submitted the following public information collection requirement(s) to OMB for review and clearance under the Paperwork Reduction Act of 1995, Pub. L. 104–13. Copies of the submission(s) may be obtained by calling the Treasury Bureau Clearance Officer listed. Comments regarding this information collection should be addressed to the OMB reviewer listed and to the Treasury Department Clearance Officer, Department of the Treasury, Room 2110, 1425 New York Avenue, NW., Washington, DC 20220.

Special Request

In order to conduct the survey described below during September–October 1997, the Department of the Treasury is requesting that the Office of Management and Budget (OMB) review and approve this information collection by September 16, 1997. To obtain a copy of this study, please contact the Internal Revenue Service Clearance Officer at the address listed below.

Internal Revenue Service (IRS)

OMB Number: 1545–1349.
Project Number: SOI–33.
Type of Review: Revision.
Title: 1997 View Debit Application Customer Satisfaction Survey.
Description: The Internal Revenue Service has developed the automated View Debit Telephone Application. The application allows taxpayers to hear a summary of detailed information pertaining to their individual tax collection account interactively, without customer service representative (CSR) involvement. The purpose of the survey is to assess the level of ease and satisfaction with using the View Debit application.
Respondents: Individuals or households.
Estimated Number of Respondents: 1260.
Estimated Burden Hours Per Response: 1 minute.
Frequency of Response: Other (one-time only).
Estimated Total Reporting Burden: 21 hours.
Clearance Officer: Garrick Shear (202) 622–3869, Internal Revenue Service, Room 5571, 1111 Constitution Avenue, N.W., Washington, DC 20224.
OMB Reviewer: Alexander T. Hunt (202) 395–7860, Office of Management and Budget, Room 10226, New Executive Office Building, Washington, DC 20503.

Lois K. Holland,

Departmental Reports Management Officer.

[FR Doc. 97–24320 Filed 9–12–97; 8:45 am]

BILLING CODE 4830–01–P

DEPARTMENT OF THE TREASURY

Customs Service

List of Foreign Entities Violating Textile Transshipment and Country of Origin Rules

AGENCY: U.S. Customs Service, Department of the Treasury.

ACTION: General notice.

SUMMARY: This document notifies the public of foreign entities which have been issued a penalty claim under § 592 of the Tariff Act, for certain violations of the customs laws. This list is authorized to be published by § 333 of the Uruguay Round Agreements Act.

FOR FURTHER INFORMATION CONTACT: For information regarding any of the operational aspects, contact Michael Compeau, Branch Chief, Seizures and Penalties Division, at 202–927–0762. For information regarding any of the legal aspects, contact Ellen McClain, Office of Chief Counsel, at 202–927–6900.

SUPPLEMENTARY INFORMATION:

Background

Section 333 of the Uruguay Round Agreements Act (URAA)(Public Law 103–465, 108 Stat. 4809)(signed December 12, 1994), entitled Textile Transshipments, amended Part V of title IV of the Tariff Act of 1930 by creating a § 592A (19 U.S.C. 1592A), which authorizes the Secretary of the Treasury to publish in the **Federal Register**, on a biannual basis, a list of the names of any producers, manufacturers, suppliers, sellers, exporters, or other persons located outside the Customs territory of the United States, when these entities have been issued a penalty claim under § 592 of the Tariff Act, for certain violations of the customs laws, provided that certain conditions are satisfied.

The violations of the Customs laws referred to above are the following: (1) Using documentation, or providing documentation subsequently used by the importer of record, which indicates a false or fraudulent country of origin or source of textile or apparel products; (2) Using counterfeit visas, licenses, permits, bills of lading, or similar documentation, or providing counterfeit visas, licenses, permits, bills of lading, or similar documentation that is subsequently used by the importer of record, with respect to the entry into the customs territory of the United States of textile or apparel products; (3) Manufacturing, producing, supplying, or selling textile or apparel products which are falsely or fraudulently labeled as to country of origin or source; and (4) Engaging in practices which aid or abet the transshipment, through a country other than the country of origin, of textile or apparel products in a manner which conceals the true origin of the textile or apparel products or permits the evasion of quotas on, or voluntary restraint agreements with respect to, imports of textile or apparel products.

If a penalty claim has been issued with respect to any of the above violations, and no petition in response to the claim has been filed, the name of the party to whom the penalty claim was issued will appear on the list. If a petition, supplemental petition or second supplemental petition for relief from the penalty claim is submitted under 19 U.S.C. 1618, in accord with the time periods established by §§ 171.32 and 171.33, Customs Regulations (19 CFR 171.32, 171.33) and the petition is subsequently denied or the penalty is mitigated, and no further petition, if allowed, is received within 30 days of the denial or allowance of mitigation, then the administrative action shall be deemed to be final and administrative remedies will be deemed to be exhausted. Consequently, the name of the party to whom the penalty claim was issued will appear on the list. However, provision is made for an appeal to the Secretary of the Treasury by the person named on the list, for the removal of its name from the list. If the Secretary finds that such person or entity has not committed any of the enumerated violations for a period of not less than 3 years after the date on which the person or entity's name was published, the name will be removed from the list as of the next publication of the list.

Reasonable Care Required

Section 592A also requires any importer of record entering, introducing, or attempting to introduce into the commerce of the United States textile or apparel products that were either directly or indirectly produced, manufactured, supplied, sold, exported, or transported by such named person to show, to the satisfaction of the Secretary, that such importer has exercised reasonable care to ensure that the textile or apparel products are accompanied by documentation, packaging, and labeling that are accurate as to its origin. Reliance solely upon information regarding the imported product from a person named on the list is clearly not the exercise of reasonable care. Thus, the textile and apparel importers who have some commercial relationship with one or more of the listed parties must exercise a degree of reasonable care in ensuring that the documentation covering the imported merchandise, as well as its packaging and labeling, is accurate as to the country of origin of the merchandise. This degree of reasonable care must rely on more than information supplied by the named party.

In meeting the reasonable care standard when importing textile or apparel products and when dealing with a party named on the list published pursuant to § 592A of the Tariff Act of 1930, an importer should consider the following questions in attempting to

ensure that the documentation, packaging, and labeling is accurate as to the country of origin of the imported merchandise. The list of questions is not exhaustive but is illustrative.

(1) Has the importer had a prior relationship with the named party?

(2) Has the importer had any detentions and/or seizures of textile or apparel products that were directly or indirectly produced, supplied, or transported by the named party?

(3) Has the importer visited the company's premises and ascertained that the company has the capacity to produce the merchandise?

(4) Where a claim of an origin conferring process is made in accordance with 19 CFR 102.21, has the importer ascertained that the named party actually performed the required process?

(5) Is the named party operating from the same country as is represented by that party on the documentation, packaging or labeling?

(6) Have quotas for the imported merchandise closed or are they nearing closing from the main producer countries for this commodity?

(7) What is the history of this country regarding this commodity?

(8) Have you asked questions of your supplier regarding the origin of the product?

(9) Where the importation is accompanied by a visa, permit, or license, has the importer verified with the supplier or manufacturer that the visa, permit, and/or license is both valid and accurate as to its origin? Has the importer scrutinized the visa, permit or license as to any irregularities that would call its authenticity into question?

The law authorizes a biannual publication of the names of the foreign entities. On April 1, 1997, Customs published a Notice in the **Federal Register** (62 FR 15563) which identified 14 (fourteen) entities which fell within the purview of § 592A of the Tariff Act of 1930.

592A List

For the period ending September 30, 1997, Customs has identified 16 (sixteen) foreign entities that fall within the purview of § 592A of the Tariff Act of 1930. This list reflects the addition of 2 new entities to the 14 entities named on the list published on April 1, 1997. The parties on the current list were assessed a penalty claim under 19 U.S.C. 1592, for one or more of the four above-described violations. The administrative penalty action was concluded against the parties by one of the actions noted above as having terminated the administrative process.

The names and addresses of the 16 foreign parties which have been assessed penalties by Customs for violations of § 592 are listed below pursuant to § 592A. This list supersedes any previously published list. The names and addresses of the 16 foreign parties, and the month and year, in parentheses, in which the name of the company was first published in the **Federal Register**, are as follows:

Azmat Bangladesh, Plot Number 22–23, Sector 2 EPZ, Chittagong 4233, Bangladesh. (9/96)
Bestraight Limited, Room 5K, World Tech Centre, 95 How Ming Street, Kwun Tong, Kowloon, Hong Kong. (3/96)
Cotton Breeze International, 13/1578 Govindpuri, New Delhi, India. (9/95)
Cupid Fashion Manufacturing Ltd., 17/F Block B, Wongs Factory Building, 368–370 Sha Tsui Road, Tsuen Wan, Hong Kong. (9/97)
Hanin Garment Factory, 31 Tai Yau Street, Kowloon, Hong Kong. (3/96)
Hip Hing Thread Company, No. 10, 6/F Building A, 221 Texaco Road, Waikai Industrial Centre, Tsuen Wan, N.T. Hong Kong. (3/96)
Hyattex Industrial Company, 3F, No. 207–4 Hsin Shu road, Hsin Chuang City, Taipei Hsien, Taiwan. (9/96)
Jentex Industrial, 7–1 Fl., No. 246, Chang An E. Rd.,Sec. 2, Taipei, Taiwan. (3/97)
Li Xing Garment Company Limited, 2/F Long Guang Building, Number 2 Manufacturing District, Sanxiang Town, Zhongshan, Guandgong, China. (9/96)
Meigao Jamaica Company Limited, 134 Pineapple Ave., Kingston, Jamaica. (9/96)
Meiya Garment Manufacturers Limited, No. 2 Building, 3/F, Shantou Special Economic Zone, Shantou, China. (9/96)
Poshak International, H–83 South Extension, Part-I (Back Side), New Delhi, India. (3/96)
Sun Weaving Mill Ltd., Lee Sum Factory Building, Block 1 & 2, 23 Sze Mei Street, Sanpokong, Bk ½, Kowloon, Hong Kong. (9/97)
Topstyle Limited, 6/F, South Block, Kwai Shun Industrial Center, 51–63 Container Port Road, Kwai Chung, New Territories, Hong Kong. (9/96)
United Fashions, C–7 Rajouri Garden, New Delhi, India. (9/95)
Yunnan Provincial Textiles Import & Export, 576 Beijing Road Kunming, Yun Nan, China. (3/96)

Any of the above parties may petition to have its name removed from the list. Such petitions, to include any documentation that the petitioner deems pertinent to the petition, should be forwarded to the Assistant Commissioner, Office of Field Operations, United States Customs Service, 1301 Constitution Avenue, Washington, D.C. 20229.

Additional Foreign Entities

In the April 1, 1997 **Federal Register** notice, Customs also solicited information regarding the whereabouts of 40 foreign entities, which were identified by name and known address, concerning alleged violations of § 592. Persons with knowledge of the whereabouts of those 40 entities were requested to contact the Assistant Commissioner, Office of Field Operations, United States Customs Service, 1301 Constitution Avenue, Washington, D.C. 20229.

In this document, a new list is being published which contains the names and last known addresses of 39 entities. This reflects the addition of six new entities to the list and the removal of seven entities from the list. The seven entities removed from the list are China Artex Corp. Beijing Arts, Glee Dragon Garment Mfg. Ltd., Gold Tube Ltd., Hambridge Ltd., Kin Fung Knitting Factory, Moderntex International and Samsung Corporation.

Customs is soliciting information regarding the whereabouts of the following 39 foreign entities concerning alleged violations of § 592. Their names and last known addresses, and the month and year, in parentheses, in which the name of the company was first published in the **Federal Register**, are listed below:

Bahadur International, 250 Naraw Industrial Area, New Delhi, India. (9/95)
Madan Exports, E–106 Krishna Nagar, New Delhi, India. (9/95)
Gulnar Fashion Export, 14 Hari Nagar, Ashram, New Delhi, India. (9/95)
Janardhan Exports, E–106 Krishna Nagar, New Delhi, India. (9/95)
Morrin International, E–106 Krishna Nagar, New Delhi, India. (9/95)
Jai Arjun Mfg., Co., B 4/40 Paschim Vihar, New Delhi, India. (9/95)
Eroz Fashions, 535 Tuglakabad Extension, New Delhi, India. (9/95)
Shenzhen Long Gang Ji Chuen, Shenzhen, Long Gang Zhen, China. (9/95)
Traffic, D1/180 Lajpat Nagar, New Delhi, India. (9/95)
Raj Connections, E–106 Krishna Nagar, Delhi, India. (9/95)
Bao An Wing Shing Garment Factory, Ado Shi Qu, Bao An Shen Zhen, China. (9/95)
Guidetex Garment Factory, 12 Qian Jin Dong Jie, Yao Tai Xian Yuan Li, Canton, China. (9/95)
Dechang Garment Factory, Shantou S.E.Z., Cheng Hai, Cheng Shing, China. (9/95)
Guangdong Provincial Improved, 60 Ren Min Road, Guangdong, China. (9/95)
Kin Cheong Garment Factory, No. 13 Shantan Street, Sikou Country, Taishan, Kwangtong, China. (9/95)
Sam Hings Bags Factory, Ltd., #35 Tai Ping West Road, Jiu Jaing, Ghangdong, China. (9/95)
Luen Kong Handbag Factory, 33 Nanyuan Road, Shenzhen, Guangdong, China. (9/95)

Changping High Stage Knitting, Yuan Jing Yuan, Chau Li Qu Chang, Guangdong, China. (9/95)
Arsian Company Ltd, XII Khorcolo, Waanbaatar, Mongolia. (9/95)
Cahaya Suria Sdn Bhd, Lot 5, Jalan 3, Kedah, Malaysia. (9/95)
Crown Garments Factory Sdn Bhd, Lot 112, Jalan Kencana, Bagan Ajam, Malaysia. (9/95)
Richman Garment Manufacturing Co., Ltd., 7th Fl, Singapore Industrial Bldg., 338 Kwun Tong Road, Kowloon, Hong Kong. (9/95)
Herrel Company, 64 Rowell Road, Suva, Fiji. (9/95)
Belwear Co., Ltd., Flat C, 3rd Floor, Yuk Yat Street, Kowloon, Hong Kong. (9/95)
Kingston Garment Ltd., Lot 42–44 Caracas Dr., Kingston, Jamaica. (9/95)
Poltex Sdn, 8 Jalan Serdang, Kedah, Malaysia. (9/95)
Sam Hing International Enterprise, 5 Guernsey St., Guilford NSW, Australia. (9/95)
Societe Prospere De Vetements S.A., Lome, Togo. (9/95)
Confecciones Kalinda S.A., Zona Franca, Los Alcarrizos, Santo Domingo, Dominican Republic. (9/95)
Royal Mandarin Knitworks Co., Flat C 21/F, So Tau Centre, 11–15 Sau Road, Kwai Chung, N.T., Hong Kong. (9/95)
Wong's International, Nairamdliyn 26, Ulaanbaatar 11, Naaun, Mongolia. (9/95)
Lin Fashions S.A., Lot 111, San Pedro de Macoris, Dominican Republic. (9/96)
United Textile and Weaving, P.O. Box 40355, Sharjah, United Arab Emirates. (3/97)
Envestisman Sanayi A.S., Buyukdere Cad 47, Tek Is Merkezi, Istanbul, Turkey. (9/97)
Land Global Ltd., Block c, 14/F, Y.P. Fat Building, Phase 1, 77 Hoi Yuen Road, Kowloon Road, Hong Kong. (9/97)
Patenter Trading Company, Block C. 14/F, Yip Fat Industrial Building, Phase 1, 77 Hoi Yuen Road, Kowloon, Hong Kong. (9/97)
Zuun Mod Garment Factory Ltd., Tuv Aimag, Mongolia. (9/97)
Round Ford Investments, 37–39 Ma Tau Wai Road, 13/f Tower B, Kowloon, Hong Kong. (9/97)
Shanghai Yang Yuan Garment Factory, 2 Zhaogao Road, Chuanshin, Shanghai, China. (9/97)

If you have any information as to a correct mailing address for any of the above 39 firms, please send that information to the Assistant Commissioner, Office of Field Operations, U.S. Customs Service, 1301 Constitution Avenue, N.W., Washington, D.C. 20229.

Dated: September 5, 1997.

Robert S. Trotter,

Assistant Commissioner, Office of Field Operations.

[FR Doc. 97–24345 Filed 9–12–97; 8:45 am]

BILLING CODE 4820–02–P

DEPARTMENT OF VETERANS AFFAIRS

[OMB Control No. 2900–0465]

Proposed Information Collection Activity: Proposed Collection; Comment Request; Extension

AGENCY: Veterans Benefits Administration, Department of Veterans Affairs.

ACTION: Notice.

SUMMARY: The Veterans Benefits Administration (VBA) is announcing an opportunity for public comment on the proposed collection of certain information by the agency. Under the Paperwork Reduction Act (PRA) of 1995, Federal agencies are required to publish notice in the **Federal Register** concerning each proposed collection of information, including each proposed extension of a currently approved collection, and allow 60 days for public comment in response to the notice. This notice solicits comments on requirements to determine the individual's continued entitlement to VA benefits.

DATES: Written comments and recommendations on the proposed collection of information should be received on or before November 14, 1997.

ADDRESSES: Submit written comments on the collection of information to Nancy J. Kessinger, Veterans Benefits Administration (20S52), Department of Veterans Affairs, 810 Vermont Avenue, NW, Washington, DC 20420. Please refer to ''OMB Control No. 2900–0465'' in any correspondence.

FOR FURTHER INFORMATION CONTACT: Nancy J. Kessinger at (202) 273–8310 or FAX (202) 275–4884.

SUPPLEMENTARY INFORMATION: Under the PRA of 1995 (Pub. L. 104–13; 44 U.S.C., 3501–3520), Federal agencies must obtain approval from the Office of Management and Budget (OMB) for each collection of information they conduct or sponsor. This request for comment is being made pursuant to Section 3506(c)(2)(A) of the PRA.

With respect to the following collection of information, VBA invites comments on: (1) Whether the proposed collection of information is necessary for the proper performance of VBA's functions, including whether the information will have practical utility; (2) the accuracy of VBA's estimate of the burden of the proposed collection of information; (3) ways to enhance the quality, utility, and clarity of the information to be collected; and (4) ways to minimize the burden of the collection of information on respondents, including through the use of automated collection techniques or the use of other forms of information technology.

Title and Form Numbers: Student Verification of Enrollment, VA Forms 22–8979 and 22–8979–1.

(**Note:** VA Forms 22–8979 and 22–8979–1 collect the same information. VA Form 22–8979 is electronically generated for monthly mailings while VA Form 22–8979–1 is printed and distributed to VA regional offices for individual use.)

OMB Control Number: 2900–0465.

Type of Review: Extension of a currently approved collection.

Abstract: The form is used by students in certifying attendance and continued enrollment in courses leading to a standard college degree or in non-college degree programs. The information is used to determine the individual's continued entitlement to VA benefits.

VA is authorized to pay educational benefits to veterans and other eligible persons pursuing approved programs not leading to a standard college degree under Chapters 30, 32, and 35, Title 38, U.S.C.; Chapter 1606, Title 10, U.S.C.; and Section 903 of Public Law 96–342. VA Form 22–8979 serves as the form for reporting necessary certification of actual attendance and verification of the student's continued enrollment for claimant's pursuing non-college degree programs.

Affected Public: Individuals or households.

Estimated Annual Burden: 189,000 hours.

Estimated Average Burden Per Respondent: 5 minutes.

Frequency of Response: On occasion.

Estimated Number of Respondents: 324,000.

Dated: September 2, 1997.

William T. Morgan,

Management Analyst.

[FR Doc. 97–24311 Filed 9–12–97; 8:45 am]

BILLING CODE 8320–01–U

DEPARTMENT OF VETERANS AFFAIRS

Advisory Committee on Prosthetics and Special-Disabilities Programs, Notice of Meeting

The Department of Veterans Affairs (VA) gives notice under Public Law 92–463 that a meeting of the Advisory Committee on Prosthetics and Special-Disabilities Programs will be held Monday and Tuesday, September 22–23, 1997, at VA Headquarters, 810 Vermont Avenue, N.W., Washington,

D.C. The meeting on September 22 will be held in Room 530 and the meeting on September 23 will be held in Room 730. The September 22 session will convene at 8:00 a.m. and adjourn at 4 p.m. and the September 23 session will convene at 8:00 a.m. and adjourn at 12:00 noon. The meeting's agenda will include: officially welcoming three new members to the Advisory Committee, briefings by the National Program Directors of the Special-Disabilities Programs regarding the status of their activities over the last six months and a status report on implementation of the Veterans' Health Care Eligibility Reform Act of 1996 as it pertains to the legislative requirement to maintain capacity to meet specialized needs of disabled veterans. The Advisory Committee will also receive the opportunity to meet the new VA Chief Research and Development Officer. The meeting on September 23 will consist of a continuation of briefings by the National Program Directors of the Special-Disabilities Programs.

The purpose of the Advisory Committee on Prosthetics and Special-Disabilities Programs is to advise the Department on its prosthetic programs designed to provide state-of-the-art prosthetics and the associated rehabilitation research, development, and evaluation of such technology. The Advisory Committee also advises the Department on special disability programs which are defined as any program administered by the Secretary to serve veterans with spinal cord injury, blindness or vision impairment, loss of or loss of use of extremities, deafness or hearing impairment, or other serious incapacities in terms of daily life functions.

The meeting is open to the public to the capacity of the room. For those wishing to attend, contact Kathy Pessagno, Veterans Health Administration (113), phone (202) 273–8512, Department of Veterans Affairs, 810 Vermont Avenue, N.W., Washington, D.C. 20420, prior to September 18, 1997.

Dated: September 8, 1997.

Heyward Bannister,

Committee Management Officer.

[FR Doc. 97–24308 Filed 9–12–97; 8:45 am]

BILLING CODE 8320–01–M

DEPARTMENT OF VETERANS AFFAIRS

Voluntary Service National Advisory Committee, Notice of Meeting

The Department of Veterans Affairs gives notice under Pub. L. 92–463 that the annual meeting of the Department of Veterans Affairs Voluntary Service National Advisory Committee will be held at the Albuquerque Hilton, 1901 University Blvd., NE, Albuquerque, New Mexico. October 22 through 25, 1997. The meeting begins with participant registration from 8:00 a.m. to 5:00 p.m., Tuesday, October 21 through Thursday, October 23, in the Garden Room of the Albuquerque Hilton. The meeting is open to the public.

The committee, comprised of sixty one national voluntary organizations, advises the Under Secretary for Health and other members of the Department of Veterans Affairs Central Office staff on how to coordinate and promote volunteer activities within VA facilities. The primary purposes of this meeting are: to provide for committee review of volunteer policies and procedures; to accommodate full and open communications between the organizations, representatives and the Voluntary Service Office and field staff; to provide educational opportunities geared towards improving volunteer programs with special emphasis on methods to recruit, retain, motivate and recognize volunteers; and to approve committee recommendations.

On Tuesday, October 21, 1997, VAVS Field Staff will meet from 3:00 p.m. until 5:00 p.m. On Wednesday, October 22, from 10:00 a.m. until 2:00 p.m. a free health screening is provided for all participants. At 8:00 a.m. until 11:30 a.m. there will be a meeting of the National Executive Committee. At 9:00 a.m. until 10:00 a.m. there will be a non-participant orientation and from 1:30 p.m until 2:30 p.m., a new member orientation will be provided. In the afternoon from 3:00 p.m. until 4:30 p.m. there will be an open forum for all participants. Opening ceremonies begin at 7:00 p.m. until 8:30 p.m. On Thursday, October 23, 1997, there will be a Business Session from 8:00 a.m. until 11:00 a.m. In the afternoon from 1:30 p.m. until 2:45 p.m. participants will choose from four educational workshops. These workshops will be repeated from 3:30 p.m. until 4:45 p.m. On Friday, October 24, the four workshops will be repeated from 10:00 a.m. until 11:15 a.m. and again from 2:30 p.m. until 3:45 p.m. At 12:00 p.m. until 2:00 p.m. participants will attend the James H. Parke luncheon.

On the morning of Saturday, October 25, there will be a Plenary Session from 8:00 a.m. until 10:00 a.m. followed by a Business Session from 10:15 a.m. until 12:15 p.m. The closing business session will be held from 1:00 p.m. until 2:00 p.m.

For further information, contact the Director, Voluntary Service Office (162), Department of Veterans Affairs, 810 Vermont Avenue, NW, Washington, DC, 20420, (202) 273–8952.

Dated: September 8, 1997.

By Direction of the Secretary-Designate.

Heyward Bannister,

Committee Management Officer.

[FR Doc. 97–24312 Filed 9–12–97; 8:45 am]

BILLING CODE 8320–01–M

DEPARTMENT OF VETERANS AFFAIRS

Advisory Committee on Women Veterans, Notice of Meeting

The Department of Veterans Affairs gives notice under Pub. L. 92–463 that a meeting of the Advisory Committee on Women Veterans will be held on September 30–October 2, 1997, at the Department of Veterans Affairs; Washington, DC. The purpose of the Committee is to advise the Secretary of Veterans Affairs regarding the needs of women veterans with respect to health care, rehabilitation, compensation, outreach and other programs, and activities administered by the Department of Veterans Affairs designed to meet such needs. The Committee will make recommendations to the Secretary regarding such activities.

The sessions will convene on September 30, 9:00 a.m. to 5:00 p.m.; October 1, 9:00 a.m. to 5:00 p.m.; and conclude October 2, 9:00 a.m. to 2:00 p.m. The Committee will meet in conference room 630, VA Central Office Building, 810 Vermont Avenue, NW, Washington, DC. All sessions will be open to the public. It will be necessary for those wishing to attend to contact Ms. Maryanne Carson, Department of Veterans Affairs, Washington, DC (phone 202–273–6193) prior to September 20, 1997. A tentative agenda follows:

Tuesday, September 30, 1997

9:00 am—Review of Minutes, May meeting—Chair
9:30 am—Old Business: Chair
10:00 am—Briefing: Proceedings Summit on Women Veterans—Furey
10:30 am—Break
11:00 am—Briefing: Center for Women Veterans—Furey
12:15 pm—Lunch
1:30 pm—Briefing: Veterans Health Administration Initiatives—Zeiler
2:30 pm—Break
3:00 pm—Briefing: Veterans Benefits Administration Initiatives—Petty
4:00 pm—Executive Session—Chair

Wednesday, October 1, 1997

9:00 am–5:00 pm
Subcommittee Meetings: Summary of Year Activities
Development of Plan for '98 report

Thursday, October 2, 1997

9:00 am—Subcommittee Reports: Subcommittee Chairs
11:00 am
Presentation of Certificates: Rotating members
Introduction of Chairperson 1998–2000

Dated: September 8, 1997.

By Direction of the Secretary-Designate.

Heyward Bannister,

Committee Management Officer.

[FR Doc. 97–24309 Filed 9–12–97; 8:45 am]

BILLING CODE 8320–01–M

Corrections

Federal Register

Vol. 62, No. 178

Monday, September 15, 1997

This section of the FEDERAL REGISTER contains editorial corrections of previously published Presidential, Rule, Proposed Rule, and Notice documents. These corrections are prepared by the Office of the Federal Register. Agency prepared corrections are issued as signed documents and appear in the appropriate document categories elsewhere in the issue.

DEPARTMENT OF THE INTERIOR

Fish and Wildlife Service

Availability of Draft Recovery Plan for the Western Lily for Review and Comment

Correction

In notice document 97–23585, beginning on page 47041, in the issue of Friday, September 5, 1997, make the following correction:

On page 47041, in the third column, in the **DATES** entry, ''October 6, 1997'' should read ''November 4, 1997''.

BILLING CODE 1505-01-D

DEPARTMENT OF THE INTERIOR

National Park Service

Notice of Inventory Completion for Native American Human Remains from Fort Stevenson, Dakota Territory in the Possession of the Peabody Museum of Archaeology and Ethnology, Harvard University, Cambridge, MA

Correction

In notice document 97–23367, beginning on page 46510, in the issue of Wednesday, September 3, 1997, make the following correction:

On page 46511, in the first column, in the last paragraph, in the second from the last line, ''[*thirty days following publication in the* **Federal Register**]'' should read ''October 3, 1997.''.

BILLING CODE 1505-01-D

DEPARTMENT OF THE INTERIOR

National Park Service

Notice of Intent to Repatriate Cultural Items from New York in the Possession of the Springfield Science Museum, Springfield, MA

Correction

In notice document 97–23366, appearing on page 46511, in the issue of Wednesday, September 3, 1997, make the following correction:

On page 46511, in the third column, in the second full paragraph, in the 13th line, ''[*thirty days following publication in the* **Federal Register**]'' should read ''October 3, 1997.''.

BILLING CODE 1505-01-D

federal register

Monday
September 15, 1997

Part II

Environmental Protection Agency

40 CFR Part 60

Standards of Performance for New Stationary Sources and Emission Guidelines for Existing Sources: Hospital/Medical/Infectious Waste Incinerators; Final Rule

ENVIRONMENTAL PROTECTION AGENCY

40 CFR Part 60

[AD–FRL–5878–8]

RIN 2060–AC62

Standards of Performance for New Stationary Sources and Emission Guidelines for Existing Sources: Hospital/Medical/Infectious Waste Incinerators

AGENCY: Environmental Protection Agency (EPA).

ACTION: Final rule.

SUMMARY: This action promulgates new source performance standards (NSPS or standards) and emission guidelines (EG or guidelines) to reduce air emissions from hospital/medical/infectious waste incinerator(s) (HMIWI) by adding subpart Ec, standards of performance for new HMIWI, and subpart Ce, emission guidelines for existing HMIWI, to 40 CFR part 60. The standards and guidelines implement sections 111 and 129 of the Clean Air Act (CAA) as amended in 1990. The standards and guidelines apply to units whose primary purpose is the combustion of hospital waste and/or medical/infectious waste. Sources are required to achieve emission levels reflecting the maximum degree of reduction in emissions of air pollutants that the Administrator has determined is achievable, taking into consideration the cost of achieving such emission reduction, any nonair-quality health and environmental impacts, and energy requirements. The promulgated standards and guidelines establish emission limits for particulate matter (PM), opacity, sulfur dioxide (SO_2), hydrogen chloride (HCl), oxides of nitrogen (NO_X), carbon monoxide (CO), lead (Pb), cadmium (Cd), mercury (Hg), dioxins and dibenzofurans (dioxins/furans), and fugitive ash emissions. Some of the pollutants being regulated are considered to be carcinogens and at sufficient concentrations can cause toxic effects following exposure. The standards and guidelines also establish requirements for HMIWI operator training/qualification, waste management plans, and testing/monitoring of pollutants and operating parameters. Additionally, the guidelines for existing HMIWI contain equipment inspection requirements and the standards for new HMIWI include siting requirements.

DATES: *Effective Dates.* The standards for new sources (§ 60.17 and §§ 60.50c through 60.58c) are effective as of March 16, 1998 and the emission guidelines for existing sources (§ 60.30 and §§ 60.30e through 60.39e) are effective as of November 14, 1997. The incorporation by reference of certain publications listed in the regulations is approved by the Director of the Federal Register as of March 16, 1998. See **SUPPLEMENTARY INFORMATION** for a discussion of the schedule for judicial review.

Comments. Comments on the Information Collection Request (ICR) document associated with the final standards for new sources are requested, as discussed in section VI.B of this preamble. Comments on the ICR document must be received on or before November 14, 1997. Refer to Section VI.B for further information on this request for comment.

ADDRESSES: *Comments.* As noted above, comments on the ICR document associated with the final standards for new sources are requested. See section VI.B and the **SUPPLEMENTARY INFORMATION** section of this preamble for further information on obtaining a copy of the ICR document and addresses for submitting comments on the ICR document.

Background Information. The principal background information for the final standards and guidelines includes a background information document entitled ''Hospital/Medical/Infectious Waste Incinerators: Background Information for Promulgated Standards and Guidelines—Summary of Public Comments and Responses'' (EPA–453/R–97–006b), which contains a summary of all the public comments submitted regarding the changes to the standards and guidelines that were discussed in the June 20, 1996 **Federal Register** document (61 FR 31736) and the EPA's response to these comments. Background information documents which present the economic and regulatory impacts of the standards and guidelines entitled: (1) ''Hospital/Medical/Infectious Waste Incinerators: Background Information for Promulgated Standards and Guidelines—Analysis of Economic Impacts for Existing Sources'' (EPA–453/R–97–007b); (2) ''Hospital/Medical/Infectious Waste Incinerators: Background Information for Promulgated Standards and Guidelines—Analysis of Economic Impacts for New Sources'' (EPA–453/R–97–008b); and (3) ''Hospital/Medical/Infectious Waste Incinerators: Background Information for Promulgated Standards and Guidelines—Regulatory Impact Analysis for New and Existing Facilities'' (EPA–453/R–97–009b) are available. Also a document entitled ''Fact Sheet: New Hospital/Medical/Infectious Waste Incinerators—Promulgated Subpart Ec Standards,'' which succinctly summarizes the final standards, and a document entitled ''Fact Sheet: Existing Hospital/Medical/Infectious Waste Incinerators—Promulgated Subpart Ce Emission Guidelines,'' which succinctly summarizes the guidelines, are available. See **SUPPLEMENTARY INFORMATION** for instructions and addresses for obtaining these documents.

Docket. Docket No. A–91–61, which contains supporting information used in developing the standards and guidelines, is available for public inspection and copying between 8:00 a.m. and 4:00 p.m., Monday through Friday except for Federal holidays at the following address: U.S. Environmental Protection Agency, Air and Radiation Docket and Information Center (Mail Code 6102), 401 M Street SW, Washington DC 20460 (phone: (202) 260–7548). The docket is located at the above address in room M–1500, Waterside Mall (ground floor, central mall). A reasonable fee may be charged for copying.

FOR FURTHER INFORMATION CONTACT: Mr. Rick Copland at (919) 541–5265, Combustion Group, Emission Standards Division (MD–13), U. S. Environmental Protection Agency, Research Triangle Park, North Carolina 27711 (copland.rick@epamail.epa.gov) or any of the EPA Regional Office contacts listed in Table 1 below.

TABLE 1.—CONTACTS IN EPA REGIONAL OFFICES

Region	Contact	Phone No.
I (Boston)	Susan Lancey	(617) 565–3587
II (New York)	Christine DeRosa	(212) 637–4022
III (Philadelphia)	James Topsale	(215) 566–2190
IV (Atlanta)	Scott Davis	(404) 562–9127
V (Chicago)	Douglas Aburano (MI)	(312) 353–6960

TABLE 1.—CONTACTS IN EPA REGIONAL OFFICES—Continued

Region	Contact	Phone No.
	Ryan Bahr (IN)	(312) 353–4366
	Scott Hamilton (OH)	(312) 353–4775
	Charles Hatten (WI)	(312) 886–6031
	Mark Palermo (IL)	(312) 886–6082
	Rick Tonielli (MN)	(312) 886–6068
VI (Dallas)	Mick Cote	(214) 665–7219
VII (Kansas City)	Wayne Kaiser	(913) 551–7603
VIII (Denver)	Meredith Bond	(303) 312–6438
IX (San Francisco)	Patricia Bowlin	(415) 744–1188
X (Seattle)	Catherine Woo	(206) 553–1814

SUPPLEMENTARY INFORMATION:

Regulated Entities

Entities potentially regulated by the standards and guidelines are those which operate hospital/medical/infectious waste incinerators. Regulated categories and entities include those listed in Table 2.

TABLE 2.—REGULATED ENTITIES[a]

Category	Examples of regulated entities
Industry	Hospitals, nursing homes, research laboratories, other health care facilities, commercial waste disposal companies.
Federal Government	Armed services, public health service, Federal hospitals, other Federal health care facilities.
State/local/Tribal Government	State/county/city hospitals and other health care facilities.

[a] This table is not intended to be exhaustive, but rather provides a guide for readers regarding entities likely to be regulated by the standards or guidelines for HMIWI. This table lists the types of entities that EPA is now aware could potentially be regulated. Other types of entities not listed in the table could also be regulated. To determine whether your facility is regulated by the standards or guidelines for hospital/medical/ infectious waste incinerators, you should carefully examine the applicability criteria in sections 60.50c and 60.51c of the promulgated standards, section 60.32e of the promulgated guidelines, and in section III.A of today's notice. If you have questions regarding the applicability of the HMIWI standards and guidelines to a particular entity, consult a person listed in the preceding **FOR FURTHER INFORMATION CONTACT** section.

Documents Available Electronically

This **Federal Register** document discusses: (1) The standards for new HMIWI, (2) the guidelines for existing HMIWI, and (3) a request for public comment on the ICR document. This preamble and regulatory text are available electronically via the Internet. Also available electronically are FACT SHEETS, which summarize the final standards and guidelines. They are suggested reading for persons requiring an overview of the standards and guidelines. Hard copies of the FACT SHEETS can also be obtained by calling Donna Collins at (919) 541–5578. The following five items are available electronically in file ''MWIFINAL.ZIP'':

1. ''Fact Sheet: New Hospital/ Medical/Infectious Waste Incinerators—Promulgated Subpart Ec Standards.''
2. ''Fact Sheet: Existing Hospital/ Medical/Infectious Waste Incinerators—Promulgated Subpart Ce Emission Guidelines.''
3. **Federal Register** document for this promulgation: ''Standards of Performance for New Stationary Sources and Emission Guidelines for Existing Sources: Hospital/Medical/Infectious Waste Incinerators'' (this document).
4. ''Hospital/Medical/Infectious Waste Incinerators: Background Information for Promulgated Standards and Guidelines—Summary of Public Comments and Responses'' (EPA–453/ R–97–006b).
5. Information Collection Request document for these standards for new sources: ''Supporting Statement for ICR No. 1730.02—1997 Standards for New Hospital/Medical/Infectious Waste Incinerators (Subpart Ec).''

The documents are available via the Internet at ''http://www.epa.gov/ttn/ oarpg/rules.html''. The documents are also available via the Internet through the Unified Air Toxics Website at ''http://www.epa.gov/oar/oaqps/airtox/ ''.

Judicial Review

Under section 307(b)(1) of the Clean Air Act, judicial review of the actions taken by this notice is available by filing a petition for review in the U.S. Court of Appeals for the District of Columbia Circuit within 60 days of today's publication of this rule. Under section 307(b)(2) of the Clean Air Act, the requirements that are in today's notice may not be challenged later in the civil or criminal proceedings brought by the EPA to enforce these requirements.

Preamble Outline

The following outline is provided to aid in locating information in the introductory text (preamble) to the final standards and guidelines.

I. Acronyms, Abbreviations, and Measurement Units
A. Acronyms
B. Abbreviations and Measurement Units
II. Introduction
A. Purpose of the Standards and Guidelines
B. Implementation of the Emission Guidelines
1. Implementation Activities
2. Public Involvement
C. Technical Basis of the Standards and Guidelines
D. February 1995 Proposal
E. June 1996 Re-proposal
F. Stakeholders and Public Involvement
III. Considerations in Developing the Final Standards and Guidelines
A. Applicability
1. Definition of Medical Waste
2. Co-fired Combustors
3. Waste Types
4. Cement Kilns
B. Pyrolysis Units
C. Waste Management Plans
D. Testing, Monitoring, and Inspection
E. Operator Training and Qualification
IV. Standards of Performance for New Sources
A. Summary of the Standards
B. Significant Issues and Changes

1. Combined Dry/Wet Scrubbers
2. Siting Analysis
C. Selection of MACT
D. Impacts of the Standards
V. Emission Guidelines for Existing Sources
A. Summary of the Guidelines
B. Significant Issues and Changes
C. Selection of MACT
D. Impacts of the Guidelines
VI. Administrative Requirements
A. Docket
B. Paperwork Reduction Act
C. Executive Order 12866
D. Unfunded Mandates Reform Act
E. Executive Order 12875
F. Regulatory Flexibility Act (RFA) and Small Business Regulatory Enforcement Fairness Act of 1996 (SBREFA)
G. Submission to Congress and the General Accounting Office
H. Clean Air Act Procedural Requirements

I. Acronyms, Abbreviations, and Measurement Units

The following acronyms, abbreviations, and measurement units are provided to clarify the preamble to the final standards and guidelines.

A. Acronyms

APCD air pollution control device
APTI Air Pollution Training Institute
CAA Clean Air Act
CAAA Clean Air Act Amendments of 1990
CEMS continuous emissions monitoring system(s)
CFBC circulating fluidized bed combustor
CFR Code of Federal Regulations
DI dry injection
EPA U.S. Environmental Protection Agency
EG emission guidelines
FF fabric filter
FR Federal Register
HAP hazardous air pollutant(s)
HMIWI hospital/medical/infectious waste incinerator(s)
ICCR Industrial Combustion Coordinated Rulemaking
ICR information collection request
MACT maximum achievable control technology
MSW municipal solid waste
MWC municipal waste combustor(s)
MWI medical waste incinerator(s)
MWP medical waste pyrolysis
MWTA Medical Waste Tracking Act
NAPH National Association of Public Hospitals
NSPS new source performance standards
NSR new source review
NYSDOH New York State Department of Health
OAQPS Office of Air Quality Planning and Standards
OMB Office of Management and Budget
ORD Office of Research and Development
PSD prevention of significant deterioration
RCRA Resource Conservation and Recovery Act
RFA Regulatory Flexibility Act
RMW regulated medical waste
SBA Small Business Administration
SBREFA Small Business Regulatory Enforcement Fairness Act
SMSA standard metropolitan statistical area
SWDA Solid Waste Disposal Act

B. Abbreviations and Measurement Units

bps=bits per second
Btu=British thermal units
Btu/yr=British thermal units per year
Cd=cadmium
CDD/CDF=dioxins/furans
CO=carbon monoxide
dioxins=polychlorinated dibenzo-p-dioxins
dscf=dry standard cubic feet (at 14.7 pounds per square inch, 68°F)
dscm=dry standard cubic meters (at 14.7 pounds per square inch, 68°F)
°F=degrees Fahrenheit
ft^3=cubic feet
furans=polychlorinated dibenzofurans
g=gram (454 grams per pound)
g/yr=grams per year
gr=grains (7,000 grains per pound)
HCl=hydrogen chloride
Hg=mercury
m^3=cubic meter (35.3 cubic feet per cubic meter)
mg=milligrams (10^{-3} grams)
Mg=megagram (1.1 tons per megagram)
Mg/yr=megagrams per year
MMm^3=million cubic meters
MW=megawatt
MW-hr/yr=megawatt-hours per year
ng=nanogram (10^{-9} grams)
NO_X=nitrogen oxides
Pb=lead
PM=particulate matter
ppmv=parts per million by volume
SO_2=sulfur dioxide
TEQ basis=2,3,7,8-tetrachlorinated dibenzo-p-dioxin toxic equivalent based on the 1989 international toxic equivalency factors
tons/d=tons per day
total mass basis=total mass of tetra- through octa-chlorinated dibenzo-p-dioxins and dibenzofurans

II. Introduction

A. Purpose of the Standards and Guidelines

The 1990 Clean Air Act Amendments (CAAA) reflect growing public concern about the large volume of toxic air pollutants released from numerous categories of emission sources. Title III of the CAAA specifically enumerated 189 hazardous air pollutants (HAP) and instructed EPA to protect public health by reducing emissions of these pollutants from the sources that release them. The EPA's standards are to be issued in two phases. The first phase standards are designed to bring all sources up to the level of emissions control achieved by those that are already well-controlled. The second phase standards, due a few years later, are to require further emission reductions in any case in which the first phase measures were not by themselves sufficient to fully protect the public health.

In this context, the CAAA singled out waste incineration for special attention. Congress recognized both a high level of public concern about the incineration of municipal, medical, and other solid wastes and a number of special management concerns for these types of sources. Consequently, section 129 of the CAA directs EPA to apply the two-phase control approach to various categories of solid waste incinerators, including hospital/ medical/infectious waste incinerator(s) (HMIWI). Today's action promulgates standards and guidelines for new and existing HMIWI under section 129. Current methods of medical waste incineration cause the release of a wide array of air pollutants, including several pollutants of particular public health concern.

The EPA estimates that there are approximately 2,400 HMIWI operating in the United States, which combust approximately 767 thousand Mg (846 thousand tons) of hospital waste and medical/infectious waste annually. Emissions from HMIWI contain organics (dioxins/furans), particulates (PM), metals (Cd, Pb, and Hg), acid gases (HCl and SO_2), and NO_X. These pollutants can have adverse effects on both public health and welfare. Pollutants of principal concern to public health include dioxins/furans, PM, Pb, Cd, and Hg. Today's standards and guidelines are set forth as emission limits and will significantly reduce HMIWI emissions.

Several States, including New York, California, and Texas, have adopted relatively stringent regulations in the past few years limiting emissions from HMIWI. The implementation of these regulations has brought about very large reductions in HMIWI emissions and the associated risk to public health in those States. Today EPA is promulgating nationally applicable emission standards and guidelines for HMIWI that build on the experience of these leading States. Like the State regulations, the standards and guidelines promulgated today are based on the use of add-on air pollution control systems. These standards and

guidelines implement the first phase requirements of section 129 described above. As described in detail below, section 129, like section 112, of the CAA instructs the Agency to set performance standards that challenge industry to meet or exceed the pollution control standards established by better controlled similar facilities. In this way, the overall state of environmental practice is raised for large segments of industry, a basic level of health protection is provided to all communities, situations in which uncertainty about total risk and hazard result in no protection for the exposed public are avoided, and yet the cost of pollution control to industry is constrained to levels already absorbed by similar operations. Eight years later, in a second phase, EPA will evaluate whether the residual public health risk warrants additional control.

The EPA's Office of Research and Development (ORD) is preparing a national inventory of dioxin emissions as part of its Dioxin Reassessment. This effort will include emission estimates for HMIWI. Since the effort is not yet complete, the results are not included in this package. The ORD is considering a very similar approach to that used in this rulemaking and anticipates generating similar emission estimates.

B. Implementation of the Emission Guidelines

The subpart Ce emission guidelines are unique in that, unlike the subpart Ec NSPS, the guidelines are not direct Federal requirements for HMIWI. The subpart Ec NSPS are Federal requirements that apply to all new HMIWI units that commence construction after June 20, 1996 or to existing HMIWI units that commence modification after March 16, 1998. The subpart Ce emission guidelines require States to develop section 111(d)/129 State plans to regulate existing HMIWI built on or before June 20, 1996. These State plans must be submitted to EPA for approval and must be at least as protective as the guidelines. Together, 40 CFR part 60, subpart B and subpart Ce specify the content and the general rules for adopting and submitting the section 111(d)/129 State plans.

The CAA requires that each State submit a State plan to EPA within 1 year of EPA's adoption of the guidelines. State plans must contain specific information and legal mechanisms necessary to implement the guidelines. The State must make available to the public the State plan and provide opportunity for discussion of the State plan in a public hearing prior to submittal to EPA. The State must submit the final plan to EPA by September 15, 1998. The EPA then has 6 months to approve or disapprove the State plan. Plan approval or disapproval will be published in the **Federal Register**. If a State plan is disapproved, EPA will state the reasons for disapproval in the **Federal Register**. The State can respond to EPA's concerns and submit a revised plan. If a State does not submit an approvable State plan by September 15, 1999, EPA will adopt and implement a Federal plan that applies to existing HMIWI in the State.

1. Implementation Activities

The EPA is preparing an Enabling Document to assist States with implementing the HMIWI guidelines. The EPA Regional Offices will mail hard copies of the Enabling Document to their State contacts. This document should be publicly available in the next few weeks. The public can access this document electronically via the Internet at ''http://www.epa.gov/ttn/oarpg/rules.html'' or ''http://www.epa.gov/oar/oaqps/airtox/'.

In September 1997, EPA plans to broadcast a telecourse to States, regions, and the public on the HMIWI rule and on implementation requirements. State field offices will be notified of the telecourse. The EPA's distance learning network telecourse schedule, as well as a list of telecourse sites, is available at http://134.67.104.12/html/apti/aptc.htm.

Finally, EPA will host its annual Air Toxics Workshop for EPA Regions and States in Research Triangle Park in late August 1997. A 1-hour session is scheduled to provide States an overview of the HMIWI rule and to discuss implementation issues. The Air Toxics Workshop provided for EPA Regions and States is not open to the public. Opportunities for public participation in the implementation process are discussed below.

2. Public Involvement

Public participation, under the provision of the CAA, is an important right and responsibility of citizens in the State process of developing, adopting, and implementing section 111(d)/ 129 State plans. As with State Implementation Plans (SIP) for criteria pollutants, EPA regulations in 40 CFR part 60, subpart B, make it clear that citizen input on section 111(d)/129 State plans is encouraged in order to help define appropriate emission standards and retrofit schedules. Under Subpart B, some minimum public participation requirements are as follows:

a. Reasonable notice of one or more public hearing(s) at least 30 days before the hearing;

b. One or more public hearing(s) on the section 111(d)/129 State plan (or revision) conducted at location(s) within the State, if requested;

c. Date, time, and place of hearing(s) prominently advertised in each region affected;

d. Availability of draft section 111(d)/129 State plan for public inspection in at least one location in each region to which it will apply;

e. Notice of hearing provided to EPA Regional Administrator, local affected agencies, and to other States affected;

f. Certification that the public hearing, if held, was conducted in accordance with Subpart B State procedures; and

g. Hearing records must be retained for a minimum of 2 years; these records must include the list of commenters, their affiliation, summary of each presentation and/or comments submitted, and the State's responses to those comments.

C. Technical Basis of the Standards and Guidelines

Section 129 requires the EPA to develop numerical emission limitations in the standards for new HMIWI and guidelines for existing HMIWI for the following: Particulate matter (PM), opacity, sulfur dioxide (CO_2), hydrogen chloride (HCl), oxides of nitrogen (NO_X), carbon monoxide (CO), lead (Pb), cadmium (Cd), mercury (Hg), and dioxins and dibenzofurans (dioxin/furan). Section 129 requires that the standards and guidelines reflect the maximum degree of reduction in emissions of air pollutants, taking into consideration the cost of achieving such emission reduction, any nonair-quality health and environmental impacts, and energy requirements that the Administrator determines are achievable for a particular category of sources. This control level is commonly referred to as the ''maximum achievable control technology'' or ''MACT.'' Section 129 also provides that standards for new sources may not be less stringent than the emissions control achieved in practice by the best controlled similar unit. This is commonly referred to as the ''MACT floor'' for new HMIWI. Additionally, section 129 provides that the emission limitations in the guidelines for existing HMIWI may not be less stringent than the average emission limitation achieved by the best performing 12 percent of units in the category. This is commonly referred to as the ''MACT floor'' for existing HMIWI.

The CAA requires EPA to evaluate standards and guidelines more stringent than the MACT floor, considering costs and other impacts described above. If EPA concludes that more stringent standards and/or guidelines are achievable considering costs and other impacts, then the standards and/or guidelines would be established at these more stringent levels (i.e., MACT would be more stringent than the MACT floor). The EPA may establish NSPS or EG at the MACT floor only if EPA concludes that the costs and/or other impacts associated with the more stringent requirements are unreasonable. In no case may EPA establish emission limitations less stringent than the MACT floor.

Technical data on the number and size of HMIWI, control technologies in use, permit emission limits, and emission test data were used to determine the MACT floors for new and existing HMIWI and to define regulatory options more stringent than the MACT floors. The types of data EPA considered in selecting final standards and guidelines included emissions information from literature and State and local agencies; and emissions test data provided by industry or gathered during EPA's HMIWI emissions test program. Overall, the EPA used performance test data from over 30 HMIWI to develop the standards and guidelines.

In keeping with the Administrator's ''reinventing government'' initiative, several of the changes to the guidelines and standards were made to streamline the regulations and provide increased flexibility while optimizing environmental control by using common sense initiatives. Examples of these changes include the following: (1) Reduced testing for HMIWI demonstrating compliance with the required emission levels; (2) narrowing the definition of medical waste; (3) clarification of siting requirements for new HMIWI; (4) allowing HMIWI operators to receive training and qualification through a State-approved training program; (5) requiring facilities to develop a waste management plan instead of banning materials from waste streams; (6) revised text to clarify that the emission limits do not apply during periods when units are burning only pathological, chemotherapeutic, and/or low-level radioactive waste; (7) exemption for plants firing small amounts of hospital waste and/or medical/infectious waste (10 percent or less by weight); (8) allowing certain records to be maintained in either electronic or paper format without duplication; and (9) establishing emission limits for existing HMIWI that may be met with either a wet or dry scrubber. All of these changes are discussed further in sections III, IV, and V of this preamble and in ''Hospital/Medical/Infectious Waste Incinerators: Background Information for Promulgated Standards and Guidelines—Summary of Public Comments and Responses (EPA–453/R–97–006b). These changes improve the effectiveness and efficiency of the standards and guidelines without any reduction in environmental protection.

D. February 1995 Proposal

On February 27, 1995 (60 FR 10654), EPA published proposed NSPS and EG for HMIWI. The 1995 proposal was the result of several years of effort reviewing available information in light of the CAA requirements described above.

During the data-gathering phase of the HMIWI project, it was difficult to get an accurate count of the nationwide HMIWI population. In addition, it was difficult to find HMIWI with add-on air pollution control systems in place. Information from a few State surveys led to an estimated population of 3,700 existing HMIWI.

The 1995 proposed standards and guidelines contained HMIWI subcategories that were determined based on design differences among different types of incinerators: continuous, intermittent, and batch. These three design types roughly correlate to HMIWI size.

A few HMIWI with various levels of combustion control (no add-on air pollution control) were tested to determine the performance of combustion control in reducing HMIWI emissions. One HMIWI equipped with a wet scrubber (add-on control) was tested to determine the performance capabilities of wet scrubbing systems. A few other HMIWI equipped with dry scrubbing systems (add-on control) were tested to determine the performance capabilities of dry scrubbing systems. These systems were considered typical of air pollution control systems available at the time, and the data appeared to indicate that dry scrubbing systems could achieve much lower emissions than wet scrubbing systems.

As mentioned above, the MACT floor for new HMIWI is to reflect the emissions control achieved by the best controlled similar unit. Dry scrubbing systems were identified on at least one HMIWI in each of the three subcategories (continuous, intermittent, and batch). Consequently, the MACT floor emission levels for the 1995 proposed NSPS reflected the performance capabilities of dry scrubbing systems.

For existing HMIWI under the 1995 proposed emission guidelines, State regulations and permits were used to calculate the average emission limitation achieved by the best performing 12 percent of units. These results were then compared with the results of the emission tests on wet and dry scrubbing systems. This comparison led to the conclusion that the 1995 proposed MACT floor for existing HMIWI would require the use of a dry scrubbing system, even for small existing batch HMIWI.

Following determination of the HMIWI population, subcategories, performance of technology, and MACT floors, the CAA requires EPA to consider standards and guidelines that are more stringent than the floors. However, because the MACT floors calculated for the 1995 proposal were so stringent, EPA was left with few options to consider. Emission limits reflecting the capability of dry scrubbing systems with carbon were proposed for all sizes and types of new and existing HMIWI.

A proposal is essentially a request for public comment on the information used, assumptions made, and conclusions drawn from the evaluation of available information. Following the 1995 proposal, more than 700 comment letters were received, some including new information and some indicating that commenters were in the process of gathering information for EPA to consider. The large amount of new information that was ultimately submitted addressed every aspect of the 1995 proposed standards and guidelines, including: the existing population of HMIWI, HMIWI subcategories, the performance capabilities of air pollution control systems, monitoring and testing, operator training, alternative medical waste treatment technologies, and the definition of medical waste. In almost every case, the new information led to different conclusions, as outlined below.

E. June 1996 Re-Proposal

On June 20, 1996, EPA published a **Federal Register** document to: (1) Announce the availability of the new information received following the 1995 proposal, (2) review EPA's assessment of the new information, (3) provide EPA's inclinations as to how the new information might change the final standards and guidelines, and (4) solicit comments on EPA's assessments and inclinations. In the June 20, 1996 **Federal Register** document, EPA indicated that the notice was not a re-

proposal, but merely a notice of supplemental information. However, some commenters stated that the 1996 notice should be considered a re-proposal. Upon consideration of these comments, EPA now considers the 1996 notice to have been a re-proposal. The 1996 notice included all of the elements of a re-proposal, including: A new inventory of sources; new subcategories; revised assessments of emissions and performance of technology; new MACT floors; new regulatory options; revised cost, environmental, and economic impacts; an indication of EPA's selection of MACT; and a request for public comment. More importantly, virtually every aspect of the 1995 proposal was changed significantly by the 1996 notice, making most of the analyses and conclusions from the 1995 notice irrelevant. Therefore, in today's final rule, HMIWI which commenced construction after June 20, 1996 are considered new sources subject to the NSPS under Subpart Ec, and HMIWI which commenced construction on or before June 20, 1996 are considered existing sources subject to the EG under subpart Ce.

The 1996 re-proposal served as a response to most comments on the 1995 proposed rule. Comments on miscellaneous issues that were not addressed in the 1996 re-proposal notice are summarized and responded to in ''Hospital/Medical/Infectious Waste Incinerators: Background Information for Promulgated Standards and Guidelines—Summary of Public Comments and Responses'' (EPA–453/R–97–006b). The 1996 re-proposal notice discussed the reanalyses of new information that led to changes in the 1995 proposed standards and guidelines. Presented below is a brief summary of the reanalyses that occurred following the 1995 proposal and a discussion of the EPA's inclinations that were introduced in the 1996 re-proposal.

Following the 1995 proposal, a number of comments were received regarding the EPA's inventory of existing HMIWI. Most commenters felt that the EPA's inventory was inadequate and should be updated. In response to these concerns, the EPA compiled a new inventory of existing HMIWI based on information received from the American Hospital Association, State agencies, HMIWI vendors, commercial medical waste disposal companies, and other stakeholders. After several revisions, the final HMIWI inventory contained approximately 2,400 existing HMIWI.

The Agency also reanalyzed the HMIWI subcategories based on the new information received after the 1995 proposal. In the 1996 re-proposal, the Agency stated that it was inclined to subcategorize the new and existing population of HMIWI into three subcategories based on waste charging capacity: small (≤200 lb/hr), medium (>200 and ≤500 lb/hr) and large (>500 lb/hr). While these subcategories were based on HMIWI size, they also reflect design differences among HMIWI.

Directly related to the issue of subcategorizing HMIWI by size is the question of how to determine HMIWI size in a manner that is consistent, uniform, and applicable to all HMIWI covered under the standards and guidelines. In the 1996 re-proposal, the EPA stated that it was inclined to base HMIWI capacity on either: (1) Volumetric waste burning capacity factors developed using the design heat release rate of the HMIWI and the heat content of medical waste or (2) an enforceable limit that would restrict waste charge rate.

At the time of the 1995 proposal, relatively few emission test reports were available to the EPA from which to draw conclusions regarding the performance capabilities of various air pollution control systems. Many commenters believed that EPA misjudged the performance capabilities of various air pollution control technologies, especially the capabilities of wet scrubbing systems. Following the 1995 proposal, a number of emission test reports were submitted to EPA. The EPA reviewed the data contained in these emission test reports and, as a result, EPA's conclusions regarding the performance capabilities of various air pollution control technologies were revised and presented in the 1996 re-proposal.

As discussed earlier, the new information submitted led to changes to the HMIWI inventory, subcategories, and conclusions about the performance of technology. Because these factors can influence the MACT floors, a review of the MACT floors was conducted. The recalculated MACT floors and the new conclusions regarding the performance capabilities of air pollution control technologies led to new conclusions regarding what technologies HMIWI would have to use to achieve the MACT floors.

In the 1996 re-proposal, the EPA defined regulatory options more stringent than the MACT floors for new and existing HMIWI and presented the impacts of the regulatory options. After reviewing the emissions reductions that could be achieved and the impacts of the regulatory options, the EPA presented its inclinations as to which emission levels the final MACT standards and guidelines might reflect. For new medium and large HMIWI, the EPA stated that it was inclined to adopt emission limits that could be achieved with good combustion followed by a high efficiency wet scrubber and a DI/FF system with carbon (i.e., combined dry/wet scrubber with carbon). The EPA stated that it was inclined to adopt emission limits that could be achieved with good combustion and a moderate efficiency wet scrubber for new small HMIWI and for medium existing HMIWI. For large existing HMIWI, the EPA stated that it was inclined to adopt emission limits that could be achieved with the use of good combustion and a high efficiency wet scrubber. The EPA offered no inclinations for the emission limits for small existing HMIWI. Instead, the EPA discussed the regulatory options and impacts for small existing HMIWI and solicited comments on which emission levels would be suitable for the final guidelines.

Many comments were also received regarding the 1995 proposed testing and monitoring requirements. Commenters noted that the proposed 4-hour test run was much longer than the more conventional test run of about 1-hour. Commenters also noted that many hospitals and health care facilities would normally not have sufficient waste on hand to accommodate three, 4-hour test runs and the 1995 proposed emission testing requirements would substantially increase the costs associated with emission testing. In response to these comments, the EPA stated in the 1996 re-proposal that it was inclined to adopt requirements that EPA test methods be followed when performing emissions testing to determine compliance. This requirement would ensure that compliance testing follows the same procedures used to generate the emission data upon which the emission limits in the regulation were based. In most cases, three test runs of about 1 hour each would be necessary to determine compliance. An exception to this requirement would be emission testing to measure dioxin/furan emissions. The procedures outlined in the EPA test method frequently lead to test runs longer than 1 hour to ensure sufficient sample is gathered to accurately measure dioxin/furan emissions.

Numerous comments were received on the 1995 proposed annual emission testing requirements. While some commenters supported the annual testing requirements, others felt that the proposed requirements for inspections, monitoring, and operator training were sufficient and much less expensive than

annual testing. Some commenters suggested that the annual emission test requirement be replaced with a requirement for annual equipment inspection and maintenance. Many of the commenters supportive of the proposed inspection requirements, however, suggested that the requirement for a ''third party'' inspection be deleted. Therefore, EPA stated in the 1996 re-proposal that it was inclined to include inspection and maintenance requirements wherever annual stack testing is not required and that the inspection would not have to be conducted by a third party.

To consider comments on the 1995 proposal regarding the frequency of emission testing and the proposed inspection and monitoring requirements, EPA presented a matrix of testing and monitoring options and their associated costs in the 1996 re-proposal. The EPA noted that almost all of the emission testing and monitoring options under consideration cost more than the incinerator or emission control system that would be installed to meet the emission limits in the regulations. Consequently, the Agency stated that it was inclined to include monitoring of operating parameters and routine Method 9 opacity tests (instead of CO and opacity CEMS) in the final regulations to minimize costs.

With regard to specific air pollution control device (APCD) operating parameters to be monitored, the Agency stated that it was inclined to require monitoring of the same parameters as outlined in the 1995 proposal for dry scrubbers, and the following for wet scrubbers: Scrubber exit temperature, scrubber liquor pH, scrubber liquor flow rate, and energy input to the scrubber (e.g., pressure drop or horsepower).

The EPA also stated in the 1996 re-proposal that it was inclined to require initial and repeat stack testing (annual/skip testing) where the regulations are based on good combustion and wet and/or dry scrubbing systems; and initial stack testing and routine inspections where the regulations are based on the use of good combustion alone. With the annual/skip testing requirement, emission tests would be required for the first 3 years. If these tests show that the facility was in compliance each of these 3 years, then subsequent testing would be done every third year. Under the inclinations presented in the 1996 re-proposal, annual or skip emission testing would only require emission testing of a few key or critical pollutants (i.e., only those necessary to gain a good indication that the air pollution control system is operating properly).

A large number of comments were received on the 1995 proposed definition of medical waste. The majority of the commenters stated that the proposed definition of medical waste was too broad and should be narrowed. The commenters believed that the proposed definition would be adopted by other regulatory agencies, and as the definition became more widespread, that it would eventually force all health care facilities to handle most of their waste as if it were infectious. This would result in an increase in the volume of medical waste requiring special handling, which in turn would result in increased costs to dispose of waste from health care facilities. These commenters stated that health care facilities should be viewed as generating two waste streams: A medical waste stream, which is usually defined by the potential for disease transmission and requires special handling; and a noninfectious waste or ''health care trash'' waste stream, which has no potential for infection and is treated and handled as municipal waste. The commenters urged EPA to narrow the definition of medical waste used in the HMIWI regulations to one that includes only the infectious portion of the waste stream.

In response to the comments concerning the 1995 proposed definition of medical waste, the EPA stated in the 1996 re-proposal that it was inclined to adopt a definition of medical waste that focuses on the infectious or potentially infectious portion of the overall medical waste stream. Given the confusion and number of varying definitions of medical waste in use at the Federal, State and local levels, the EPA stated that it was inclined to adopt a definition of medical waste for the HMIWI regulations from among those definitions already in use. Specifically, the EPA stated that it was inclined to adopt the New York State Department of Health (NYSDOH) definition of medical waste.

In the 1996 re-proposal, the EPA also stated that it was inclined to exclude crematories and incinerators used solely for burning pathological waste (human or animal remains and tissues), incinerators used solely for burning ''off-spec'' or ''out of date'' drugs or pharmaceuticals, and incinerators used solely for burning radioactive-type medical wastes from the HMIWI regulations. The EPA further stated that it was inclined to adopt separate regulations for pyrolysis treatment technologies and requested comment on the merits of continued development of separate pyrolysis regulations.

F. Stakeholders and Public Involvement

Throughout the development of the standards and guidelines, EPA conducted meetings with stakeholders to explain EPA conclusions and solicit comments, data, and information. Numerous discussions were held with governmental entities, industry representatives, and environmental groups including, but not limited to, the following: the U.S. Conference of Mayors; the National League of Cities; the National Association of City and County Health Officials; the National Association of Counties; the National Association of Public Hospitals; the Department of Defense; the Department of Veterans Affairs; the American Hospital Association; the Medical Waste Institute; the Sierra Club; the Natural Resources Defense Council; vendors of pyrolysis units, HMIWI, continuous emission monitoring systems, and air pollution control technologies; and the general public.

The standards and guidelines being adopted today were first proposed in the **Federal Register** on February 27, 1995 (60 FR 10654). The preambles for the 1995 proposed standards and guidelines described the rationale for the proposed standards and guidelines. Following the 1995 proposal, the EPA provided interested persons the opportunity to comment through a written comment period and held a public hearing. The public comment period lasted from February 27, 1995 to April 28, 1995 and all late comments were accepted. Over 700 comments were received from private citizens, industry representatives, environmental groups, and governmental entities. Several public meetings and meetings with industry stakeholders were held following the 1995 proposal to discuss EPA's assessment of new information submitted with comments, to gather additional information, and to solicit further comments. As discussed above in sections II.D and II.E, the comments and new information received following the 1995 proposal led to numerous changes to the standards and guidelines.

On June 20, 1996, EPA re-proposed the standards and guidelines in the **Federal Register**. Following the 1996 re-proposal, the EPA held a public meeting to review the contents of the re-proposal and to answer questions so that interested parties could better prepare their written comments. The comment period remained open from June 20, 1996 until August 8, 1996. Again, late comments were accepted. Nearly 70 comments were received. The comments received following the 1996 re-proposal were carefully considered

and changes were made to the HMIWI standards and guidelines where appropriate. Sections III, IV, and V of this preamble discuss the responses to comments on the standards and guidelines that address the major concerns of the commenters on the 1996 re-proposal.

III. Considerations in Developing the Final Standards and Guidelines

Following the June 20, 1996 re-proposal, the EPA received numerous comments concerning applicability of the standards and guidelines, pollution prevention, and the testing and monitoring requirements. Special consideration was given to these issues when developing the final HMIWI standards and guidelines. This section discusses these issues and changes, if any, that were made to the final HMIWI standards and guidelines following the 1996 re-proposal. Additional discussion and responses to specific concerns regarding these and other issues are provided in ''Hospital/Medical/ Infectious Waste Incinerators: Background Information for Promulgated Standards and Guidelines—Summary of Public Comments and Responses'' (EPA–453/ R–97–006b).

A. Applicability

A great deal of interest and discussion has taken place regarding which incinerators should be subject to this rule and which should not. All comments have been considered and the following sections present EPA's final decisions.

1. Definition of Medical Waste

This section discusses the evolution of the definition of medical waste used in determining the applicability of the HMIWI standards and guidelines. In the 1996 re-proposal ''medical waste'' was the term used to describe what is today called ''medical/infectious waste'' in the final HMIWI standards and guidelines. Similarly, the term ''medical waste incinerator'' or ''MWI'' was used to describe what is called ''hospital/ medical/ infectious waste incinerator'' or ''HMIWI'' in the standards and guidelines promulgated today.

Section 129 of the CAA directs the EPA to adopt regulations for solid waste incineration units that combust ''hospital waste, medical waste, and infectious waste.'' Section 129(g)(6) states that the term ''medical waste'' shall have the meaning ''established by the Administrator pursuant to the Solid Waste Disposal Act.'' For the 1995 proposed air emission standards and guidelines for ''MWI,'' EPA adopted the definition of ''medical waste'' from the solid waste regulations codified in 40 CFR part 259, subpart B. As a result, medical waste was defined broadly as any solid waste that is generated in the diagnosis, treatment, or immunization of human beings or animals, in research pertaining thereto, or in the production or testing of biologicals. The broad definition of medical waste in the 1995 proposal was not intended to be used to identify ''infectious'' or ''potentially infectious'' items in the health care waste stream. The EPA's only intention was to define those items likely to be burned in an ''MWI'' for the sake of defining and regulating the air emissions from incinerators used to burn ''hospital waste, medical waste, and infectious waste.''

As discussed earlier, the majority of the comments on the 1995 proposed definition of medical waste stated that the proposed definition was too broad and should be narrowed. Consequently, the 1996 re-proposal announced EPA's inclination to adopt an existing and more narrow definition of medical waste for the purpose of regulating ''MWI.'' Specifically, the EPA stated that it was inclined to adopt the definition of medical waste created by the New York State Department of Health (NYSDOH). While inclined to adopt the NYSDOH definition, the EPA stated in the 1996 re-proposal that it was also considering definitions of medical waste adopted by other regulatory agencies and national associations as well as the 1995 proposed definition. The EPA solicited public comment on the merits of each definition as well as other definitions EPA should consider.

Following the 1996 re-proposal, several commenters supported a definition of medical waste that is limited to potentially infectious materials and several commenters agreed that the NYSDOH definition of medical waste is appropriate. Other commenters suggested that the EPA Office of Solid Waste (OSW) definition of regulated medical waste (RMW) is more appropriate than the NYSDOH definition because Congress intended for EPA to use the Solid Waste Disposal Act (SWDA) definition.

On the other hand, several commenters argued that a broad definition of medical waste is appropriate. The commenters stated that anything burned in an incinerator at a health care facility should be classified as medical waste and pointed out that the CAA requires EPA to regulate emissions from solid waste incineration units ''combusting hospital waste, medical waste and infectious waste.'' The commenters contended that facilities operating onsite incinerators would use them primarily for noninfectious waste, which produces emissions similar to medical waste when burned.

The EPA has concluded that the Medical Waste Tracking Act (MWTA) definition of regulated medical waste is the most appropriate definition of medical/infectious waste for the final HMIWI standards and guidelines. As noted in the proposal and re-proposal, the EPA considered several definitions for purposes of these regulations (e.g., OSHA, NYSDOH, MWTA, AHA). Although the various definitions are not identical, they cover many of the same materials. After considering the comments received, the EPA today is promulgating the MWTA definition under the co-authority of section 2002 of the SWDA, 42 U.S.C. 6912, and sections 129 and 301 of the CAA, 42 U.S.C. 7429 and 7601.

The EPA believes the MWTA definition is the most appropriate because it includes the materials of concern, and will lead to the least confusion in the regulated community because it is a familiar definition. In addition, the MWTA definition has undergone public comment at the Federal level, during both the rulemaking under the MWTA, as well as rulemaking on these regulations. The EPA emphasizes that the MWTA definition being promulgated today is solely for purposes of determining which incineration units are covered by the HMIWI regulations under section 129 of the CAA. It is not for purposes of determining applicability of SWDA requirements. THE MWTA definition, however, does not include hospital waste; thus, EPA also is promulgating today under authority of sections 129 and 301 of the CAA, 42 U.S.C. 7429 and 7601, a definition of hospital waste.

The MWTA differentiates between infectious and noninfectious wastes. The MWTA definition of RMW includes seven classes of waste which are very similar to the classes of infectious waste included in the NYSDOH definition. However, the MWTA definition of RMW is broader than the NYSDOH definition of medical waste because the MWTA definition includes some items (e.g., intravenous bags) which may not be infectious, but are aesthetically unpleasing. The MWTA definition does not include hazardous waste; household waste; ash from incineration of medical/ infectious waste; human corpses, remains, and anatomical parts intended for interment or cremation; or domestic sewage materials.

The EPA recognizes that the MWTA definition does not fully encompass the terms ''hospital waste, medical waste, and infectious waste.'' The MWTA definition, as well as other definitions considered for the final HMIWI regulations, cover ''medical waste and infectious waste,'' but do not cover ''hospital waste.'' Commenters are correct in pointing out that the emissions from combustion of hospital waste are very similar to emissions from the combustion of medical/infectious waste. Therefore, the final HMIWI standards and guidelines contain definitions for ''hospital'' and ''hospital waste'' and the definition of ''medical/infectious waste'' (MWTA definition). The definitions of ''hospital'' and ''hospital waste'' will subject incinerators located at hospitals to the final standards and guidelines, whether they burn ''infectious'' waste, ''noninfectious'' waste, or a combination.

Commenters on the 1995 proposed regulations stated there are very few, if any, incinerators that are used by hospitals to burn only noninfectious hospital trash. Consequently, this inclusion of ''hospital waste'' along with ''medical/infectious waste'' should: minimize the concern about the overly broad definition of medical waste; cover the same incinerators as envisioned in the 1995 proposal and 1996 re-proposal, resulting in the same emission reductions without imposing additional costs; and satisfy the CAA requirement to regulate solid waste incinerators combusting ''hospital waste, medical waste, and infectious waste.'' On the other hand, section 129 directs EPA to develop regulations for four categories of solid waste incinerators. Because municipal waste combustors (MWC), industrial/commercial waste incinerators, and other solid waste incinerators sometimes burn small amounts of hospital waste and/or medical/infectious waste, and because these other categories are already or will be subject to section 129 regulations, the final HMIWI regulations focus on incinerators whose primary purpose is the disposal of hospital waste and/or medical/infectious waste in an effort to avoid duplicative requirements. Combustors subject to subparts Ea, Eb, or Cb (the NSPS and EG for MWC larger than 250 tons per day) have been excluded from coverage under the HMIWI regulations. In addition, any incinerator which burns 10 percent or less by weight hospital waste and medical/infectious waste is not subject to the final HMIWI standards and guidelines. This 10 percent provision is discussed further in section A.2 ''Co-fired Combustors'' (below).

The primary purpose of the MWTA definition of medical waste as used for the HMIWI standards and guidelines is to define items combusted in an HMIWI, and not to define items which could transmit disease. Only a small fraction of ''medical/infectious'' waste is truly ''infectious.'' The EPA believes that to add or remove specific items to or from the MWTA definition, as suggested by some commenters, would create additional regulatory confusion because the revised definition would essentially become a new definition of medical waste if altered. Any waste excluded from the MWTA definition is either covered now or will be covered in the future by other solid waste incinerator regulations.

The final standards and guidelines will apply to hospital/medical/infectious waste incinerators. It should be noted that the definition of medical/infectious waste adopted for the HMIWI regulations is not the government-wide Federal definition, or even the Agency-wide EPA definition of infectious waste. The medical/infectious waste definition contained in the final regulations promulgated today is for use in determining applicability of the HMIWI standards and guidelines only. It should also be noted that ''hospital waste'' is simply waste generated at a hospital. Most of the waste generated at a hospital (85 to 90 percent or more) is simply municipal-type waste that may be recycled or disposed without special treatment. The use of the term ''hospital waste'' in these regulations is for use in determining applicability of the HMIWI standards and guidelines only.

2. Co-fired Combustors

In the 1996 re-proposal, the EPA provided no inclinations regarding the applicability of the HMIWI regulations to combustors that co-fire medical waste with other fuels or wastes. Some examples of units that might be used to co-fire medical waste along with other fuels or wastes include municipal waste combustors (MWC), boilers, and industrial/commercial waste incinerators. During the public comment period following the 1996 re-proposal, several comments were received questioning the applicability of the HMIWI regulations to units that co-fire medical waste with other fuels or wastes.

One commenter provided information on a circulating fluidized bed combustor (CFBC) steam plant which co-fires coal and medical waste. The commenter noted that traditional HMIWI burn materials with low sulfur content and that the proposed SO_2 emission limit was arbitrarily set higher than actual HMIWI emissions. The commenter requested that the SO_2 emission limit be raised to 100 ppm to accommodate the CFBC without affecting other incinerators that burn medical waste.

Other commenters requested that ''potentially infectious'' medical waste and ''off-spec'' or ''out-of-date'' pharmaceuticals be allowed to be combusted in MWC along with municipal solid waste (MSW) without subjecting MWC to the HMIWI rules. The commenters noted that MWC which co-combust municipal and medical waste are regulated under the MWC emission standards. The commenters recommended that an exclusion be written into the final rule that will allow MWC combusting a minimal amount of medical waste (up to 10 percent of the waste stream) to be excluded from the HMIWI rule. The commenters suggested that, if EPA feels that co-combustion of MSW and medical waste in a small MWC not covered under the MWC standards is an environmental threat, that co-combustion should not be allowed in MWC burning less than 40 tons per day. Other commenters stated that small MWC not regulated under the MWC standards should not be allowed to accept medical waste without complying with the HMIWI regulations.

Other commenters requested that a ''de minimis'' quantity exemption be allowed for facilities that incinerate insignificant quantities of medical waste. Some commenters requested that clinical waste in the amount of 5 to 10 percent of the total waste stream be allowed to be disposed of in a pathological waste incinerator.

Section 129 requires the EPA to develop NSPS and EG for MWC, HMIWI, industrial/commercial waste incinerators, and ''other'' solid waste incinerators. The final NSPS and guidelines applicable to MWC with capacities of greater than 40 tons/day were promulgated in December 1995, but have since been partially vacated and remanded. In this case, it is not the EPA's intent for MWC to be dually covered under both the MWC regulations and the HMIWI regulations. Therefore, combustors subject to Subparts Ea, Eb, or Cb (the NSPS and EG for MWC larger than 250 tons/day) have been excluded from coverage under the HMIWI regulations regardless of the amount of hospital waste or medical/infectious waste combusted. As regulations are developed under Section 129 for the other categories of solid waste incinerators, EPA will make clear which regulations apply to which incinerators. In some cases, incinerators

may be subject to more than one regulation.

Commenters requesting that MWC, boilers, and other industrial processes that co-fire medical waste be exempted from coverage under the HMIWI regulations generally seem to agree that these units combust no more than 10 percent hospital waste and/or medical/infectious waste. Therefore, the final HMIWI NSPS and guidelines contain the provision that any incinerator or industrial process that combusts less than or equal to 10 percent hospital waste and medical/infectious waste (by weight) is not subject to the HMIWI NSPS and guidelines provided that the facility notifies the Administrator of an exemption claim and maintains records of the amount of hospital waste, medical/ infectious waste, and other fuels or wastes combusted.

As discussed in section A.3 ''Waste Types'' (below), ''off-spec'' or ''out-of-date'' drugs are not considered to be medical/infectious waste as defined in the final HMIWI regulations and are not considered to be hospital waste, unless disposed with the hospital's waste. ''Off-spec'' or ''out-of-date'' drugs are viewed the same as other fuels or wastes (e.g., municipal waste, coal, etc.) under HMIWI regulations. Therefore, incinerators that combust waste pharmaceuticals (i.e., ''off-spec'' or ''out-of-date'' drugs), and combust 10 percent or less hospital waste and medical/infectious waste (by weight) are not subject to the HMIWI regulations. However, any incinerator that combusts waste pharmaceuticals along with more than 10 percent hospital waste and medical/infectious waste is subject to the HMIWI regulations.

As also discussed in section A.3 ''Waste Types'' (below), pathological waste, chemotherapeutic waste, and low-level radioactive waste are considered ''excluded'' wastes. While these wastes sometimes meet the definition of hospital waste or medical/infectious waste, they are viewed the same as ''other'' fuels or wastes (e.g., municipal waste, coal, etc.) when calculating the amount of hospital waste and medical/infectious waste burned in a co-fired combustor. For example, a combustor burning 90 percent pathological waste with 10 percent hospital waste is a co-fired combustor, even if the pathological waste meets the definition of medical/infectious waste. However, any incinerator that combusts pathological, chemotherapeutic, and/or low-level radioactive waste along with more than 10 percent of other materials meeting the definition of hospital waste and/or medical/infectious waste is subject to the HMIWI regulations.

While incinerators that burn 10 percent or less hospital waste and medical/infectious waste are excluded from the HMIWI regulations, this exclusion does not mean that EPA will not develop regulations which will cover these units in the future. The NSPS and EG that were recently remanded for MWC with capacities between 40 tons/day and 250 tons/day will be revised and repromulgated. Furthermore, the CAA directs the EPA to develop regulations for all solid waste incinerators, including MWC with capacities less than 40 tons/day. The EPA has announced that regulations for other solid waste incinerators will be developed by the year 2000. Thus, burning of hospital waste or medical/infectious wastes in other solid waste incineration units will be covered by regulations developed within the next few years. Exclusion of incinerators that burn small amounts of hospital waste or medical/infectious waste from the HMIWI regulation is only a temporary deferment from regulation if these units are not presently regulated under section 129.

3. Waste Types

In the 1996 re-proposal, the EPA stated that it was inclined to exclude crematories and incinerators used solely for burning pathological waste from coverage under the HMIWI regulations. The EPA also stated that it was inclined to exclude incinerators used solely for burning low-level radioactive waste or ''off-spec'' and ''out-of-date'' pharmaceuticals. This section discusses the major public comments received regarding exemption of specific wastes from the HMIWI standards and guidelines.

Several commenters requested that crematories and incinerators used solely for burning pathological waste be excluded from the HMIWI regulation. One commenter questioned whether animal waste is to be included, excluded, or partially excluded from the regulation. Another commenter stated that there are no effective alternative disposal options for pathological waste, especially for large domestic animal carcasses (i.e., cows and horses). Several commenters also requested that incinerators used to burn only ''off-spec'' and ''out-of-date'' drugs or low-level radioactive waste be excluded from the regulation. One commenter stated that crematories and incinerators used to burn drugs, low-level radioactive waste, and pathological waste are already covered under other regulations, or will be covered under regulations developed through EPA's Industrial Combustion Coordinated Rulemaking (ICCR) project. Other commenters urged EPA to exclude units permitted under section 3005 of the SWDA from the HMIWI rule. One commenter argued that section 129 of the CAA statutorily prohibits EPA from regulating in the HMIWI rule hazardous waste combustion units which are to be regulated under the Resource Conservation and Recovery Act (RCRA).

Pathological waste, low-level radioactive waste, and chemotherapeutic waste are different from most hospital waste and medical/infectious waste and are often burned in incinerators which burn these wastes exclusively. While these wastes often times meet the definition of hospital waste or medical/infectious waste, the combustion of these materials warrants separate consideration. Pathological waste, chemotherapeutic waste, and low-level radioactive waste are considered ''excluded'' wastes, regardless of whether the waste meets the definition of hospital waste or medical/infectious waste in the HMIWI regulations. Consequently, in determining the amount of hospital waste and medical/infectious waste burned in a co-fired combustor, these ''excluded'' wastes are included in the calculation as ''other'' wastes (they do not count toward the 10 percent hospital waste and medical/infectious waste), as discussed above in section A.2. In addition, incinerators that are otherwise subject to the HMIWI regulations are exempt during periods when only pathological waste, low-level radioactive waste, and/or chemotherapeutic waste is burned. These latter units must keep records of the periods of time when only pathological, chemotherapeutic, and low-level radioactive wastes are burned.

With regard to crematories, human remains intended for interment or cremation are not hospital waste or medical/infectious waste. Consequently, crematories are not subject to the HMIWI regulations unless they burn waste that meets the definition of hospital waste or medical/infectious waste.

While pathological incinerators, chemotherapeutic and low-level radioactive waste incinerators, and crematories are excluded from the final HMIWI standards and guidelines, this exclusion does not mean that EPA will not develop regulations which will cover these incinerators in the future. The CAA directs the EPA to develop regulations for all solid waste incinerators. The EPA is developing separate regulations which will cover these units as part of the ''other'' category of solid waste incineration

units within the ICCR project. The EPA has announced that regulations for other solid waste incinerators will be developed by the year 2000. Thus, cremation and burning of pathological, chemotherapeutic, and low-level radioactive wastes will be covered by regulations developed within the next few years. Exclusion of crematories and incinerators burning pathological, chemotherapeutic, and low-level radioactive waste from the HMIWI regulation is only a temporary deferment.

Pharmaceutical wastes such as ''off-spec'' or ''out-of-date'' drugs are not considered to be medical/infectious waste as defined in the final HMIWI regulations. Also, pharmaceutical wastes are not considered to be hospital waste unless generated at a hospital and disposed with the hospital's waste. In the HMIWI regulations ''hospital waste'' is defined as discards generated at a hospital, excluding human remains and unused items returned to the manufacturer. Thus, ''out-of-date'' drugs returned by a hospital to a pharmaceutical company for disposal are not considered hospital waste. Waste pharmaceuticals are viewed the same as other fuels and wastes (e.g., municipal waste, coal, etc.) under the HMIWI regulations. Therefore, incinerators that combust waste pharmaceuticals, and combust 10 percent or less hospital waste and medical/infectious waste (by weight) are not subject to the HMIWI regulations. However, any incinerator that combusts waste pharmaceuticals along with more than 10 percent hospital waste and medical/infectious waste is subject to the HMIWI regulations.

Section 129(g)(1) of the CAA specifically exempts from the HMIWI NSPS and guidelines solid waste incinerators required to have a permit under section 3005 of the SWDA. To be consistent with section 129, the final HMIWI standards and guidelines specifically exempt incinerators permitted under section 3005 of the SWDA. In addition, the definition of medical/infectious waste in the final regulations specifically excludes hazardous waste identified or listed under the regulations in 40 CFR Part 261.

4. Cement Kilns

Some commenters pointed out that section 129 clearly addresses incinerators, not cement kilns. Commenters stated that HMIWI and cement kilns using medical waste as fuel are two completely different devices and should not be confused with each other or regulated under the same air emissions control standards. One commenter recommended that if EPA concludes that Congress intended to regulate cement kilns under section 129, EPA should not impose emission limitations and other requirements that were written for HMIWI on cement kilns.

The EPA disagrees with commenters that contend EPA has no authority to regulate cement kilns under section 129. Section 129(a)(1)(A) requires the Administrator to establish performance standards and other requirements for each category of solid waste incineration units. Congress specifically listed in section 129 various categories of solid waste incineration units that EPA must regulate. Section 129(g)(1) broadly defines solid waste incineration unit as ''a distinct operating unit of *any* facility which combusts *any* solid waste material * * *'' (emphasis added). This definition clearly indicates Congress' intent to regulate more than just incinerators because the definition sweeps within its scope any facility that is combusting any solid waste material.

Further evidence of EPA's authority to regulate cement kilns under section 129 is presented in ''Hospital/Medical/Infectious Waste Incinerators: Background Information for Promulgated Standards and Guidelines—Summary of Public Comments and Responses'' (EPA–453/R–97–006b). However, the EPA does recognize that cement kilns are different from HMIWI in size, design, and operation. Accordingly, the EPA is not regulating cement kilns under this regulation, but instead, is determining whether separate regulations under section 129 are appropriate for cement kilns combusting solid waste materials.

B. Pyrolysis Units

In the 1996 re-proposal, the EPA stated that it was considering a separate regulation for pyrolysis units that would look very similar to the HMIWI regulation in that it would contain definitions, emissions limitations, monitoring and testing requirements to demonstrate compliance, and reporting and recordkeeping requirements. However, the separate pyrolysis regulation would differ from the HMIWI regulations in that some definitions would be different, the emission limitations would, in many cases, be more stringent than the HMIWI regulations, and the monitoring and testing requirements would reflect the operating parameters that are unique to pyrolysis systems.

Following the 1996 re-proposal, several commenters encouraged EPA to promulgate separate standards for medical waste pyrolysis (MWP) units. One commenter noted that separate regulations would contain emission limits more stringent than the HMIWI regulations and reflect the unique features of pyrolysis units.

Other commenters suggested that EPA modify the 1995 proposed HMIWI regulations to include pyrolysis units and defer the final promulgation of separate pyrolysis regulations. The commenters stated that variations in the operating characteristics among pyrolysis technologies would make separate pyrolysis regulations unwieldy to implement at this time. The commenters requested that EPA modify the HMIWI regulations to provide flexibility if a specific operator training, siting, performance verification, compliance verification, monitoring, recordkeeping or reporting requirement does not directly apply to a pyrolysis system.

Other commenters stated that pyrolysis units are similar to conventional incinerators and requested that they be included under the HMIWI regulations. The commenters stated that, if EPA regulates pyrolysis units separately, that MACT floor levels should be based on available test data, and the pyrolysis regulation should be issued concurrently with the final HMIWI regulations.

The various arguments for and against developing separate regulations for pyrolysis units lead to three options for developing regulations for pyrolysis units: (1) Regulate pyrolysis under the standards and guidelines being promulgated today; (2) exempt pyrolysis units from the HMIWI regulations and simultaneously promulgate separate regulations for pyrolysis units; and (3) exempt pyrolysis units from the HMIWI regulation and defer the development of separate regulations.

Pyrolysis technology is different from conventional incineration. Because air is generally not used in the pyrolysis treatment process, the volume of exhaust gas produced from pyrolysis treatment is likely to be far less than the volume of gas produced from the burning of waste in an HMIWI. Although conventional combustion does not occur during pyrolysis treatment, there are some emissions from the pyrolysis process.

As discussed in the 1996 re-proposal, the EPA developed a draft regulation for pyrolysis units. The 1996 re-proposal pointed out that the draft regulatory text was incomplete and it included placeholders and requests for information where such information was lacking. The EPA requested

comments to help fill in the missing information.

Following the 1996 re-proposal, the EPA received information for use in developing the separate pyrolysis regulation from vendors of pyrolysis technology. As pointed out by one commenter and supported by the information received from pyrolysis vendors, there are variations in the operating characteristics among pyrolysis technologies that would make separate regulations for pyrolysis units very difficult to implement at this time. As a result, the EPA has concluded that sufficient information is not available to develop a separate and uniform regulation for pyrolysis technology that would contain requirements that are technically feasible for all pyrolysis units.

Because separate regulations for pyrolysis technology cannot be developed at this time, the EPA considered modifying the HMIWI regulations to include pyrolysis units. However, nearly all aspects of the HMIWI regulations would have to be altered to accommodate pyrolysis units including the format of the emission limits, the operator training requirements, siting requirements, the testing and monitoring requirements, and the reporting and recordkeeping requirements. Furthermore, the HMIWI subcategories and MACT floors would not be appropriate for pyrolysis units. Due to variations in the operating characteristics of pyrolysis technologies and the differences between HMIWI and pyrolysis technologies, it is unclear how the HMIWI regulations could be modified to feasibly cover pyrolysis technologies as well as HMIWI.

Section 129 requires EPA to develop NSPS and EG for ''solid waste incineration units * * * combusting hospital waste, medical waste, and infectious waste.'' As discussed above, pyrolysis and conventional incineration are not the same. Because regulations developed for HMIWI are not appropriate for pyrolysis technologies, pyrolysis treatment technologies have specifically been excluded from coverage under the final HMIWI standards and guidelines. The EPA may consider these devices in future regulatory development.

C. Waste Management Plans

During the public comment period following the 1996 re-proposal, several commenters stated that the EPA standards for HMIWI are reliant on pollution control and give little attention to pollution prevention. The commenters stated that recycling and pollution prevention measures could yield greater reductions in emissions than add-on controls alone. Some commenters stated that Congress intended for EPA to use process changes or substitution of materials to help eliminate emissions. Some commenters stated that dioxin/furan, HCl, and Hg emissions could be controlled through a pollution prevention program that reduces or eliminates incineration of chlorinated materials and batteries. One commenter requested that EPA suggest pollution prevention measures for controlling Hg as well as other pollutant precursors (i.e., lead, cadmium, chlorine, nitrogen, fluorine, and sulfur). The commenter maintained that the economic impact of the HMIWI regulations could be reduced significantly if EPA required medical facilities to institute pollution prevention techniques.

The types of materials sent to an HMIWI vary from facility to facility depending on facility operating practices, which are defined by purchasing decisions, waste handling procedures, and other practices that affect the types of materials incinerated.

In the February 1995 proposal, the EPA stated that it had no data to indicate the effects of waste handling practices on emissions of various pollutants and requested comments on the extent to which operating practices could influence emissions. To evaluate the effectiveness of waste segregation programs, the EPA specifically solicited detailed descriptions of programs and results of performance tests conducted to demonstrate pollutant emission levels from the HMIWI prior to implementation of the program and subsequent to implementation of the program. In addition, the EPA solicited comments on how such a program could be incorporated into the HMIWI regulations.

Following the 1995 proposal, the EPA received no data to conclusively indicate the effectiveness of waste segregation programs in reducing emissions from HMIWI. Therefore, the final HMIWI standards and guidelines are primarily based on air pollution controls rather than pollution prevention. However, as discussed in the 1996 re-proposal, EPA has included pollution prevention measurements in setting the Hg emission limit for good combustion. To ensure that emissions of Hg from facilities with good combustion controls meet the final emission guidelines for Hg, EPA is requiring that these facilities conduct a Hg emission test. If the facility fails the emission test, the facility will need to implement Hg pollution prevention measures or install an APCD to meet the emission limits.

The EPA has investigated the impacts on emissions of shifting the waste composition from chlorinated plastics to non-chlorinated polymers. However, the outcome of this investigation is inconclusive. A number of studies have concluded that the chlorine content of the waste is directly related to dioxin/furan emissions, while other studies suggest there is no relationship between the chlorine content of the waste and dioxin/furan emissions. At this point, the effectiveness of a pollution prevention program directed at reducing dioxin/furan emissions through shifting the waste composition from chlorinated plastics to nonchlorinated polymers would be questionable.

A number of health care facilities have implemented waste management measures to reduce the overall volume of waste. However, it should be stressed that each health care facility is unique and site-specific strategies must be developed that achieve the most efficient results. Through the development of individual waste management programs, health care facilities can achieve significant reductions in their waste stream, reduce the volume of waste to be incinerated, and thereby reduce the amount of air pollution emissions associated with that waste. Therefore, the final HMIWI standards and guidelines require that health care facilities which operate incinerators develop and implement a waste management plan.

The waste management plan would identify both the feasibility and the approach to separate certain components of solid waste from the health care waste stream in order to reduce the amount of toxic emissions from incinerated waste. The waste management plan may include elements such as paper, cardboard, plastics, glass, battery, or metal recycling; or purchasing recycled or recyclable products. A waste management plan may include different goals or approaches for different areas or departments of the facility and need not include new waste management goals for every waste stream. It should identify, where possible, reasonably available additional waste management measures, taking into account the effectiveness of waste management measures already in place, the costs of additional measures, the emission reductions expected to be achieved, and any other environmental or energy impacts they might have. A copy of the waste management plan would be submitted to EPA along with the results of the initial performance test demonstrating compliance with the emission limits. In addition, the waste

management plan may be reviewed by the Joint Commission on Accreditation of Health Care Organizations during the accreditation process.

Health care facilities are encouraged to review and incorporate into their waste management plans the waste minimization techniques discussed in ''An Ounce of Prevention: Waste Reduction Strategies for Health Care Facilities,'' which is published by the American Society for Health Care Environmental Services of the American Hospital Association. This document may be obtained by contacting AHA Services, Inc., P.O. Box 92683, Chicago, Illinois 60675–2683, or by calling 800–242–2626. The cost of the document is $50.00 plus $10.95 for shipping and handling. The document is available for public inspection at EPA's Air and Radiation Docket and Information Center (Docket A–91–61, item IV–J–124). See the ADDRESSES section at the beginning of this preamble for the location of the Docket. Note that because of copyright law, this document may not be copied. This document was approved for incorporation by reference by the Director of the Federal Register in accordance with 5 U.S.C. 552(a) and 1 CFR part 51.

D. Testing, Monitoring, and Inspection

Section 129(c) of the CAA requires the EPA to include emissions monitoring and testing requirements in the regulation. The purpose of these requirements is to allow the EPA to determine whether a source is operating in compliance with the regulations.

In the 1996 re-proposal, the EPA stated that it was inclined to adopt requirements that EPA test methods be followed when performing any emission testing required to determine compliance with the HMIWI regulations. In most cases, three test runs of about 1 hour each would be necessary to determine compliance. The EPA also stated in the 1996 re-proposal that it was inclined to include in-house inspection and maintenance requirements wherever annual stack testing was not required. To minimize costs, the EPA stated that it was inclined to include requirements for monitoring of operating parameters and routine Method 9 (stack opacity) testing in the final regulations instead of CO and opacity continuous emissions monitoring systems (CEMS) for onsite HMIWI. Where the regulations are based on wet and/or dry scrubbing systems, the EPA stated that it was inclined to require initial and repeat stack testing (annual/skip testing where annual testing is required for the first 3 years and, if these tests show compliance, subsequent testing would be done every third year). Where the regulations are based, in part, on the use of good combustion alone, the EPA stated that it was inclined to require initial stack testing and routine inspections. The EPA solicited public comment on all of the testing and monitoring inclinations presented in the 1996 re-proposal. In addition, because some CEMS vendors questioned the CEMS and parameter monitoring costs developed by EPA, the EPA solicited public comment on the costs of CEMS and monitoring of operating parameters.

Several comments concerning the EPA's inclinations for monitoring and testing were received following the 1996 re-proposal. One commenter requested that EPA require CEMS for CO, HCl, SO_2, NO_X, Hg, and PM. The commenter contended that CEMS for CO, HCl, SO_2, NO_X, Hg, and PM would eliminate the need for stack testing. The commenter stated that the only way to ensure compliance at all times, as mandated by the CAA, is through the continuous use of CEMS. One commenter stated that EPA should require continuous monitoring of CO emissions from all HMIWI, continuous opacity monitoring at large incinerators, and continuous monitoring of HCl emissions from very large (>1000 lb/hr) incinerators. The commenter indicated that continuous monitoring of CO and O_2 is the only way to ensure that good combustion is occurring. The commenter concluded that CO and O_2 ''process'' monitors should be sufficient for HMIWI with capacities less than 500 lb/hr. The commenter stated that EPA's inclination not to require continuous monitoring is based on inaccurate CEMS costs.

A number of commenters supported EPA's inclination to determine compliance using parameter monitoring and routine inspection and maintenance rather than CEMS. One of the commenters supported monitoring of operating parameters and routine Method 9 testing combined with initial stack testing and annual inspections to ensure compliance with the rule. Another commenter stated that an initial stack test for the primary pollutants and regular inspection, maintenance, and daily recording of operating parameters would be appropriate. One commenter stated that monitoring of operating parameters with no CEMS and substitute stack testing with annual inspections would provide an excellent means to attain low emissions for minimal costs for small HMIWI. Other commenters recommended monitoring operating parameters and routine Method 9 testing with initial stack testing and no repeat testing. Another commenter suggested that an initial performance test and monitoring is sufficient and that additional tests are not necessary especially given operator training, inspections, and monitoring.

The most direct means of ensuring compliance with emission limits is the use of CEMS. As a matter of policy, the first and foremost option considered by EPA is to require the use of CEMS to demonstrate continuous compliance with specific emission limits. Other options are considered only when CEMS are not available or when the impacts of including such requirements are considered unreasonable. When monitoring options other than CEMS are considered, there is always a tradeoff between the cost of the monitoring requirement and the quality of the information collected with respect to determining actual emissions. While monitoring of operations (operating parameters) cannot provide a direct measurement of emissions, it is usually much less expensive than CEMS, and the information provided can be used to ensure that the incinerator and associated air pollution control equipment are operating properly. This information provides EPA and the public with assurance that the reductions envisioned by the regulations are being achieved.

For the 1996 re-proposal, testing and monitoring costs were developed for a range of options, and the Agency concluded that the cost of CEMS were unreasonably high relative to the cost of the incinerators and air pollution control systems needed for compliance. Based on comments and information received as a result of the 1996 re-proposal, the cost estimates for CEMS and parameter monitoring have been revised. While the cost estimates for CEMS have been significantly reduced and additional costs have been included for parameter monitoring, it appears that the annual costs of monitoring requirements which include CEMS are still quite high compared to the cost of the incinerator and air pollution control device required to meet the emission limits.

A large HMIWI costs approximately $120,000/yr to operate, while an add-on APCD can cost from $150,000 to $300,000/yr to operate. The most comprehensive monitoring option including CEMS for HCl and CO costs about $95,000/yr. This option costs nearly as much to operate as the incinerator itself and could represent as much as half the cost of the APCD. In addition, the only emissions that are directly measured are HCl and CO. Consequently, the most comprehensive

monitoring option that could be selected for large HMIWI is considered unreasonable.

There are no direct measurements of dioxin/furan or toxic metals. Particulate matter and Hg CEMS are currently under development but have not been demonstrated in the United States to be capable of accurately and reliably measuring PM or Hg emissions for use in determining compliance with PM or Hg emission limits at this time. With regard to SO_2 and NO_X, the emission limits in the final regulations reflect uncontrolled emissions. Therefore, it is unreasonable to impose a cost (of monitoring) where no emission reduction benefit will be gained.

Looking at other options for large HMIWI, the only CEMS available are CO/O_2 and opacity. For a large HMIWI equipped with a sophisticated APCD like a wet scrubber, dry scrubber, or combined dry/wet scrubber, these CEMS provide very little information regarding the pollutants that are of most concern to the public (i.e., dioxin/furan and toxic metals). Consequently, because the APCD already represents a substantial increase in the cost of incineration and because the more comprehensive monitoring options do not provide much information regarding the pollutants of most concern, the final monitoring and testing requirements for HMIWI equipped with APCD reflect routine stack testing coupled with continuous monitoring of operating parameters.

Where incinerators are not equipped with add-on air pollution control (i.e., units utilizing good combustion alone), EPA agrees with commenters that CO provides the best measure of good combustion. However, regulations based on good combustion alone only apply to small existing HMIWI meeting certain ''remote'' criteria (see section V.B). For these small existing HMIWI using only good combustion, the incinerator costs about $35,000/yr to operate and the air pollution control costs about $10,000/yr to operate. Monitoring options including CO CEMS for compliance are clearly unreasonable at about $54,000/yr (five times the cost of the air pollution control). The monitoring option which includes a CO ''process'' monitor costs about $17,000/yr while the option that relies on operating parameters costs about $10,000/yr. The EPA does not believe that the CO ''process'' monitor provides enough additional information to justify the $7,000/yr additional cost, especially considering that the air pollution control only costs $10,000/yr. Consequently, where the regulations are based on good combustion alone, the monitoring requirements consist of an initial stack test coupled with continuous monitoring of operating parameters and annual inspections.

The specific values for operating parameters are chosen by the owner or operator and are established during the initial performance test demonstrating compliance with the emission limits. After the performance test, monitoring of the operating parameters is the only way to determine, on a continuous basis, whether the source is operating in compliance. Operation outside the bounds of an established operating parameter is a violation of an operating parameter limit. In addition, under certain conditions, operation outside the bounds of one or more parameter limits constitutes a violation of a specific emission limit. This latter provision was included in the 1995 proposed regulations and is retained in the final regulations. The owner or operator has the flexibility to choose the values for the operating parameters and may conduct repeated performance tests to ''fine tune'' the operating parameter limits, if desired.

With regard to the testing requirements, annual testing is required for the first 3 years. If these tests show that the facility is in compliance each of these 3 years, then subsequent testing would be done every third year. Initial testing includes testing for the following pollutants: PM, CO, HCl, dioxin/furan, Pb, Cd, Hg, and opacity. The annual/skip or ''repeat'' testing only includes testing for PM, CO, HCl, and opacity. Where good combustion alone serves as the basis for the emission limits, the Agency only requires facilities to perform an initial compliance test for PM, CO, dioxin/furan, Hg, and opacity, annual incinerator inspections, annual opacity testing, and parameter monitoring (charge rate and secondary chamber temperature). Minimum sampling times of 1 hour (4 hours for dioxin/furan) have been included in the final regulations for all HMIWI.

The ''repeat'' testing requirements will ensure, on an ongoing basis, that the APCD is operating properly, that no deterioration in performance has occurred, and that no changes have been made to the operating system or the type of waste burned. Where ''repeat'' testing is not required, annual inspections, annual opacity testing, and parameter monitoring will ensure that the HMIWI is in good working order. However, cost considerations were the only reason for excluding the repeat testing for units with good combustion alone. Good combustion alone with its associated monitoring are provided in order to minimize costs for a small number of incinerators in remote areas where alternatives to incineration might be unavailable. Initial testing for good combustion units includes testing for PM, CO, dioxin/furan, Hg, and opacity. The Hg testing is required to ensure that units are segregating Hg bearing wastes and meeting the Hg emission limit.

Rather than require third-party inspections, which could be burdensome for small remote facilities, the final guidelines allow for in-house equipment inspections. However, EPA plans to work with States to give higher priority to these small remote facilities in terms of enforcement inspections. Either the EPA or the State will inspect these small remote facilities annually for the first three years after the State plan is approved. Following the three-year period, these sources will be placed on the regular enforcement inspection schedule.

E. Operator Training and Qualification

The final operator training and qualification requirements are almost identical to those described in the 1996 re-proposal. The final requirements provide flexibility by allowing State-approved training and qualification programs. Where there are no State-approved programs, the final regulations include minimum requirements for training and qualification. The EPA has a training manual available through its Air Pollution Training Institute (APTI). For further information, contact APTI at (919) 541–2497. In addition, EPA plans to work with the American Hospital Association to develop a correspondence course for those facilities that may not have access to adequate training. As discussed above, EPA plans to work with States to give higher priority to the small remote units in terms of enforcement inspections, including a review of operator training.

IV. Standards of Performance for New Sources

This section presents a summary of the final standards, including identification of the source category and pollutants being regulated, and presentation of the final emission limits and their associated performance testing, monitoring, recordkeeping and reporting requirements. This section discusses the most significant changes to the standards presented in the June 20, 1996 **Federal Register** document. Also discussed in this section is the rationale for the selection of MACT and a summary of the impacts of the final standards.

A. Summary of the Standards

The final standards (subpart Ec) apply to each new HMIWI for which

construction commenced after June 20, 1996 or to an existing HMIWI for which modification commenced after March 16, 1998. Hospital/medical/infectious waste incinerators for which construction commenced on or before June 20, 1996 are not covered under the subpart Ec standards; they are considered existing sources and are subject to the guidelines under subpart Ce (see section V of this notice).

A HMIWI is defined as any device that combusts any amount of medical/ infectious waste or hospital waste. The terms medical/ infectious waste and hospital waste are discussed in section III.A and defined in § 60.51c. An incinerator is not subject to subpart Ec during periods when only pathological, low-level radioactive, or chemotherapeutic waste (all defined in § 60.51c) is burned provided that the owner or operator keeps records of the periods of time when only pathological, low-level radioactive, and/or chemotherapeutic waste is burned. Any combustor required to have a permit under section 3005 of the SWDA is exempt from subpart Ec as are incinerators subject to subpart Cb, Ea, or Eb. New incinerators, processing operations, or boilers that co-fire medical/infectious waste or hospital waste with other fuels or wastes and that combust 10 percent or less medical/ infectious waste and hospital waste by weight (on a calendar quarter basis) are not subject to the emission limits under subpart Ec, but must keep records of the amount of each fuel and waste fired.

The HMIWI source category is divided into three subcategories based on waste burning capacity: Small (≤200 lb/hr), medium (>200 to 500 lb/hr), and large (>500 lb/hr). Waste burning capacity is determined either by the maximum design capacity or by the ''maximum charge rate'' established during the most recent performance test. In other words, a source may change its size designation by establishing a ''maximum charge rate'' lower than its design capacity. For example, a ''medium'' unit with a design capacity of 250 lb/hr may establish a maximum charge rate of 200 lb/hr and be considered a ''small'' unit for purposes of the standards. Separate emission standards apply to each subcategory of new HMIWI. A summary of the final emission limits for new or modified HMIWI is presented in Table 3.

TABLE 3.—SUMMARY OF PROMULGATED EMISSION LIMITS FOR NEW HMIWI

Pollutant (test method)	Emission limits		
	Small HMIWI	Medium HMIWI	Large HMIWI
Particulate matter (EPA Method 5 or Method 29).	69 mg/dscm (0.03 gr/dscf)	34 mg/dscm (0.015 gr/dscf)	34 mg/dscm (0.015 gr/dscf).
Carbon monoxide (EPA Method 10 or Method 10B).	40 ppmv	40 ppmv	40 ppmv.
Dioxins/furans (EPA Method 23)	125 ng/dscm total CDD/CDF (55 gr/10^9 dscf) or 2.3 ng/dscm TEQ (1.0 gr/10^9 dscf).	25 ng/dscm total CDD/CDF (11 gr/10^9 dscf) or 0.6 ng/dscm TEQ (0.26 gr/10^9 dscf).	25 ng/dscm total CDD/CDF (11 gr/10^9 dscf) or 0.6 ng/dscm TEQ (0.26 gr/10^9 dscf).
Hydrogen chloride (EPA Method 26).	15 ppmv or 99% reduction	15 ppmv or 99% reduction	15 ppmv or 99% reduction.
Sulfur dioxide (testing not required).	55 ppmv	55 ppmv	55 ppmv.
Nitrogen oxides (testing not required).	250 ppmv	250 ppmv	250 ppmv.
Lead (EPA Method 29)	1.2 mg/dscm (0.52 gr/10^3 dscf) or 70% reduction.	0.07 mg/dscm (0.03 gr/10^3 dscf) or 98% reduction.	0.07 mg/dscm (0.03 gr/10^3 dscf) or 98% reduction.
Cadmium (EPA Method 29)	0.16 mg/dscm (0.07 gr/10^3 dscf) or 65% reduction.	0.04 mg/dscm (0.02 gr/10^3 dscf) or 90% reduction.	0.04 mg/dscm (0.02 gr/10^3 dscf) or 90% reduction.
Mercury (EPA Method 29)	0.55 mg/dscm (0.24 gr/10^3 dscf) or 85% reduction.	0.55 mg/dscm (0.24 gr/10^3 dscf) or 85% reduction.	0.55 mg/dscm (0.24 gr/10^3 dscf) or 85% reduction.

In addition to the emission limits, new or modified large HMIWI are subject to a 5 percent visible emission limit for fugitive emissions generated during ash handling and all new or modified HMIWI are subject to a 10 percent stack opacity limit. Performance tests for fugitive emissions from ash handling must be conducted using EPA Reference Method 22. Stack opacity must be determined using EPA Reference Method 9.

Table 4 summarizes the additional requirements for new or modified HMIWI under the NSPS, including the operator training and qualification requirements, siting requirements, compliance and performance testing requirements, monitoring requirements, and reporting and recordkeeping requirements. A summary of dates for compliance with the promulgated standards for new HMIWI is presented in Table 5. These dates apply to all new or modified HMIWI.

TABLE 4.—SUMMARY OF ADDITIONAL REQUIREMENTS UNDER THE NSPS FOR NEW HMIWI

Additional requirements
Operator Training and Qualification Requirements: • Complete HMIWI operator training course. • Qualify operators. • Maintain information regarding HMIWI operating procedures and review annually.
Siting Requirements: • Prepare a siting analysis that considers air pollution control alternatives that minimize, on a site-specific basis and to the maximum extent practicable, potential risks to public health and the environment.

TABLE 4.—SUMMARY OF ADDITIONAL REQUIREMENTS UNDER THE NSPS FOR NEW HMIWI—Continued

Additional requirements
Waste Management Plan: • Prepare a waste management plan that identifies the feasibility and approach to separate certain components of a health care waste stream. Compliance and Performance Testing Requirements: • Conduct an initial performance test to determine compliance with the PM, CO, CDD/CDF, HCl, Pb, Cd, and Hg emission limits and opacity limit, and establish operating parameters. • Conduct annual performance tests to determine compliance with the PM, CO, and HCl emission limits and opacity limit. • Facilities may conduct performance tests for PM, CO, and HCl every third year if the previous three HMIWI performance tests demonstrate that the facility is in compliance with the emission limits for PM, CO, or HCl. • Perform annual fugitive testing (large HMIWI only). Monitoring Requirements: • Install and maintain equipment to continuously monitor operating parameters including secondary chamber temperature, waste feed rate, bypass stack, and APCD operating parameters as appropriate. • Obtain monitoring data at all times during HMIWI operation. Reporting and Recordkeeping Requirements: • Maintain for 5 years records of results from initial performance test and all subsequent performance tests, operating parameters, any maintenance, the siting analysis, and operator training and qualification. • Submit the results of the initial performance test and all subsequent performance tests. • Submit reports on emission rates or operating parameters that have not been recorded or that exceeded applicable limits. • Provide notification of intent to construct, construction commencement date, planned initial start-up date, planned waste type(s) to be combusted, the waste management plan, and documentation resulting from the siting analysis.

NOTE: This table depicts major provisions of the NSPS and does not attempt to show all requirements. The regulatory text of Subpart Ec should be relied upon for a full and comprehensive statement of the requirements of the NSPS.

TABLE 5.—COMPLIANCE TIMES UNDER THE NSPS FOR NEW HMIWI

Requirement	Compliance time
Effective date	6 months after promulgation of NSPS.
Operator training and qualification requirements.	On effective date or upon initial start up, whichever is later.
Initial compliance test	On effective date or within 180 days of initial start up, whichever is later.
Performance test	Within 12 months following initial compliance test and annually thereafter. Facilities may conduct performance tests every third year if the previous three performance tests demonstrate compliance with the emission limits.
Operator parameter monitoring	Continuously, upon completion of initial compliance test.
Recordkeeping	Continuously, upon completion of initial compliance test.
Reporting	Annually, upon completion of initial compliance test; semiannually, if noncompliance.

NOTE: This table depicts major provisions of the NSPS and does not attempt to show all requirements. The regulatory text of Subpart Ec should be relied upon for a full and comprehensive statement of the requirements of the NSPS.

B. Significant Issues and Changes

The most significant changes to the standards made following the June 20, 1996 **Federal Register** document are discussed below. Further discussion of these changes as well as other comments and responses regarding the NSPS are provided in ''Hospital/ Medical/ Infectious Waste Incinerators: Background Information for Promulgated Standards and Guidelines—Summary of Public Comments and Responses'' (EPA–453/ R–97–006b).

1. Combined Dry/Wet Scrubbers

As discussed in the 1996 re-proposal, the MACT floor for medium and large HMIWI was based on emission limits achievable with good combustion and a dry injection/fabric filter (DI/FF) combined with a high efficiency wet scrubber (combined dry/wet system).

During the public comment period following the 1996 re-proposal, several commenters questioned the basis for the MACT floors for new medium and large HMIWI. The commenters contended that the revised MACT floor emission levels were based on invalid test data and invalid assumptions as to the applicability and technical feasibility of combination dry/wet scrubbing systems. The commenters stated that the combined dry/wet system is not proven technology. Some commenters stated that the pollutant-by-pollutant approach used to determine the MACT floor for new medium and large units resulted in a MACT floor that can not be accomplished with any type of economic feasibility. Other commenters stated that the costs of requiring a wet scrubber in addition to a dry scrubber far outweigh the air pollution control benefits.

The EPA recognizes that the pollutant-by-pollutant approach for determining the MACT floor can, as it does in this case, cause the overall cost of the regulation to increase. For example, the pollutant-by-pollutant approach for the HMIWI regulation results in a MACT floor for HCl based on a high efficiency wet scrubber, while the MACT floor for other pollutants reflects the performance of a dry scrubber. Compared to the dry scrubber alone, the addition of the wet scrubber adds considerable cost to the regulation while achieving a relatively small additional reduction in HCl. However, as mentioned later in this notice, a spray dryer/fabric filter system with carbon injection could be used instead of a combined dry/wet scrubber to achieve all of the emission limits at a lower cost than the combined system. On the other hand, EPA interprets section 129 of the CAA to require that the MACT floor be determined in this manner, and EPA believes that Congress did in fact intend that sources subject to regulations developed under section 129 meet emission limits that are achieved by the

best controlled unit for each pollutant as long as the control systems are compatible with each other. To EPA's knowledge, there is no technical reason why these two air pollution control systems cannot be combined (discussed later).

Section 129(a)(2) of the CAA specifies that ''the degree of reduction in emissions that is deemed achievable for new units in a category shall not be less stringent than the emissions control achieved in practice by the best controlled similar unit, as determined by the Administrator.'' This requirement identifies the least stringent emissions standards that the EPA may adopt for new HMIWI (i.e., the MACT floor).

At least one existing HMIWI in the medium subcategory is controlled with a high efficiency wet scrubber and another is equipped with a DI/FF system without carbon. The MACT floor for new medium HMIWI was based on both of these technologies (i.e., a combined dry/wet scrubber system) because the wet scrubber achieves the lowest dioxin, HCl, and Hg emissions, but the DI/FF without carbon injection achieves the lowest Pb and Cd emissions (note: as discussed elsewhere, the DI/FF system with carbon injection achieves the same or lower dioxin and Hg emissions as a wet scrubber). While no combined dry/wet scrubber systems were identified on medium HMIWI, these systems are currently in operation on large HMIWI. As discussed later, test data appear to indicate that combining the two systems is technically feasible. Similarly, the MACT floor for new large HMIWI was based on the emission levels that are achievable with good combustion and a combined dry/wet system with activated carbon.

The EPA does not agree that the MACT floors are to be based upon one overall unit. Rather, the EPA believes that section 129 supports its interpretation that it is legally permissible to set the MACT floor pollutant-by-pollutant, as long as the various MACT floors do not result in standards that are not achievable.

Section 129(a)(2) requires the EPA to establish technology based emission standards that ''reflect the maximum degree of reduction in emission of air pollutants listed under section (a)(4) that the Administrator, taking into consideration the cost of achieving such emission reduction and any nonair quality health and environmental impacts and energy requirements, determines is achievable . . .'' Congress further specified in section 129(a)(2) the minimum reduction that could satisfy this requirement (i.e., the MACT floor) for new sources as ''the emission control that is achieved in practice by the best controlled similar unit, as determined by the Administrator.'' This language does not expressly address whether the floor may be established pollutant-by-pollutant. The ''emission control achieved by the best controlled similar unit'' can be read either to mean emission control as to a particular pollutant, or emission control that is achieved by the unit as a whole. Nevertheless, the MACT floor reflects the least stringent emission standards that EPA may adopt in accordance with section 129(a)(2) regardless of costs.

Other statutory provisions are relevant, although they also do not decisively address this issue. Section 129(a)(4) requires MACT standards for, at a minimum, PM, opacity, SO_2, HCl, NO_X, CO, Pb, Cd, Hg, and dioxin/furan emitted by HMIWI. This provision certainly appears to direct maximum reduction of each specified pollutant. Moreover, although the provisions do not state whether there is to be a separate floor for each pollutant, the fact that Congress singled out these pollutants suggests that the floor level of control need not be limited by the performance of devices that only control some of these pollutants well.

A more detailed discussion of the legal basis for this pollutant-by-pollutant approach is contained in section 3.4.2 of ''Hospital/Medical/Infectious Waste Incinerators: Background Information for Promulgated Standards and Guidelines—Summary of Public Comments and Responses'' (EPA–453/R–97–006b). Quantitative information about the costs and air pollution control performance of both wet scrubbers and dry scrubbers is summarized in the 1996 re-proposal (61 FR 31743). As discussed in the 1996 re-proposal, detailed descriptions of costs and air pollution control performance of these systems are available in Docket A–91–61, items IV–B–30, IV–B–32, IV–B–48, and IV–B–49. See the **ADDRESSES** section of this preamble for the location and telephone number for the docket.

The EPA also notes that it followed this approach of setting the MACT floors and MACT standards pollutant-by-pollutant in the proposed MWC rules that were published on September 20, 1994 pursuant to section 129 and codified in 40 CFR part 60, Subparts Eb and Cb. Commenters on that rule also expressed concerns about the achievability of the resulting standards. The EPA notes that large MWC units (more than 250 tons/day capacity) are achieving the promulgated standards (in fact, several combined systems were in operation at the time of promulgation); thus, the approach of proposing MACT standards pollutant-by-pollutant did not lead to unachievable or economically infeasible standards in this case.

In response to commenters' concerns regarding the technical feasibility of combined dry/wet systems, a review of the available data documenting the performance of combined dry/wet scrubber systems was conducted. Although limited emissions data are available for HMIWI with combined dry/wet control systems, the available data indicate that the MACT floor emission levels for new HMIWI are achievable and technically feasible. The performance of dry scrubbers with activated carbon injection and the performance of wet scrubbers is well documented. The available data for combination dry/wet systems provide no indication of operational or emissions problems that occur as a result of combining dry and wet control systems. Finally, as mentioned in the 1996 re-proposal, one existing HMIWI equipped with a spray dryer/fabric filter system with carbon injection was tested during the EPA testing program, and this test demonstrated that this scrubbing technology could be used instead of a combined dry/wet scrubber to achieve all of the emission limits.

2. Siting Analysis

Section 129 of the CAA states that performance standards for new HMIWI must incorporate siting requirements that minimize, on a site-specific basis and to the maximum extent practicable, potential risks to public health or the environment. The Agency is directed by the CAA to promulgate siting requirements that meet the minimum criteria outlined in the CAA. In the 1995 proposal, the siting requirements were patterned after the Prevention of Significant Deterioration (PSD) requirements within the New Source Review (NSR) program. Additionally, the originally proposed siting requirements included provisions for a public meeting and the preparation of a comment/response document that would be made available to the public.

Following the 1996 re-proposal, commenters requested that EPA do away with the siting requirements because they will be costly and will impede the permitting process. Other commenters requested that EPA adopt siting requirements that are consistent with those that have been developed and enacted by most of the State environmental agencies. The commenters noted that States are equally concerned with minimizing potential risks to the environment, and that most have taken appropriate steps

in the development of their own siting criteria. The commenters indicated that requiring siting analyses in addition to those required by States and under the National Environmental Policy Act would be duplicative and would not enhance environmental protection. Other commenters supported the EPA's 1995 proposal to require an opportunity for public comments and a hearing on siting decisions.

In reviewing the 1995 proposed siting requirements and the comments received, the Agency is promulgating siting requirements as outlined in the CAA. The siting requirements promulgated today require the potential owner of an affected facility to prepare an analysis of the impacts of the affected facility. The analysis must consider air pollution control alternatives that minimize, on a site-specific basis, to the maximum extent practicable, potential risks to public health or the environment. In considering such alternatives, the analysis may consider costs, energy impacts, non-air environmental impacts, or any other factors related to the practicability of the alternatives. Analyses of facility impacts prepared to comply with State, local, or other Federal regulatory requirements may be used to satisfy the requirements of this section, as long as they include the consideration of air pollution control alternatives specified above. The owner or operator of the affected facility must complete and submit the siting requirements to EPA.

C. Selection of MACT

The EPA considered three regulatory options for adoption as the final standard for new HMIWI. These regulatory options are discussed in Appendix A of ''Hospital/Medical/Infectious Waste Incinerators: Background Information for Promulgated Standards and Guidelines—Summary of Public Comments and Responses'' (EPA–453/R–97–006b). As required by section 129(a)(2) of the CAA, the Administrator reviewed the emissions reductions achievable with each regulatory option and the cost, nonair quality environmental, and energy impacts of the regulatory options. Based on this review, the Administrator determined that the most cost-effective and achievable emission standards for promulgation are based on emission limits achievable with good combustion and a moderate efficiency wet scrubber for new small HMIWI, and good combustion and a combined dry/wet control system with carbon for new medium and large HMIWI. These final emissions standards reflect the MACT floor emission levels for new small and large HMIWI, but are more stringent than the MACT floor for new medium HMIWI.

The MACT floor for new small HMIWI was based on emission limits achievable through use of good combustion and a moderate efficiency wet scrubber. Consideration of the impact of this MACT floor indicates that few new small HMIWI are likely to be constructed due to the substantial increase in the cost of a new small HMIWI as a result of the moderate efficiency wet scrubber and the availability of alternative means of medical waste disposal.

One regulatory option more stringent than this MACT floor would reflect the use of good combustion and a high efficiency wet scrubber. Consideration of this option indicates that the nationwide impacts would be negligible, primarily because few new small HMIWI would be constructed (i.e., because of switching to alternative means of medical waste disposal). Where a typical new small HMIWI was constructed, however, the high efficiency wet scrubber would only reduce PM emissions by a small amount and would increase air pollution control costs by about 15 percent. As a result, the EPA established the MACT emission limitations for small new HMIWI based on the use of good combustion and a moderate efficiency wet scrubber (i.e., the MACT floor).

The MACT floor for new medium HMIWI was based on emission limits achievable through the use of good combustion and a combined dry/wet control system without activated carbon. On a national basis, because of switching to the use of alternative means of medical waste disposal, the addition of activated carbon to the combined dry/wet system results in negligible cost increase. For a typical new medium HMIWI, the addition of carbon would reduce emissions of dioxin significantly and would increase air pollution control costs by less than 4 percent. As a result, the EPA established the MACT emission limitations for new medium HMIWI based on good combustion and a combined dry/wet scrubber system with activated carbon.

The MACT floor for new large HMIWI was based on emission limits achievable through use of good combustion and a combined dry/wet scrubber with activated carbon. There is no air pollution control technology which could achieve lower emissions than this system. Consequently, EPA established the MACT emission limitations for new large HMIWI based on good combustion and a combined dry/wet scrubber system with activated carbon (i.e., the MACT floor).

D. Impacts of the Standards

There are a number of alternatives to onsite incineration of hospital waste and medical/infectious waste, including recycling or direct landfilling of non-infectious waste, and off-site commercial waste disposal or any of several waste disinfection technologies (e.g., steam autoclaving, microwave irradiation, macrowave irradiation, chemical treatment, thermal treatment, and biological treatment) for infectious waste. Many facilities that may have purchased an HMIWI in the absence of the HMIWI standards may find it more cost effective to dispose of their waste using one of these alternatives. As discussed in the June 1996 re-proposal, while further study is warranted, there appears to be no significant or substantial adverse economic, environmental, or health and safety issues associated with the increased use of the alternative waste treatment technologies.

In some cases, facilities that ''switch'' to alternative methods of waste disposal may further decrease their waste disposal costs by segregating their waste into infectious and noninfectious portions, and recycling or landfilling (rather than treating) their noninfectious waste. To account for facilities switching to alternative methods of waste disposal, the impacts of the standards were developed based on three compliance scenarios: no switching (scenario A), switching with waste segregation (scenario B), and switching without waste segregation (scenario C).

In the absence of the new standards, EPA projects that 85 new small HMIWI, 90 new medium HMIWI, 60 new large HMIWI, and 10 new commercial HMIWI would have been installed over the next five years. Scenario A preserves this assumption and estimates the costs of the additional control measures that would be required for these 245 new facilities to meet the standards at $36.2 million annually. The EPA believes that Scenario A is unrealistic and grossly overstates the national costs associated with the standards. Under Scenarios B and C, no new small or medium HMIWI are projected to be installed. Facilities that would have installed these units are assumed to find alternate methods of waste disposal. Under Scenario B, no new large HMIWI (other than commercial units) are projected to be installed either. The EPA believes that the total costs of the final standards for new sources in the fifth year after

implementation will fall somewhere between the $12.1 million/yr estimate for Scenario B and the $26.2 million/yr estimate for Scenario C.

Table 6 presents baseline emissions (i.e., emissions in the absence of the MACT emission standards) and the emissions that are expected to occur under the final MACT standard. A range of emissions is presented in Table 6 to account for the emissions that could occur under switching scenarios B and C as a result of the NSPS. Table 6 also presents the percent reduction in emissions achieved under the final MACT standard for new HMIWI.

TABLE 6.—BASELINE EMISSIONS, EMISSIONS IN THE FIFTH YEAR AFTER IMPLEMENTATION OF THE FINAL NSPS, AND EMISSIONS REDUCTION

[Metric Units]

Pollutant, units	Baseline	Emissions under the final NSPS	Emissions reduction, percent
PM, Mg/yr	28	2.1 to 4.1	85 to 92.
CO, Mg/yr	14	6.5 to 14	0 to 52.
CDD/CDF, g/yr	47	5.9 to 12	74 to 87.
TEQ CDD/CDF, g/yr	1.1	0.14 to 0.28	74 to 87.
HCl, Mg/yr	64	1.5 to 3.1	95 to 98.
SO_2, Mg/yr	28	14 to 28	0 to 52.
NO_X, Mg/yr	130	65 to 130	0 to 52.
Pb, Mg/yr	0.39	0.031 to 0.06	85 to 92.
Cd, Mg/yr	0.051	4.6×10^{-3} to 8.9×10^{-3}	83 to 91.
Hg, Mg/yr	0.21	0.056 to 0.12	45 to 74.

To convert Mg/yr to ton/yr, multiply by 1.1. To convert g/yr to lb/yr, divide by 453.6.

As discussed further in Appendix A of ''Hospital/Medical/Infectious Waste Incinerators: Background Information for Promulgated Standards and Guidelines—Summary of Public Comments and Responses'' (EPA–453/R–97–006b), the EPA is not able to calculate a monetized value for most of these emission reductions. However, using ''Benefit-Cost Analysis of Selected NSPS for Particulate Matter'' as a basis, EPA has calculated a monetized value for reductions in PM emissions using an estimate of $6,075 (1993 dollars) per ton of PM. This yields annualized benefits of PM reductions for the standards ranging from $157,300 to $170,000 (1993 dollars).

As a result of the MACT standards for new HMIWI, industries that generate hospital waste and/or medical/infectious waste (i.e., hospitals, nursing homes, etc.) are expected to experience average price increases in the range of 0.00 to 0.16 percent, depending on the industry. These industries are expected to experience output and employment impacts in the range of 0.00 to 0.21 percent. In addition, the revenue impacts for these industries are expected to range from an increase of 0.05 percent to a decrease of 0.05 percent as a result of the standards. For hospitals, 0.03 percent is estimated as the price increase necessary to recover annual control costs. The expected average price increase for each hospital patient-day is expected to be less than 35 cents. The average price impact for the commercial medical waste incinerator industry is approximately a 4.1 percent increase in price.

Facilities with onsite HMIWI that are currently uncontrolled may experience impacts ranging from 0.03 to 1.70 percent, depending on the industry. For many of these facilities, the economic impacts of switching to an alternative method of waste disposal are much lower than the economic impacts of choosing to install emission control equipment. The decision to switch to an alternative method of waste disposal should preclude facilities from experiencing a significant economic impact. The impacts that would be incurred by medical/infectious waste generators that currently use an offsite waste incineration service range from 0.00 to 0.02 percent and are considered negligible impacts.

The option of switching to an alternative method of waste disposal will be an attractive option for many facilities that are considering the purchase of a new HMIWI and should preclude facilities from experiencing a significant economic impact. However, two types of HMIWI operators may not be able to switch to an alternative: commercial HMIWI operators, because their line of business is commercial incineration; and onsite HMIWI that burn a small amount of waste and are located far away from an urban area, because they may not have access to other methods of waste disposal. However only a few, if any, of the projected 10 new commercial HMIWI over the next 5 years, and at the most, only a few of the projected 85 new small onsite HMIWI over the next 5 years are likely to be significantly impacted by the regulation (under all three regulatory options). A ''significant impact'' does not necessarily imply a facility closure or the need to cancel plans to open up or expand a facility. For example, operators of small, remote onsite HMIWI may still have switching opportunities. As the commercial incineration industry continues to grow (with additional impetus being provided by the EG and NSPS), it is possible that services will be extended to remote, isolated areas that are currently not served. Onsite autoclaving is another possible treatment alternative. If a facility had planned to invest in a new HMIWI, it stands to reason that an onsite alternative technology of comparable cost would be affordable.

The economic impact analysis examines possible economic impacts that may occur in industries that will be directly affected by this regulation. Therefore, the analysis includes an examination of industries that generate hospital waste or medical/infectious waste or dispose of such waste. Secondary impacts such as subsequent impacts on APCD vendors and HMIWI vendors are not estimated due to data limitations. Air pollution control device vendors are expected to experience an increase in demand for their products due to the regulation. This regulation is also expected to increase demand for commercial HMIWI services. However, due to economies of scale, this regulation is expected to shift demand from smaller incinerators to larger incinerators. Therefore, small HMIWI vendors potentially may be adversely affected by the regulation. Lack of data on the above effects prevent

quantification of the economic impacts on these secondary sectors.

No increase in the total national usage of natural gas for combustion controls is expected to result from the final HMIWI standards. The total national usage of electrical energy for the operation of add-on control devices as a result of the final MACT standards is expected to increase by less than 9,800 megawatt hours per year (MW-hr/yr) (33.4 billion British thermal units per year [10^9 Btu/yr]). As discussed in the 1996 re-proposal, compared to the amount of energy used by health care facilities such as hospitals (approximately 2,460 MMm^3/yr of natural gas and 23.2 million MW-hr/yr of electricity), the increase in energy usage that results from implementation of the HMIWI emission standards is insignificant.

Less than 43,600 Mg/yr (48,000 tons/yr) of additional solid waste is expected to result from the adoption of the final MACT standards. As discussed in the 1996 re-proposal, compared to municipal waste, which is disposed in landfills at an annual rate of over 91 million Mg/yr (100 million tons/yr), the increase in solid waste from the implementation of the final HMIWI standards is insignificant.

Less than 3.3 million gallons of additional wastewater would be generated in the fifth year by HMIWI as a result of the final NSPS. This amount is the equivalent of wastewater produced annually by one small hospital. Therefore, when considering the wastewater produced annually at health care facilities nationwide, the increase in wastewater resulting from the implementation of the MACT emission standards for new HMIWI is insignificant.

V. Emission Guidelines for Existing Sources

This section presents a summary of the final emission guidelines, including identification of the source category and pollutants being regulated, and presentation of the final emission limits and their associated performance testing, monitoring, recordkeeping and reporting requirements. This section discusses the most significant changes to the guidelines presented in the June 20, 1996 **Federal Register** document. Also discussed in this section is the rationale for the selection of MACT and a summary of the impacts of the final guidelines.

A. Summary of the Guidelines

The final guidelines (subpart Ce) apply to each existing HMIWI for which construction commenced on or before June 20, 1996. Hospital/medical/infectious waste incinerators for which construction commenced after June 20, 1996 or modification commenced after March 16, 1998 are not subject to the final subpart Ce guidelines; they are considered new sources and are subject to the standards under subpart Ec (see section IV of this document).

A HMIWI is defined as any device that combusts any amount of medical/infectious waste or hospital waste. The terms ''medical/ infectious waste'' and ''hospital waste'' are discussed in section III.A and defined in § 60.51c. An incinerator is not subject to subpart Ce during periods when only pathological, low-level radioactive, or chemotherapeutic waste (all defined in § 60.51c) is burned provided that the owner or operator keeps records of the periods of time when only pathological, low-level radioactive, or chemotherapeutic waste is burned. Any unit required to have a permit under section 3005 of the Solid Waste Disposal Act is exempt from subpart Ce as are incinerators subject to subpart Cb, Ea, or Eb. Existing incinerators, processing operations, or boilers that co-fire hospital waste and/or medical/infectious waste with other fuels or wastes and combust 10 percent or less medical/infectious waste and hospital waste by weight (on a calendar quarter basis) are not subject to the emission limitations but must keep records of the amounts of each fuel and waste burned.

The HMIWI source category is divided into three subcategories based on waste burning capacity: small (≤200 lb/hr), medium (>200 to 500 lb/hr), and large (>500 lb/hr). Waste burning capacity is determined either by the maximum design capacity or by the ''maximum charge rate'' established during the most recent performance test. In other words, a source may change its size designation by establishing a ''maximum charge rate'' lower than its design capacity. For example, a ''medium'' unit with a design capacity of 250 lb/hr may establish a maximum charge rate of 200 lb/hr and be considered a ''small'' unit for purposes of the emission guidelines. Separate emission guidelines apply to each subcategory of existing HMIWI. A summary of the final emission limits for existing HMIWI is presented in Table 7. In addition to the emission limits presented in Table 7, all HMIWI are subject to a 10 percent stack opacity limitation. Stack opacity will be determined using EPA Reference Method 9.

TABLE 7.—SUMMARY OF PROMULGATED EMISSION LIMITS FOR EXISTING HMIWI

Pollutant (test method)	Emission limits		
	Small HMIWI	Medium HMIWI	Large HMIWI
Particulate matter (EPA Method 5 or Method 29).	115 mg/dscm (0.05 gr/dscf)	69 mg/dscm (0.03 gr/dscf)	34 mg/dscm (0.015 gr/dscf).
Carbon monoxide (EPA Method 10 or Method 10B).	40 ppmv	40 ppmv	40 ppmv.
Dioxins/furans (EPA Method 23)	125 ng/dscm total CDD/CDF (55 gr/10^9 dscf) or 2.3 ng/dscm TEQ (1.0 gr/10^9 dscf).	125 ng/dscm total CDD/CDF (55 gr/10^9 dscf) or 2.3 ng/dscm TEQ (1.0 gr/10^9 dscf).	125 ng/dscm total CDD/CDF (55 gr/10^9 dscf). or 2.3 ng/dscm TEQ (1.0 gr/10^9 dscf).
Hydrogen chloride (EPA Method 26).	100 ppmv or 93% reduction	100 ppmv or 93% reduction	100 ppmv or 93% reduction
Sulfur dioxide (testing not required).	55 ppmv	55 ppmv	55 ppmv.
Nitrogen oxides (testing not required).	250 ppmv	250 ppmv	250 ppmv.
Lead (EPA Method 29)	1.2 mg/dscm (0.52 gr/10^3 dscf) or 70% reduction.	1.2 mg/dscm (0.52 gr/10^3 dscf) or 70% reduction.	1.2 mg/dscm (0.52 gr/10^3 dscf) or 70% reduction.
Cadmium (EPA Method 29)	0.16 mg/dscm (0.07 gr/10^3 dscf) or 65% reduction.	0.16 mg/dscm (0.07 gr/10^3 dscf) or 65% reduction.	0.16 mg/dscm (0.07 gr/10^3 dscf) or 65% reduction.

TABLE 7.—SUMMARY OF PROMULGATED EMISSION LIMITS FOR EXISTING HMIWI—Continued

Pollutant (test method)	Emission limits		
	Small HMIWI	Medium HMIWI	Large HMIWI
Mercury (EPA Method 29)	0.55 mg/dscm (0.24 gr/10^3 dscf) or 85% reduction.	0.55 mg/dscm (0.24 gr/10^3 dscf) or 85% reduction.	0.55 mg/dscm (0.24 gr/10^3 dscf) or 85% reduction.

The emission limits for small existing HMIWI presented in Table 7 are more stringent than the MACT floor emission limits for small existing HMIWI. However, the final HMIWI guidelines contain alternative emission limits which are based on the MACT floor for small existing HMIWI that meet certain ''rural criteria.'' The ''rural criteria'' stipulates that an HMIWI is allowed to meet alternative emission limits if it is located at least 50 miles from the nearest Standard Metropolitan Statistical Area (SMSA) boundary and burns no more than 2,000 pounds of hospital waste and medical/infectious waste per week. The SMSA is defined by the Office of Management and Budget (OMB). For purposes of these emission guidelines, the list of areas comprising each SMSA as of June 30, 1993 will be used to determine whether a small HMIWI meets the ''rural criteria.'' The list of areas comprising each SMSA is presented in OMB Bulletin No. 93–17 entitled ''Revised Statistical Definitions for Metropolitan Areas.'' This document may be obtained by contacting the National Technical Information Services, 5285 Port Royal Road, Springfield, Virginia 22161, or by calling (703) 487–4650 and requesting document No. PB 93–192–664. This document is available for public inspection and copying at EPA's Air and Radiation Docket and Information Center (Docket A–91–61, item IV–J–125). See the **ADDRESSES** section at the beginning of this preamble for the telephone number and location of the Docket. This document has been approved for incorporation by reference by the Director of the Federal Register in accordance with 5 U.S.C. 552(a) and 1 CFR part 51. The emission limits that correspond with these alternative guidelines for rural HMIWI are presented in Table 8. For further discussion of the ''rural criteria'' and rationale for the alternative emission limits for small existing HMIWI in rural areas, see section V.B ''Significant Issues and Changes'' (below).

TABLE 8.—SUMMARY OF ALTERNATIVE EMISSION LIMITS FOR SMALL EXISTING HMIWI THAT MEET THE RURAL CRITERIA

Pollutant (Performance test method)	Emission limits
Particulate matter (EPA Method 5)	197 mg/dscm (0.086 gr/dscf).
Carbon monoxide (EPA Method 10 of 10B)	40 ppmv.
Dioxins/furans (EPA Method 23)	800 ng/dscm total CDD/CDF (350 gr/10^9 dscf) or 15 ng/dscm TEQ (6.6 gr/10^9 dscf).
Hydrogen chloride (testing not required)	3,100 ppmv.
Sulfur dioxide (testing not required)	55 ppmv.
Nitrogen oxides (testing not required)	250 ppmv.
Lead (testing not required)	10 mg/dscm (4.4 gr/10^3 dscf).
Cadmium (testing not required)	4 mg/dscm (1.7 gr/10^3 dscf).
Mercury (EPA Method 29)	7.5 mg/dscm (3.3 gr/10^3 dscf).

Table 9 summarizes the additional requirements for existing HMIWI under the emission guidelines, including the operator training and qualification requirements, inspection requirements, compliance and performance testing requirements, monitoring requirements, and reporting and recordkeeping requirements. Table 10 summarizes the additional requirements under the emission guidelines for small existing HMIWI that meet the rural criteria. With the exception of the compliance and performance testing requirements and the inspection requirements, existing HMIWI that meet the small rural criteria are to comply with the same additional requirements as all other existing HMIWI. A summary of dates for compliance with the promulgated guidelines for existing HMIWI is presented in Table 11. These dates apply to all existing HMIWI.

TABLE 9.—SUMMARY OF ADDITIONAL REQUIREMENTS UNDER THE EMISSION GUIDELINES FOR EXISTING HMIWI

Additional requirements
Operator Training and Qualification Requirements: • Complete HMIWI operator training course. • Qualify operators. • Maintain information regarding HMIWI operating procedures and review annually.
Waste Management Plan: • Prepare a waste management plan that identifies the feasibility and approach to separate certain components of a health care waste stream.
Compliance and Performance Testing Requirements: • Conduct an initial performance test to determine compliance with the PM, CO, CDD/CDF, HCl, Pb, Cd, and Hg emission limits and opacity limit, and establish operating parameters. • Conduct annual performance tests to determine compliance with the PM, CO, and HCl emission limits and opacity limit. • Facilities may conduct performance tests for PM, CO, and HCl every third year if the previous three performance tests demonstrate that the facility is in compliance with the emission limits for PM, CO, and HCl.

TABLE 9.—SUMMARY OF ADDITIONAL REQUIREMENTS UNDER THE EMISSION GUIDELINES FOR EXISTING HMIWI—Continued

Additional requirements
Monitoring Requirements: • Install and maintain equipment to continuously monitor operating parameters including secondary chamber temperature, waste feed rate, bypass stack, and APCD operating parameters as appropriate. • Obtain monitoring data at all times during HMIWI operation. Reporting and Recordkeeping Requirements: • Maintain for 5 years records of results from the initial performance test and all subsequent performance tests, operating parameters, and operator training and qualification. • Submit the results of the initial performance test and all subsequent performance tests. • Submit reports on emission rates or operating parameters that have not been recorded or which exceeded applicable limits.

NOTE: This table depicts the major provisions of the emission guidelines and does not attempt to show all requirements. The regulatory text of Subpart Ce should be relied upon for a full and comprehensive statement of the requirements of the final guidelines.

TABLE 10.—SUMMARY OF ADDITIONAL REQUIREMENTS UNDER THE EMISSION GUIDELINES FOR EXISTING HMIWI THAT MEET THE RURAL CRITERIA

Additional requirements
Operator Training and Qualification Requirements: • Complete HMIWI operator training course. • Qualify operators. • Maintain information regarding HMIWI operating procedures and review annually. Inspection Requirements: • Provide for an annual equipment inspection of the designated facility. Waste Management Plan: • Prepare a waste management plan that identifies the feasibility and approach to separate certain components of a health care waste stream. Compliance and Performance Testing Requirements: • Conduct an initial performance test to determine compliance with the PM, CO, CDD/CDF, and Hg emission limits and opacity limit, and establish operating parameters. • Conduct annual tests to determine compliance with the opacity limit. Monitoring Requirements: • Install and maintain equipment to continuously monitor operating parameters including secondary chamber temperature, waste feed rate, bypass stack, and APCD operating parameters as appropriate. • Obtain monitoring data at all times during HMIWI operation. Reporting and Recordkeeping Requirements: • Maintain for 5 years records of results from the initial performance test and all subsequent performance tests, operating parameters, inspections, any maintenance, and operator training and qualification. • Submit the results of the initial performance test and all subsequent performance tests. • Submit reports on emission rates or operating parameters that have not been recorded or which exceeded applicable limits.

NOTE: This table depicts the major provisions of the emission guidelines and does not attempt to show all requirements. The regulatory text of Subpart Ce should be relied upon for a full and comprehensive statement of the requirements of the final guidelines.

TABLE 11.—COMPLIANCE TIMES UNDER THE EMISSION GUIDELINES FOR EXISTING HMIWI

Requirement	Compliance time
State Plan submittal	Within 1 year after promulgation of EPA emission guidelines.
Operator training and qualification requirements.	Within 1 year after EPA approval of State Plan.
Inspection requirements	Within 1 year after EPA approval of State Plan.
Initial compliance test	Within 1 year after EPA approval of State plan or up to 3 years after EPA approval of State plan if the source is granted an extension.
Repeat performance test	Within 12 months following initial compliance test and annually thereafter.
Parameter monitoring	Continuously, upon completion of initial compliance test.
Recordkeeping	Continuously, upon completion of initial compliance test.
Reporting	Annually, upon completion of initial compliance test; semiannually, if noncompliance.

B. Significant Issues and Changes

This section discusses the most significant changes to the guidelines made following the June 20, 1996 **Federal Register** document. Further discussion of these changes as well as other comments and responses regarding the emission guidelines are provided in ''Hospital/Medical/Infectious Waste Incinerators: Background Information for Promulgated Standards and Guidelines—Summary of Public Comments and Responses'' (EPA–453/R–97–006b).

As discussed in the 1996 re-proposal, the MACT floor for small existing HMIWI was based on emission limits achievable through use of good combustion alone (i.e., without add-on control). The EPA presented regulatory options more stringent than the MACT floor for small existing HMIWI in the 1996 re-proposal and stated that it had no inclination as to which regulatory

option might be selected for the final emission guidelines for small HMIWI. The EPA solicited public comment on the available regulatory options for the guidelines for small existing HMIWI.

During the public comment period, the EPA received several comments containing suggestions for the final emission guidelines for small existing HMIWI. A number of commenters requested that the emission guidelines for small existing HMIWI be based on the MACT floor. Other commenters requested that the guidelines for small HMIWI require small HMIWI in urban locations to meet emission guidelines more stringent than the MACT floor and allow small HMIWI in rural locations to meet the MACT floor emission limits. These commenters noted that cost-effective alternatives to onsite incineration may not be available to facilities operating small HMIWI in rural locations and that emission limits based on wet scrubbers would cause these facilities financial hardship. Other commenters contended that emission limits for small incinerators consistent with no more than good combustion would result in largely uncontrolled emissions, and would encourage medium-sized units to change their size designation to small by burning less waste per hour while operating more hours per day. These commenters stated that there are cost-effective alternatives to incineration and requested that small existing HMIWI be subject to emission limits consistent with wet scrubbers.

Guidelines for small existing HMIWI based on the use of good combustion and low efficiency wet scrubbing could cause the cost of waste disposal to more than double for facilities that install the equipment necessary to meet the emission guidelines. Even guidelines based on the MACT floor (good combustion alone) would cause a significant increase in costs for such facilities. The EPA's cost projections show that the costs of retrofitting small existing HMIWI to meet the MACT floor would be about $18 million annually, while the cost of going beyond the floor (guidelines based on low efficiency wet scrubbers) for the estimated 1,025 small HMIWI that do not meet the ''remote'' criteria (discussed later) would be an additional $47 million. However, as noted by commenters and observed by States that have implemented stringent HMIWI regulations, there are a number of cost-effective alternatives to onsite incineration for most facilities that operate small HMIWI. Therefore, many health care facilities operating small HMIWI could switch to alternative means of waste disposal if the emission guidelines are based on the use of good combustion and low efficiency wet scrubbing. In fact, EPA's modeling projects that most existing facilities, except those meeting the ''remote'' criteria, would find it more economical to switch to alternative means of waste disposal than to retrofit their small incinerators even to meet the MACT floor, and virtually all such facilities would switch rather than retrofit small incinerators with low efficiency wet scrubbers. Under the switching scenario, the costs for non-''remote'' small facilities range from $6 to $13 million for guidelines based on the MACT floor, and from $6 to $20 million for guidelines based on low efficiency wet scrubbers. In addition, by making the guidelines for small existing HMIWI only slightly less stringent than those for medium existing HMIWI (the guidelines for small existing HMIWI are based on good combustion and low efficiency wet scrubbers, while those for medium existing HMIWI are based on good combustion and moderate efficiency wet scrubbers), the selected option removes any strong incentive for medium existing facilities to reclassify themselves as small in order to escape more stringent guidelines. The result is that, under the selected option, most medium existing facilities will also switch to alternative means of waste disposal. Unlike the small facilities, most of these medium HMIWI would have found it economical to continue operating if they could have reclassified themselves as small and been required to meet emission limits based on good combustion alone. Thus, most of the emission reduction benefits from going beyond the MACT floor for small existing HMIWI actually come from these medium HMIWI that switch to alternative waste disposal rather than operating as small units subject to emission limits based on good combustion alone (the MACT floor). The additional costs to this group under the switching scenario of going beyond the floor range from $4 to $30 million annually.

While EPA's objective is to adopt MACT emission guidelines that fulfill the requirements of section 129 of the CAA, and not to cause the shutdown of most existing small and medium HMIWI, the EPA believes that the replacement of poorly controlled incinerators with cost effective alternatives that significantly reduce toxic emissions is an appropriate outcome. From a national perspective, guidelines for small existing HMIWI based on good combustion and low efficiency wet scrubbing (and the switching to alternative waste disposal options that EPA believes will result) will minimize emissions of PM, dioxin, acid gases, and metals from small and medium existing HMIWI at a relatively low cost due to the availability of alternative means of waste treatment. As a result, the final emission guidelines for small HMIWI are based on emission limits achievable through the use of good combustion and low efficiency wet scrubbers. These emission limits are more stringent than the MACT floor for small HMIWI.

As some commenters have pointed out, alternative means of medical waste treatment may not be available at a reasonable cost to some facilities that operate small HMIWI in rural or remote locations. Facilities that operate small HMIWI in remote locations could be faced with adverse impacts if required to meet emission limits associated with good combustion and low efficiency wet scrubbing. Therefore, the final emission guidelines subcategorize facilities for purposes of establishing MACT standards based on the location of the facility and the amount of waste burned. The EPA established MACT standards at the respective MACT floors for facilities that meet certain ''rural criteria;'' which are achievable through the use of good combustion alone. The EPA set MACT standards for all other small HMIWI more stringent than the MACT floors.

The basis for this subcategorization approach is found in section 129(a)(2), which states: ''The Administrator may distinguish among classes, types * * * and sizes of units within a category in establishing such standards.'' This language gives EPA broad discretion to distinguish among units in a category in establishing subcategories, including establishing subcategories based on a unit's location. See *Davis County Solid Waste Management & Energy Recovery Special Services District* v. *EPA*, 101 F.3d 1395, 1405 n.11 (D.C. Cir. 1996), *amended* 108 F.3d 1454 (D.C. Cir. 1997). As discussed above, the EPA believed it was appropriate to subcategorize for purposes of establishing MACT standards, where all MACT standards were at least as stringent as the respective MACT floors.

In the 1996 re-proposal, the EPA discussed the option of adopting emission guidelines with criteria for small existing HMIWI located in rural areas to meet requirements—on a case by case basis—based on the use of good combustion alone. The EPA solicited public comment on this option and on what criteria could be associated with this option to determine if a facility may be faced with cost impacts that warrant special consideration with regard to the emission guidelines.

Following the 1996 re-proposal, the EPA received several comments regarding possible ''rural criteria'' that may be used if the final guidelines allow rural HMIWI to meet less stringent emission limits. Some commenters suggested that rural criteria be based on distance from a SMSA or population density. Other commenters recommended a weekly limit on amount of waste burned in the small HMIWI and a requirement that no more than 10 percent of the waste burned in the small HMIWI is from an outside facility. Other commenters suggested that facilities operating small rural HMIWI should be required to demonstrate that no alternatives to onsite incineration are available at a reasonable cost. Finally, other commenters suggested considering ambient air quality, good engineering practice stack height, and risk analysis as part of the rural criteria.

The purpose of the rural criteria is to further define those facilities operating small HMIWI in remote areas that may have fewer cost-effective options for waste disposal; in which case, emission guidelines based on wet scrubbers could cause financial hardship. It is difficult to determine precisely which HMIWI have limited waste disposal options, and it is difficult to establish a universal set of criteria that could quantify ''hardship.'' All of the suggestions submitted by commenters with regard to the rural criteria for small HMIWI were considered. However, many of the suggestions would be very difficult to define or implement. Consequently, the rural criteria examined focused on (1) distance from a SMSA, and (2) amount of waste burned per week. The combination of small size, distance from an SMSA, and small amount of waste burned are the most likely indications that commercial services are not available for a reasonable cost.

Distance criteria ranging from 25 to 150 miles from an SMSA in conjunction with weekly waste burning limits ranging from 500 to 3,300 lb/wk were examined to determine the appropriate rural criteria. The final ''rural criteria'' selected for small existing HMIWI stipulates that: (1) The facility must be located at least 50 miles from the nearest SMSA boundary and (2) the HMIWI operated by the facility may not be used to burn more than 2,000 lb/wk. The 2,000 pound per week criterion was suggested by commenters; focuses the option for less stringent requirements on the smallest HMIWI; and reflects a sufficient quantity of waste to ensure that commercial services are available. The 50 mile criterion added to the 2,000 lb/wk criterion provides the less stringent requirements for less than 10 percent of small HMIWI (over 90 percent of small HMIWI would remain subject to guidelines based on wet scrubbers). It is very likely that commercial services are available within 50 miles of an SMSA, regardless of the amount of waste to be picked up.

Small units with good combustion alone are not left ''uncontrolled.'' Good combustion reduces emissions of PM, CO, and dioxin/furan, and these units remain subject to operator training requirements. Small HMIWI operating with good combustion alone are also required to reduce Hg emissions through pollution prevention. The guidelines also include requirements for routine inspection and maintenance to ensure good combustion. Based on EPA's assessment of costs and other impacts, these less stringent requirements will, themselves, raise the cost of incineration such that alternatives, if available, are likely to be less expensive. In other words, where alternatives are available, guidelines based on good combustion alone are likely to result in switching. Under the MACT guidelines, less than one percent of the waste burned in existing HMIWI will be burned in small rural HMIWI with good combustion controls alone. The final guidelines result in substantial reductions in emissions from the HMIWI source category as a whole. The promulgated emission guidelines for small HMIWI are consistent with section 129 because they reflect the maximum degree of reduction in emissions that can be achieved by small existing HMIWI while avoiding detrimental cost impacts to facilities operating small ''remote'' HMIWI.

C. Selection of MACT

The EPA considered six regulatory options for adoption as the final guidelines for existing HMIWI. These regulatory options are discussed in Appendix B of ''Hospital/Medical/Infectious Waste Incinerators: Background Information for Promulgated Standards and Guidelines—Summary of Public Comments and Responses'' (EPA–453/R–97–006b). As required by section 129(a)(2) of the CAA, the Administrator reviewed the emissions reductions achievable with each regulatory option and the cost, nonair quality environmental, and energy impacts of the regulatory options. Based on this review, the Administrator determined that the most cost effective and achievable emission guidelines for promulgation are based on emission levels achievable with good combustion and a low efficiency wet scrubber for most small existing HMIWI; good combustion and a moderate efficiency wet scrubber for medium existing HMIWI; and good combustion and a high efficiency wet scrubber for large existing HMIWI. The promulgated emission guidelines allow small HMIWI that meet certain ''rural criteria'' to meet emission limits achievable with good combustion alone.

The EPA concluded that MACT for most small units should reflect emission limits achievable with good combustion and a low efficiency wet scrubber because the reductions in emissions are substantial, while the cost and economic impacts for most small HMIWI appear minimal. Compared to emission limits achievable with good combustion and low efficiency wet scrubbers, emission limits based on the use of good combustion and moderate or high efficiency wet scrubbers would increase the capital control costs for facilities operating small HMIWI by 15 to 42 percent and would only slightly decrease the emissions of PM from small HMIWI. As a result, good combustion and moderate or high efficiency wet scrubbers were not further considered in the selection of MACT for small HMIWI.

The MACT floor for medium existing HMIWI appears to require the use of good combustion and a moderate efficiency wet scrubber. One regulatory option more stringent than this MACT floor would reflect the use of good combustion and a high efficiency wet scrubber. On a nationwide basis, while this more stringent option would result in a relatively small cost increase, it would also result in only a small decrease in PM emissions. For a typical facility operating a medium HMIWI that installed or upgraded an existing wet scrubber to a high efficiency wet scrubber, air pollution control costs would increase by about 15 to 25 percent. As a result, EPA concluded that the MACT emission limitations for medium existing HMIWI based on the use of good combustion and a moderate efficiency wet scrubber (i.e., the MACT floor) are the most cost effective and achievable. These emission limitations could also be achieved using a dry scrubber with activated carbon.

The MACT floor for large existing HMIWI appears to require the use of good combustion and a high efficiency wet scrubber. Regulatory options more stringent than this MACT floor were not considered for large HMIWI for the reasons discussed below. As a result, EPA concluded that MACT emission limitations for large existing HMIWI based on the use of good combustion and a high efficiency wet scrubber (i.e., the MACT floor) are the most cost

effective and achievable. These emission limitations could also be achieved using a dry scrubber with activated carbon.

The MACT emission limitations for medium and large existing HMIWI were structured so that either a dry scrubber or a wet scrubber could be used to achieve the emission limits. The emission limitations were not based on the use of dry scrubbers exclusively or wet scrubbers exclusively because a dry scrubber typically costs much more than a wet scrubber, and a dry scrubber with activated carbon would result in only a very small additional reduction in dioxin, Pb, and Cd emissions. Furthermore, for existing HMIWI already equipped with wet scrubbers, replacing a wet scrubber with a dry scrubber would be extremely expensive. Similarly, for existing HMIWI already equipped with dry scrubbers, replacing the dry scrubber with a wet scrubber would be extremely expensive. Guidelines based on the use of combined dry/wet scrubbing systems were not considered for medium and large existing HMIWI because such control systems are very expensive and result in only small additional reductions in emissions.

D. Impacts of the Guidelines

There are a number of alternatives to onsite incineration of hospital waste and medical/infectious waste, including recycling or direct landfilling of non-infectious waste, and off-site commercial waste disposal or any of several waste disinfection technologies (e.g., steam autoclaving, microwave irradiation, macrowave irradiation, chemical treatment, thermal treatment, and biological treatment) for infectious waste. Many facilities that currently operate onsite HMIWI may find it more cost effective to dispose of their waste using one of these alternatives. As discussed in the June 1996 re-proposal, while further study is warranted, there appears to be no significant or substantial adverse economic, environmental, or health and safety issues associated with the increased use of the alternative waste treatment technologies.

In some cases, facilities that ''switch'' to alternative methods of waste disposal may further decrease their waste disposal costs by segregating their waste into infectious and noninfectious portions, and recycling or landfilling (rather than treating) their noninfectious waste. To account for facilities switching to alternative methods of waste disposal, the impacts of the guidelines were developed based on three compliance scenarios: no switching (scenario A), switching with waste segregation (scenario B), and switching without waste segregation (scenario C).

The EPA estimates that there are approximately 1,139 existing small HMIWI, 692 existing medium HMIWI, 463 existing large HMIWI, and 79 existing commercial HMIWI in operation today. Scenario A preserves this assumption and estimates the costs of the additional control measures that would be required for these 2,373 existing facilities to meet the guidelines at $172 million annually. The EPA believes that Scenario A is unrealistic and grossly overstates the national costs associated with the guidelines. Under Scenarios B and C, 93 to 100 percent of existing small ''non-remote'' HMIWI, 60 to 95 percent of existing medium HMIWI, and as many as 35 percent of existing large HMIWI are expected to cease operation. All 79 commercial units and 114 small units meeting the ''remote'' criteria are assumed to remain in operation. Facilities that cease operation are assumed to find alternate methods of waste disposal. The EPA believes that the total costs of the final guidelines for existing sources will fall somewhere between the $59 million/yr estimate for Scenario B and the $120 million/yr estimate for Scenario C.

Table 12 presents baseline emissions (i.e., emissions in the absence of the MACT emission guidelines) and the range of emissions that are expected to occur under the final MACT guidelines. A range of emissions is presented in Table 12 to account for the emissions that could occur under switching scenarios B and C as a result of the guidelines. Table 12 also presents the percent reduction in emissions achieved under the final MACT guidelines for existing HMIWI.

TABLE 12.—BASELINE EMISSIONS, EMISSIONS AFTER IMPLEMENTATION OF THE FINAL EMISSION GUIDELINES, AND EMISSIONS REDUCTION

[Metric Units]

Pollutant, units	Baseline	Emissions under the final emission guidelines	Emissions reduction, percent
PM, Mg/yr	940	72 to 120	88 to 92.
CO, Mg/yr	460	82 to 120	75 to 82.
CDD/CDF, g/yr	7,200	210 to 310	96 to 97.
TEQ CDD/CDF, g/yr	150	5 to 7	95 to 97.
HCl, Mg/yr	5,700	130 to 140	98.
SO_2, Mg/yr	250	170 to 250	0 to 30.
NO_X, Mg/yr	1,200	810 to 1,200	0 to 30.
Pb, Mg/yr	11	1.4 to 2.2	80 to 87.
Cd, Mg/yr	1.2	0.19 to 0.30	75 to 84.
Hg, Mg/yr	15	0.8 to 1.1	93 to 95.

To convert Mg/yr to ton/yr, multiply by 1.1. To convert g/yr to lb/yr, divide by 453.6.

As discussed further in Appendix B of ''Hospital/Medical/Infectious Waste Incinerators: Background Information for Promulgated Standards and Guidelines—Summary of Public Comments and Responses'' (EPA–453/R–97–006b), the EPA is not able to calculate a monetized value for most of these emission reductions. However, using ''Benefit-Cost Analysis of Selected NSPS for Particulate Matter'' as a basis, EPA has calculated a monetized value for reductions in PM emissions using an estimate of $6,075 (1993 dollars) per ton of PM. This yields annualized benefits of PM reductions for the guidelines ranging from $5.5 million to $5.8 million (1993 dollars).

As a result of the MACT guidelines for existing HMIWI, industries that generate hospital waste and/or medical/infectious waste (i.e., hospitals, nursing homes, etc.) are expected to experience average price increases in the range of 0.00 to 0.14 percent, depending on the

industry. These industries are expected to experience output and employment impacts in the range of 0.00 to 0.18 percent. In addition, the revenue impacts for these industries are expected to range from an increase of 0.05 percent to a decrease of 0.04 percent as a result of the guidelines. For hospitals, 0.03 percent is the estimated price increase necessary to recover annual control costs. The expected average price increase for each hospital patient-day is expected to be less than 30 cents. The average price impact for the commercial HMIWI industry is approximately a 2.6 percent increase in price.

Facilities with onsite HMIWI that are currently uncontrolled may experience impacts ranging from 0.03 to 1.83 percent, depending on the industry. For many of these facilities, the economic impacts of switching to an alternative method of waste disposal are much lower than the economic impacts of choosing to install emission control equipment. The decision to switch to an alternative method of waste disposal should preclude any facilities from experiencing a significant economic impact. The impacts that would be incurred by medical/infectious waste generators that currently use an offsite waste incineration service range from 0.00 to 0.02 percent and are considered negligible impacts.

The option of switching to an alternative method of waste disposal will be an attractive option for many facilities that currently operate onsite HMIWI and should preclude most facilities from experiencing a significant economic impact. However, two types of HMIWI operators may not be able to switch to an alternative: commercial HMIWI operators, because their line of business is commercial incineration; and small, rural, remote HMIWI, which may not have access to alternative waste disposal methods. For commercial HMIWI operators, only three of the 59 facilities operating the 79 commercial HMIWI in the HMIWI inventory were found to be significantly impacted by the regulation. As discussed in ''Hospital/Medical/Infectious Waste Incinerators: Background Information for Promulgated Standards and Guidelines—Analysis of Economic Impacts for Existing Sources'' (EPA–453/R–97–007b), commercial HMIWI are considered to be significantly impacted if the price impact (i.e., the price increase that would be necessary to recover compliance costs) on an individual facility exceeds the market price increase (2.62 percent) by more than 2 percentage points (i.e., above 4.6 percent). Price increases at these three facilities are calculated as 9.58 percent, 11.13 percent, and 18.36 percent. These facilities may not have to raise their prices this much to remain profitable, since they are completely uncontrolled in the baseline and therefore may currently enjoy a cost advantage over their competitors (most of which are at least partially controlled in the baseline). Also, demand may increase as a result of switching away from onsite incineration. In this latter case, increased revenues (which could offset control costs) may result in one of two ways: either by allowing a larger increase in price, or by providing an increase in the amount of waste coming to the facility (i.e., increased capacity utilization). Impacts are not significant for small, rural, remote HMIWI operators because the final guidelines allow good combustion alone where alternatives to onsite incineration might be unavailable.

The economic impact analysis examines possible economic impacts that may occur in industries that will be directly affected by this regulation. Therefore, the analysis includes an examination of industries that generate hospital waste or medical/infectious waste or dispose of such waste. Secondary impacts such as subsequent impacts on air pollution device vendors and HMIWI vendors are not estimated due to data limitations. Air pollution control device vendors are expected to experience an increase in demand for their products due to the regulation. This regulation is also expected to increase demand for commercial HMIWI services. However, due to economies of scale, this regulation is expected to shift demand from smaller incinerators to larger incinerators. Therefore, small HMIWI vendors potentially may be adversely affected by the regulation. Lack of data on the above effects prevent quantification of the economic impacts on these secondary sectors.

The total national usage of natural gas for HMIWI combustion controls is expected to increase by less than 16.6 million cubic meters per year (MMm^3/yr) (586 million cubic feet per year [10^6 ft^3/yr]). The total national usage of electrical energy for the operation of add-on control devices as a result of the final MACT guidelines is expected to increase by less than 259,000 megawatt hours per year (MW-hr/yr) (883 billion British thermal units per year [10^9 Btu/yr]). As discussed in the 1996 re-proposal, compared to the amount of energy used by health care facilities such as hospitals (approximately 2,460 MMm^3/yr of natural gas and 23.2 million MW-hr/yr of electricity) the increase in energy usage that results from implementation of the HMIWI emission guidelines is insignificant.

Less than 211,000 Mg/yr (233,000 tons/yr) of additional solid waste is expected to result from the adoption of the final MACT guidelines. As discussed in the 1996 re-proposal, compared to municipal waste, which is disposed in landfills at an annual rate of over 91 million Mg/yr (100 million tons/yr), the increase in solid waste from the implementation of the final HMIWI guidelines is insignificant.

Less than 198 million gallons of additional wastewater would be generated by HMIWI as a result of the final emission guidelines. This amount is the equivalent of wastewater produced annually by four large hospitals. Therefore, when considering the wastewater produced annually at health care facilities nationwide, the increase in wastewater resulting from the implementation of the MACT emission guidelines for existing HMIWI is insignificant.

VI. Administrative Requirements

This section addresses the following administrative requirements: Docket, Paperwork Reduction Act, Executive Orders 12866 and 12875, Unfunded Mandates Reform Act, Regulatory Flexibility Act, Small Business Regulatory Enforcement Fairness Act, and Clean Air Act Procedural Requirements.

A. Docket

The docket is an organized and complete file of all the information considered in the development of this rulemaking. The principal purposes of the docket are: (1) To allow interested parties to identify and locate documents so that they can effectively participate in the rulemaking process; and (2) to serve as the record in case of judicial review, except for interagency review material. The docket number for this rulemaking is A–91–61. Information on how to obtain documents from the docket was provided in the **ADDRESSES** section at the beginning of this preamble.

B. Paperwork Reduction Act

The information collection requirements in this rule have been submitted for approval to OMB under the Paperwork Reduction Act. An Information Collection Request (ICR) document has been prepared by EPA (ICR No. 1730.02) and a copy may be obtained from Sandy Farmer, OPPE Regulatory Information Division; U. S. Environmental Protection Agency (2136); 401 M St., S.W.; Washington, DC 20460 or by calling (202) 260–2740.

This ICR document is also available electronically via the Internet. See the **SUPPLEMENTARY INFORMATION** section of this preamble for information on accessing this document via the Internet.

The information required to be collected by this rule is necessary to identify the regulated entities who are subject to the rule and to ensure their compliance with the rule. The recordkeeping and reporting requirements are mandatory and are being established under authority of sections 114 and 129(c) of the CAA. All information submitted as part of a report to the Agency for which a claim of confidentiality is made will be safeguarded according to the Agency policies set forth in Title 40, Chapter 1, part 2, subpart B—Confidentiality of Business Information (see 40 CFR Part 2; 41 FR 36902, September 1, 1976, amended by 43 FR 39999, September 28, 1978; 43 FR 42251, September 28, 1978; 44 FR 17674, March 23, 1979).

The Agency predicts that somewhere between 2 and 14 new HMIWI will be constructed each year after implementation of the NSPS. The total annual reporting and recordkeeping burden summarized in the ICR document for this collection averaged over the first 3 years of the NSPS application to new HMIWI is estimated to be about 14,106 person hours per year if 14 new HMIWI are constructed each year. This burden estimate includes the time needed to review instructions, search existing data sources, gather and maintain the data needed, and complete and review the collection of information. Efforts were made to reduce the burden on facilities installing new HMIWI by allowing them to: (1) Monitor operating parameters rather than continuously monitor emissions using CEMS; (2) test emissions once every 3 years instead of annually if they demonstrate that they consistently meet the emissions requirements; (3) retest emissions of PM, CO, and HCl rather than emissions of all pollutants; and (4) submit reports semiannually (or annually if no exceedances occur) rather than quarterly as was originally proposed.

Comments on the ICR document are requested, including the Agency's need for the information presented in this ICR document, the accuracy of the provided burden estimates, and any suggested methods for minimizing respondent burden. Send comments on the ICR to the Director, OPE Regulatory Information Division; U. S. Environmental Protection Agency (2136); 401 M St. S.W.; Washington, DC 20460; and to the Office of Information and Regulatory Affairs, Office of Management and Budget, 725 17th St. N.W.; Washington, DC 20503; marked ''Attention: Desk Officer for EPA.'' Include the ICR number in any correspondence. Since the OMB is required to make a decision concerning the ICR between 30 and 60 days after today's request for comment, a comment to OMB is best assured of having its full effect if OMB receives it by October 15, 1997. The EPA will publish a response to OMB and public comments on the information collection requirements contained in this document in a subsequent **Federal Register** document.

C. Executive Order 12866

Under Executive Order 12866 (58 FR 51735, October 4, 1993), the EPA must determine whether a regulatory action is ''significant,'' and therefore, subject to OMB review and the requirements of the Executive Order. The Order defines ''significant'' regulatory action as one that is likely to lead to a rule that may:

1. Have an annual effect on the economy of $100 million or more, or adversely affect in a material way the economy, a sector of the economy, productivity, competition, jobs, the environment, public health or safety, or State, local or Tribal governments or communities;

2. Create a serious inconsistency or otherwise interfere with an action taken or planned by another agency;

3. Materially alter the budgetary impact of entitlements, grants, user fees, or loan programs or the rights and obligations of recipients thereof; or

4. Raise novel legal or policy issues arising out of legal mandates, the President's priorities, or the principles set forth in the Executive Order.

Pursuant to the terms of Executive Order 12866, the EPA considers these promulgated standards and guidelines to be ''significant.'' As such, this action was submitted to OMB for review. Changes made in response to OMB suggestions or recommendations are documented in the public docket for this rulemaking.

Also, in accordance with the provisions of the Executive Order regarding ''significant regulatory actions,'' EPA has prepared assessments of the costs and benefits of the rule and of ''potentially effective and reasonably feasible alternatives.'' These assessments are contained in four documents: ''Hospital/Medical/Infectious Waste Incinerators: Background Information for Promulgated Standards and Guidelines—Analysis of Economic Impacts for Existing Sources'' (EPA–453/R–97–007b), ''Hospital/Medical/Infectious Waste Incinerators: Background Information for Promulgated Standards and Guidelines—Analysis of Economic Impacts for New Sources'' (EPA–453/R–97–008b), ''Hospital/Medical/Infectious Waste Incinerators: Background Information for Promulgated Standards and Guidelines—Regulatory Impact Analysis for New and Existing Sources'' (EPA–453/R–07-009b), and Appendices A and B of ''Hospital/Medical/Infectious Waste Incinerators: Background Information for Promulgated Standards and Guidelines—Summary of Public Comments and Responses'' (EPA–453/R–970–006b). The selected options for both the New Source Performance Standards and the Emissions Guidelines are identified as regulatory option 2 in these documents. Several other options, both more and less stringent than the selections options, are also analyzed. A summary of these analyses is included below in Section VI.D.2 of this preamble.

D. Unfunded Mandates Reform Act

Under section 202 of the Unfunded Mandates Reform Act of 1995 (''Unfunded Mandates Act''), signed into law on March 22, 1995, the EPA must prepare a statement to accompany any rule where the estimated costs to State, local, or Tribal governments, or to the private sector, will be $100 million or more in any 1 year. Section 203 requires the EPA to establish a plan for informing and advising any small governments that may be significantly impacted by the rule. Under section 205(a), the EPA must select the ''least costly, most cost-effective or least burdensome alternative that achieves the objectives of the rule'' and is consistent with statutory requirements. The EPA has complied with section 205 of the Unfunded Mandates Act, by promulgating a rule that is the most cost-effective alternative for regulation of these sources that meets the statutory requirements under the Clean Air Act.

The unfunded mandates statement under section 202 must include: (1) A citation of the statutory authority under which the rule is proposed, (2) an assessment of the costs and benefits of the rule including the effect of the mandate on health, safety and the environment, and the Federal resources available to defray the costs, (3) where feasible, estimates of future compliance costs and disproportionate impacts upon particular geographic or social segments of the nation or industry, (4) where relevant, an estimate of the effect on the national economy, and (5) a description of the EPA's consultation with State, local, and Tribal officials.

Since this rule is estimated to impose costs to the private sector and government entities in excess of $100 million per year, it is considered a significant regulatory action. Therefore, EPA has prepared the following statement with respect to Sections 202 through 205 of the Unfunded Mandates Act.

1. Statutory Authority

This rule establishes emission guidelines for existing HMIWI and standards of performance for new HMIWI pursuant to sections 111 and 129 of the CAA. Section 129(a)(2) requires the Administrator to promulgate standards for new solid waste incinerator units and emission guidelines for existing units that ''reflect the maximum degree of reduction in emissions of air pollutants listed under section (a)(4) that the Administrator, taking into consideration the cost of achieving such emission reduction, and any non-air quality health and environmental impacts and energy requirements, determines is achievable for new or existing units in each category. The Administrator may distinguish among classes, types, and sizes of units within a category in establishing such standards . . .'' This is commonly referred to as maximum achievable control technology, or MACT. Section 129(a)(2) further defines a minimum level of stringency that can be considered for MACT standards—commonly referred to as the MACT floor—which for new units, is the level of control achieved by the best controlled similar unit, and for existing units, is the level of control achieved by the average of the best performing 12 percent of units in the category.

Control technologies and their performance are discussed in the June 1996 re-proposal (61 FR 31736, June 20, 1996). For the promulgated standards and guidelines, EPA divided the HMIWI population into three size categories which reflect technical differences in HMIWI design: small (≤200 lb/hr), medium (>200 to ≤500 lb/hr), and large (>500 lb/hr). The EPA considered emission reduction, costs, and energy impacts, as required by the statutory language of section 111 of the CAA, in selecting the promulgated MACT standards and guidelines. The promulgated standards and guidelines achieve a significant reduction in HMIWI emissions as outlined in sections IV.D and V.D and in section 2 ''Social Costs and Benefits'' (below). The cost impacts of the standards and guidelines are presented in section 2 ''Social Costs and Benefits'' (below). Consultations with the public entities and affected industries as required by the Unfunded Mandates Act are described in section 4, ''Consultation with Government Officials'' (below). The energy impacts are discussed in sections IV.D and V.D of this notice. Regarding EPA's compliance with section 205(a), the EPA considered a reasonable number of alternatives which are discussed in section 2.b, ''Regulatory Alternatives Considered'' (below).

2. Social Costs and Benefits

This assessment of the costs and benefits to State, local, and Tribal governments of the NSPS and guidelines is based on the regulatory impact analysis (EPA–453/R–97–009b). Measuring the social costs of the rule requires identification of the affected entities by ownership (public or private), consideration of regulatory alternatives, calculation of the regulatory compliance costs for each affected entity, and assessment of the market implications of the additional pollution control costs. Calculating the social benefits of the NSPS and guidelines requires estimating the anticipated reductions in emissions at HMIWI due to regulation, identification of the harmful effects of exposure to HMIWI emissions, and valuing the expected reductions in these damages to society.

a. *Affected Entities.* Approximately 2,400 HMIWI are estimated to be in operation in this country, and this inventory estimate was used to estimate the cost of the EG to affected entities. While the inventory distinguishes the size of HMIWI and indicates whether the HMIWI are located at commercial waste disposal facilities, other information is not precisely known such as the types of entities (hospitals, laboratories, nursing homes, and other) and ownership characteristics (public versus private) of entities operating onsite HMIWI. However, the majority of directly affected entities are not likely to be owned or operated by State, local, or Tribal governments. This statement is based upon the ownership characteristics of these industries rather than the ownership characteristics of the portion of these industries operating HMIWI. Approximately 26.5 percent of the 6,500 hospitals operating in this country are designated to have affiliations with State and local governments. The remaining 73.5 percent have private ownership; are designated nongovernment, not-for-profit; or have Federal government affiliations. Nearly 20,900 nursing homes and 4,200 commercial research labs operate in the United States. Of these nursing homes and research labs, approximately 28.4 and 8.2 percent, respectively are tax exempt and may have government affiliations or be nonprofit organizations. Finally, 59 commercial HMIWI operate in this country, and these facilities are predominately privately owned. Since the number of HMIWI operating is only a fraction of the total number of hospitals, laboratories, nursing homes, and other entities in existence in this country, only a fraction of these entities will be directly impacted by the HMIWI regulations. Other firms generating hospital, medical, and infectious waste and sending the waste offsite for disposal will be indirectly affected by the regulation to the extent waste disposal fees increase. The above affected entity information is equally relevant to the NSPS since no additional information is known about the types of entities or ownership characteristics expected for new HMIWI.

b. *Regulatory Alternatives Considered.* Under section 205 of the Unfunded Mandates Act, the EPA must identify and consider a reasonable number of regulatory options before promulgating a rule for which a budgetary impact statement must be prepared. The Agency must select from those alternatives the least costly, most cost-effective, or least burdensome alternative that achieves the objectives of the rule, unless the EPA explains why this alternative is not selected or the selection of this alternative is inconsistent with the law.

The two broad categories of regulatory standards available include design standards and emission standards. Design standards specify the type of control equipment polluters must install, whereas emission standards specify the maximum quantity of a given pollutant that any one polluter may release.

Design standards offer the least flexible approach considered in this analysis. Owners of HMIWI would have to install the specified control equipment regardless of the additional emission reductions achieved or the relative cost of alternative means of emission reductions.

Emission standards allow greater flexibility in the methods used to reduce emissions. Owners of HMIWI are free to meet the emission limit in the manner that is least costly to them. Consequently, for a given level of emission reductions, emission standards are generally less costly than design standards. Furthermore, emission standards give owners of HMIWI an incentive to develop more effective means of controlling emissions. In addition, the CAA requires the

Administrator to promulgate emission standards unless such standards are not feasible. Since emission standards for HMIWI are feasible, the EPA is barred from promulgating design standards for HMIWI.

Even though emission standards generally result in a more efficient allocation of costs than design standards, uniform emission standards can be more costly than necessary. Uniform emission standards require the same level of emission control of every discharger. Because marginal control costs differ for plants of different sizes, different technologies, different levels of product recovery (i.e., in the chemical industry), and different levels of baseline control, an effective solution can be reached if standards are carefully tailored to the special characteristics of each discharger. This type of standard is referred to as a differentiated standard.

In formulating the regulatory options for HMIWI, EPA divided the HMIWI population into three size categories: small (≤200 lb/hr), medium (>200 to ≤500 lb/hr), and large (>500 lb/hr). A number of regulatory options were considered for each size classification. The regulatory options for the three selected size classifications did not specify a particular control technology; rather, they specified emission limits that facilities would be required to meet.

A detailed discussion of the regulatory options considered for the final standards and guidelines is presented in Appendices A and B of ''Hospital/Medical/Infectious Waste Incinerators: Background Information for Promulgated Standards and Guidelines—Summary of Public Comments and Responses'' (EPA–453/R–97–006b). For the most part, the final standards and guidelines reflect the MACT floor, the least stringent regulatory option EPA may adopt for the final rule. In two cases (medium new units and small existing units), MACT was selected at a level more stringent than the MACT floor. A description of EPA's decision regarding medium new units is presented in section IV.C of this notice, and a description of EPA's decision regarding small existing units is presented in sections V.B and V.C of this notice. The EPA believes that the final standards and guidelines reflect the least costly, most cost-effective, and least burdensome regulatory option that achieves the objectives of the rule.

c. *Social Cost and Benefits.* The regulatory impact analysis, including the Agency's assessment of costs and environmental benefits, is detailed in the ''Medical Waste Incinerators—Background Information for Proposed Standards and Guidelines: Regulatory Impact Analysis for New and Existing Facilities,'' (EPA 453/R–94–063a). The regulatory impact assessment document has been updated for the final rule and is entitled ''Hospital/Medical/Infectious Waste Incinerators: Background Information for Promulgated Standards and Guidelines—Regulatory Impact Analysis for New and Existing Facilities'' (EPA–453/R–97–009b). Estimates of the costs and benefits of the various regulatory options considered are discussed in the revised regulatory impact analysis document and in Appendices A and B of ''Hospital/Medical/Infectious Waste Incinerators: Background Information for Promulgated Standards and Guidelines—Summary of Public Comments and Responses'' (EPA–453/R–97–006b). Quantitative estimates of the costs, impacts, and benefits associated with the final NSPS and EG are presented in sections IV.D and V.D of this notice. These estimates are summarized below.

Total costs for the selected options are estimated to range from $71 million per year under Scenario B, which assumes switching and substantial additional waste segregations, to $146 million per year under Scenario C, which assumes switching but little opportunity for additional waste segregations. As a point of reference, EPA also calculated the costs under Scenario A, in which all existing HMIWI install retrofit technology and all new HMIWI projected to be built over the next 5 years install control technology to comply with the guidelines and standards. Under Scenario A, the total costs are estimated to be $210 million per year. The EPA does not believe Scenario A represents a realistic outcome, given the availability of alternative waste disposal options that would be cheaper than installing control technology for many facilities. Thus, EPA believes the actual costs will fall within the range estimated for Scenarios B and C.

Implementation of the NSPS and EG for HMIWI is expected to reduce emissions of HAP, dioxin/furan, and criteria air pollutants. Reduction in a variety of HAP including Cd, HCl, Pb, and Hg is expected as a result of the regulation. Dioxin/furan emissions are also expected to be reduced. In addition, decreases in the following criteria air pollutants are anticipated: PM, SO_2, CO, and NO_X. Table 6 in section IV.D gives a quantitative estimate of the emissions reductions expected from the NSPS, and Table 12 in section V.D gives a quantitative estimate of the emissions reductions expected from the EG. Air quality benefits resulting from the air quality improvements resulting from this regulation include a reduction in adverse health effects associated with inhalation of the above pollutants as well as improved welfare effects such as improved visibility and crop yields.

While the Agency believes that the health and environmental benefits of this rule are quite significant, the EPA is not currently able to quantitatively evaluate all human and environmental benefits associated with the rule's air quality improvements, and is even more limited in its ability to assign monetary values to these benefit categories. Categories that are not evaluated include several health and welfare endpoints (categories), as well as entire pollutant categories. Consequently, the discussion of benefits included in the Regulatory Impact Analysis and summarized here is primarily qualitative.

However, monetized benefits were calculated for PM emissions reductions. These benefits were estimated using a valuation of $6075/ton, based on analyses of PM emissions reductions benefits from other rules that are discussed in the EPA document, ''Benefit-Cost Analysis of Selected NSPS for Particulate Matter.'' Total PM emissions reduction benefits from this rule are estimated to range from $5.5 million under Scenario B to $5.8 million under Scenario C. Thus *net* monetized costs (after subtracting out monetized benefits) are estimated to range from $65 million under Scenario B to $140 million under Scenario C. Although the monetized benefits associated with PM emission reductions are compared to the estimated annualized emission control costs of the regulation, EPA notes that, because most categories of emissions reductions cannot be monetized, the monetized benefits and therefore the net benefits are understated (in this case annualized costs exceed the monetized benefits so net costs are overstated) for the regulation.

A qualitative discussion of the pollutants that do not have a monetary benefit value shows the significance of other benefits achieved by the rule. Emission reductions of Cd, Pb, HCl, and Hg are expected to occur as a result of the HMIWI rule. Health effects associated with exposures to Cd and Pb include probable carcinogenic effects. Respiratory effects are associated with exposure to Cd, HCl, and Hg. The HAP emitted from HMIWI facilities have also been associated with effects on the central nervous system, neurological system, gastrointestinal system, mucous membranes, and kidneys.

Reduction in emission of dioxin/furan are expected as a result of the HMIWI

rule. Exposure to dioxin/furan has been linked to reproductive and developmental effects, changes in hormone levels, and chloracne. Toxic Equivalent Quantity, or TEQ, has been developed as a measure of the toxicity of dioxin/furan. The TEQ measures the more chlorinated compounds of dioxin/furan and thus provides a better indicator of the part of dioxin/furan that has been linked to the toxic effects associated with dioxin/furan. Unfortunately, quantitative relationships between the toxic effects and exposure to dioxin/furan have not been developed. Therefore, quantitative estimates of the health effects of dioxin/furan emission reductions are not estimated.

Emission reductions are also anticipated for criteria air pollutants. The health effects associated with exposure to PM include premature mortality as well as morbidity. The morbidity effects of PM exposure have been measured in terms of increased hospital and emergency room visits, days of restricted activity or work loss, increased respiratory symptoms, and reductions in lung function. The welfare effects of PM exposure include increased soiling and visibility degradation. Sulfur dioxide has been associated with respiratory symptoms and pulmonary function changes in exercising asthmatics and may also be associated with respiratory symptoms in nonasthmatics. In addition to the effects on human health, SO_2 has also been linked to adverse welfare effects, such as materials damage, visibility degradation, and crop and forestry damage. Carbon monoxide affects the oxygen-carrying capacity of hemoglobin and, at current ambient concentrations, has been related to adverse health effects among persons with cardiovascular and chronic respiratory disease. Both congestive heart failure and angina pectoris have been related to CO exposure. Nitrogen oxides have also been shown to have an adverse impact on both human health and welfare. The effects associated with NO_X include respiratory illness, damages to materials, crops, and forests, and visibility degradation.

3. Effects on the National Economy

The Unfunded Mandates Act requires that the EPA estimate ''the effect'' of this rule

On the national economy, such as the effect on productivity, economic growth, full employment, creation of productive jobs, and international competitiveness of the U.S. goods and services, if and to the extent that the EPA in its sole discretion determines that accurate estimates are reasonably feasible and that such effect is relevant and material.

As stated in the Unfunded Mandates Act, such macroeconomic effects tend to be measurable, in nationwide econometric models, only if the economic impact of the regulation reaches 0.25 to 0.5 percent of gross domestic product (in the range of $15 billion to $30 billion). A regulation with a smaller aggregate effect is highly unlikely to have any measurable impact in macroeconomic terms unless it is highly focused on a particular geographic region or economic sector. Because the economic impact of the HMIWI regulation is less than $1.5 billion, no estimate of this rule's effect on the national economy has been conducted.

4. Consultation with Government Officials

The Unfunded Mandates Act requires that the EPA describe the extent of the EPA's consultation with affected State, local, and Tribal officials, summarize the officials' comments or concerns, and summarize the EPA's response to those comments or concerns. In addition, section 203 of the Unfunded Mandates Act requires that the EPA develop a plan for informing and advising small governments that may be significantly or uniquely impacted by a proposal.

Throughout the development of these rules (pre-proposal through pre-promulgation phases), the EPA consulted with representatives of affected State and local governments, including the U.S. Conference of Mayors, the National Governors Association, the National League of Cities, and the National Association of Counties, to inform them of the 1995 proposed rule and determine their concerns. The EPA also consulted with representatives from other entities affected by the 1995 proposed rule, such as the National Association of Public Hospitals, the American Hospital Association, the Sierra Club, and the Natural Resources Defense Council.

As part of EPA's consultation efforts in this rulemaking, the EPA mailed a copy of the draft regulatory package for the February 1995 proposed HMIWI standards and guidelines to each of the associations mentioned above and to several State and local governments. The EPA also mailed a copy of the February 1995 draft regulatory package to many other associations and stakeholders. At least 60 draft regulatory packages were delivered to government agencies, associations, and stakeholders. Interested parties who were not sent a draft regulatory package were mailed an announcement of the 1995 proposed HMIWI regulations, information on where to obtain a copy of the proposal, and notice of a public meeting held to discuss the proposal and answer any questions to allow stakeholders to better formulate their written comments.

Following the 1995 proposal and prior to the June 1996 re-proposal, the EPA held several public meetings to discuss changes in the HMIWI regulations and to allow opportunity for additional public input. Prior to each meeting, a notice of the meeting and the topics to be discussed was delivered to over 300 stakeholders and government officials. Additionally, many meetings were held with smaller expert groups (e.g., environmental groups, STAPPA/ALAPCO, NAPH, etc.) to discuss specific issues and allow for additional comment. With these efforts, the EPA believes that every affected State and local government, association, and stakeholder, was made aware of the HMIWI rulemaking, provided with the necessary information, and given ample opportunity for input.

Following the 1995 proposal and the 1996 re-proposal, comment letters were received from State, local, and Tribal governments. Additional comments were expressed by State, local, and Tribal governments in meetings held during the course of the rulemaking. Many of the commenters suggested that EPA consider ''tiering'' the standards and guidelines using HMIWI size categories most often used by State environmental agencies. For the most part, these commenters supported the size categories presented in the 1996 re-proposal. Other commenters expressed concern about the lack of medical waste disposal options for facilities in rural locations and suggested that the Agency consider location when developing the standards and guidelines. Many of the commenters requested that the originally proposed broad definition of medical waste be narrowed for the final HMIWI regulations. Some commenters requested that the EPA exclude crematories and incinerators used solely to burn pathological waste from the HMIWI regulations. Also, several commenters requested that the EPA revise the 1995 proposed operator training requirements to allow State-approved programs and onsite operator training.

The EPA has incorporated the suggestions of State, local, and Tribal governments as well as suggestions from other stakeholders into the standards and guidelines being promulgated today. As a result of consultations with affected entities, the final HMIWI standards and guidelines: (1) Subcategorize HMIWI based on the size

categories and technical distinctions most often used by States; (2) allow existing facilities that meet certain rural criteria and operate small HMIWI (≤200 lb/hr) to meet less stringent emission limits; (3) define HMIWI through use of a narrow definition of medical waste which recognizes that most hospital waste is not infectious and can be recycled or disposed of as municipal-type waste; (4) exclude crematories and pathological incinerators; (5) allow for HMIWI operator training and qualification to be obtained through a State-approved program, which may allow facilities to provide training onsite; and (6) focus the regulations on incineration units whose primary purpose is disposal of hospital waste and/or medical/infectious waste by providing an exemption for units burning 10 percent or less hospital waste and medical/infectious waste.

Documentation of the EPA's consideration of comments on the 1995 proposal is provided in the 1996 re-proposal notice. Documentation of EPA's consideration of comments on the 1996 re-proposal is provided in ''Hospital/Medical/Infectious Waste Incinerators: Background Information for Promulgated Standards and Guidelines—Summary of Public Comments and Responses'' (EPA–453/R–97–006b). Refer to the **SUPPLEMENTARY INFORMATION** and **ADDRESSES** sections of this preamble for information on how to acquire copies of these documents.

As discussed in section VI.F, the number of small entities that are significantly affected by the HMIWI regulation is not expected to be substantial. The full analysis of potential regulatory impacts on small organizations, small governments, and small businesses is included in the economic impact assessment in the docket and is listed at the beginning of today's document under **SUPPLEMENTARY INFORMATION.** Because the number of small entities that are likely to experience significant economic impacts as a result of the HMIWI regulation is not expected to be substantial, no plan to inform and advise small governments is required under section 203 of the Unfunded Mandates Act. However, as described above, the EPA has communicated and consulted with small governments and businesses that will be affected by the standards and guidelines, keeping them informed about the content of this promulgation.

E. Executive Order 12875

To reduce the burden of Federal regulations on States and small governments, the President issued Executive Order 12875 on October 26, 1993, entitled ''Enhancing the Intergovernmental Partnership.'' Under Executive Order 12875, the EPA is required to consult with representatives of affected State, local, and Tribal governments, and keep these affected parties informed about the content and effect of the promulgated standards and emission guidelines. Section II.F of this notice provides a brief account of the actions that the EPA has taken to communicate and consult with the affected parties. Because this regulatory action imposes costs to the private sector and government entities in excess of $100 million per year, the EPA pursued consultations, the preparation of an unfunded mandates statement, and other requirements of the Unfunded Mandates Reform Act. The requirements of the Unfunded Mandates Reform Act were met for this rulemaking as presented under VI.D of this notice and also fulfill the requirements of Executive Order 12875.

F. Regulatory Flexibility Act (RFA) and Small Business Regulatory Enforcement Fairness Act of 1996 (SBREFA)

Section 605 of the Regulatory Flexibility Act (RFA) requires Federal agencies to give special consideration to the impacts of regulations on small entities, which are small businesses, small organizations, and small governments. The major purpose of the RFA is to keep paperwork and regulatory requirements from getting out of proportion to the scale of the entities being regulated without compromising the objectives of, in this case, the CAA.

The President signed the Small Business Regulatory Enforcement Fairness Act (SBREFA) into law on March 29, 1996. The SBREFA amended the RFA to strengthen the RFA's analytical and procedural requirements. The SBREFA also made other changes to agency regulatory practices as they affect small entities.

Finally, SBREFA established a new mechanism for expedited Congressional review of virtually all agency rules.

EPA has determined that it is not necessary to prepare a regulatory flexibility analysis in connection with this final rule. The Administrator also has determined that the EG and NSPS for HMIWI will not have a significant economic impact on a substantial number of small entities.

The U.S. Small Business Administration (SBA) definitions pertaining to business size are either specified by number of employees or sales revenue. For analysis of the regulations being promulgated today, the EPA considers a small business or small organization to be one with gross annual revenue less than $5 million or one with less than 500 employees. The EPA considers a small government to be one that serves a population less than 50,000. Three types of small ''entities'' are impacted by the regulation: small businesses, small nonprofit organizations, and small governmental jurisdictions. Examples of impacted businesses include for-profit hospitals and tax-paying nursing homes. Examples of impacted nonprofit organizations include not-for-profit hospitals and, in many cases, tax-exempt nursing homes. Examples of impacted governmental jurisdictions include those (e.g., municipalities, counties, States) that operate hospitals and probably some tax-exempt nursing homes. For a description of EPA's outreach efforts to these small entities and the general public, see section II.F of this preamble.

In accordance with the RFA as amended by the SBREFA and current EPA Guidance, an analysis of impacts of the EG and NSPS on small ''entities'' '' including small businesses, small nonprofit organizations, and small governmental jurisdictions '' was performed. The economic impact analysis indicates that neither the EG nor the NSPS will have a ''significant economic impact on a substantial number of small entities'' under any regulatory option. Impacts are not significant for the vast majority of medical waste generators that send their waste offsite to be treated and disposed. Impacts are also not significant for the great majority of HMIWI operators that would have the opportunity to switch to an alternative method of medical waste treatment and disposal if control costs are prohibitive. Some significant impacts were found for commercial HMIWI operators and for small onsite HMIWI operators that are remote from an urban area. These facilities might not have the opportunity to switch to an alternative medical waste treatment and disposal method '' commercial HMIWI operators because medical waste incineration is their line of business, and small, remote HMIWI because they may not have access to commercial incineration services. However, the number of such facilities that are both significantly impacted under the regulatory option selected for promulgation and ''small'' would be, at the most, only a few, and would therefore not be substantial.

G. Submission to Congress and the General Accounting Office

Under 5 U.S.C. 801(a)(1)(A) of the Administrative Procedures Act, as added by the SBREFA of 1996, the EPA submitted a report containing this rule and other required information to the U.S. Senate, the U.S. House of Representatives, and the Comptroller General of the General Accounting Office prior to publication of the rule in today's **Federal Register**. This rule is a ''major rule'' as defined by 5 U.S.C. 804(2).

H. Clean Air Act Procedural Requirements

The following procedural requirements of the CAA are addressed: Administrative listing, periodic review, external participation, and economic impact assessment.

1. Administrator Listing—Sections 111 and 129 of the Clean Air Act

Section 129 of the 1990 Amendments to the CAA directs the Administrator to promulgate standards for new HMIWI and guidelines for existing HMIWI. Section 129(a) states that the standards and guidelines are promulgated under both sections 129 and 111 of the Clean Air Act.

2. Periodic Review—Sections 111 and 129 of the Clean Air Act

Sections 111 and 129 of the CAA require that the standards and guidelines be reviewed not later than 5 years following the initial promulgation. At that time and at 5-year intervals thereafter, the Administrator shall review the standards and guidelines and revise them if necessary. This review will include an assessment of such factors as the need for integration with other programs, the existence of alternative methods, enforceability, improvements in emission control technology, and reporting requirements.

3. External Participation

In accordance with section 117 of the CAA, publication of this promulgation was preceded by consultation with appropriate advisory committees, independent experts, and Federal departments and agencies. See section II.F of this preamble for a discussion of EPA's consultation efforts.

4. Economic Impact Assessment

Section 317A of the CAA requires the EPA to prepare an economic impact assessment for any standards or guidelines promulgated under section 111(b) of the CAA. An economic impact assessment was prepared for the promulgated standards and guidelines. In the manner described in the sections of this preamble regarding the impacts of and rationale for the promulgated standards and guidelines, the EPA considered all aspects of the economic impact assessment in promulgating the standards and guidelines. The economic impact assessment is included in the list of key technical documents at the beginning of today's notice under **SUPPLEMENTARY INFORMATION**.

List of Subjects in 40 CFR Part 60

Environmental protection, Air pollution control, Intergovernmental relations, Incorporation by reference, Reporting and recordkeeping requirements.

Dated: August 15, 1997.

Carol M. Browner,

Administrator.

Part 60, chapter I, title 40 of the Code of Federal Regulations is amended as follows:

PART 60—STANDARDS OF PERFORMANCE FOR NEW STATIONARY SOURCES

1. The authority citation for part 60 is revised to read as follows:

Authority: 42 U.S.C. 7401, 7411, 7413, 7414, 7416, 7429, 7601 and 7602.

Subpart A—[Amended]

2. Section 60.17. is amended by removing from paragraph (b)(1) the reference ''60.244(f)(2)''; and by adding new paragraphs (k) and (l) to read as follows:

§ 60.17 Incorporation by reference.

* * * * *

(k) This material is available for purchase from the American Hospital Association (AHA) Service, Inc., Post Office Box 92683, Chicago, Illinois 60675–2683. You may inspect a copy at EPA's Air and Radiation Docket and Information Center (Docket A–91–61, Item IV–J–124), Room M–1500, 401 M Street SW, Washington, DC.

(1) An Ounce of Prevention: Waste Reduction Strategies for Health Care Facilities. American Society for Health Care Environmental Services of the American Hospital Association. Chicago, Illinois. 1993. AHA Catalog No. 057007. ISBN 0–87258–673–5. IBR approved for § 60.35e and § 60.55c.

(l) This material is available for purchase from the National Technical Information Services, 5285 Port Royal Road, Springfield, Virginia 22161. You may inspect a copy at EPA's Air and Radiation Docket and Information Center (Docket A–91–61, Item IV–J–125), Room M–1500, 401 M Street SW, Washington, DC.

(1) OMB Bulletin No. 93–17: Revised Statistical Definitions for Metropolitan Areas. Office of Management and Budget, June 30, 1993. NTIS No. PB 93–192–664. IBR approved for § 60.31e.

3. Section 60.30 is revised to read as follows:

§ 60.30 Scope.

The following subparts contain emission guidelines and compliance times for the control of certain designated pollutants in accordance with section 111(d) and section 129 of the Clean Air Act and subpart B of this part.

(a) Subpart Ca—[Reserved]

(b) Subpart Cb—Municipal Waste Combustors.

(c) Subpart Cc—Municipal Solid Waste Landfills.

(d) Subpart Cd—Sulfuric Acid Production Plants.

(e) Subpart Ce—Hospital/Medical/Infectious Waste Incinerators.

4. Part 60 is amended by adding a new subpart Ce to read as follows:

Subpart Ce—Emission Guidelines and Compliance Times for Hospital/Medical/Infectious Waste Incinerators

Sec.
60.30e Scope.
60.31e Definitions.
60.32e Designated facilities.
60.33e Emission guidelines.
60.34e Operator training and qualification guidelines.
60.35e Waste management guidelines.
60.36e Inspection guidelines.
60.37e Compliance, performance testing, and monitoring guidelines.
60.38e Reporting and recordkeeping guidelines.
60.39e Compliance times.
Table 1 to Subpart Ce—Emission Limits for Small, Medium, and Large HMIWI
Table 2 to Subpart Ce—Emission Limits for Small HMIWI which meet the criteria under § 60.33e(b)

Subpart Ce—Emission Guidelines and Compliance Times for Hospital/Medical/Infectious Waste Incinerators

§ 60.30e Scope.

This subpart contains emission guidelines and compliance times for the control of certain designated pollutants from hospital/medical/infectious waste incinerator(s) (HMIWI) in accordance with sections 111 and 129 of the Clean Air Act and subpart B of this part. The provisions in these emission guidelines supersede the provisions of § 60.24(f) of subpart B of this part.

§ 60.31e Definitions.

Terms used but not defined in this subpart have the meaning given them in the Clean Air Act and in subparts A, B, and Ec of this part.

Standard Metropolitan Statistical Area or *SMSA* means any areas listed in OMB Bulletin No. 93–17 entitled ''Revised Statistical Definitions for Metropolitan Areas'' dated June 30, 1993 (incorporated by reference, see § 60.17).

§ 60.32e Designated facilities.

(a) Except as provided in paragraphs (b) through (h) of this section, the designated facility to which the guidelines apply is each individual HMIWI for which construction was commenced on or before June 20, 1996.

(b) A combustor is not subject to this subpart during periods when only pathological waste, low-level radioactive waste, and/or chemotherapeutic waste (all defined in § 60.51c) is burned, provided the owner or operator of the combustor:

(1) Notifies the Administrator of an exemption claim; and

(2) Keeps records on a calendar quarter basis of the periods of time when only pathological waste, low-level radioactive waste, and/or chemotherapeutic waste is burned.

(c) Any co-fired combustor (defined in § 60.51c) is not subject to this subpart if the owner or operator of the co-fired combustor:

(1) Notifies the Administrator of an exemption claim;

(2) Provides an estimate of the relative weight of hospital waste, medical/infectious waste, and other fuels and/or wastes to be combusted; and

(3) Keeps records on a calendar quarter basis of the weight of hospital waste and medical/infectious waste combusted, and the weight of all other fuels and wastes combusted at the co-fired combustor.

(d) Any combustor required to have a permit under Section 3005 of the Solid Waste Disposal Act is not subject to this subpart.

(e) Any combustor which meets the applicability requirements under subpart Cb, Ea, or Eb of this part (standards or guidelines for certain municipal waste combustors) is not subject to this subpart.

(f) Any pyrolysis unit (defined in § 60.51c) is not subject to this subpart.

(g) Cement kilns firing hospital waste and/or medical/infectious waste are not subject to this subpart.

(h) Physical or operational changes made to an existing HMIWI unit solely for the purpose of complying with emission guidelines under this subpart are not considered a modification and do not result in an existing HMIWI unit becoming subject to the provisions of subpart Ec (see § 60.50c).

(i) Beginning September 15, 2000, or on the effective date of an EPA approved operating permit program under Clean Air Act title V and the implementing regulations under 40 CFR part 70 in the State in which the unit is located, whichever date is later, designated facilities subject to this subpart shall operate pursuant to a permit issued under the EPA-approved operating permit program.

§ 60.33e Emission guidelines.

(a) For approval, a State plan shall include the requirements for emission limits at least as protective as those requirements listed in Table 1 of this subpart, except as provided for in paragraph (b) of this section.

(b) For approval, a State plan shall include the requirements for emission limits at least as protective as those requirements listed in Table 2 of this subpart for any small HMIWI which is located more than 50 miles from the boundary of the nearest Standard Metropolitan Statistical Area (defined in § 60.31e) and which burns less than 2,000 pounds per week of hospital waste and medical/infectious waste. The 2,000 lb/week limitation does not apply during performance tests.

(c) For approval, a State plan shall include the requirements for stack opacity at least as protective as § 60.52c(b) of subpart Ec of this part.

§ 60.34e Operator training and qualification guidelines.

For approval, a State plan shall include the requirements for operator training and qualification at least as protective as those requirements listed in § 60.53c of subpart Ec of this part. The State plan shall require compliance with these requirements according to the schedule specified in § 60.39e(e).

§ 60.35e Waste management guidelines.

For approval, a State plan shall include the requirements for a waste management plan at least as protective as those requirements listed in § 60.55c of subpart Ec of this part.

§ 60.36e Inspection guidelines.

(a) For approval, a State plan shall require that each small HMIWI subject to the emission limits under § 60.33e(b) undergo an initial equipment inspection that is at least as protective as the following within 1 year following approval of the State plan:

(1) At a minimum, an inspection shall include the following:

(i) Inspect all burners, pilot assemblies, and pilot sensing devices for proper operation; clean pilot flame sensor, as necessary;

(ii) Ensure proper adjustment of primary and secondary chamber combustion air, and adjust as necessary;

(iii) Inspect hinges and door latches, and lubricate as necessary;

(iv) Inspect dampers, fans, and blowers for proper operation;

(v) Inspect HMIWI door and door gaskets for proper sealing;

(vi) Inspect motors for proper operation;

(vii) Inspect primary chamber refractory lining; clean and repair/replace lining as necessary;

(viii) Inspect incinerator shell for corrosion and/or hot spots;

(ix) Inspect secondary/tertiary chamber and stack, clean as necessary;

(x) Inspect mechanical loader, including limit switches, for proper operation, if applicable;

(xi) Visually inspect waste bed (grates), and repair/seal, as appropriate;

(xii) For the burn cycle that follows the inspection, document that the incinerator is operating properly and make any necessary adjustments;

(xiii) Inspect air pollution control device(s) for proper operation, if applicable;

(xiv) Inspect waste heat boiler systems to ensure proper operation, if applicable;

(xv) Inspect bypass stack components;

(xvi) Ensure proper calibration of thermocouples, sorbent feed systems and any other monitoring equipment; and

(xvii) Generally observe that the equipment is maintained in good operating condition.

(2) Within 10 operating days following an equipment inspection all necessary repairs shall be completed unless the owner or operator obtains written approval from the State agency establishing a date whereby all necessary repairs of the designated facility shall be completed.

(b) For approval, a State plan shall require that each small HMIWI subject to the emission limits under § 60.33e(b) undergo an equipment inspection annually (no more than 12 months following the previous annual equipment inspection), as outlined in paragraphs (a)(1) and (a)(2) of this section.

§ 60.37e Compliance, performance testing, and monitoring guidelines.

(a) Except as provided in paragraph (b) of this section, for approval, a State plan shall include the requirements for compliance and performance testing listed in § 60.56c of subpart Ec of this part, excluding the fugitive emissions testing requirements under § 60.56c(b)(12) and (c)(3).

(b) For approval, a State plan shall require any small HMIWI subject to the emission limits under § 60.33e(b) to

meet the following compliance and performance testing requirements:

(1) Conduct the performance testing requirements in § 60.56c(a), (b)(1) through (b)(9), (b)(11) (Hg only), and (c)(1) of subpart Ec of this part. The 2,000 lb/week limitation under § 60.33e(b) does not apply during performance tests.

(2) Establish maximum charge rate and minimum secondary chamber temperature as site-specific operating parameters during the initial performance test to determine compliance with applicable emission limits.

(3) Following the date on which the initial performance test is completed or is required to be completed under § 60.8, whichever date comes first, ensure that the designated facility does not operate above the maximum charge rate or below the minimum secondary chamber temperature measured as 3-hour rolling averages (calculated each hour as the average of the previous 3 operating hours) at all times except during periods of startup, shutdown and malfunction. Operating parameter limits do not apply during performance tests. Operation above the maximum charge rate or below the minimum secondary chamber temperature shall constitute a violation of the established operating parameter(s).

(4) Except as provided in paragraph (b)(5) of this section, operation of the designated facility above the maximum charge rate and below the minimum secondary chamber temperature (each measured on a 3-hour rolling average) simultaneously shall constitute a violation of the PM, CO, and dioxin/furan emission limits.

(5) The owner or operator of a designated facility may conduct a repeat performance test within 30 days of violation of applicable operating parameter(s) to demonstrate that the designated facility is not in violation of the applicable emission limit(s). Repeat performance tests conducted pursuant to this paragraph must be conducted using the identical operating parameters that indicated a violation under paragraph (b)(4) of this section.

(c) For approval, a State plan shall include the requirements for monitoring listed in § 60.57c of subpart Ec of this part, except as provided for under paragraph (d) of this section.

(d) For approval, a State plan shall include requirements for any small HMIWI subject to the emission limits under § 60.33e(b) to meet the following monitoring requirements:

(1) Install, calibrate (to manufacturers' specifications), maintain, and operate a device for measuring and recording the temperature of the secondary chamber on a continuous basis, the output of which shall be recorded, at a minimum, once every minute throughout operation.

(2) Install, calibrate (to manufacturers' specifications), maintain, and operate a device which automatically measures and records the date, time, and weight of each charge fed into the HMIWI.

(3) The owner or operator of a designated facility shall obtain monitoring data at all times during HMIWI operation except during periods of monitoring equipment malfunction, calibration, or repair. At a minimum, valid monitoring data shall be obtained for 75 percent of the operating hours per day and for 90 percent of the operating hours per calendar quarter that the designated facility is combusting hospital waste and/or medical/infectious waste.

§ 60.38e Reporting and recordkeeping guidelines.

(a) For approval, a State plan shall include the reporting and recordkeeping requirements listed in § 60.58c(b), (c), (d), (e), and (f) of subpart Ec of this part, excluding § 60.58c(b)(2)(ii) (fugitive emissions) and (b)(7) (siting).

(b) For approval, a State plan shall require the owner or operator of each small HMIWI subject to the emission limits under § 60.33e(b) to:

(1) Maintain records of the annual equipment inspections, any required maintenance, and any repairs not completed within 10 days of an inspection or the timeframe established by the State regulatory agency; and

(2) Submit an annual report containing information recorded under paragraph (b)(1) of this section no later than 60 days following the year in which data were collected. Subsequent reports shall be sent no later than 12 calendar months following the previous report (once the unit is subject to permitting requirements under Title V of the Act, the owner or operator must submit these reports semiannually). The report shall be signed by the facilities manager.

§ 60.39e Compliance times.

(a) Not later than September 15, 1998, each State in which a designated facility is operating shall submit to the Administrator a plan to implement and enforce the emission guidelines.

(b) Except as provided in paragraphs (c) and (d) of this section, State plans shall provide that designated facilities comply with all requirements of the State plan on or before the date 1 year after EPA approval of the State plan, regardless of whether a designated facility is identified in the State plan inventory required by § 60.25(a) of subpart B of this part.

(c) State plans that specify measurable and enforceable incremental steps of progress towards compliance for designated facilities planning to install the necessary air pollution control equipment may allow compliance on or before the date 3 years after EPA approval of the State plan (but not later than the September 16, 2002. Suggested measurable and enforceable activities to be included in State plans are:

(1) Date for submitting a petition for site specific operating parameters under § 60.56c(i) of subpart Ec of this part.

(2) Date for obtaining services of an architectural and engineering firm regarding the air pollution control device(s);

(3) Date for obtaining design drawings of the air pollution control device(s);

(4) Date for ordering the air pollution control device(s);

(5) Date for obtaining the major components of the air pollution control device(s);

(6) Date for initiation of site preparation for installation of the air pollution control device(s);

(7) Date for initiation of installation of the air pollution control device(s);

(8) Date for initial startup of the air pollution control device(s); and

(9) Date for initial compliance test(s) of the air pollution control device(s).

(d) State plans that include provisions allowing designated facilities to petition the State for extensions beyond the compliance times required in paragraph (b) of this section shall:

(1) Require that the designated facility requesting an extension submit the following information in time to allow the State adequate time to grant or deny the extension within 1 year after EPA approval of the State plan:

(i) Documentation of the analyses undertaken to support the need for an extension, including an explanation of why up to 3 years after EPA approval of the State plan is sufficient time to comply with the State plan while 1 year after EPA approval of the State plan is not sufficient. The documentation shall also include an evaluation of the option to transport the waste offsite to a commercial medical waste treatment and disposal facility on a temporary or permanent basis; and

(ii) Documentation of measurable and enforceable incremental steps of progress to be taken towards compliance with the emission guidelines.

(2) Include procedures for granting or denying the extension; and

(3) If an extension is granted, require compliance with the emission

guidelines on or before the date 3 years after EPA approval of the State plan (but not later than September 16, 2002.

(e) For approval, a State plan shall require compliance with § 60.34e—Operator training and qualification guidelines and § 60.36e—Inspection guidelines by the date 1 year after EPA approval of a State plan.

(f) The Administrator shall develop, implement, and enforce a plan for existing HMIWI located in any State that has not submitted an approvable plan within date 2 years after September 15, 1997. Such plans shall ensure that each designated facility is in compliance with the provisions of this subpart no later than date 5 years after September 15, 1997.

TABLE 1 TO SUBPART CE.—EMISSION LIMITS FOR SMALL, MEDIUM, AND LARGE HMIWI

Pollutant	Units (7 percent oxygen, dry basis)	Emission limits		
		HMIWI size		
		Small	Medium	Large
Particulate matter	Milligrams per dry standard cubic meter (grains per dry standard cubic foot).	115 (0.05)	69 (0.03)	34 (0.015).
Carbon monoxide	Parts per million by volume	40	40	40.
Dioxins/furans	Nanograms per dry standard cubic meter total dioxins/furans (grains per billion dry standard cubic feet) or nanograms per dry standard cubic meter TEQ (grains per billion dry standard cubic feet).	125 (55) or 2.3 (1.0)	125 (55) or 2.3 (1.0)	125 (55) or 2.3 (1.0).
Hydrogen chloride	Parts per million by volume or percent reduction.	100 or 93%	100 or 93%	100 or 93%.
Sulfur dioxide	Parts per million by volume	55	55	55.
Nitrogen oxides	Parts per million by volume	250	250	250.
Lead	Milligrams per dry standard cubic meter (grains per thousand dry standard cubic feet) or percent reduction.	1.2 (0.52) or 70%	1.2 (0.52) or 70%	1.2 (0.52) or 70%.
Cadmium	Milligrams per dry standard cubic meter (grains per thousand dry standard cubic feet) or percent reduction.	0.16 (0.07) or 65%	0.16 (0.07) or 65%.	
Mercury	Milligrams per dry standard cubic meter (grains per thousand dry standard cubic feet) or percent reduction.	0.55 (0.24) or 85%	0.55 (0.24) or 85%	0.55 (0.24) or 85%.

TABLE 2 TO SUBPART CE.—EMISSIONS LIMITS FOR SMALL HMIWI WHICH MEET THE CRITERIA UNDER § 60.33E(B)

Pollutant	Units (7 percent oxygen, dry basis)	HMIWI emission limits
Particulate matter	Milligrams per dry standard cubic meter (grains per dry standard cubic foot)	197 (0.086).
Carbon monoxide	Parts per million by volume	40.
Dioxins/furans	nanograms per dry standard cubic meter total dioxins/furans (grains per billion dry standard cubic feet) or nanograms per dry standard cubic meter TEQ (grains per billion dry standard cubic feet).	800 (350) or 15 (6.6).
Hydrogen chloride	Parts per million by volume	3100.
Sulfur dioxide	Parts per million by volume	55.
Nitrogen oxides	Parts per million by volume	250.
Lead	Milligrams per dry standard cubic meter (grains per thousand dry standard cubic feet).	10 (4.4).
Cadmium	Milligrams per dry standard cubic meter (grains per thousand dry standard cubic feet).	4 (1.7).
Mercury	Milligrams per dry standard cubic meter (grains per thousands dry standard cubic feet).	7.5 (3.3).

5. Part 60 is amended by adding a new subpart Ec to read as follows:

Subpart Ec—Standards of Performance for Hospital/Medical/Infectious Waste Incinerators for Which Construction Is Commenced After June 20, 1996

60.50c Applicability and delegation of authority.
60.51c Definitions.
60.52c Emission limits.
60.53c Operator training and qualification requirements.
60.54c Siting requirements.
60.55c Waste management plan.
60.56c Compliance and performance testing.
60.57c Monitoring requirements.
60.58c Reporting and recordkeeping requirements.
Table 1 to Subpart Ec—Emission Limits for Small, Medium, and Large HMIWI
Table 2 to Subpart Ec—Toxic Equivalency Factors
Table 3 to Subpart Ec—Operating Parameters to be Monitored and Minimum Measurement and Recording Frequencies

Subpart Ec—Standards of Performance for Hospital/Medical/Infectious Waste Incinerators for Which Construction Is Commenced After June 20, 1996

§ 60.50c Applicability and delegation of authority.

(a) Except as provided in paragraphs (b) through (h) of this section, the affected facility to which this subpart applies is each individual hospital/medical/infectious waste incinerator (HMIWI) for which construction is

commenced after June 20, 1996 or for which modification is commenced after March 16, 1998.

(b) A combustor is not subject to this subpart during periods when only pathological waste, low-level radioactive waste, and/or chemotherapeutic waste (all defined in § 60.51c) is burned, provided the owner or operator of the combustor:

(1) Notifies the Administrator of an exemption claim; and

(2) Keeps records on a calendar quarter basis of the periods of time when only pathological waste, low-level radioactivewaste and/or chemotherapeutic waste is burned.

(c) Any co-fired combustor (defined in § 60.51c) is not subject to this subpart if the owner or operator of the co-fired combustor:

(1) Notifies the Administrator of an exemption claim;

(2) Provides an estimate of the relative amounts of hospital waste, medical/infectious waste, and other fuels and wastes to be combusted; and

(3) Keeps records on a calendar quarter basis of the weight of hospital waste and medical/infectious waste combusted, and the weight of all other fuels and wastes combusted at the co-fired combustor.

(d) Any combustor required to have a permit under section 3005 of the Solid Waste Disposal Act is not subject to this subpart.

(e) Any combustor which meets the applicability requirements under subpart Cb, Ea, or Eb of this part (standards or guidelines for certain municipal waste combustors) is not subject to this subpart.

(f) Any pyrolysis unit (defined in § 60.51c) is not subject to this subpart.

(g) Cement kilns firing hospital waste and/or medical/infectious waste are not subject to this subpart.

(h) Physical or operational changes made to an existing HMIWI solely for the purpose of complying with emission guidelines under subpart Ce are not considered a modification and do not result in an existing HMIWI becoming subject to this subpart.

(i) In delegating implementation and enforcement authority to a State under section 111(c) of the Clean Air Act, the following authorities shall be retained by the Administrator and not transferred to a State:

(1) The requirements of § 60.56c(i) establishing operating parameters when using controls other than those listed in § 60.56c(d).

(2) Alternative methods of demonstrating compliance under § 60.8.

(j) Affected facilities subject to this subpart are not subject to the requirements of 40 CFR part 64.

(k) The requirements of this subpart shall become effective March 16, 1998

(l) Beginning September 15, 2000, or on the effective date of an EPA-approved operating permit program under Clean Air Act title V and the implementing regulations under 40 CFR part 70 in the State in which the unit is located, whichever date is later, affected facilities subject to this subpart shall operate pursuant to a permit issued under the EPA approved State operating permit program.

§ 60.51c Definitions.

Batch HMIWI means an HMIWI that is designed such that neither waste charging nor ash removal can occur during combustion.

Biologicals means preparations made from living organisms and their products, including vaccines, cultures, etc., intended for use in diagnosing, immunizing, or treating humans or animals or in research pertaining thereto.

Blood Products means any product derived from human blood, including but not limited to blood plasma, platelets, red or white blood corpuscles, and other derived licensed products, such as interferon, etc.

Body Fluids means liquid emanating or derived from humans and limited to blood; dialysate; amniotic, cerebrospinal, synovial, pleural, peritoneal and pericardial fluids; and semen and vaginal secretions.

Bypass stack means a device used for discharging combustion gases to avoid severe damage to the air pollution control device or other equipment.

Chemotherapeutic waste means waste material resulting from the production or use of antineoplastic agents used for the purpose of stopping or reversing the growth of malignant cells.

Co-fired combustor means a unit combusting hospital waste and/or medical/infectious waste with other fuels or wastes (e.g., coal, municipal solid waste) and subject to an enforceable requirement limiting the unit to combusting a fuel feed stream, 10 percent or less of the weight of which is comprised, in aggregate, of hospital waste and medical/infectious waste as measured on a calendar quarter basis. For purposes of this definition, pathological waste, chemotherapeutic waste, and low-level radioactive waste are considered ''other'' wastes when calculating the percentage of hospital waste and medical/infectious waste combusted.

Continuous emission monitoring system or *CEMS* means a monitoring system for continuously measuring and recording the emissions of a pollutant from an affected facility.

Continuous HMIWI means an HMIWI that is designed to allow waste charging and ash removal during combustion.

Dioxins/furans means the combined emissions of tetra-through octa-chlorinated dibenzo-para-dioxins and dibenzofurans, as measured by EPA Reference Method 23.

Dry scrubber means an add-on air pollution control system that injects dry alkaline sorbent (dry injection) or sprays an alkaline sorbent (spray dryer) to react with and neutralize acid gases in the HMIWI exhaust stream forming a dry powder material.

Fabric filter or *baghouse* means an add-on air pollution control system that removes particulate matter (PM) and nonvaporous metals emissions by passing flue gas through filter bags.

Facilities manager means the individual in charge of purchasing, maintaining, and operating the HMIWI or the owner's or operator's representative responsible for the management of the HMIWI. Alternative titles may include director of facilities or vice president of support services.

High-air phase means the stage of the batch operating cycle when the primary chamber reaches and maintains maximum operating temperatures.

Hospital means any facility which has an organized medical staff, maintains at least six inpatient beds, and where the primary function of the institution is to provide diagnostic and therapeutic patient services and continuous nursing care primarily to human inpatients who are not related and who stay on average in excess of 24 hours per admission. This definition does not include facilities maintained for the sole purpose of providing nursing or convalescent care to human patients who generally are not acutely ill but who require continuing medical supervision.

Hospital/medical/infectious waste incinerator or *HMIWI* or *HMIWI unit* means any device that combusts any amount of hospital waste and/or medical/infectious waste.

Hospital/medical/infectious waste incinerator operator or *HMIWI operator* means any person who operates, controls or supervises the day-to-day operation of an HMIWI.

Hospital waste means discards generated at a hospital, except unused items returned to the manufacturer. The definition of hospital waste does not include human corpses, remains, and anatomical parts that are intended for interment or cremation.

Infectious agent means any organism (such as a virus or bacteria) that is

capable of being communicated by invasion and multiplication in body tissues and capable of causing disease or adverse health impacts in humans.

Intermittent HMIWI means an HMIWI that is designed to allow waste charging, but not ash removal, during combustion.

Large HMIWI means:

(1) Except as provided in (2);

(i) An HMIWI whose maximum design waste burning capacity is more than 500 pounds per hour; or

(ii) A continuous or intermittent HMIWI whose maximum charge rate is more than 500 pounds per hour; or

(iii) A batch HMIWI whose maximum charge rate is more than 4,000 pounds per day.

(2) The following are not large HMIWI:

(i) A continuous or intermittent HMIWI whose maximum charge rate is less than or equal to 500 pounds per hour; or

(ii) A batch HMIWI whose maximum charge rate is less than or equal to 4,000 pounds per day.

Low-level radioactive waste means waste material which contains radioactive nuclides emitting primarily beta or gamma radiation, or both, in concentrations or quantities that exceed applicable federal or State standards for unrestricted release. Low-level radioactive waste is not high-level radioactive waste, spent nuclear fuel, or by-product material as defined by the Atomic Energy Act of 1954 (42 U.S.C. 2014(e)(2)).

Malfunction means any sudden, infrequent, and not reasonably preventable failure of air pollution control equipment, process equipment, or a process to operate in a normal or usual manner. Failures that are caused, in part, by poor maintenance or careless operation are not malfunctions. During periods of malfunction the operator shall operate within established parameters as much as possible, and monitoring of all applicable operating parameters shall continue until all waste has been combusted or until the malfunction ceases, whichever comes first.

Maximum charge rate means:

(1) For continuous and intermittent HMIWI, 110 percent of the lowest 3-hour average charge rate measured during the most recent performance test demonstrating compliance with all applicable emission limits.

(2) For batch HMIWI, 110 percent of the lowest daily charge rate measured during the most recent performance test demonstrating compliance with all applicable emission limits.

Maximum design waste burning capacity means:

(1) For intermittent and continuous HMIWI,

$C=P_V \times 15{,}000/8{,}500$

Where:

C=HMIWI capacity, lb/hr

P_V=primary chamber volume, ft^3

15,000=primary chamber heat release rate factor, $Btu/ft^3/hr$

8,500=standard waste heating value, Btu/lb;

(2) For batch HMIWI,

$C=P_V \times 4.5/8$

Where:

C=HMIWI capacity, lb/hr

P_V=primary chamber volume, ft^3

4.5=waste density, lb/ft^3

8=typical hours of operation of a batch HMIWI, hours.

Maximum fabric filter inlet temperature means 110 percent of the lowest 3-hour average temperature at the inlet to the fabric filter (taken, at a minimum, once every minute) measured during the most recent performance test demonstrating compliance with the dioxin/furan emission limit.

Maximum flue gas temperature means 110 percent of the lowest 3-hour average temperature at the outlet from the wet scrubber (taken, at a minimum, once every minute) measured during the most recent performance test demonstrating compliance with the mercury (Hg) emission limit.

Medical/infectious waste means any waste generated in the diagnosis, treatment, or immunization of human beings or animals, in research pertaining thereto, or in the production or testing of biologicals that is listed in paragraphs (1) through (7) of this definition. The definition of medical/infectious waste does not include hazardous waste identified or listed under the regulations in part 261 of this chapter; household waste, as defined in § 261.4(b)(1) of this chapter; ash from incineration of medical/infectious waste, once the incineration process has been completed; human corpses, remains, and anatomical parts that are intended for interment mation; and domestic sewage materials identified in § 261.4(a)(1) of this chapter.

(1) Cultures and stocks of infectious agents and associated biologicals, including: cultures from medical and pathological laboratories; cultures and stocks of infectious agents from research and industrial laboratories; wastes from the production of biologicals; discarded live and attenuated vaccines; and culture dishes and devices used to transfer, inoculate, and mix cultures.

(2) Human pathological waste, including tissues, organs, and body parts and body fluids that are removed during surgery or autopsy, or other medical procedures, and specimens of body fluids and their containers.

(3) Human blood and blood products including:

(i) Liquid waste human blood;

(ii) Products of blood;

(iii) Items saturated and/or dripping with human blood; or

(iv) Items that were saturated and/or dripping with human blood that are now caked with dried human blood; including serum, plasma, and other blood components, and their containers, which were used or intended for use in either patient care, testing and laboratory analysis or the development of pharmaceuticals. Intravenous bags are also include in this category.

(4) Sharps that have been used in animal or human patient care or treatment or in medical, research, or industrial laboratories, including hypodermic needles, syringes (with or without the attached needle), pasteur pipettes, scalpel blades, blood vials, needles with attached tubing, and culture dishes (regardless of presence of infectious agents). Also included are other types of broken or unbroken glassware that were in contact with infectious agents, such as used slides and cover slips.

(5) Animal waste including contaminated animal carcasses, body parts, and bedding of animals that were known to have been exposed to infectious agents during research (including research in veterinary hospitals), production of biologicals or testing of pharmaceuticals.

(6) Isolation wastes including biological waste and discarded materials contaminated with blood, excretions, exudates, or secretions from humans who are isolated to protect others from certain highly communicable diseases, or isolated animals known to be infected with highly communicable diseases.

(7) Unused sharps including the following unused, discarded sharps: hypodermic needles, suture needles, syringes, and scalpel blades.

Medium HMIWI means:

(1) Except as provided in paragraph (2);

(i) An HMIWI whose maximum design waste burning capacity is more than 200 pounds per hour but less than or equal to 500 pounds per hour; or

(ii) A continuous or intermittent HMIWI whose maximum charge rate is more than 200 pounds per hour but less than or equal to 500 pounds per hour; or

(iii) A batch HMIWI whose maximum charge rate is more than 1,600 pounds per day but less than or equal to 4,000 pounds per day.

(2) The following are not medium HMIWI:

(i) A continuous or intermittent HMIWI whose maximum charge rate is less than or equal to 200 pounds per hour or more than 500 pounds per hour; or

(ii) A batch HMIWI whose maximum charge rate is more than 4,000 pounds per day or less than or equal to 1,600 pounds per day.

Minimum dioxin/furan sorbent flow rate means 90 percent of the highest 3-hour average dioxin/furan sorbent flow rate (taken, at a minimum, once every hour) measured during the most recent performance test demonstrating compliance with the dioxin/furan emission limit.

Minimum Hg sorbent flow rate means 90 percent of the highest 3-hour average Hg sorbent flow rate (taken, at a minimum, once every hour) measured during the most recent performance test demonstrating compliance with the Hg emission limit.

Minimum hydrogen chloride (HCl) sorbent flow rate means 90 percent of the highest 3-hour average HCl sorbent flow rate (taken, at a minimum, once every hour) measured during the most recent performance test demonstrating compliance with the HCl emission limit.

Minimum horsepower or amperage means 90 percent of the highest 3-hour average horsepower or amperage to the wet scrubber (taken, at a minimum, once every minute) measured during the most recent performance test demonstrating compliance with the applicable emission limits.

Minimum pressure drop across the wet scrubber means 90 percent of the highest 3-hour average pressure drop across the wet scrubber PM control device (taken, at a minimum, once every minute) measured during the most recent performance test demonstrating compliance with the PM emission limit.

Minimum scrubber liquor flow rate means 90 percent of the highest 3-hour average liquor flow rate at the inlet to the wet scrubber (taken, at a minimum, once every minute) measured during the most recent performance test demonstrating compliance with all applicable emission limits.

Minimum scrubber liquor pH means 90 percent of the highest 3-hour average liquor pH at the inlet to the wet scrubber (taken, at a minimum, once every minute) measured during the most recent performance test demonstrating compliance with the HCl emission limit.

Minimum secondary chamber temperature means 90 percent of the highest 3-hour average secondary chamber temperature (taken, at a minimum, once every minute) measured during the most recent performance test demonstrating compliance with the PM, CO, or dioxin/furan emission limits.

Modification or *Modified HMIWI* means any change to an HMIWI unit after the effective date of these standards such that:

(1) The cumulative costs of the modifications, over the life of the unit, exceed 50 per centum of the original cost of the construction and installation of the unit (not including the cost of any land purchased in connection with such construction or installation) updated to current costs, or

(2) The change involves a physical change in or change in the method of operation of the unit which increases the amount of any air pollutant emitted by the unit for which standards have been established under section 129 or section 111.

Operating day means a 24-hour period between 12:00 midnight and the following midnight during which any amount of hospital waste or medical/infectious waste is combusted at any time in the HMIWI.

Operation means the period during which waste is combusted in the incinerator excluding periods of startup or shutdown.

Particulate matter or *PM* means the total particulate matter emitted from an HMIWI as measured by EPA Reference Method 5 or EPA Reference Method 29.

Pathological waste means waste material consisting of only human or animal remains, anatomical parts, and/or tissue, the bags/containers used to collect and transport the waste material, and animal bedding (if applicable).

Primary chamber means the chamber in an HMIWI that receives waste material, in which the waste is ignited, and from which ash is removed.

Pyrolysis means the endothermic gasification of hospital waste and/or medical/infectious waste using external energy.

Secondary chamber means a component of the HMIWI that receives combustion gases from the primary chamber and in which the combustion process is completed.

Shutdown means the period of time after all waste has been combusted in the primary chamber. For continuous HMIWI, shutdown shall commence no less than 2 hours after the last charge to the incinerator. For intermittent HMIWI, shutdown shall commence no less than 4 hours after the last charge to the incinerator. For batch HMIWI, shutdown shall commence no less than 5 hours after the high-air phase of combustion has been completed.

Small HMIWI means:

(1) Except as provided in (2);

(i) An HMIWI whose maximum design waste burning capacity is less than or equal to 200 pounds per hour; or

(ii) A continuous or intermittent HMIWI whose maximum charge rate is less than or equal to 200 pounds per hour; or

(iii) A batch HMIWI whose maximum charge rate is less than or equal to 1,600 pounds per day.

(2) The following are not small HMIWI:

(i) A continuous or intermittent HMIWI whose maximum charge rate is more than 200 pounds per hour;

(ii) A batch HMIWI whose maximum charge rate is more than 1,600 pounds per day.

Standard conditions means a temperature of 20° C and a pressure of 101.3 kilopascals.

Startup means the period of time between the activation of the system and the first charge to the unit. For batch HMIWI, startup means the period of time between activation of the system and ignition of the waste.

Wet scrubber means an add-on air pollution control device that utilizes an alkaline scrubbing liquor to collect particulate matter (including nonvaporous metals and condensed organics) and/or to absorb and neutralize acid gases.

§ 60.52c Emission limits.

(a) On and after the date on which the initial performance test is completed or is required to be completed under § 60.8, whichever date comes first, no owner or operator of an affected facility shall cause to be discharged into the atmosphere from that affected facility any gases that contain stack emissions in excess of the limits presented in Table 1 of this subpart.

(b) On and after the date on which the initial performance test is completed or is required to be completed under § 60.8, whichever date comes first, no owner or operator of an affected facility shall cause to be discharged into the atmosphere from the stack of that affected facility any gases that exhibit greater than 10 percent opacity (6-minute block average).

(c) On and after the date on which the initial performance test is completed or is required to be completed under § 60.8, whichever date comes first, no owner or operator of an affected facility utilizing a large HMIWI shall cause to be discharged into the atmosphere visible emissions of combustion ash from an ash conveying system (including conveyor transfer points) in excess of 5 percent of the observation period (i.e., 9 minutes per 3-hour period), as

determined by EPA Reference Method 22, except as provided in paragraphs (d) and (e) of this section.

(d) The emission limit specified in paragraph (c) of this section does not cover visible emissions discharged inside buildings or enclosures of ash conveying systems; however, the emission limit does cover visible emissions discharged to the atmosphere from buildings or enclosures of ash conveying systems.

(e) The provisions specified in paragraph (c) of this section do not apply during maintenance and repair of ash conveying systems. Maintenance and/or repair shall not exceed 10 operating days per calendar quarter unless the owner or operator obtains written approval from the State agency establishing a date whereby all necessary maintenance and repairs of ash conveying systems shall be completed.

§ 60.53c Operator training and qualification requirements.

(a) No owner or operator of an affected facility shall allow the affected facility to operate at any time unless a fully trained and qualified HMIWI operator is accessible, either at the facility or available within 1 hour. The trained and qualified HMIWI operator may operate the HMIWI directly or be the direct supervisor of one or more HMIWI operators.

(b) Operator training and qualification shall be obtained through a State-approved program or by completing the requirements included in paragraphs (c) through (g) of this section.

(c) Training shall be obtained by completing an HMIWI operator training course that includes, at a minimum, the following provisions:

(1) 24 hours of training on the following subjects:

(i) Environmental concerns, including pathogen destruction and types of emissions;

(ii) Basic combustion principles, including products of combustion;

(iii) Operation of the type of incinerator to be used by the operator, including proper startup, waste charging, and shutdown procedures;

(iv) Combustion controls and monitoring;

(v) Operation of air pollution control equipment and factors affecting performance (if applicable);

(vi) Methods to monitor pollutants (continuous emission monitoring systems and monitoring of HMIWI and air pollution control device operating parameters) and equipment calibration procedures (where applicable);

(vii) Inspection and maintenance of the HMIWI, air pollution control devices, and continuous emission monitoring systems;

(viii) Actions to correct malfunctions or conditions that may lead to malfunction;

(ix) Bottom and fly ash characteristics and handling procedures;

(x) Applicable Federal, State, and local regulations;

(xi) Work safety procedures;

(xii) Pre-startup inspections; and

(xiii) Recordkeeping requirements.

(2) An examination designed and administered by the instructor.

(3) Reference material distributed to the attendees covering the course topics.

(d) Qualification shall be obtained by:

(1) Completion of a training course that satisfies the criteria under paragraph (c) of this section; and

(2) Either 6 months experience as an HMIWI operator, 6 months experience as a direct supervisor of an HMIWI operator, or completion of at least two burn cycles under the observation of two qualified HMIWI operators.

(e) Qualification is valid from the date on which the examination is passed or the completion of the required experience, whichever is later.

(f) To maintain qualification, the trained and qualified HMIWI operator shall complete and pass an annual review or refresher course of at least 4 hours covering, at a minimum, the following:

(1) Update of regulations;

(2) Incinerator operation, including startup and shutdown procedures;

(3) Inspection and maintenance;

(4) Responses to malfunctions or conditions that may lead to malfunction; and

(5) Discussion of operating problems encountered by attendees.

(g) A lapsed qualification shall be renewed by one of the following methods:

(1) For a lapse of less than 3 years, the HMIWI operator shall complete and pass a standard annual refresher course described in paragraph (f) of this section.

(2) For a lapse of 3 years or more, the HMIWI operator shall complete and pass a training course with the minimum criteria described in paragraph (c) of this section.

(h) The owner or operator of an affected facility shall maintain documentation at the facility that address the following:

(1) Summary of the applicable standards under this subpart;

(2) Description of basic combustion theory applicable to an HMIWI;

(3) Procedures for receiving, handling, and charging waste;

(4) HMIWI startup, shutdown, and malfunction procedures;

(5) Procedures for maintaining proper combustion air supply levels;

(6) Procedures for operating the HMIWI and associated air pollution control systems within the standards established under this subpart;

(7) Procedures for responding to periodic malfunction or conditions that may lead to malfunction;

(8) Procedures for monitoring HMIWI emissions;

(9) Reporting and recordkeeping procedures; and

(10) Procedures for handling ash.

(i) The owner or operator of an affected facility shall establish a program for reviewing the information listed in paragraph (h) of this section annually with each HMIWI operator (defined in § 60.51c).

(1) The initial review of the information listed in paragraph (h) of this section shall be conducted within 6 months after the effective date of this subpart or prior to assumption of responsibilities affecting HMIWI operation, whichever date is later.

(2) Subsequent reviews of the information listed in paragraph (h) of this section shall be conducted annually.

(j) The information listed in paragraph (h) of this section shall be kept in a readily accessible location for all HMIWI operators. This information, along with records of training shall be available for inspection by the EPA or its delegated enforcement agent upon request.

§ 60.54c Siting requirements.

(a) The owner or operator of an affected facility for which construction is commenced after September 15, 1997 shall prepare an analysis of the impacts of the affected facility. The analysis shall consider air pollution control alternatives that minimize, on a site-specific basis, to the maximum extent practicable, potential risks to public health or the environment. In considering such alternatives, the analysis may consider costs, energy impacts, non-air environmental impacts, or any other factors related to the practicability of the alternatives.

(b) Analyses of facility impacts prepared to comply with State, local, or other Federal regulatory requirements may be used to satisfy the requirements of this section, as long as they include the consideration of air pollution control alternatives specified in paragraph (a) of this section.

(c) The owner or operator of the affected facility shall complete and submit the siting requirements of this section as required under § 60.58c(a)(1)(iii).

§ 60.55c Waste management plan.

The owner or operator of an affected facility shall prepare a waste management plan. The waste management plan shall identify both the feasibility and the approach to separate certain components of solid waste from the health care waste stream in order to reduce the amount of toxic emissions from incinerated waste. A waste management plan may include, but is not limited to, elements such as paper, cardboard, plastics, glass, battery, or metal recycling; or purchasing recycled or recyclable products. A waste management plan may include different goals or approaches for different areas or departments of the facility and need not include new waste management goals for every waste stream. It should identify, where possible, reasonably available additional waste management measures, taking into account the effectiveness of waste management measures already in place, the costs of additional measures, the emission reductions expected to be achieved, and any other environmental or energy impacts they might have. The American Hospital Association publication entitled ''An Ounce of Prevention: Waste Reduction Strategies for Health Care Facilities'' (incorporated by reference, see § 60.17) shall be considered in the development of the waste management plan.

§ 60.56c Compliance and performance testing.

(a) The emission limits under this subpart apply at all times except during periods of startup, shutdown, or malfunction, provided that no hospital waste or medical/infectious waste is charged to the affected facility during startup, shutdown, or malfunction.

(b) The owner or operator of an affected facility shall conduct an initial performance test as required under § 60.8 to determine compliance with the emission limits using the procedures and test methods listed in paragraphs (b)(1) through (b)(12) of this section. The use of the bypass stack during a performance test shall invalidate the performance test.

(1) All performance tests shall consist of a minimum of three test runs conducted under representative operating conditions.

(2) The minimum sample time shall be 1 hour per test run unless otherwise indicated.

(3) EPA Reference Method 1 of appendix A of this part shall be used to select the sampling location and number of traverse points.

(4) EPA Reference Method 3 or 3A of appendix A of this part shall be used for gas composition analysis, including measurement of oxygen concentration. EPA Reference Method 3 or 3A of appendix A of this part shall be used simultaneously with each reference method.

(5) The pollutant concentrations shall be adjusted to 7 percent oxygen using the following equation:

$C_{adj}=C_{meas}$ (20.9—7)/(20.9—$\%O_2$) where:

C_{adj}=pollutant concentration adjusted to 7 percent oxygen;

C_{meas}=pollutant concentration measured on a dry basis (20.9—7)=20.9 percent oxygen—7 percent oxygen (defined oxygen correction basis);

20.9=oxygen concentration in air, percent; and

$\%O_2$=oxygen concentration measured on a dry basis, percent.

(6) EPA Reference Method 5 or 29 of appendix A of this part shall be used to measure the particulate matter emissions.

(7) EPA Reference Method 9 of appendix A of this part shall be used to measure stack opacity.

(8) EPA Reference Method 10 or 10B of appendix A of this part shall be used to measure the CO emissions.

(9) EPA Reference Method 23 of appendix A of this part shall be used to measure total dioxin/furan emissions. The minimum sample time shall be 4 hours per test run. If the affected facility has selected the toxic equivalency standards for dioxin/furans, under § 60.52c, the following procedures shall be used to determine compliance:

(i) Measure the concentration of each dioxin/furan tetra-through octa-congener emitted using EPA Reference Method 23.

(ii) For each dioxin/furan congener measured in accordance with paragraph (b)(9)(i) of this section, multiply the congener concentration by its corresponding toxic equivalency factor specified in Table 2 of this subpart.

(iii) Sum the products calculated in accordance with paragraph (b)(9)(ii) of this section to obtain the total concentration of dioxins/furans emitted in terms of toxic equivalency.

(10) EPA Reference Method 26 of appendix A of this part shall be used to measure HCl emissions. If the affected facility has selected the percentage reduction standards for HCl under § 60.52c, the percentage reduction in HCl emissions ($\%R_{HCl}$) is computed using the following formula:

$$(\%R_{HCl}) = \left(\frac{E_i - E_o}{E_i}\right) \times 100$$

Where:

$\%R_{HCl}$=percentage reduction of HCl emissions achieved;

E_i=HCl emission concentration measured at the control device inlet, corrected to 7 percent oxygen (dry basis); and

E_o=HCl emission concentration measured at the control device outlet, corrected to 7 percent oxygen (dry basis).

(11) EPA Reference Method 29 of appendix A of this part shall be used to measure Pb, Cd, and Hg emissions. If the affected facility has selected the percentage reduction standards for metals under § 60.52c, the percentage reduction in emissions ($\%R_{metal}$) is computed using the following formula:

$$(\%R_{metal}) = \left(\frac{E_i - E_o}{E_i}\right) \times 100$$

Where:

$\%R_{metal}$=percentage reduction of metal emission (Pb, Cd, or Hg) achieved;

E_i=metal emission concentration (Pb, Cd, or Hg) measured at the control device inlet, corrected to 7 percent oxygen (dry basis); and

E_o=metal emission concentration (Pb, Cd, or Hg) measured at the control device outlet, corrected to 7 percent oxygen (dry basis).

(12) The EPA Reference Method 22 of appendix A of this part shall be used to determine compliance with the fugitive ash emission limit under § 60.52c(c). The minimum observation time shall be a series of three 1-hour observations.

(c) Following the date on which the initial performance test is completed or is required to be completed under § 60.8, whichever date comes first, the owner or operator of an affected facility shall:

(1) Determine compliance with the opacity limit by conducting an annual performance test (no more than 12 months following the previous performance test) using the applicable procedures and test methods listed in paragraph (b) of this section.

(2) Determine compliance with the PM, CO, and HCl emission limits by conducting an annual performance test (no more than 12 months following the previous performance test) using the applicable procedures and test methods listed in paragraph (b) of this section. If all three performance tests over a 3-year period indicate compliance with the emission limit for a pollutant (PM, CO, or HCl), the owner or operator may forego a performance test for that pollutant for the subsequent 2 years. At a minimum, a performance test for PM, CO, and HCl shall be conducted every third year (no more than 36 months following the previous performance test). If a performance test conducted

every third year indicates compliance with the emission limit for a pollutant (PM, CO, or HCl), the owner or operator may forego a performance test for that pollutant for an additional 2 years. If any performance test indicates noncompliance with the respective emission limit, a performance test for that pollutant shall be conducted annually until all annual performance tests over a 3-year period indicate compliance with the emission limit. The use of the bypass stack during a performance test shall invalidate the performance test.

(3) For large HMIWI, determine compliance with the visible emission limits for fugitive emissions from flyash/bottom ash storage and handling by conducting a performance test using EPA Reference Method 22 on an annual basis (no more than 12 months following the previous performance test).

(4) Facilities using a CEMS to demonstrate compliance with any of the emission limits under § 60.52c shall:

(i) Determine compliance with the appropriate emission limit(s) using a 12-hour rolling average, calculated each hour as the average of the previous 12 operating hours (not including startup, shutdown, or malfunction).

(ii) Operate all CEMS in accordance with the applicable procedures under appendices B and F of this part.

(d) The owner or operator of an affected facility equipped with a dry scrubber followed by a fabric filter, a wet scrubber, or a dry scrubber followed by a fabric filter and wet scrubber shall:

(1) Establish the appropriate maximum and minimum operating parameters, indicated in Table 3 of this subpart for each control system, as site specific operating parameters during the initial performance test to determine compliance with the emission limits; and

(2) Following the date on which the initial performance test is completed or is required to be completed under § 60.8, whichever date comes first, ensure that the affected facility does not operate above any of the applicable maximum operating parameters or below any of the applicable minimum operating parameters listed in Table 3 of this subpart and measured as 3-hour rolling averages (calculated each hour as the average of the previous 3 operating hours) at all times except during periods of startup, shutdown and malfunction. Operating parameter limits do not apply during performance tests. Operation above the established maximum or below the established minimum operating parameter(s) shall constitute a violation of established operating parameter(s).

(e) Except as provided in paragraph (h) of this section, for affected facilities equipped with a dry scrubber followed by a fabric filter:

(1) Operation of the affected facility above the maximum charge rate and below the minimum secondary chamber temperature (each measured on a 3-hour rolling average) simultaneously shall constitute a violation of the CO emission limit.

(2) Operation of the affected facility above the maximum fabric filter inlet temperature, above the maximum charge rate, and below the minimum dioxin/furan sorbent flow rate (each measured on a 3-hour rolling average) simultaneously shall constitute a violation of the dioxin/furan emission limit.

(3) Operation of the affected facility above the maximum charge rate and below the minimum HCl sorbent flow rate (each measured on a 3-hour rolling average) simultaneously shall constitute a violation of the HCl emission limit.

(4) Operation of the affected facility above the maximum charge rate and below the minimum Hg sorbent flow rate (each measured on a 3-hour rolling average) simultaneously shall constitute a violation of the Hg emission limit.

(5) Use of the bypass stack (except during startup, shutdown, or malfunction) shall constitute a violation of the PM, dioxin/furan, HCl, Pb, Cd and Hg emission limits.

(f) Except as provided in paragraph (h) of this section, for affected facilities equipped with a wet scrubber:

(1) Operation of the affected facility above the maximum charge rate and below the minimum pressure drop across the wet scrubber or below the minimum horsepower or amperage to the system (each measured on a 3-hour rolling average) simultaneously shall constitute a violation of the PM emission limit.

(2) Operation of the affected facility above the maximum charge rate and below the minimum secondary chamber temperature (each measured on a 3-hour rolling average) simultaneously shall constitute a violation of the CO emission limit.

(3) Operation of the affected facility above the maximum charge rate, below the minimum secondary chamber temperature, and below the minimum scrubber liquor flow rate (each measured on a 3-hour rolling average) simultaneously shall constitute a violation of the dioxin/furan emission limit.

(4) Operation of the affected facility above the maximum charge rate and below the minimum scrubber liquor pH (each measured on a 3-hour rolling average) simultaneously shall constitute a violation of the HCl emission limit.

(5) Operation of the affected facility above the maximum flue gas temperature and above the maximum charge rate (each measured on a 3-hour rolling average) simultaneously shall constitute a violation of the Hg emission limit.

(6) Use of the bypass stack (except during startup, shutdown, or malfunction) shall constitute a violation of the PM, dioxin/furan, HCl, Pb, Cd and Hg emission limits.

(g) Except as provided in paragraph (h) of this section, for affected facilities equipped with a dry scrubber followed by a fabric filter and a wet scrubber:

(1) Operation of the affected facility above the maximum charge rate and below the minimum secondary chamber temperature (each measured on a 3-hour rolling average) simultaneously shall constitute a violation of the CO emission limit.

(2) Operation of the affected facility above the maximum fabric filter inlet temperature, above the maximum charge rate, and below the minimum dioxin/furan sorbent flow rate (each measured on a 3-hour rolling average) simultaneously shall constitute a violation of the dioxin/furan emission limit.

(3) Operation of the affected facility above the maximum charge rate and below the minimum scrubber liquor pH (each measured on a 3-hour rolling average) simultaneously shall constitute a violation of the HCl emission limit.

(4) Operation of the affected facility above the maximum charge rate and below the minimum Hg sorbent flow rate (each measured on a 3-hour rolling average) simultaneously shall constitute a violation of the Hg emission limit.

(5) Use of the bypass stack (except during startup, shutdown, or malfunction) shall constitute a violation of the PM, dioxin/furan, HCl, Pb, Cd and Hg emission limits.

(h) The owner or operator of an affected facility may conduct a repeat performance test within 30 days of violation of applicable operating parameter(s) to demonstrate that the affected facility is not in violation of the applicable emission limit(s). Repeat performance tests conducted pursuant to this paragraph shall be conducted using the identical operating parameters that indicated a violation under paragraph (e), (f), or (g) of this section.

(i) The owner or operator of an affected facility using an air pollution control device other than a dry scrubber followed by a fabric filter, a wet

scrubber, or a dry scrubber followed by a fabric filter and a wet scrubber to comply with the emission limits under § 60.52c shall petition the Administrator for other site-specific operating parameters to be established during the initial performance test and continuously monitored thereafter. The owner or operator shall not conduct the initial performance test until after the petition has been approved by the Administrator.

(j) The owner or operator of an affected facility may conduct a repeat performance test at any time to establish new values for the operating parameters. The Administrator may request a repeat performance test at any time.

§ 60.57c Monitoring requirements.

(a) The owner or operator of an affected facility shall install, calibrate (to manufacturers' specifications), maintain, and operate devices (or establish methods) for monitoring the applicable maximum and minimum operating parameters listed in Table 3 of this subpart such that these devices (or methods) measure and record values for these operating parameters at the frequencies indicated in Table 3 of this subpart at all times except during periods of startup and shutdown.

(b) The owner or operator of an affected facility shall install, calibrate (to manufacturers' specifications), maintain, and operate a device or method for measuring the use of the bypass stack including date, time, and duration.

(c) The owner or operator of an affected facility using something other than a dry scrubber followed by a fabric filter, a wet scrubber, or a dry scrubber followed by a fabric filter and a wet scrubber to comply with the emission limits under § 60.52c shall install, calibrate (to the manufacturers' specifications), maintain, and operate the equipment necessary to monitor the site-specific operating parameters developed pursuant to § 60.56c(i).

(d) The owner or operator of an affected facility shall obtain monitoring data at all times during HMIWI operation except during periods of monitoring equipment malfunction, calibration, or repair. At a minimum, valid monitoring data shall be obtained for 75 percent of the operating hours per day and for 90 percent of the operating days per calendar quarter that the affected facility is combusting hospital waste and/or medical/infectious waste.

§ 60.58c Reporting and recordkeeping requirements.

(a) The owner or operator of an affected facility shall submit notifications, as provided by § 60.7. In addition, the owner or operator shall submit the following information:

(1) Prior to commencement of construction;

(i) A statement of intent to construct;

(ii) The anticipated date of commencement of construction; and

(iii) All documentation produced as a result of the siting requirements of § 60.54c.

(2) Prior to initial startup;

(i) The type(s) of waste to be combusted;

(ii) The maximum design waste burning capacity;

(iii) The anticipated maximum charge rate; and

(iv) If applicable, the petition for site-specific operating parameters under § 60.56c(i).

(b) The owner or operator of an affected facility shall maintain the following information (as applicable) for a period of at least 5 years:

(1) Calendar date of each record;

(2) Records of the following data:

(i) Concentrations of any pollutant listed in § 60.52c or measurements of opacity as determined by the continuous emission monitoring system (if applicable);

(ii) Results of fugitive emissions (by EPA Reference Method 22) tests, if applicable;

(iii) HMIWI charge dates, times, and weights and hourly charge rates;

(iv) Fabric filter inlet temperatures during each minute of operation, as applicable;

(v) Amount and type of dioxin/furan sorbent used during each hour of operation, as applicable;

(vi) Amount and type of Hg sorbent used during each hour of operation, as applicable;

(vii) Amount and type of HCl sorbent used during each hour of operation, as applicable;

(viii) Secondary chamber temperatures recorded during each minute of operation;

(ix) Liquor flow rate to the wet scrubber inlet during each minute of operation, as applicable;

(x) Horsepower or amperage to the wet scrubber during each minute of operation, as applicable;

(xi) Pressure drop across the wet scrubber system during each minute of operation, as applicable,

(xii) Temperature at the outlet from the wet scrubber during each minute of operation, as applicable;

(xiii) pH at the inlet to the wet scrubber during each minute of operation, as applicable,

(xiv) Records indicating use of the bypass stack, including dates, times, and durations, and

(xv) For affected facilities complying with §§ 60.56c(i) and 60.57c(c), the owner or operator shall maintain all operating parameter data collected.

(3) Identification of calendar days for which data on emission rates or operating parameters specified under paragraph (b)(2) of this section have not been obtained, with an identification of the emission rates or operating parameters not measured, reasons for not obtaining the data, and a description of corrective actions taken.

(4) Identification of calendar days, times and durations of malfunctions, a description of the malfunction and the corrective action taken.

(5) Identification of calendar days for which data on emission rates or operating parameters specified under paragraph (b)(2) of this section exceeded the applicable limits, with a description of the exceedances, reasons for such exceedances, and a description of corrective actions taken.

(6) The results of the initial, annual, and any subsequent performance tests conducted to determine compliance with the emission limits and/or to establish operating parameters, as applicable.

(7) All documentation produced as a result of the siting requirements of § 60.54c;

(8) Records showing the names of HMIWI operators who have completed review of the information in § 60.53c(h) as required by § 60.53c(i), including the date of the initial review and all subsequent annual reviews;

(9) Records showing the names of the HMIWI operators who have completed the operator training requirements, including documentation of training and the dates of the training;

(10) Records showing the names of the HMIWI operators who have met the criteria for qualification under § 60.53c and the dates of their qualification; and

(11) Records of calibration of any monitoring devices as required under § 60.57c(a), (b), and (c).

(c) The owner or operator of an affected facility shall submit the information specified in paragraphs (c)(1) through (c)(3) of this section no later than 60 days following the initial performance test. All reports shall be signed by the facilities manager.

(1) The initial performance test data as recorded under § 60.56c(b)(1) through (b)(12), as applicable.

(2) The values for the site-specific operating parameters established pursuant to § 60.56c(d) or (i), as applicable.

(3) The waste management plan as specified in § 60.55c.

(d) An annual report shall be submitted 1 year following the submission of the information in paragraph (c) of this section and subsequent reports shall be submitted no more than 12 months following the previous report (once the unit is subject to permitting requirements under Title V of the Clean Air Act, the owner or operator of an affected facility must submit these reports semiannually). The annual report shall include the information specified in paragraphs (d)(1) through (d)(8) of this section. All reports shall be signed by the facilities manager.

(1) The values for the site-specific operating parameters established pursuant to § 60.56c(d) or (i), as applicable.

(2) The highest maximum operating parameter and the lowest minimum operating parameter, as applicable, for each operating parameter recorded for the calendar year being reported, pursuant to § 60.56c(d) or (i), as applicable.

(3) The highest maximum operating parameter and the lowest minimum operating parameter, as applicable for each operating parameter recorded pursuant to § 60.56c(d) or (i) for the calendar year preceding the year being reported, in order to provide the Administrator with a summary of the performance of the affected facility over a 2-year period.

(4) Any information recorded under paragraphs (b)(3) through (b)(5) of this section for the calendar year being reported.

(5) Any information recorded under paragraphs (b)(3) through (b)(5) of this section for the calendar year preceding the year being reported, in order to provide the Administrator with a summary of the performance of the affected facility over a 2-year period.

(6) If a performance test was conducted during the reporting period, the results of that test.

(7) If no exceedances or malfunctions were reported under paragraphs (b)(3) through (b)(5) of this section for the calendar year being reported, a statement that no exceedances occurred during the reporting period.

(8) Any use of the bypass stack, the duration, reason for malfunction, and corrective action taken.

(e) The owner or operator of an affected facility shall submit semiannual reports containing any information recorded under paragraphs (b)(3) through (b)(5) of this section no later than 60 days following the reporting period. The first semiannual reporting period ends 6 months following the submission of information in paragraph (c) of this section. Subsequent reports shall be submitted no later than 6 calendar months following the previous report. All reports shall be signed by the facilities manager.

(f) All records specified under paragraph (b) of this section shall be maintained onsite in either paper copy or computer-readable format, unless an alternative format is approved by the Administrator.

TABLE 1 TO SUBPART EC.—EMISSION LIMITS FOR SMALL, MEDIUM, AND LARGE HMIWI

Pollutant	Units (7 percent oxygen, dry basis)	Emission limits		
		HMIWI size		
		Small	Medium	Large
Particulate matter	Milligrams per dry standard cubic meter (grains per dry standard cubic foot).	69 (0.03)	34 (0.015)	34 (0.015).
Carbon monoxide	Parts per million by volume	40	40	40.
Dioxins/furans	Nanograms per dry standard cubic meter total dioxins/furans (grains per billion dry standard cubic feet) or nanograms per dry standard cubic meter total dioxins/furans TEQ (grains per billion dry standard cubic feet).	125 (55) or 2.3 (1.0)	25 (11) or 0.6 (0.26)	25 (11) or 0.6 (0.26).
Hydrogen chloride	Parts per million or percent reduction	15 or 99%	15 or 99%	15 or 99%.
Sulfur dioxide	Parts per million by volume	55	55	55.
Nitrogen oxides	Parts per million by volume	250	250	250.
Lead	Milligrams per dry standard cubic meter (grains per thousand dry standard cubic feet) or percent reduction.	1.2 (0.52) or 70%	0.07 (0.03) or 98%	0.07 (0.03) or 98%.
Cadmium	Milligrams per dry standard cubic meter (grains per thousand dry standard cubic feet) or percent reduction.	0.16 (0.07) or 65%	0.04 (0.02) or 90%	0.04 (0.02) or 90%.
Mercury	Milligrams per dry standard cubic meter (grains per thousand dry standard cubic feet) or percent reduction.	0.55 (0.24) or 85%	0.55 (0.24) or 85%	0.55 (0.24) or 85%.

TABLE 2 TO SUPBART EC.—TOXIC EQUIVALENCY FACTORS

Dioxin/furan congener	Toxic equivalency factor
2,3,7,8-tetrachlorinated dibenzo-p-dioxin	1
1,2,3,7,8-pentachlorinated dibenzo-p-dioxin	0.5
1,2,3,4,7,8-hexachlorinated dibenzo-p-dioxin	0.1
1,2,3,7,8,9-hexachlorinated dibenzo-p-dioxin	0.1
1,2,3,6,7,8-hexachlorinated dibenzo-p-dioxin	0.1
1,2,3,4,6,7,8-heptachlorinated dibenzo-p-dioxin	0.01
octachlorinated dibenzo-p-dioxin	0.001
2,3,7,8-tetrachlorinated dibenzofuran	0.1
2,3,4,7,8-pentachlorinated dibenzofuran	0.5
1,2,3,7,8-pentachlorinated dibenzofuran	0.05

TABLE 2 TO SUPBART EC.—TOXIC EQUIVALENCY FACTORS—Continued

Dioxin/furan congener	Toxic equivalency factor
1,2,3,4,7,8-hexachlorinated dibenzofuran	0.1
1,2,3,6,7,8-hexachlorinated dibenzofuran	0.1
1,2,3,7,8,9-hexachlorinated dibenzofuran	0.1
2,3,4,6,7,8-hexachlorinated dibenzofuran	0.1
1,2,3,4,6,7,8-heptachlorinated dibenzofuran	0.01
1,2,3,4,7,8,9-heptachlorinated dibenzofuran	0.01
Octachlorinated dibenzofuran	0.001

TABLE 3 TO SUBPART EC.—OPERATING PARAMETERS TO BE MONITORED AND MINIMUM MEASUREMENT AND RECORDING FREQUENCIES

Operating parameters to be monitored	Minimum frequency		Control system		
	Data measurement	Data recording	Dry scrubber followed by fabric filter	Wet scrubber	Dry scrubber followed by fabric filter and wet scrubber
Maximum operating parameters:					
Maximum charge rate	Continuous	1×hour	✔	✔	✔
Maximum fabric filter inlet temperature	Continuous	1×minute	✔		✔
Maximum flue gas temperature	Continuous	1×minute	✔	✔	
Minimum operating parameters:					
Minimum secondary chamber temperature	Continuous	1×minute	✔	✔	✔
Minimum dioxin/furan sorbent flow rate	Hourly	1×hour	✔		✔
Minimum HCl sorbent flow rate	Hourly	1×hour	✔		✔
Minimum mercury (Hg) sorbent flow rate	Hourly	1×hour	✔		✔
Minimum pressure drop across the wet scrubber or minimum horsepower or amperage to wet scrubber.	Continuous	1×minute		✔	✔
Minimum scrubber liquor flow rate	Continuous	1×minute		✔	✔
Minimum scrubber liquor pH	Continuous	1×minute		✔	✔

[FR Doc. 97–23835 Filed 9–12–97; 8:45 am]

BILLING CODE 6560–50–P

federal register

Monday
September 15, 1997

Part III

Environmental Protection Agency

40 CFR Part 136

Guidelines Establishing Test Procedures for the Analysis of Pollutants; EPA Method 1613; Final Rule

ENVIRONMENTAL PROTECTION AGENCY

40 CFR Part 136

[FRL–5889–3]

RIN 2040–AC64

Guidelines Establishing Test Procedures for the Analysis of Pollutants; EPA Method 1613

AGENCY: Environmental Protection Agency (EPA).

ACTION: Final rule.

SUMMARY: Today's final regulation amends the ''Guidelines Establishing Test Procedures for the Analysis of Pollutants'' under section 304(h) of the Clean Water Act to approve EPA Method 1613 for determination of tetra- through octa-chlorinated, 2,3,7,8-substituted, dibenzo-*p*-dioxins and dibenzofurans (CDDs/CDFs) by high resolution gas chromatography (HRGC) coupled with high resolution mass spectrometry (HRMS). This regulation makes available at 40 CFR part 136 an additional, more sensitive test procedure for CDDs/CDFs. Method 1613 is the most sensitive analytical test procedure approved under the Clean Water Act for the analysis of CDDs/CDFs because it measures into the low part-per-quadrillion (ppq) range. Use of approved test procedures is required whenever the discharge constituent specified is required to be measured for: a National Pollutant Discharge Elimination System (NPDES) permit application; discharge monitoring reports; state certification; and other requests from the permitting authority for quantitative or qualitative effluent data. Use of approved test procedures also is required for the expression of pollutant amounts, characteristics, or properties in effluent limitations guidelines and standards of performance and pretreatment standards, unless otherwise specifically noted or defined.

EFFECTIVE DATE: This regulation is effective October 15, 1997. In accordance with 40 CFR 23.2, this rule shall be considered issued for the purposes of judicial review September 29, 1997, at 1 p.m. eastern daylight time. Under section 509(b)(1) of the Clean Water Act, judicial review of these amendments can be obtained only by filing a petition for review in the United States Court of Appeals within 120 days after they are considered issued for the purposes of judicial review. Under section 509(b)(2) of the Clean Water Act, the requirements of these amendments may not be challenged later in civil or criminal proceedings to enforce these requirements.

ADDRESSES: Documents that support this final rule are in the Water Docket and are available for public inspection from 9 a.m. to 4 p.m. in Room M2616, 401 M Street, SW., Washington, D.C. 20460, phone: (202) 260–3027. The Docket staff request that interested parties call for an appointment before visiting the Docket. The EPA regulations at 40 CFR Part 2 provide that a reasonable fee may be charged for copying.

FOR FURTHER INFORMATION CONTACT: Mr. Ben Honaker at (202) 260–2272, USEPA Office of Science and Technology, Engineering and Analysis Division (4303), 401 M Street, SW., Washington, DC 20460.

SUPPLEMENTARY INFORMATION:

Regulated Entities

This action approves a test procedure for the determination of tetra- through octa-chlorinated, 2,3,7,8-substituted, CDDs/CDFs in wastewater by HRGC/HRMS. Regulatory authorities may, at their discretion, require use of this method in NPDES permits. Entities potentially regulated by this action are listed in the table below.

Category	Examples of regulated entities
Public ...	Government laboratories that develop or employ analytical methods for use in demonstrating compliance with the CWA.
Private ..	Commercial laboratories, consensus methods organizations, instrument manufacturers, vendors, and other entities that develop or employ analytical methods for use in demonstrating compliance with the CWA.

This table is not intended to be exhaustive, but rather provides a guide for readers regarding entities likely to be regulated by this action. This table lists the types of entities that EPA is now aware could potentially be regulated by this action. Other types of entities not listed in the table could also be regulated. To determine whether your organization is regulated by this action, you should carefully examine the applicability language of today's rule at § 136.3. If you have questions regarding the applicability of this action to a particular entity, consult the person listed in the preceding **FOR FURTHER INFORMATION CONTACT** section.

Outline of Preamble

I. Authority
II. Background and History
A. Analytical Methods Under 40 CFR Part 136, Including Method 1613
B. Promulgation of Method 1613 Under EPA's Drinking Water Rules
C. Proposal of Method 1613 for Monitoring in Pulp, Paper, and Paperboard Industry Wastewaters
III. Summary of the Final Rule Amending Part 136
A. Purpose
B. Summary of Improvements Since Proposal
1. Development of Improved Quality Control Acceptance Criteria
(a) Interlaboratory Method Validation Study
(i) Simulated Sample Extracts
(ii) Sample Processing
(iii) Data Submission by Laboratories
(b) Data from the Pulp and Paper Long-term Variability Study
(c) Statistical Analysis
2. Procedures for Fish and Other Tissues
(a) Extraction Procedures
(i) Dehydration and Soxhlet Extraction
(ii) Hydrochloric Acid Digestion and Extraction
(b) Bulk Lipid Removal Procedures for Soxhlet Extracts
(i) Anthropogenic Isolation Column
(ii) Acidified Silica Gel
(c) Sulfuric Acid Back-extraction for HCl-digested Extracts
(d) Further Cleanup of Tissue Extracts
3. Solid-phase Extraction of Aqueous Samples
4. Sample Preservation and Holding Times
5. Other Improvements
C. Method Detection Limit (MDL) Studies
IV. Public Participation and Response to Comments
A. Duplication of Methods
B. Method Flexibility
C. Feasibility-Instrumentation and Cost Issues
1. Waste
2. Instrumentation
D. Insufficient Validation-General Comments
E. Insufficient Validation of the Matrices Specified in the **Federal Register** Document
F. Interlaboratory Study
G. Method Detection Limit Studies
H. Detection/Quantitation Levels
I. Quality Assurance/Quality Control (QA/QC)
J. Miscellaneous
K. Technical Comments
V. Regulatory Analysis
A. Executive Order 12866
B. Unfunded Mandates Reform Act
C. Regulatory Flexibility Act
D. Paperwork Reduction Act
E. Submission to Congress and the General Accounting Office

I. Authority

Today's final rule is promulgated under the authority of sections 301, 304(h), 307, 308 and 501(a) of the Clean Water Act (CWA), 33 U.S.C. 1251 *et seq.* (the Federal Water Pollution Control Act Amendments of 1972 as amended by the Clean Water Act of 1977 and the Water Quality Act of 1987), 33 U.S.C. 1311, 1314(h), 1328, 1329, 1361(a); 86 Stat.

816, Pub. L. 92-500; 91 Stat. 1567, Pub. L. 95–217; 100 Stat. 7, Pub. L. 100–4 (the ''Act''). Section 301 of the Act prohibits the discharge of any pollutant into navigable waters unless the discharge complies with an NPDES permit issued under section 402 of the Act. Section 301 also specifies levels of pollutant reductions to be achieved by certain dates. Section 304(h) of the Act requires the EPA Administrator to ''promulgate guidelines establishing test procedures for the analysis of pollutants that shall include the factors which must be provided in any certification pursuant to section 401 of this Act or permit applications pursuant to section 402 of this Act.'' These test procedures for the analysis of pollutants also assist in the implementation of section 301. Section 501(a) of the Act authorizes the Administrator to prescribe such regulations as are necessary to carry out her function under the Act.

The Administrator has also made these test procedures (methods) applicable to monitoring and reporting of NPDES permit applications and permits (40 CFR part 122, §§ 122.21, 122.41, 122.44, 122.48, and 123.25), and implementation of the pretreatment standards issued under section 307 of CWA (40 CFR part 403, §§ 403.10 and 402.12).

II. Background and History

A. Analytical Methods Under 40 CFR Part 136, Including Method 1613

The Agency provided a history of analytical methods under 40 CFR part 136 on February 7, 1991 (56 FR 5090) when EPA proposed the rule being promulgated today. The preamble to today's final rule updates that history with technical changes to EPA Method 1613 between proposal and promulgation. These technical changes are described below in Section III.B., ''Summary of Improvements Since Proposal.''

B. Promulgation of Method 1613 Under EPA's Drinking Water Rules

Under the Safe Drinking Water Act, EPA proposed Method 1613 for the measurement of 2,3,7,8-tetrachlorodibenzo-p-dioxin (TCDD), also known as dioxin, in support of the National Primary Drinking Water Regulation for that contaminant. See 55 FR 30426 (July 25, 1990). EPA also discussed plans to conduct an interlaboratory method validation study to determine whether the detection and quantitation values derived by EPA for Method 1613 represented a reasonable expectation for different laboratories. EPA solicited comments on the appropriate level to be used to set the maximum contaminant level (MCL) for the drinking water rule. EPA further discussed Method 1613 for determination of dioxin in drinking water in a ''Notice of Availability with Request for Comment'' on November 29, 1991, at 56 FR 60949.

On December 5, 1994, EPA promulgated Method 1613 for measurement of dioxin in drinking water at 40 CFR parts 141 and 142 (59 FR 62455). In section I.B.3.b of the preamble to that rulemaking, EPA responded to general and specific comments on the application of EPA Method 1613 to drinking water. EPA stated in the preamble that the Agency had previously solicited and received comments on the proposal of Method 1613 for application to wastewater, that some of these same comments had been received in response to the proposal of Method 1613 for application to drinking water, and that EPA would restrict its responses to general issues covering the application of Method 1613 to both drinking water and wastewater and to issues specific to drinking water. In today's preamble, EPA is responding to all comments received on the proposal of Method 1613 for application to wastewater (56 FR 5090), including general comments that were duplicated in comments received on the drinking water notice (56 FR 60949).

The December 5, 1994, revision to Method 1613 (for application to drinking water) is consistent with the version of the Method in today's rule. Therefore, with today's rulemaking, the same version of EPA Method 1613 applies to analysis of wastewater and drinking water.

C. Proposal of Method 1613 for Monitoring in Pulp, Paper, and Paperboard Industry Wastewaters

On December 17, 1993, EPA proposed national effluent limitations and guidelines, pretreatment standards, and new source performance standards for the Pulp, Paper, and Paperboard industrial point source category. *See* 58 FR 66078. In the proposal, EPA referenced a compendium titled ''Analytical Methods for the Determination of Pollutants in Pulp and Paper Industry Wastewater.'' This compendium contained methods that had not been promulgated at 40 CFR part 136, but would be applicable for monitoring compliance with the numerical limitations and standards proposed in the Pulp, Paper, and Paperboard rule. These methods were proposed for promulgation at 40 CFR part 430 to support the proposed regulation and were included in the docket for the proposed pulp and paper rule.

The methods proposed for monitoring under the proposed pulp and paper rule included an earlier version of Method 1613 than the version EPA is promulgating today. To further conform analytical methods, NPDES permits issued after the effective date of today's rule will require use of today's promulgated revision of Method 1613 for determining compliance with the final rule for the Pulp, Paper, and Paperboard category.

III. Summary of the Final Rule Amending Part 136

A. Purpose

This rule allows the use of Method 1613 for determination of seventeen tetra-through octa-chlorinated, 2,3,7,8-substituted dibenzo-p-dioxins and dibenzofurans (CDDs/CDFs) in effluent samples by isotope dilution high resolution gas chromatography (HRGC) combined with high resolution mass spectrometry (HRMS). Method 1613 was developed to lower the measurable range of minimum levels for the CDDs/CDFs, specifically, into the low part per quadrillion (ppq) range for aqueous samples and into the low part-per-trillion (ppt) range for solid and semi-solid sample matrices. EPA believes Method 1613 is adequate and applicable for the measurement of solid and semi-solid sample matrices, such as biosolids and fish tissue, but today's rule does not amend test procedures for sewage sludge regulations at 40 CFR 503.8 and does not constitute rulemaking for measurement of fish tissue. Today's rulemaking at 40 CFR part 136 applies for measurement of aqueous samples.

The promulgation of Method 1613 provides a test procedure (analytical method) for compliance monitoring under the National Pollutant Discharge Elimination System (CWA section 402) and CWA section 401 certifications. Method 1613 is also available for: Development of and monitoring compliance with effluent limitations guidelines, pretreatment standards, and new source performance standards in EPA's water programs; ambient water quality monitoring; and general laboratory use. By today's action, however, EPA is not withdrawing approval of the existing method, Method 613, which also measures 2,3,7,8–TCDD , albeit with limited sensitivity. Method 613 is still applicable for those NPDES permits that require that this method be used and thus existing permits do not need to be modified prior to expiration. In addition, Method 613 remains available

for screening purposes. However, NPDES permits issued after promulgation of today's rule must include Method 1613 if the permit contains effluent limitations for dioxin.

B. Summary of Improvements Since Proposal

EPA proposed Method 1613 on February 7, 1991. *See* 56 FR 5090. At the time of proposal, EPA had initiated (but had not completed) an Interlaboratory Method Validation Study (IMVS) and was considering other improvements to Method 1613 to increase the utility of the Method and make the Method more efficient and cost-effective. EPA proceeded with proposal of Method 1613 before completion of the IMVS because:

- Method 1613 had been validated in single-laboratory studies and in data gathering by EPA. The data gathering consisted of over 500 analyses of real-world environmental samples to support regulation development in EPA's effluent guidelines and other programs.
- EPA desired to make Method 1613 available for reporting of CDDs/CDFs under the NPDES permit regulations at 40 CFR parts 122 and 123, and the pretreatment regulations at 40 CFR part 403. At that time, the only method approved for the determination of 2,3,7,8-tetrachlorodibenzo-p-dioxin (2,3,7,8-TCDD) under 40 CFR part 136 was Method 613. Method 613 is 200 times less sensitive than Method 1613 for 2,3,7,8-TCDD and does not measure other CDDs/CDFs.
- EPA was developing regulations for the Pulp, Paper, and Paperboard industrial category. A high sensitivity method for 2,3,7,8-TCDD and 2,3,7,8-tetrachlorodibenzofuran (2,3,7,8-TCDF) was required for development of these regulations.
- EPA desired to collect comments on proposed Method 1613 to improve the Method and learn of deficiencies that needed to be addressed before promulgation.

Since proposal, EPA has received a considerable number of suggestions on improving the utility of Method 1613, both as described below in Section IV, ''Public Participation and Response to Comments,'' and in technical meetings and informal and formal discussions with laboratories, academicians, and the regulated industry. Based on the IMVS and these discussions, EPA has made technical revisions to Method 1613 to improve the usability of the method for water and other sample matrices. This section of the preamble describes how EPA developed some of these improvements in response to public comment.

1. Development of Improved Quality Control Acceptance Criteria

As proposed, Method 1613 contained performance specifications in the form of quality control (QC) acceptance criteria that were based upon data gathered by EPA during the development of Method 1613 between 1988 and 1991. EPA developed improved QC acceptance criteria using data from EPA's IMVS and data from the paper industry and EPA's Pulp and Paper Long-term Variability Study (LTVS). EPA has revised the QC acceptance criteria in the version of Method 1613 being promulgated today. The IMVS and LTVS studies are described below. A more detailed description of the IMVS and development of the revised QC acceptance criteria is given in the report titled ''Results of the International Interlaboratory Validation Study of USEPA Method 1613'' (1613 Report). The 1613 Report is included in the docket for today's final rule.

(a) Interlaboratory Method Validation Study. In February 1990, EPA began its interlaboratory validation of Method 1613 for the determination of CDDs/CDFs by HRGC/HRMS. The study was international in scope, ultimately involving receipt of data from 20 laboratories in five countries. The purpose of the study was to further characterize Method 1613 and to gather additional data to support today's promulgation.

Details of the IMVS study design are given in the ''Study Plan for the Evaluation of Method 1613'' (Study Plan). The Study Plan was included in the docket at proposal, and the results of the study are summarized in the 1613 Report included in the docket for this final rule. The pertinent specifics of the IMVS are summarized below.

(i) Simulated Sample Extracts

Each laboratory participating in the IMVS received two concentrated extracts prepared from a large-volume sample of industrial wastewater. This large-volume sample was extracted with benzene, and the benzene extract was concentrated. The concentrate was highly colored and contained small amounts of solids derived from the bulk extraction of the original sample.

The extract concentrate was split into three portions: low, medium, and high. The low concentration extract was not fortified with any additional CDDs/CDFs, and contained 2,3,7,8-TCDD and 2,3,7,8-TCDF at approximately 60 and 300 ppq, respectively. The medium extract was fortified with most of the CDDs/CDFs not already present at concentrations in the 100- to 500-ppq range. The high extract was fortified with most of the CDDs/CDFs in the 250- to 1000-ppq range. After spiking, each of the three portions was further split and sealed into glass ampules.

Two ampules of the same concentration were submitted to each laboratory as a single blind duplicate sample, i.e., the laboratory did not know which, if any, CDDs/CDFs were in the ampules and did not know the concentrations of the CDDs/CDFs that were present in the ampules. The ampules were shipped to the laboratories over a period of four months, as additional participants joined the study.

The study design formed an incomplete block, i.e., not all laboratories were sent each of the three different concentrates. Under the incomplete block design used in this study, eight laboratories were sent two low-concentration ampules each, seven laboratories were sent two medium-concentration samples each, and the seven remaining laboratories were sent two high-concentration ampules each. At each laboratory, each concentrate was withdrawn from its ampule, further concentrated, and solvent-exchanged to acetone to ensure that the extract would be water miscible. Each acetone solution was then spiked into a one-liter volume of reagent water to produce a simulated effluent sample.

(ii) Sample Processing

Each simulated effluent sample was processed through the sample extraction procedure in the proposed version of Method 1613. Although all but one of the laboratories were experienced in performing CDD/CDF analyses using HRGC/HRMS, less than one-third of the 22 laboratories had direct experience with Method 1613. Therefore, laboratories were given time to familiarize themselves with the details of the Method, and each laboratory was required to demonstrate its general proficiency with the Method through the analysis of four initial precision and recovery (IPR) aliquots, as described in the Method.

In addition to demonstrating method proficiency and analyzing the simulated effluent samples according to Method 1613, the participating laboratories were required to perform all other QC procedures described in the Method. These QC requirements were described in Section III.D. of the proposal (56 FR 5092–5093).

For each sample and quality control analysis, the laboratories were to

provide the concentration of each analyte detected and the recovery of each labeled standard. All supporting raw data, including selected ion current profiles, were to be reported for all analyses.

(iii) Data Submission by Laboratories

A total of 22 laboratories in 6 countries agreed to participate in the study on a voluntary basis. The list of laboratories is given in the 1613 Report. After two years, data were received from a total of 20 laboratories in 5 countries. Data from each laboratory were reviewed thoroughly and, after resolution of data problems with the laboratories, the data were entered into a data set and combined with data from the LTVS to construct the final QC acceptance criteria for Method 1613 being promulgated today. EPA wishes to publicly thank the laboratories that participated in the study, particularly those that took the time to submit additional data and suggestions for improvement of Method 1613.

(b) Data from the Pulp and Paper Long-term Variability Study. Data gathering in the LTVS is described in detail in Section 7.5.2 of the Technical Support Document for the rule proposed for the Pulp, Paper, and Paperboard category (58 FR 66078). The procedures for validation of these data were developed in discussions between EPA and representatives of the paper industry. These validation procedures included detailed examination of all QC data associated with each field sample result. Specifically, the QC data were used to determine if the field sample results should be included in or excluded from the LTVS database that was used during development of the proposed pulp and paper industry effluent limitations guidelines and standards. Both the QC and the field sample data were maintained by EPA in a separate database intended for method development purposes. This included QC data for Method 1613, which were used to develop the final QC acceptance criteria in the version of the Method being promulgated today. The statistical procedures used to develop these final acceptance criteria are summarized below.

(c) Statistical Analysis. QC limits were calculated by constructing statistical prediction intervals for future observations of a quantity of interest using statistical estimates from data from the IMVS and LTVS. The statistical methods used are the same as those used to develop QC limits for EPA Method 1625 (49 FR 43234).

In other EPA method validation studies, compound-specific performance specifications usually have been determined at individual test levels with a probability of 0.05 (i.e., based on 95 percent confidence limits for a single future observation). Using such specifications, each compound measured would have a five percent chance of falling outside its QC limit. Because of the large number of compounds simultaneously tested in the quality control tests for Method 1613, it would be extremely likely that one or more criteria on each test would be failed simply by random chance if the tests were all performed at individual test levels of $p = .05$. It was deemed desirable, instead, to specify test limits such that the global test level (i.e., the chance of failing on any one or more of the CDDs/CDFs out of the whole list) was held to five percent. This was done by adjusting the significance level used on each compound such that the overall Type I error rate would be 0.05 for each test situation. Details of the binomial calculations for these considerations are given in appendix A to the 1613 Report.

QC acceptance criteria were developed for tests of calibration linearity, calibration verification (VER), precision of relative retention time (RRT), IPR, ongoing precision and recovery (OPR), and labeled compound recovery in field samples and blanks.

Separate QC acceptance criteria were developed for the instances in which 2,3,7,8-tetrachlorodibenzo-*p*-dioxin (TCDD) and 2,3,7,8-tetrachlorodibenzofuran (TCDF) are determined independently of the other CDDs/CDFs. The purpose of creating these separate criteria is to support those regulations, such as drinking water rules and the proposed rule for the Pulp, Paper, and Paperboard category, in which only TCDD and/or TCDF are regulated.

2. Procedures for Fish and Other Tissues

Procedures for the homogenization, preparation, extraction, and cleanup of fish and other tissues have been included in the revision of Method 1613 being promulgated today to increase the applicability of Method 1613 to these sample matrices. EPA is including these tissue extraction procedures based on tissue sample data gathered by EPA's Duluth laboratory, Dow Chemical Company, and commercial laboratories performing tests for EPA and other entities. See the docket for today's rule for references 21 through 28 cited in section 22.0 of Method 1613.

(a) Extraction Procedures. Two extraction procedures are in common use for the extraction of the CDDs/CDFs from tissue: Dehydration and Soxhlet Extraction, and Hydrochloric Acid Digestion and Extraction. Both of these procedures have been incorporated into the version of Method 1613 that is being promulgated today.

(i) Dehydration and Soxhlet Extraction

In this procedure, a 10-gram aliquot of homogenized tissue is mixed with powdered, anhydrous sodium sulfate and allowed to stand for 12–24 hours so that the sodium sulfate can adsorb most of the moisture in the tissue. After re-mixing, the tissue is placed in a Soxhlet extractor and extracted for 18–24 hours with methylene chloride:hexane (1:1). The organic extract containing the CDDs/CDFs and lipids is evaporated to dryness, and the lipid content of the residue is determined. The residue is dissolved in hexane and subjected to one of the two bulk lipid removal procedures associated with the Soxhlet extraction that are described below.

(ii) Hydrochloric Acid Digestion and Extraction

In this procedure, a 10-gram aliquot of homogenized tissue is digested with hydrochloric acid and simultaneously extracted with methylene chloride:hexane (1:1) in a glass bottle. The organic extract containing the CDDs/CDFs and lipids is decanted and evaporated to dryness, and the lipid content of the residue is determined. The residue is dissolved in hexane, and lipids are removed using the sulfuric acid back-extraction procedure described below.

(b) Bulk Lipid Removal Procedures for Soxhlet Extracts. Two procedures are in common use for removal of lipids from extracts produced by the Soxhlet extraction procedure. Both of these procedures have been incorporated into the version of Method 1613 that is being promulgated today.

(i) Anthropogenic Isolation Column

This column contains, in order from bottom to top, neutral silica gel, potassium silicate, anhydrous sodium sulfate, acid silica gel, and anhydrous sodium sulfate. The column is pre-eluted with hexane, and the extract from the Soxhlet extraction is placed on the column and eluted with 200 mL of hexane. Fats, lipids, and other materials are retained on the column while the CDDs/CDFs elute in the hexane.

(ii) Acidified Silica Gel

In this bulk cleanup procedure, 30–100 grams of acidified silica gel are stirred for 2-3 hours with the extract from the Soxhlet extraction. After stirring, the solution is filtered to remove the silica gel. Fats, lipids, and other materials are retained on the silica

gel while the CDDs/CDFs remain in solution in the hexane.

(c) Sulfuric Acid Back-extraction for HCl-digested Extracts. In this cleanup procedure, the re-dissolved residue from the hydrochloric acid digestion is back-extracted with concentrated sulfuric acid for a maximum exposure time of 45 seconds. The sulfuric acid severs the bonds in the lipidic material during this period but there is insufficient contact time for the acid to attack the CDDs/CDFs. After back-extraction with sulfuric acid, the extract is further back-extracted with potassium hydroxide solution to remove residual lipidic material and to neutralize any residual acid that may be present.

(d) Further Cleanup of Tissue Extracts. After each of the procedures for extraction and bulk cleanup described above, the extract is further cleaned up using any or all of the cleanup procedures in Method 1613. For further cleanup of tissues (and for general use), a Florisil® cleanup procedure has been added to the revision of Method 1613 being promulgated today. The Florisil® cleanup is intended primarily for removal of chlorodiphenylethers, a common contaminant in tissues. Though Florisil® is a trade name for a specific adsorbent, EPA does not endorse any specific product or manufacturer; equivalent products may be substituted.

After cleanup, the extract is reconcentrated, internal standards are added, and an aliquot is injected into the HRGC/HRMS, as in the proposed version of Method 1613.

3. Solid-phase Extraction of Aqueous Samples

An optional solid-phase extraction (SPE) procedure has been added to the revision of Method 1613 being promulgated today. This SPE procedure allows laboratories to minimize solvent usage and is therefore consistent with EPA's objectives for source reduction of pollutants and pollution prevention. The SPE procedure is for use with water samples containing less than one percent suspended solids and is therefore applicable to drinking water, river water, ocean water, and relatively clean wastewaters.

In this optional SPE procedure, an SPE disk is placed on a fritted glass disk on top of a vacuum flask. A glass-fiber filter is placed on top of the SPE disk, and a glass container is placed on top of the stack of disks. The assembly is clamped to prevent leakage.

Particles in a 1-L aqueous sample are allowed to settle. The disk is wetted with organic solvents and water, and is kept wet during the extraction. The aqueous sample is poured through the disks. Vacuum is used to increase the flow rate of sample through the disks, if desired. The particles remaining in the bottle are poured in last to minimize plugging of the disks. The sample bottle is rinsed and the rinsate is added to the container on top of the disks.

After all of the sample has been processed through the disks, the disks are extracted using the SDS procedures given in Method 1613 and described at proposal (56 FR 5094).

4. Sample Preservation and Holding Times

Dechlorination, pH reduction below pH=9, and refrigeration or freezing (depending on the sample matrix) are the only techniques required to stabilize the CDDs/CDFs against degradation during storage.

There are no demonstrated maximum holding times associated with CDDs/CDFs in aqueous, solid, semi-solid, tissue, or other sample matrices. If stored in the dark at 0–4°C and preserved as described above, aqueous samples may be stored for up to one year. Similarly, if stored in the dark at <-10°C, solid, semi-solid, and tissue samples may be stored for up to one year. Sample extracts are stored in the dark at <-10°C until analyzed. If stored in the dark at <-10°C, sample extracts may be stored for up to one year.

The version of Method 1613 that is being promulgated today reflects these findings. In addition, today's rule revises Table II of 40 CFR part 136 to reflect the changes in sample preservation and holding times in Method 1613 being promulgated today.

5. Other Improvements

Other significant improvements include: Addition of an optional rotary evaporation procedure for concentration of extracts; simplification of test solutions for demonstration of isomer-specific separation of 2,3,7,8-TCDD and 2,3,7,8-TCDF; and the addition of flow charts to illustrate procedures for aqueous, solid, tissue, and multi-phase samples.

With the improvements described above, EPA believes that the flexibility within Method 1613 has been increased and the costs of performing analyses using Method 1613 have potentially been reduced, thereby resulting in an overall benefit to the regulated and analytical communities.

C. Method Detection Limit (MDL) studies

At the time of proposal, EPA had conducted an initial ''Method Detection Limit'' (MDL) study and determined that Method 1613 could achieve an MDL of 5.6 ppq for 2,3,7,8-TCDD. EPA used this MDL to support a minimum level (ML) of 10 ppq in Method 1613. In Section IV, ''Public Participation and Response to Comments,'' in this preamble, EPA responds to comments about this initial MDL study.

Since proposal, EPA has conducted four additional MDL studies to confirm the MDL for 2,3,7,8-TCDD (TCDD) and to measure MDLs and confirm MLs for the other CDDs/CDFs. The four studies were conducted in reagent water and in final effluent and bleach plant effluent from a pulp and paper industry facility. The studies of reagent water resulted in MDLs of 5.1 and 1.0 ppq for TCDD and MDLs for the other CDDs/CDFs that are consistent with the MLs in Method 1613. For the final effluent, the MDL for TCDD was 4.2 ppq and the MDLs for the other CDDs/CDFs were consistent with the MLs in Method 1613, except for one hexachloro-dioxin, one heptachlorofuran, heptachlorodioxin, and OCDD, which were higher than expected. For the bleach plant effluent, the MDLs were consistent with the MLs in Method 1613 except for 2,3,7,8-TCDD and 2,3,7,8-TCDF, which did not meet the MDL procedure criteria because of high background concentrations of these compounds in the sample.

The results of the four MDL studies are included in the docket for this final rule. Collectively, the four MDL studies demonstrate that the MDLs and MLs for the CDDs/CDFs can be attained in reagent water and in wastewaters from a pulp and paper industry facility.

IV. Public Participation and Response to Comments

Condensed significant comments and responses are presented below. The full text of summarized comments and responses are contained in the docket in the document titled ''Detailed Responses to Comments on Proposal of Method 1613.'' Comments and responses are presented by the following subject areas:

A. Duplication of Methods
B. Method Flexibility
C. Feasibility—Instrumentation and Cost Issues
  1. Waste
  2. Instrumentation
D. Insufficient Validation—General Comments
E. Insufficient Validation of the Matrices Specified in the **Federal Register** Notice
F. Interlaboratory Study
G. Method Detection Limit Studies
H. Detection/Quantitation Levels
I. Quality Assurance/Quality Control
J. Miscellaneous
K. Technical Comments

A. Duplication of Methods

Comment: Proposed Method 1613 and Office of Solid Waste SW–846 Method 8290 are significantly different. Another commenter stated that Methods 1613 and 8290 are similar and that the efforts by OW and OSW are duplicative.

Response: EPA agrees that the two methods are different in exact technical detail, but asserts that the principle of the two methods is the same. EPA is in the process of consolidating methods for dioxin measurement in air, water, and solid waste. However, the Agency's intention for such a merger for all of these matrices should not preclude prompt development and promulgation of this method for the water matrix. Method 1613 is a test method specifically designed to support revisions of the effluent guidelines for the Pulp, Paper, and Paperboard category under the CWA. EPA used Method 1613 in the development of those regulations, specifically for the water matrix. Therefore, EPA is promulgating Method 1613 for evaluation of matrices regulated under the CWA, notwithstanding any technical differences in the method used to evaluate matrices evaluated under the Resource Conservation and Recovery Act. EPA also notes that today's action does not promulgate a test method for measurement of dioxin in sewage sludge, even though the Agency used Method 1613 to measure dioxin concentrations in the ''National Sewage Sludge Survey.'' In the future, EPA intends to propose and invite comment on the use of Method 1613 (or the consolidated multi-matrix method) for the measurement of dioxin in sewage sludge.

B. Method Flexibility

Comment: Flexibility in sample preparation and tailoring of the procedure to the matrix type are desirable, but allowing the analyst the flexibility to modify the Method may adversely affect method performance on real-world samples.

Response: Flexibility is permitted only in discretionary elements of the test procedures indicated by use of the terms ''may'' and ''can.'' All data generated must meet all performance criteria (quality control acceptance criteria) in the Method. Applicability of the QC performance criteria will preclude adverse effects of any modifications allowable under the flexibility in the method.

C. Feasibility—Instrumentation and Cost Issues

1. Waste

Comment: Substantial volumes of CDD/CDF-contaminated lab wastes will be created that cannot be disposed of or treated. The use of isotope dilution instead of external standard techniques will result in the generation of more hazardous waste because each sample is spiked with labeled analogs.

Response: Any analytical method that employs analytical standards for calibration and quality control (QC) purposes will generate a certain amount of laboratory waste. EPA believes that there are environmental benefits associated with using isotope dilution techniques, namely better monitoring and regulation of CDDs/CDFs at very low levels. These benefits outweigh any possible disadvantage of creating relatively small amounts of laboratory waste.

2. Instrumentation

Comment: High resolution mass spectrometer (HRMS) instruments are expensive and there are no U.S. manufacturers.

Response: HRMS instrumentation represents state-of-the-art technology that allows detection of CDD/CDF compounds at far lower levels in less time and with greater certainty than LRMS instrumentation and is therefore worth the added cost. Currently, there are several U.S. manufacturers of HRMS instruments. Moreover, Method 1613 will not be the only applicable method for dioxin in all instances; approval of Method 613 is not being withdrawn by today's action.

Comment: Method 1613 is not very practical since it requires at least two separate analytical runs on two different GC columns, resulting in considerable instrument down-time to switch columns and data collection criteria.

Response: EPA disagrees with the commenters' conclusion that the separate analytical runs will be required in all circumstances. The use of a second GC column is routinely used in many analytical laboratories for confirmatory purposes. An analytical run on the second column is not required unless 2,3,7,8-TCDF is found or if ambiguities exist about the identification of other CDD/CDF congeners on the first column.

Comment: The Soxhlet/Dean-Stark (SDS) extraction procedure for solids has only been tested to a limited extent on one municipal sludge.

Response: Since proposal of Method 1613, EPA, NCASI, and others have extracted many samples using the SDS technique. Although some data show that some of the higher isomers and congeners of dioxin may not be extracted as efficiently with the SDS techique as with other extraction techniques, EPA has not yet confirmed these results. The originators of the application of the SDS technique at the Dow Chemical Company tested the technique on many samples prior to the time that EPA adopted the technique and showed that the technique was able to extract certain CDDs/CDFs from samples believed to contain non-detectable levels of these compounds. In one of the single-laboratory tests, EPA confirmed Dow's findings that certain isomers/congeners were extracted more efficiently with the SDS procedure than with the Soxhlet extractor. EPA reported the results of its SDS extraction study in its proposal of Method 1613 (56 FR 5094). EPA therefore believes that the SDS extractor represents the best available technique for a diversity of sample matrices. Most importantly, however, by today's rulemaking, EPA is not promulgating a test procedure for measurement of solid matrix samples, only waste water samples.

Comment: The procedures proposed for extraction of solids are inappropriate for use on process pulps, dried pulps, or fiber-containing sludges.

Response: EPA is aware that dried pulp and similar samples present a formidable extraction problem. Pulp swells when wet, allowing exchange of the extraction solvent with the water in the interstices of the pulp. Low molecular weight alcohols also seem to swell the pulp fibers and are an alternative to the use of nonpolar solvents for the extraction of CDDs/CDFs from dry pulp. EPA believes that if the dry pulp or similar material is completely swollen in reagent water, however, the SDS extractor will reliably extract CDDs/CDFs from this matrix. EPA has included instructions for dealing with dried pulp and similar materials in the version of Method 1613 being promulgated today.

D. Insufficient Validation—General Comments

Comment: EPA is premature in proposing Method 1613 under section 304(h) of CWA since it was not completely and thoroughly subjected to intra- and interlaboratory testing according to accepted scientific standards.

Response: Prior to proposal of EPA Method 1613, EPA had completed a single-laboratory validation of the SDS extraction technique in municipal sewage sludge and a single-laboratory method detection limit (MDL) study.

Since proposal, EPA has completed a total of four additional MDL studies and the IMVS described in this preamble and in greater detail in the 1613 Report that is included in the docket for today's rule. The four additional MDL studies were performed in reagent water and in bleach plant effluent and final effluent from a pulp and paper industry facility. EPA conducted the international IMVS with the express purpose of further characterizing Method 1613 and developing QC acceptance criteria. EPA believes that the results of these studies provide more than sufficient validation to confirm that Method 1613 is suitable for use as a test procedure in accordance with the requirements of the Clean Water Act. These data confirmed EPA's conclusions about achievable MDLs, which were based on intralaboratory validation studies. Therefore, EPA does not believe it is premature to promulgate Method 1613 at this time because the interlaboratory validation data merely confirms EPA's earlier conclusions.

Comment: EPA has failed to publish performance information for Method 1613, whereas such performance information has been published for the organic methods already incorporated into 40 CFR part 136, appendix A. This commenter urges EPA to include interlaboratory and intralaboratory performance data in any final rule it publishes for Method 1613.

Response: EPA has included performance information in the 1613 Report and in the results of the MDL studies conducted between proposal and this promulgation. These performance data are included in the docket that supports today's final rule.

E. Insufficient Validation of the Matrices Specified in the Federal Register Document

Comment: There has been insufficient intralaboratory testing and validation using the sample matrices for which EPA claims applicability for Method 1613.

Response: EPA has collected single-laboratory data on several matrices, including reagent water, treated and untreated wastewater, paper pulp, sludge, soil, and fish tissue, but has not undertaken complete intra- and interlaboratory validation of each matrix. EPA will perform intra- and interlaboratory validations of Method 1613 and other methods on those matrices for which the Agency believes that such validation is necessary and appropriate. However, EPA believes that it is unnecessary to perform extensive validation studies of Method 1613 or any other method on every sample matrix to which the method is to be applied. For example, EPA regulates more than 600 subcategories of wastewater discharge. EPA believes that interlaboratory validation of Method 1613 on each discharge not only would be costly and impose an enormous administrative burden, but would not be likely to yield any more improvements in the Method than would be gained by single-laboratory tests on a few such representative discharges, particularly for aqueous samples from every conceivable type of industrial facility. Most importantly, however, though EPA believes that Method 1613 is adequate and applicable for the measurement of solid matrices, such as sewage sludge and fish tissue, today's action does not promulgate a method for measurement of those solid matrices. In the future, EPA does intend to propose and invite public comment on use of Method 1613 for measurement of dioxin in sewage sludge.

F. Interlaboratory Study

Comment: Several commenters stated that EPA had not completed its interlaboratory study at time of proposal and that EPA is premature in proposing Method 1613 without validating it first.

Response: The international IMVS has been completed and data from the study were combined with data from the pulp and paper LTVS to produce the final QC acceptance criteria in Method 1613 being promulgated today.

Comment: The use of extracts rather than real-world mill effluents in the interlaboratory study will not provide the necessary validation of Method 1613.

Response: EPA used extracts of real-world samples because the Agency felt that domestic and international shipment of large volumes of dioxin-containing water would create too great a risk to human health and the environment. The Agency also felt that it would be too difficult to produce a homogeneous mixture of CDDs/CDFs in such large water volumes.

G. Method Detection Limit Studies

Comment: The MDLs in Method 1613 have not been demonstrated and it is not possible for even the best laboratories to attain the MDL developed by EPA. The 5 ppq MDL for 2,3,7,8-TCDD in Method 1613 was calculated from a single-shot experiment that was not conducted properly and does not represent a real-world estimate of the MDL because it was not conducted in pulp and paper industry wastewater.

Response: EPA disagrees. EPA had demonstrated an MDL of 5 ppq using Method 1613, as described at proposal. EPA conducted the iterative MDL procedure according to the procedures specified in 40 CFR part 136 appendix B. Since proposal, EPA has conducted a total of four additional MDL studies in reagent water and in in-process and final effluents from the pulp and paper industry. The results of these MDL studies confirm results from the reagent water MDL study described in the Method proposal.

H. Detection/Quantitation Levels

Comment: Method 1613 will not ensure, or even come close to ensuring, that dioxin concentrations at or below EPA's water quality criterion will be achieved. The proposed Method will not be capable of detecting effluent dioxin levels that exceed the in-stream water quality criterion, yet are less than 10 ppq.

Response: EPA agrees. EPA's water quality criterion for 2,3,7,8-TCDD is 13 parts per quintillion (ppqt), while the Method 1613 Minimum Level is 10 ppq. Method 1613 is the product of an extensive method development effort to produce a method that utilizes state-of-the-art technology to reliably achieve the lowest level of detection possible with one-liter water samples. While Method 1613 is not capable of achieving the water quality criterion of 13 ppqt, it is at least 200 times more sensitive than the only currently approved 304(h) dioxin method, Method 613. EPA will continue to explore new measurement techniques to develop methods that yield MDLs that will allow determination of 2,3,7,8-TCDD at the ambient criteria level. In the meantime, however, EPA must regulate effluent discharges at levels lower than those in Method 613, and therefore must move forward with promulgation of Method 1613 for such purposes.

Comment: The term ''minimum level'' (ML) as defined in the proposed rule is inconsistent with previous EPA definitions of ML. EPA equates the ML with the American Chemical Society's limit of quantitation (LOQ), which is different from other EPA documents in which EPA appears to equate the ML to a limit of detection not a limit of quantitation. EPA also stated that the ML is to be calculated based on interlaboratory analyses of the analyte in the matrix of concern. EPA should develop scientifically sound conventions for limits of detection and quantitation, allow public review and comment, and apply those limits consistently to avoid confusion in the interpretation of test data.

Response: EPA believes that the definitions of the ML in methods are

consistent. EPA agrees, however, that there is a need for greater consensus on the definition of terms among methods from all EPA offices and Federal and State analytical programs. EPA is currently addressing these issues through internal communications and meetings with stakeholders. The MLs for Method 1613 have been verified in every laboratory that uses the method by requiring calibration at the ML. MLs can be verified by single laboratory studies or by use since laboratories must calibrate at the ML. EPA will continue to examine the issues of detection and quantitation and will involve the public on these issues when an improved concept is developed.

I. Quality Assurance/Quality Control (QA/QC)

Comment: The instrument calibration procedure outlined in Method 1613 is much more involved than procedures for the 600 series methods. It would be extremely difficult to meet the 12-hour calibration requirements after running a few ''dirty'' samples.

Response: EPA agrees that the calibration procedure in Method 1613 may be somewhat more complicated than the procedures in the 600 series methods. However, the calibration procedure in Method 1613 is virtually identical to the procedures in Method 1624 and 1625, the isotope dilution variants of Methods 624 and 625.

As to the statement that it would be extremely difficult to meet the 12-hour calibration requirements after running a few dirty samples, laboratories under contract to EPA have not reported that verifying calibration is a problem. These laboratories have analyzed in excess of 1,000 samples for EPA using Method 1613.

Comment: No other method in 40 CFR part 136 has a requirement for initial demonstration of laboratory capability (IPRs, Section 8.2 of Method 1613) and Method 1613 should not either. The existing methods approved for measurement under the CWA and the SDWA already require determination of MDLs in accordance with 40 CFR part 136, which should be sufficient for Method 1613.

Response: The use of IPR analyses, which are also referred to as the start-up test, are not new requirements in CWA and SDWA methods. All 600 and 1600 series methods promulgated at 40 CFR part 136 appendix A include a requirement for demonstration of analyst/laboratory capability. These IPR tests are not equivalent to MDL determinations, nor are they intended to be. Although many of the CWA and SDWA methods specify MDLs, few require determination of these MDLs as proofs of performance.

Comment: Method 1613 calls for instrument calibration to be verified at a high level, but calibration should be verified instead at the ML because of uncertainties at that level.

Response: EPA disagrees that calibration should be verified at the ML. In Method 1613, calibration is verified at the mid-point of the analytical range. This verification is common and accepted practice for analytical methods.

Comment: Method 1613 relies on the use of reagent water for tests to determine initial precision and recovery (IPR) and ongoing precision and recovery (OPR). This practice is inappropriate for methods that must rely on extensive cleanup.

Response: EPA disagrees that reagent water is inappropriate for use in the determination of IPR, OPR, and other tests because the primary purpose of these tests is to demonstrate laboratory performance rather than performance on a sample matrix. In addition, Method 1613 requires that if the method is to be applied to a sample matrix other than water (e.g., soil, filter cake, compost, tissue), the most appropriate alternate matrix is substituted for the reagent water matrix in these performance tests. Alternate matrices are listed in Section 7 of Method 1613. Further, Method 1613 requires that all steps used for processing samples, including preparation, extraction, and cleanup, shall be included in the performance tests. This requirement assures that performance problems will be found prior to application of the method to analysis of an environmental sample.

J. Miscellaneous

Comment: For samples containing less than one percent solids, the sample preparation procedure in Method 1613 (which is designed for liquids and solids) could take twice as long as the Method 613 preparation procedure (which is designed for liquids only), and for samples with more than one percent solids, it could take 3–4 times as long as the Method 613 preparation procedure.

Response: EPA agrees that the sample preparation procedures in Method 1613 will be more time-consuming than those in Method 613. Since CDDs/CDFs are known to be strongly associated with any particles in the sample, EPA believes that the additional filtration and extraction steps are necessary to accurately measure CDDs/CDFs in environmental samples at low concentrations.

To reduce the time required for extraction of aqueous samples containing less than 1 percent solids, and to reduce costs and the amount of solvent used in extraction in the interest of pollution prevention, EPA has added a procedure for solid-phase extraction (SPE) to the version of Method 1613 being promulgated today. EPA believes that this procedure will reduce the time required for extraction to levels commensurate with those required for extraction using Method 613.

Comment: The proposed rulemaking provides an insufficient basis for a thorough discussion and consideration of wet weight/dry weight issues for permits.

Response: Nothing in the promulgation of this Method requires the use of dry weight values in establishing effluent limitations in NPDES permits.

Comment: The proposal does not require the use of Method 1613 for any NPDES permits, but permittees should not presume that the NPDES permitting authority would not require use of Method 1613 if the authority determines that pollutants of concern in the effluent can only be measured at the level of concern by Method 1613.

Response: EPA agrees and intends for Method 1613 to be specified in NPDES permits at the discretion of the NPDES permitting authority.

K. Technical Comments

Comment: Table 3 should have one additional chlorinated diphenyl ether monitored (PeCDPE, HxCDPE, HpCDPE, OCDPE, and NCPDPE). The commenter suggested a specific modification to sections 15.1 through 15.4 in those cases when a chlorodiphenyl ether may interfere with the determination of certain CDDs and CDFs.

Response: EPA agrees in principle with the commenter's suggestion but instead has incorporated requirements that meet the spirit of the suggestion into Section 18.3 of Method 1613. The method states that if chromatographic peaks are detected at the retention time of CDDs/CDFs in any of the m/z channels being monitored for the chlorodiphenyl ethers, cleanup procedures must be employed until these interferences are removed. This statement encompasses all the chlorodiphenyl ethers that may interfere in the analysis.

Comment: Methylene chloride is a poor extraction solvent because the solubility of CDDs/CDFs in it is less than that of other readily available solvents. Benzene or toluene should be used instead.

Response: EPA believes that methylene chloride is the solvent of choice for the aqueous filtrates because its higher than water density simplifies the extraction procedure. Similarly, EPA believes that toluene is most suitable for the SDS extraction of particulate sample matter. Finally, EPA believes that safety concerns over the use of a carcinogen such as benzene preclude the use of this traditional solvent in new analytical methods.

Comment: EPA is correct in pointing out the significant importance of handling particulates from aqueous samples, but further study of the methodology is needed to demonstrate that it can produce true quantitative and accurate values which can be used for compliance monitoring.

Response: The SDS extraction technique that is used in Method 1613 is based on widely published uses of the technique. Ample data to support its use are available in the open literature. For example, see references 6 and 7 cited in section 22.0 of Method 613. Further, EPA has now tested the SDS procedure on hundreds of aqueous environmental samples containing particulates (e.g., the databases for the IMVS and LTVS) and believes that SDS is the preferred procedure for such samples.

Comment: The Method should include a statement that indicates the expected analytical range of the Method.

Response: EPA agrees in principle with the comment, however, the analytical range is constrained on the low end by the calibration range, the sample size, and the ability to take a representative aliquot of a sample. The analytical range is not constrained on the upper end because the sample may be diluted to bring the concentrations of CDDs/CDFs within the calibration range, as described in Sections 17.5 and 18.2 of Method 1613.

Comment: NCASI included with its comments approximately 40 pages of suggested technical modifications to Method 1613 to improve the reliability of the Method.

Response: EPA appreciates NCASI's suggestions. NCASI has participated in EPA's validation studies, conducted validation studies of its own, scrutinized the details of Method 1613, and provided many valuable suggestions for improvements to the Method. EPA has adopted most of these suggestions, as well as the suggestions of others, as described in the ''Detailed Responses to Comments on the Proposal of EPA Method 1613'' included in the docket for today's rule. EPA will continue to work with all interested parties to ensure that Method 1613 and other analytical methods are as state-of-the-art as possible.

V. Regulatory Analysis

A. Executive Order 12866

Under Executive Order 12866, 58 FR 51,735 (Oct. 4, 1993), the Agency must determine whether the regulatory action is ''significant'' and therefore subject to OMB review and the requirements of the Executive Order. The Order defines ''significant regulatory action'' as one that is likely to result in a rule that may: (1) Have an annual effect on the economy of $100 million or more or adversely affect in a material way the economy, a sector of the economy, productivity, competition, jobs, the environment, public health or safety, or State, local, or tribal governments or communities; (2) create a serious inconsistency or otherwise interfere with an action taken or planned by another agency; (3) materially alter the budgetary impact of entitlements, grants, user fees, or loan programs or the rights and obligations of recipients thereof; or (4) raise novel legal or policy issues arising out of legal mandates, the President's priorities, or the principles set forth in the Executive Order.''

This regulation is not major because it approves a testing procedure for use in compliance monitoring and data gathering but does not itself require these activities. Therefore, this regulation would not result in a cost to the economy of $100 million or more; would not result in a major increase in costs or prices for consumers or individual industries; and would not have significant adverse effects on competition, investment, innovation, or international trade.

It has been determined that this rule is not a ''significant regulatory action'' under the terms of Executive Order 12866 and is therefore not subject to OMB review.

B. Unfunded Mandates Reform Act

Title II of the Unfunded Mandates Reform Act of 1995 (UMRA), Pub. L. 104–4, establishes requirements for Federal agencies to assess the effects of their regulatory actions on State, local, and tribal governments and the private sector. Under section 202 of the UMRA, EPA generally must prepare a written statement, including a cost-benefit analysis, for proposed and final rules with ''Federal mandates'' that may result in expenditures to State, local, and tribal governments, in the aggregate, or to the private sector, of $100 million or more in any one year. Before promulgating an EPA rule for which a written statement is needed, section 205 of the UMRA generally requires EPA to identify and consider a reasonable number of regulatory alternatives and adopt the least costly, most cost-effective or least burdensome alternative that achieves the objectives of the rule. The provisions of section 205 do not apply when they are inconsistent with applicable law. Moreover, section 205 allows EPA to adopt an alternative other than the least costly, most cost-effective or least burdensome alternative if the Administrator publishes with the final rule an explanation why that alternative was not adopted. Before EPA establishes any regulatory requirements that may significantly or uniquely affect small governments, including tribal governments, it must have developed under section 203 of the UMRA a small government agency plan. The plan must provide for notifying potentially affected small governments, enabling officials of affected small governments to have meaningful and timely input in the development of EPA regulatory proposals with significant Federal intergovernmental mandates, and informing, educating, and advising small governments on compliance with the regulatory requirements.

EPA has determined that this rule does not contain a Federal mandate that may result in expenditures of $100 million or more for State, local, and tribal governments, in the aggregate, or the private sector in any one year. This rule makes available a testing procedure for use in compliance monitoring and data gathering but does not require these activities. Thus, today's rule is not subject to the requirements of sections 202 and 205 of the UMRA.

EPA has determined that this rule contains no regulatory requirements that might significantly or uniquely affect small governments. This rule simply approves a test procedure to be available for use by testing laboratories.

C. Regulatory Flexibility Act

Pursuant to section 605(b) of the Regulatory Flexibility Act, 5 U.S.C. 605(b), the Administrator certifies that this rule will not have a significant economic impact on a substantial number of small entities. This regulation simply approves a test procedure to be available for use by testing laboratories.

D. Paperwork Reduction Act

In accordance with the Paperwork Reduction Act of 1980, 44 U.S.C. 3501 *et seq.*, EPA must submit a copy of any rule that contains a collection-of-information requirement to the Director of the Office of Management and Budget (OMB) for review and approval. This

rule contains no additional information collection requirements beyond those already required by 40 CFR parts 122, 141, 142, 403, and 425, and approved by OMB (40 CFR part 9). The relevant OMB control numbers are 2040–0086, 2040–0170, 2040–0068, 2040–0110, 2040–0004, 2040-0090, and 2040–0009. Therefore, preparation of an information collection request to accompany this rule is unnecessary.

E. Submission to Congress and the General Accounting Office

Under 5 U.S.C. 801(a)(1)(A) as added by the Small Business Regulatory Enforcement Fairness Act of 1996, EPA submitted a report containing this rule and other required information to the U.S. Senate, the U.S. House of Representatives, and the Comptroller General of the General Accounting Office, prior to publication of the rule in today's **Federal Register**. This rule is not a ''major rule'' as defined by 5 U.S.C. 804(2).

List of Subjects in 40 CFR Part 136

Environmental protection, Reporting and recordkeeping requirements, Water pollution control.

Dated: September 2, 1997.

Carol M. Browner,

Administrator.

In consideration of the preceding, USEPA amends 40 CFR Part 136 as set forth below.

PART 136—[AMENDED]

1. The authority citation for part 136 continues to read as follows:

Authority: Secs. 301, 304(h), 307, and 501(a) Pub. L. 95–217, Stat. 1566, *et seq.* (33 U.S.C. 1251, *et seq.*) (The Federal Water Pollution Control Act Amendments of 1972 as amended by the Clean Water Act of 1977 and the Water Quality Act of 1987), 33 U.S.C. 1314 and 1361; 86 Stat. 816, Pub. L. 92–500; 91 Stat. 1567, Pub. L. 92–217; Stat. 7, Pub. L. 100–4 (The ''Act'').

2. In § 136.3(a), Table 1C.—List of Approved Test Procedures for Non-pesticide Organic Compounds, is amended by revising entries 60 through 97, by adding new entries 60 through 113, and by revising Table IC Notes [1] and [2] as follows:

§ 136.3 Identification of test procedures.

* * * * *

TABLE 1C.—LIST OF APPROVED TEST PROCEDURES FOR NON-PESTICIDE ORGANIC COMPOUNDS

Parameter [1]	GC	EPA method number [2, 7]			ASTM	Other
		GC/MS	HPLC	Standard methods 18th ed.		
*	*	*	*	*	*	*
60. 1,2,3,4,6,7,8-Heptachlorodibenzofuran.	.....	1613	.....			
61. 1,2,3,4,7,8,9-Heptachlorodibenzofuran.	.....	1613	.....			
62. 1,2,3,4,6,7,8-Heptachlorodibenzo-*p*-dioxin.	.....	1613	.....			
63. Hexachlorobenzene	612	625, 1625	.....	6410 B		
64. Hexachlorobutadiene	612	625, 1625	.....	6410 B		
65. Hexachlorocyclopentadiene	612	625, 1625 [5]	.....	6410 B		
66. 1,2,3,4,7,8-Hexachlorodibenzofuran	.....	1613	.....			
67. 1,2,3,6,7,8-Hexachlorodibenzofuran	.....	1613	.....			
68. 1,2,3,7,8,9-Hexachlorodibenzofuran	.....	1613	.....			
69. 2,3,4,6,7,8-Hexachlorodibenzofuran	.....	1613	.....			
70. 1,2,3,4,7,8-Hexachlorodibenzo-*p*-dioxin.	.....	1613	.....			
71. 1,2,3,6,7,8-Hexachlorodibenzo-*p*-dioxin.	.....	1613	.....			
72. 1,2,3,7,8,9-Hexachlorodibenzo-*p*-dioxin.	.....	1613	.....			
73. Hexachloroethane	616	625, 1625	.....	6410 B		
74. Ideno(1,2,3-cd)pyrene	610	625, 1625	610	6410 B, 6440 B	D4657–87	
75. Isophorone	609	625, 1625	.....	6410 B		
76. Methylene chloride	601	624, 1624	.....	6230 B		Note 3, p. 130.
77. 2-Methyl-4,6-dinitrophenol	604	625, 1625	.....	6420 B, 6410 B		
78. Naphthalene	610	625, 1625	610	6410 B, 6440 B		
79. Nitrobenzene	609	625, 1625	.....	6410 B	D4657–87	
80. 2-Nitrophenol	604	625, 1625	.....	6410 B, 6420 B		
81. 4-Nitrophenol	604	625, 1625	.....	6410 B, 6420 B		
82. N-Nitrosodimethylamine	607	625, 1625	.....	6410 B		
83. N-Nitrosodi-n-propylamine	607	625, 1625 [5]	.....	6410 B		
84. N-Nitrosodiphenylamine	607	625, 1625 [5]	.....	6410 B		
85. Octachlorodibenzofuran	.....	1613	.....			
86. Octachlorodibenzo-*p*-dioxin	.....	1613	.....			
87. 2,2-Oxybis(1-chloropropane)	611	625, 1625	.....	6410 B		
88. PCB–1016	608	625	.....	6410 B		Note 3, p. 43.
89. PCB–1221	608	625	.....	6410 B		Note 3, p. 43.
90. PCB–1232	608	625	.....	6410 B		Note 3, p. 43.
91. PCB 1242	608	625	.....	6410 B		Note 3, p. 43.
92. PCB–1248	608	625	.....			
93. PCB–1254	608	625	.....	6410 B		Note 3, p. 43.
94. PCB–1260	608	625	.....	6410 B, 6630 B		Note 3, p. 43.
95. 1,2,3,7,8-Pentachlorodibenzofuran	.....	1613	.....			
96. 2,3,4,7,8-Pentachlorodibenzofuran	.....	1613	.....			

TABLE 1C.—LIST OF APPROVED TEST PROCEDURES FOR NON-PESTICIDE ORGANIC COMPOUNDS—Continued

Parameter [1]	GC	EPA method number [2, 7]			ASTM	Other
		GC/MS	HPLC	Standard methods 18th ed.		
97. 1,2,3,7,8-Pentachlorodibenzo-*p*-*dioxin*.	.....	1613	.....			
98. Pentachlorophenol	604	625, 1625	.....	6410 B, 6630 B		Note 3, p. 140.
99. Phenanthrene	610	625, 1625	610	6410 B, 6440 B	D4657–87	
100. Phenol	604	625, 1625	.....	6420 B, 6410 B		
101. Pyrene	610	625, 1625	610	6410 B, 6440 B	D4657–87	
102. 2,3,7,8-Tetrachlorodibenzofuran	.....	1613	.....			
103. 2,3,7,8-Tetrachlorodibenzo-*p*-dioxin.	.....	613, 1613 [5]	.....			
104. 1,1,2,2-Tetrachloroethane	601	624, 1624	.....	6230 B, 6210 B		Note 3, p. 130.
105. Tetrachloroethene	601	624, 1624	.....	6230 B, 6410 B		Note 3, p. 130.
106. Toluene	602	624, 1624	.....	6210 B, 6220 B		
107. 1,2,4-Trichlorobenzene	612	625, 1625	.....	6410 B		Note 3, p. 130.
108. 1,1,1-Trichloroethane	601	624, 1624	.....	6210 B, 6230 B		
109. 1,1,2-Trichloroethane	601	624, 1624	.....	6210 B, 6230 B		Note 3, p. 130.
110. Trichloroethene	601	624, 1624	.....	6210 B, 6230 B		
111. Trichlorofluoromethane	601	624	.....	6210 B, 6230 B		
112. 2,4,6-Trichlorophenol	604	625, 1625	.....	6410 B, 6240 B		
113. Vinyl chloride	601	624, 1624	.....	6210 B, 6230 B		

* * * * * * *

[1] All parameters are expressed in micrograms per liter (µg/L) except for Method 1613 in which the parameters are expressed in picograms per liter (pg/L).

[2] The full text of Methods 601–613, 624, 625, 1624, and 1625, are given at Appendix A, ''Test Procedures for Analysis of Organic Pollutants,'' of this Part 136. The full text of Method 1613 is incorporated by reference into this Part 136 and is available from the National Technical Information Services as stock number PB95–104774. The standardized test procedure to be used to determine the method detection limit (MDL) for these test procedures is given at Appendix B, ''Definition and Procedures for the Determination of the Method Detection Limit,'' of this Part 136.

* * * * * * *

[5] [5a], and [7] unchanged.

3. In § 136.3(b), the listing titled References, Sources, Costs, and Table Citations is amended by revising the first sentence of paragraph (1) to read as follows:

§ 136.3 Identification of test procedures.

* * * * *

References, Sources, Costs, and Table Citations

(1) The full texts of Methods 601–613, 624, 625, 1613, 1624, and 1625 are printed in appendix A of this part 136.

* * *

4. In § 136.3(e), Table II—Required Containers, Preservation Techniques, and Holding Times, is amended by revising Table IC—Organic Tests to read as follows:

TABLE II.—REQUIRED CONTAINERS, PRESERVATION TECHNIQUES, AND HOLDING TIMES

Parameter No./name	Container [1]	Preservation [2 3]	Maximum holding time [4]
* *	* *	* *	*
Table IC—Organic Tests [8]			
13, 18–20, 22, 24–28, 34–37, 39–43, 45–47, 56, 76, 104, 105, 108–111, 113. Purgeable Halocarbons.	G, Teflon-lined septum	Cool, 4°C, 0.008% $Na_2S_2O_3$ [5].	14 days.
6, 57, 106. Purgeable aromatic hydrocarbons.	.....do	Cool, 4°C, 0.008% $Na_2S_2O_3$,[5] HCl to pH2[9].	Do.
3, 4. Acrolein and acrylonitrile	.....do	Cool, 4°C, 0.008% $Na_2S_2O_3$,[5] adjust pH to 4–5[10].	Do.
23, 30, 44, 49, 53, 77, 80, 81, 98, 100, 112. Phenols [11].	G, Teflon-lined cap.	Cool, 4°C, 0.008% $Na_2S_2O_3$ [5]	7 days until extraction; 40 days after extraction.
7, 38. Benzidines [11]	.....do	.....do	7 days until extraction.[13]
14, 17, 48, 50–52. Phthalate esters [11].	.....do	Cool, 4°C	7 days until extraction; 40 days after extraction.
82–84. Nitrosamines [11 14]	.....do	Cool, 4°C, 0.008% $Na_2S_2O_3$,[5] store in dark.	Do.
88–94. PCBs [11]	.....do	Cool, 4°C	Do.
54, 55, 75, 79. Nitroaromatics and isophorone [11].	.....do	Cool, 4°C, 0.008% $Na_2S_2O_3$,[5] store in dark.	Do.
1, 2, 5, 8–12, 32, 33, 58, 59, 74, 78, 99, 101. Polynuclear aromatic hydrocarbons [11].	.....do	.....do	Do.
15, 16, 21, 31, 87. Haloethers [11]	.....do	Cool, 4°C, 0.008% $Na_2S_2O_3$ [5]	Do.

TABLE II.—REQUIRED CONTAINERS, PRESERVATION TECHNIQUES, AND HOLDING TIMES—Continued

Parameter No./name	Container [1]	Preservation [2 3]	Maximum holding time [4]
29, 35–37, 63–65, 73, 107. Chlorinated hydrocarbons [11].	.....do	Cool, 4°C	Do.
60–62, 66–72, 85, 86, 95–97, 102, 103. CDDs/CDFs [11]			
aqueous: field and lab preservation..	G	Cool, 0–4°C, pH<9, 0.008% $Na_2S_2O_3$ [5]	1 year.
Solids, mixed phase, and tissue: field preservation..	.....do	Cool, <4°C	7 days.
Solids, mixed phase, and tissue: lab preservation.	.....do	Freeze, <−10°C	1 year.

* * * * * * *

* * * * *

Note: The footnotes remain unchanged.

4. In part 136, appendix A is amended by adding Method 1613 to read as follows:

Method 1613, Revision B

Tetra- Through Octa-Chlorinated Dioxins and Furans by Isotope Dilution HRGC/HRMS

1.0 Scope and Application

1.1 This method is for determination of tetra- through octa-chlorinated dibenzo-p-dioxins (CDDs) and dibenzofurans (CDFs) in water, soil, sediment, sludge, tissue, and other sample matrices by high resolution gas chromatography/high resolution mass spectrometry (HRGC/HRMS). The method is for use in EPA's data gathering and monitoring programs associated with the Clean Water Act, the Resource Conservation and Recovery Act, the Comprehensive Environmental Response, Compensation and Liability Act, and the Safe Drinking Water Act. The method is based on a compilation of EPA, industry, commercial laboratory, and academic methods (References 1–6).

1.2 The seventeen 2,3,7,8-substituted CDDs/CDFs listed in Table 1 may be determined by this method. Specifications are also provided for separate determination of 2,3,7,8-tetrachloro-dibenzo-p-dioxin (2,3,7,8-TCDD) and 2,3,7,8-tetrachloro-dibenzofuran (2,3,7,8-TCDF).

1.3 The detection limits and quantitation levels in this method are usually dependent on the level of interferences rather than instrumental limitations. The minimum levels (MLs) in Table 2 are the levels at which the CDDs/CDFs can be determined with no interferences present. The Method Detection Limit (MDL) for 2,3,7,8-TCDD has been determined as 4.4 pg/L (parts-per-quadrillion) using this method.

1.4 The GC/MS portions of this method are for use only by analysts experienced with HRGC/HRMS or under the close supervision of such qualified persons. Each laboratory that uses this method must demonstrate the ability to generate acceptable results using the procedure in Section 9.2.

1.5 This method is ''performance-based''. The analyst is permitted to modify the method to overcome interferences or lower the cost of measurements, provided that all performance criteria in this method are met. The requirements for establishing method equivalency are given in Section 9.1.2.

1.6 Any modification of this method, beyond those expressly permitted, shall be considered a major modification subject to application and approval of alternate test procedures under 40 CFR 136.4 and 136.5.

2.0 Summary of Method

Flow charts that summarize procedures for sample preparation, extraction, and analysis are given in Figure 1 for aqueous and solid samples, Figure 2 for multi-phase samples, and Figure 3 for tissue samples.

2.1 Extraction.

2.1.1 Aqueous samples (samples containing less than 1% solids)—Stable isotopically labeled analogs of 15 of the 2,3,7,8-substituted CDDs/CDFs are spiked into a 1 L sample, and the sample is extracted by one of three procedures:

2.1.1.1 Samples containing no visible particles are extracted with methylene chloride in a separatory funnel or by the solid-phase extraction technique summarized in Section 2.1.1.3. The extract is concentrated for cleanup.

2.1.1.2 Samples containing visible particles are vacuum filtered through a glass-fiber filter. The filter is extracted in a Soxhlet/Dean-Stark (SDS) extractor (Reference 7), and the filtrate is extracted with methylene chloride in a separatory funnel. The methylene chloride extract is concentrated and combined with the SDS extract prior to cleanup.

2.1.1.3 The sample is vacuum filtered through a glass-fiber filter on top of a solid-phase extraction (SPE) disk. The filter and disk are extracted in an SDS extractor, and the extract is concentrated for cleanup.

2.1.2 Solid, semi-solid, and multi-phase samples (but not tissue)—The labeled compounds are spiked into a sample containing 10 g (dry weight) of solids. Samples containing multiple phases are pressure filtered and any aqueous liquid is discarded. Coarse solids are ground or homogenized. Any non-aqueous liquid from multi-phase samples is combined with the solids and extracted in an SDS extractor. The extract is concentrated for cleanup.

2.1.3 Fish and other tissue—The sample is extracted by one of two procedures:

2.1.3.1 Soxhlet or SDS extraction—A 20 g aliquot of sample is homogenized, and a 10 g aliquot is spiked with the labeled compounds. The sample is mixed with sodium sulfate, allowed to dry for 12–24 hours, and extracted for 18–24 hours using methylene chloride:hexane (1:1) in a Soxhlet extractor. The extract is evaporated to dryness, and the lipid content is determined.

2.1.3.2 HCl digestion—A 20 g aliquot is homogenized, and a 10 g aliquot is placed in a bottle and spiked with the labeled compounds. After equilibration, 200 mL of hydrochloric acid and 200 mL of methylene chloride:hexane (1:1) are added, and the bottle is agitated for 12–24 hours. The extract is evaporated to dryness, and the lipid content is determined.

2.2 After extraction, $^{37}Cl_4$-labeled 2,3,7,8-TCDD is added to each extract to measure the efficiency of the cleanup process. Sample cleanups may include

back-extraction with acid and/or base, and gel permeation, alumina, silica gel, Florisil and activated carbon chromatography. High-performance liquid chromatography (HPLC) can be used for further isolation of the 2,3,7,8-isomers or other specific isomers or congeners. Prior to the cleanup procedures cited above, tissue extracts are cleaned up using an anthropogenic isolation column, a batch silica gel adsorption, or sulfuric acid and base back-extraction, depending on the tissue extraction procedure used.

2.3 After cleanup, the extract is concentrated to near dryness. Immediately prior to injection, internal standards are added to each extract, and an aliquot of the extract is injected into the gas chromatograph. The analytes are separated by the GC and detected by a high-resolution (≥10,000) mass spectrometer. Two exact m/z's are monitored for each analyte.

2.4 An individual CDD/CDF is identified by comparing the GC retention time and ion-abundance ratio of two exact m/z's with the corresponding retention time of an authentic standard and the theoretical or acquired ion-abundance ratio of the two exact m/z's. The non-2,3,7,8 substituted isomers and congeners are identified when retention times and ion-abundance ratios agree within predefined limits. Isomer specificity for 2,3,7,8-TCDD and 2,3,7,8-TCDF is achieved using GC columns that resolve these isomers from the other tetra-isomers.

2.5 Quantitative analysis is performed using selected ion current profile (SICP) areas, in one of three ways:

2.5.1 For the 15 2,3,7,8-substituted CDDs/CDFs with labeled analogs (see Table 1), the GC/MS system is calibrated, and the concentration of each compound is determined using the isotope dilution technique.

2.5.2 For 1,2,3,7,8,9-HxCDD, OCDF, and the labeled compounds, the GC/MS system is calibrated and the concentration of each compound is determined using the internal standard technique.

2.5.3 For non-2,3,7,8-substituted isomers and for all isomers at a given level of chlorination (i.e., total TCDD), concentrations are determined using response factors from calibration of the CDDs/CDFs at the same level of chlorination.

2.6 The quality of the analysis is assured through reproducible calibration and testing of the extraction, cleanup, and GC/MS systems.

3.0 Definitions

Definitions are given in the glossary at the end of this method.

4.0 Contamination and Interferences

4.1 Solvents, reagents, glassware, and other sample processing hardware may yield artifacts and/or elevated baselines causing misinterpretation of chromatograms (References 8–9). Specific selection of reagents and purification of solvents by distillation in all-glass systems may be required. Where possible, reagents are cleaned by extraction or solvent rinse.

4.2 Proper cleaning of glassware is extremely important, because glassware may not only contaminate the samples but may also remove the analytes of interest by adsorption on the glass surface.

4.2.1 Glassware should be rinsed with solvent and washed with a detergent solution as soon after use as is practical. Sonication of glassware containing a detergent solution for approximately 30 seconds may aid in cleaning. Glassware with removable parts, particularly separatory funnels with fluoropolymer stopcocks, must be disassembled prior to detergent washing.

4.2.2 After detergent washing, glassware should be rinsed immediately, first with methanol, then with hot tap water. The tap water rinse is followed by another methanol rinse, then acetone, and then methylene chloride.

4.2.3 Do not bake reusable glassware in an oven as a routine part of cleaning. Baking may be warranted after particularly dirty samples are encountered but should be minimized, as repeated baking of glassware may cause active sites on the glass surface that will irreversibly adsorb CDDs/CDFs.

4.2.4 Immediately prior to use, the Soxhlet apparatus should be pre-extracted with toluene for approximately three hours (see Sections 12.3.1 through 12.3.3). Separatory funnels should be shaken with methylene chloride/toluene (80/20 mixture) for two minutes, drained, and then shaken with pure methylene chloride for two minutes.

4.3 All materials used in the analysis shall be demonstrated to be free from interferences by running reference matrix method blanks initially and with each sample batch (samples started through the extraction process on a given 12-hour shift, to a maximum of 20 samples).

4.3.1 The reference matrix must simulate, as closely as possible, the sample matrix under test. Ideally, the reference matrix should not contain the CDDs/CDFs in detectable amounts, but should contain potential interferents in the concentrations expected to be found in the samples to be analyzed. For example, a reference sample of human adipose tissue containing pentachloronaphthalene can be used to exercise the cleanup systems when samples containing pentachloronaphthalene are expected.

4.3.2 When a reference matrix that simulates the sample matrix under test is not available, reagent water (Section 7.6.1) can be used to simulate water samples; playground sand (Section 7.6.2) or white quartz sand (Section 7.3.2) can be used to simulate soils; filter paper (Section 7.6.3) can be used to simulate papers and similar materials; and corn oil (Section 7.6.4) can be used to simulate tissues.

4.4 Interferences coextracted from samples will vary considerably from source to source, depending on the diversity of the site being sampled. Interfering compounds may be present at concentrations several orders of magnitude higher than the CDDs/CDFs. The most frequently encountered interferences are chlorinated biphenyls, methoxy biphenyls, hydroxydiphenyl ethers, benzylphenyl ethers, polynuclear aromatics, and pesticides. Because very low levels of CDDs/CDFs are measured by this method, the elimination of interferences is essential. The cleanup steps given in Section 13 can be used to reduce or eliminate these interferences and thereby permit reliable determination of the CDDs/CDFs at the levels shown in Table 2.

4.5 Each piece of reusable glassware should be numbered to associate that glassware with the processing of a particular sample. This will assist the laboratory in tracking possible sources of contamination for individual samples, identifying glassware associated with highly contaminated samples that may require extra cleaning, and determining when glassware should be discarded.

4.6 Cleanup of tissue—The natural lipid content of tissue can interfere in the analysis of tissue samples for the CDDs/CDFs. The lipid contents of different species and portions of tissue can vary widely. Lipids are soluble to varying degrees in various organic solvents and may be present in sufficient quantity to overwhelm the column chromatographic cleanup procedures used for cleanup of sample extracts. Lipids must be removed by the lipid removal procedures in Section 13.7, followed by alumina (Section 13.4) or Florisil (Section 13.8), and carbon

(Section 13.5) as minimum additional cleanup steps. If chlorodiphenyl ethers are detected, as indicated by the presence of peaks at the exact m/z's monitored for these interferents, alumina and/or Florisil cleanup must be employed to eliminate these interferences.

5.0 Safety

5.1 The toxicity or carcinogenicity of each compound or reagent used in this method has not been precisely determined; however, each chemical compound should be treated as a potential health hazard. Exposure to these compounds should be reduced to the lowest possible level.

5.1.1 The 2,3,7,8-TCDD isomer has been found to be acnegenic, carcinogenic, and teratogenic in laboratory animal studies. It is soluble in water to approximately 200 ppt and in organic solvents to 0.14%. On the basis of the available toxicological and physical properties of 2,3,7,8-TCDD, all of the CDDs/CDFs should be handled only by highly trained personnel thoroughly familiar with handling and cautionary procedures and the associated risks.

5.1.2 It is recommended that the laboratory purchase dilute standard solutions of the analytes in this method. However, if primary solutions are prepared, they shall be prepared in a hood, and a NIOSH/MESA approved toxic gas respirator shall be worn when high concentrations are handled.

5.2 The laboratory is responsible for maintaining a current awareness file of OSHA regulations regarding the safe handling of the chemicals specified in this method. A reference file of material safety data sheets (MSDSs) should also be made available to all personnel involved in these analyses. It is also suggested that the laboratory perform personal hygiene monitoring of each analyst who uses this method and that the results of this monitoring be made available to the analyst. Additional information on laboratory safety can be found in References 10–13. The references and bibliography at the end of Reference 13 are particularly comprehensive in dealing with the general subject of laboratory safety.

5.3 The CDDs/CDFs and samples suspected to contain these compounds are handled using essentially the same techniques employed in handling radioactive or infectious materials. Well-ventilated, controlled access laboratories are required. Assistance in evaluating the health hazards of particular laboratory conditions may be obtained from certain consulting laboratories and from State Departments of Health or Labor, many of which have an industrial health service. The CDDs/CDFs are extremely toxic to laboratory animals. Each laboratory must develop a strict safety program for handling these compounds. The practices in References 2 and 14 are highly recommended.

5.3.1 Facility—When finely divided samples (dusts, soils, dry chemicals) are handled, all operations (including removal of samples from sample containers, weighing, transferring, and mixing) should be performed in a glove box demonstrated to be leak tight or in a fume hood demonstrated to have adequate air flow. Gross losses to the laboratory ventilation system must not be allowed. Handling of the dilute solutions normally used in analytical and animal work presents no inhalation hazards except in the case of an accident.

5.3.2 Protective equipment—Disposable plastic gloves, apron or lab coat, safety glasses or mask, and a glove box or fume hood adequate for radioactive work should be used. During analytical operations that may give rise to aerosols or dusts, personnel should wear respirators equipped with activated carbon filters. Eye protection equipment (preferably full face shields) must be worn while working with exposed samples or pure analytical standards. Latex gloves are commonly used to reduce exposure of the hands. When handling samples suspected or known to contain high concentrations of the CDDs/CDFs, an additional set of gloves can also be worn beneath the latex gloves.

5.3.3 Training—Workers must be trained in the proper method of removing contaminated gloves and clothing without contacting the exterior surfaces.

5.3.4 Personal hygiene—Hands and forearms should be washed thoroughly after each manipulation and before breaks (coffee, lunch, and shift).

5.3.5 Confinement—Isolated work areas posted with signs, segregated glassware and tools, and plastic absorbent paper on bench tops will aid in confining contamination.

5.3.6 Effluent vapors—The effluents of sample splitters from the gas chromatograph (GC) and from roughing pumps on the mass spectrometer (MS) should pass through either a column of activated charcoal or be bubbled through a trap containing oil or high-boiling alcohols to condense CDD/CDF vapors.

5.3.7 Waste Handling—Good technique includes minimizing contaminated waste. Plastic bag liners should be used in waste cans. Janitors and other personnel must be trained in the safe handling of waste.

5.3.8 Decontamination

5.3.8.1 Decontamination of personnel—Use any mild soap with plenty of scrubbing action.

5.3.8.2 Glassware, tools, and surfaces—Chlorothene NU Solvent is the least toxic solvent shown to be effective. Satisfactory cleaning may be accomplished by rinsing with Chlorothene, then washing with any detergent and water. If glassware is first rinsed with solvent, then the dish water may be disposed of in the sewer. Given the cost of disposal, it is prudent to minimize solvent wastes.

5.3.9 Laundry—Clothing known to be contaminated should be collected in plastic bags. Persons who convey the bags and launder the clothing should be advised of the hazard and trained in proper handling. The clothing may be put into a washer without contact if the launderer knows of the potential problem. The washer should be run through a cycle before being used again for other clothing.

5.3.10 Wipe tests—A useful method of determining cleanliness of work surfaces and tools is to wipe the surface with a piece of filter paper. Extraction and analysis by GC with an electron capture detector (ECD) can achieve a limit of detection of 0.1 µg per wipe; analysis using this method can achieve an even lower detection limit. Less than 0.1 µg per wipe indicates acceptable cleanliness; anything higher warrants further cleaning. More than 10 µg on a wipe constitutes an acute hazard and requires prompt cleaning before further use of the equipment or work space, and indicates that unacceptable work practices have been employed.

5.3.11 Table or wrist-action shaker—The use of a table or wrist-action shaker for extraction of tissues presents the possibility of breakage of the extraction bottle and spillage of acid and flammable organic solvent. A secondary containment system around the shaker is suggested to prevent the spread of acid and solvents in the event of such a breakage. The speed and intensity of shaking action should also be adjusted to minimize the possibility of breakage.

6.0 Apparatus and Materials

Note: Brand names, suppliers, and part numbers are for illustration purposes only and no endorsement is implied. Equivalent performance may be achieved using apparatus and materials other than those specified here. Meeting the performance requirements of this method is the responsibility of the laboratory.

6.1 Sampling Equipment for Discrete or Composite Sampling

6.1.1 Sample bottles and caps

6.1.1.1 Liquid samples (waters, sludges and similar materials containing 5% solids or less)—Sample bottle, amber glass, 1.1 L minimum, with screw cap.

6.1.1.2 Solid samples (soils, sediments, sludges, paper pulps, filter cake, compost, and similar materials that contain more than 5% solids)—Sample bottle, wide mouth, amber glass, 500 mL minimum.

6.1.1.3 If amber bottles are not available, samples shall be protected from light.

6.1.1.4 Bottle caps—Threaded to fit sample bottles. Caps shall be lined with fluoropolymer.

6.1.1.5 Cleaning

6.1.1.5.1 Bottles are detergent water washed, then solvent rinsed before use.

6.1.1.5.2 Liners are detergent water washed, rinsed with reagent water (Section 7.6.1) followed by solvent, and baked at approximately 200°C for a minimum of 1 hour prior to use.

6.1.2 Compositing equipment—Automatic or manual compositing system incorporating glass containers cleaned per bottle cleaning procedure above. Only glass or fluoropolymer tubing shall be used. If the sampler uses a peristaltic pump, a minimum length of compressible silicone rubber tubing may be used in the pump only. Before use, the tubing shall be thoroughly rinsed with methanol, followed by repeated rinsing with reagent water to minimize sample contamination. An integrating flow meter is used to collect proportional composite samples.

6.2 Equipment for Glassware Cleaning—Laboratory sink with overhead fume hood.

6.3 Equipment for Sample Preparation

6.3.1 Laboratory fume hood of sufficient size to contain the sample preparation equipment listed below.

6.3.2 Glove box (optional).

6.3.3 Tissue homogenizer—VirTis Model 45 Macro homogenizer (American Scientific Products H–3515, or equivalent) with stainless steel Macro-shaft and Turbo-shear blade.

6.3.4 Meat grinder—Hobart, or equivalent, with 3–5 mm holes in inner plate.

6.3.5 Equipment for determining percent moisture

6.3.5.1 Oven—Capable of maintaining a temperature of 110 ±5°C.

6.3.5.2 Dessicator.

6.3.6 Balances

6.3.6.1 Analytical—Capable of weighing 0.1 mg.

6.3.6.2 Top loading—Capable of weighing 10 mg.

6.4 Extraction Apparatus

6.4.1 Water samples

6.4.1.1 pH meter, with combination glass electrode.

6.4.1.2 pH paper, wide range (Hydrion Papers, or equivalent).

6.4.1.3 Graduated cylinder, 1 L capacity.

6.4.1.4 Liquid/liquid extraction—Separatory funnels, 250 mL, 500 mL, and 2000 mL, with fluoropolymer stopcocks.

6.4.1.5 Solid-phase extraction

6.4.1.5.1 One liter filtration apparatus, including glass funnel, glass frit support, clamp, adapter, stopper, filtration flask, and vacuum tubing (Figure 4). For wastewater samples, the apparatus should accept 90 or 144 mm disks. For drinking water or other samples containing low solids, smaller disks may be used.

6.4.1.5.2 Vacuum source capable of maintaining 25 in. Hg, equipped with shutoff valve and vacuum gauge.

6.4.1.5.3 Glass-fiber filter—Whatman GMF 150 (or equivalent), 1 micron pore size, to fit filtration apparatus in Section 6.4.1.5.1.

6.4.1.5.4 Solid-phase extraction disk containing octadecyl (C_{18}) bonded silica uniformly enmeshed in an inert matrix—Fisher Scientific 14–378F (or equivalent), to fit filtration apparatus in Section 6.4.1.5.1.

6.4.2 Soxhlet/Dean-Stark (SDS) extractor (Figure 5)—For filters and solid/sludge samples.

6.4.2.1 Soxhlet—50 mm ID, 200 mL capacity with 500 mL flask (Cal-Glass LG–6900, or equivalent, except substitute 500 mL round-bottom flask for 300 mL flat-bottom flask).

6.4.2.2 Thimble—43 × 123 to fit Soxhlet (Cal-Glass LG–6901–122, or equivalent).

6.4.2.3 Moisture trap—Dean Stark or Barret with fluoropolymer stopcock, to fit Soxhlet.

6.4.2.4 Heating mantle—Hemispherical, to fit 500 mL round-bottom flask (Cal-Glass LG–8801–112, or equivalent).

6.4.2.5 Variable transformer—Powerstat (or equivalent), 110 volt, 10 amp.

6.4.3 Apparatus for extraction of tissue.

6.4.3.1 Bottle for extraction (if digestion/extraction using HCl is used)'' 500–600 mL wide-mouth clear glass, with fluoropolymer-lined cap.

6.4.3.2 Bottle for back-extraction—100–200 mL narrow-mouth clear glass with fluoropolymer-lined cap.

6.4.3.3 Mechanical shaker—Wrist-action or platform-type rotary shaker that produces vigorous agitation (Sybron Thermolyne Model LE ''Big Bill'' rotator/shaker, or equivalent).

6.4.3.4 Rack attached to shaker table to permit agitation of four to nine samples simultaneously.

6.4.4 Beakers—400–500 mL.

6.4.5 Spatulas—Stainless steel.

6.5 Filtration Apparatus.

6.5.1 Pyrex glass wool—Solvent-extracted by SDS for three hours minimum.

Note: Baking glass wool may cause active sites that will irreversibly adsorb CDDs/CDFs.

6.5.2 Glass funnel—125–250 mL.

6.5.3 Glass-fiber filter paper—Whatman GF/D (or equivalent), to fit glass funnel in Section 6.5.2.

6.5.4 Drying column—15–20 mm ID Pyrex chromatographic column equipped with coarse-glass frit or glass-wool plug.

6.5.5 Buchner funnel—15 cm.

6.5.6 Glass-fiber filter paper—to fit Buchner funnel in Section 6.5.5.

6.5.7 Filtration flasks—1.5–2.0 L, with side arm.

6.5.8 Pressure filtration apparatus—Millipore YT30 142 HW, or equivalent.

6.6 Centrifuge Apparatus.

6.6.1 Centrifuge—Capable of rotating 500 mL centrifuge bottles or 15 mL centrifuge tubes at 5,000 rpm minimum.

6.6.2 Centrifuge bottles—500 mL, with screw-caps, to fit centrifuge.

6.6.3 Centrifuge tubes—12–15 mL, with screw-caps, to fit centrifuge.

6.7 Cleanup Apparatus.

6.7.1 Automated gel permeation chromatograph (Analytical Biochemical Labs, Inc, Columbia, MO, Model GPC Autoprep 1002, or equivalent).

6.7.1.1 Column—600–700 mm long × 25 mm ID, packed with 70 g of SX–3 Bio-beads (Bio-Rad Laboratories, Richmond, CA, or equivalent).

6.7.1.2 Syringe—10 mL, with Luer fitting.

6.7.1.3 Syringe filter holder—stainless steel, and glass-fiber or fluoropolymer filters (Gelman 4310, or equivalent).

6.7.1.4 UV detectors—254 nm, preparative or semi-preparative flow cell (Isco, Inc., Type 6; Schmadzu, 5 mm path length; Beckman-Altex 152W, 8 µL micro-prep flow cell, 2 mm path; Pharmacia UV–1, 3 mm flow cell; LDC Milton-Roy UV–3, monitor #1203; or equivalent).

6.7.2 Reverse-phase high-performance liquid chromatograph.

6.7.2.1 Column oven and detector—Perkin-Elmer Model LC–65T (or equivalent) operated at 0.02 AUFS at 235 nm.

6.7.2.2 Injector—Rheodyne 7120 (or equivalent) with 50 µL sample loop.

6.7.2.3 Column—Two 6.2 mm × 250 mm Zorbax-ODS columns in series

(DuPont Instruments Division, Wilmington, DE, or equivalent), operated at 50°C with 2.0 mL/min methanol isocratic effluent.

6.7.2.4 Pump—Altex 110A (or equivalent).

6.7.3 Pipets.

6.7.3.1 Disposable, pasteur—150 mm long × 5-mm ID (Fisher Scientific 13–678–6A, or equivalent).

6.7.3.2 Disposable, serological—10 mL (6 mm ID).

6.7.4 Glass chromatographic columns.

6.7.4.1 150 mm long × 8-mm ID, (Kontes K–420155, or equivalent) with coarse-glass frit or glass-wool plug and 250 mL reservoir.

6.7.4.2 200 mm long × 15 mm ID, with coarse-glass frit or glass-wool plug and 250 mL reservoir.

6.7.4.3 300 mm long × 25 mm ID, with 300 mL reservoir and glass or fluoropolymer stopcock.

6.7.5 Stirring apparatus for batch silica cleanup of tissue extracts.

6.7.5.1 Mechanical stirrer—Corning Model 320, or equivalent.

6.7.5.2 Bottle—500–600 mL wide-mouth clear glass.

6.7.6 Oven—For baking and storage of adsorbents, capable of maintaining a constant temperature (±5°C) in the range of 105–250°C.

6.8 Concentration Apparatus.

6.8.1 Rotary evaporator—Buchi/Brinkman-American Scientific No. E5045–10 or equivalent, equipped with a variable temperature water bath.

6.8.1.1 Vacuum source for rotary evaporator equipped with shutoff valve at the evaporator and vacuum gauge.

6.8.1.2 A recirculating water pump and chiller are recommended, as use of tap water for cooling the evaporator wastes large volumes of water and can lead to inconsistent performance as water temperatures and pressures vary.

6.8.1.3 Round-bottom flask—100 mL and 500 mL or larger, with ground-glass fitting compatible with the rotary evaporator.

6.8.2 Kuderna-Danish (K–D) Concentrator.

6.8.2.1 Concentrator tube—10 mL, graduated (Kontes K–570050–1025, or equivalent) with calibration verified. Ground-glass stopper (size 19/22 joint) is used to prevent evaporation of extracts.

6.8.2.2 Evaporation flask—500 mL (Kontes K–570001–0500, or equivalent), attached to concentrator tube with springs (Kontes K–662750–0012 or equivalent).

6.8.2.3 Snyder column—Three-ball macro (Kontes K–503000–0232, or equivalent).

6.8.2.4 Boiling chips.

6.8.2.4.1 Glass or silicon carbide—Approximately 10/40 mesh, extracted with methylene chloride and baked at 450°C for one hour minimum.

6.8.2.4.2 Fluoropolymer (optional)—Extracted with methylene chloride.

6.8.2.5 Water bath—Heated, with concentric ring cover, capable of maintaining a temperature within ±2°C, installed in a fume hood.

6.8.3 Nitrogen blowdown apparatus—Equipped with water bath controlled in the range of 30–60°C (N-Evap, Organomation Associates, Inc., South Berlin, MA, or equivalent), installed in a fume hood.

6.8.4 Sample vials.

6.8.4.1 Amber glass—2–5 mL with fluoropolymer-lined screw-cap.

6.8.4.2 Glass—0.3 mL, conical, with fluoropolymer-lined screw or crimp cap.

6.9 Gas Chromatograph—Shall have splitless or on-column injection port for capillary column, temperature program with isothermal hold, and shall meet all of the performance specifications in Section 10.

6.9.1 GC column for CDDs/CDFs and for isomer specificity for 2,3,7,8-TCDD—60±5 m long × 0.32±0.02 mm ID; 0.25 µm 5% phenyl, 94% methyl, 1% vinyl silicone bonded-phase fused-silica capillary column (J&W DB–5, or equivalent).

6.9.2 GC column for isomer specificity for 2,3,7,8-TCDF—30±5 m long × 0.32±0.02 mm ID; 0.25 µm bonded-phase fused-silica capillary column (J&W DB–225, or equivalent).

6.10 Mass Spectrometer—28–40 eV electron impact ionization, shall be capable of repetitively selectively monitoring 12 exact m/z's minimum at high resolution (≥10,000) during a period of approximately one second, and shall meet all of the performance specifications in Section 10.

6.11 GC/MS Interface—The mass spectrometer (MS) shall be interfaced to the GC such that the end of the capillary column terminates within 1 cm of the ion source but does not intercept the electron or ion beams.

6.12 Data System—Capable of collecting, recording, and storing MS data.

7.0 Reagents and Standards

7.1 pH Adjustment and Back-Extraction.

7.1.1 Potassium hydroxide—Dissolve 20 g reagent grade KOH in 100 mL reagent water.

7.1.2 Sulfuric acid—Reagent grade (specific gravity 1.84).

7.1.3 Hydrochloric acid—Reagent grade, 6N.

7.1.4 Sodium chloride—Reagent grade, prepare at 5% (w/v) solution in reagent water.

7.2 Solution Drying and Evaporation.

7.2.1 Solution drying—Sodium sulfate, reagent grade, granular, anhydrous (Baker 3375, or equivalent), rinsed with methylene chloride (20 mL/g), baked at 400°C for one hour minimum, cooled in a dessicator, and stored in a pre-cleaned glass bottle with screw-cap that prevents moisture from entering. If, after heating, the sodium sulfate develops a noticeable grayish cast (due to the presence of carbon in the crystal matrix), that batch of reagent is not suitable for use and should be discarded. Extraction with methylene chloride (as opposed to simple rinsing) and baking at a lower temperature may produce sodium sulfate that is suitable for use.

7.2.2 Tissue drying—Sodium sulfate, reagent grade, powdered, treated and stored as above.

7.2.3 Prepurified nitrogen.

7.3 Extraction.

7.3.1 Solvents—Acetone, toluene, cyclohexane, hexane, methanol, methylene chloride, and nonane; distilled in glass, pesticide quality, lot-certified to be free of interferences.

7.3.2 White quartz sand, 60/70 mesh—For Soxhlet/Dean-Stark extraction (Aldrich Chemical, Cat. No. 27–437–9, or equivalent). Bake at 450°C for four hours minimum.

7.4 GPC Calibration Solution—Prepare a solution containing 300 mg/mL corn oil, 15 mg/mL bis(2-ethylhexyl) phthalate, 1.4 mg/mL pentachlorophenol, 0.1 mg/mL perylene, and 0.5 mg/mL sulfur.

7.5 Adsorbents for Sample Cleanup.

7.5.1 Silica gel.

7.5.1.1 Activated silica gel—100–200 mesh, Supelco 1–3651 (or equivalent), rinsed with methylene chloride, baked at 180°C for a minimum of one hour, cooled in a dessicator, and stored in a precleaned glass bottle with screw-cap that prevents moisture from entering.

7.5.1.2 Acid silica gel (30% w/w)—Thoroughly mix 44.0 g of concentrated sulfuric acid with 100.0 g of activated silica gel in a clean container. Break up aggregates with a stirring rod until a uniform mixture is obtained. Store in a bottle with a fluoropolymer-lined screw-cap.

7.5.1.3 Basic silica gel—Thoroughly mix 30 g of 1N sodium hydroxide with 100 g of activated silica gel in a clean container. Break up aggregates with a stirring rod until a uniform mixture is obtained. Store in a bottle with a fluoropolymer-lined screw-cap.

7.5.1.4 Potassium silicate.

7.5.1.4.1 Dissolve 56 g of high purity potassium hydroxide (Aldrich, or

equivalent) in 300 mL of methanol in a 750–1000 mL flat-bottom flask.

7.5.1.4.2 Add 100 g of silica gel and a stirring bar, and stir on a hot plate at 60–70°C for one to two hours.

7.5.1.4.3 Decant the liquid and rinse the potassium silicate twice with 100 mL portions of methanol, followed by a single rinse with 100 mL of methylene chloride.

7.5.1.4.4 Spread the potassium silicate on solvent-rinsed aluminum foil and dry for two to four hours in a hood.

7.5.1.4.5 Activate overnight at 200–250°C.

7.5.2 Alumina—Either one of two types of alumina, acid or basic, may be used in the cleanup of sample extracts, provided that the laboratory can meet the performance specifications for the recovery of labeled compounds described in Section 9.3. The same type of alumina must be used for all samples, including those used to demonstrate initial precision and recovery (Section 9.2) and ongoing precision and recovery (Section 15.5).

7.5.2.1 Acid alumina—Supelco 19996–6C (or equivalent). Activate by heating to 130°C for a minimum of 12 hours.

7.5.2.2 Basic alumina—Supelco 19944–6C (or equivalent). Activate by heating to 600°C for a minimum of 24 hours. Alternatively, activate by heating in a tube furnace at 650–700°C under an air flow rate of approximately 400 cc/minute. Do not heat over 700°C, as this can lead to reduced capacity for retaining the analytes. Store at 130°C in a covered flask. Use within five days of baking.

7.5.3 Carbon.

7.5.3.1 Carbopak C—(Supelco 1–0258, or equivalent).

7.5.3.2 Celite 545—(Supelco 2–0199, or equivalent).

7.5.3.3 Thoroughly mix 9.0 g Carbopak C and 41.0 g Celite 545 to produce an 18% w/w mixture. Activate the mixture at 130°C for a minimum of six hours. Store in a dessicator.

7.5.4 Anthropogenic isolation column—Pack the column in Section 6.7.4.3 from bottom to top with the following:

7.5.4.1 2 g silica gel (Section 7.5.1.1).

7.5.4.2 2 g potassium silicate (Section 7.5.1.4).

7.5.4.3 2 g granular anhydrous sodium sulfate (Section 7.2.1).

7.5.4.4 10 g acid silica gel (Section 7.5.1.2).

7.5.4.5 2 g granular anhydrous sodium sulfate.

7.5.5 Florisil column.

7.5.5.1 Florisil—60–100 mesh, Floridin Corp (or equivalent). Soxhlet extract in 500 g portions for 24 hours.

7.5.5.2 Insert a glass wool plug into the tapered end of a graduated serological pipet (Section 6.7.3.2). Pack with 1.5 g (approx 2 mL) of Florisil topped with approx 1 mL of sodium sulfate (Section 7.2.1) and a glass wool plug.

7.5.5.3 Activate in an oven at 130–150°C for a minimum of 24 hours and cool for 30 minutes. Use within 90 minutes of cooling.

7.6 Reference Matrices—Matrices in which the CDDs/CDFs and interfering compounds are not detected by this method.

7.6.1 Reagent water—Bottled water purchased locally, or prepared by passage through activated carbon.

7.6.2 High-solids reference matrix—Playground sand or similar material. Prepared by extraction with methylene chloride and/or baking at 450°C for a minimum of four hours.

7.6.3 Paper reference matrix—Glass-fiber filter, Gelman Type A, or equivalent. Cut paper to simulate the surface area of the paper sample being tested.

7.6.4 Tissue reference matrix—Corn or other vegetable oil. May be prepared by extraction with methylene chloride.

7.6.5 Other matrices—This method may be verified on any reference matrix by performing the tests given in Section 9.2. Ideally, the matrix should be free of the CDDs/CDFs, but in no case shall the background level of the CDDs/CDFs in the reference matrix exceed three times the minimum levels in Table 2. If low background levels of the CDDs/CDFs are present in the reference matrix, the spike level of the analytes used in Section 9.2 should be increased to provide a spike-to-background ratio in the range of 1:1 to 5:1 (Reference 15).

7.7 Standard Solutions—Purchased as solutions or mixtures with certification to their purity, concentration, and authenticity, or prepared from materials of known purity and composition. If the chemical purity is 98% or greater, the weight may be used without correction to compute the concentration of the standard. When not being used, standards are stored in the dark at room temperature in screw-capped vials with fluoropolymer-lined caps. A mark is placed on the vial at the level of the solution so that solvent loss by evaporation can be detected. If solvent loss has occurred, the solution should be replaced.

7.8 Stock Solutions.

7.8.1 Preparation—Prepare in nonane per the steps below or purchase as dilute solutions (Cambridge Isotope Laboratories (CIL), Woburn, MA, or equivalent). Observe the safety precautions in Section 5, and the recommendation in Section 5.1.2.

7.8.2 Dissolve an appropriate amount of assayed reference material in solvent. For example, weigh 1–2 mg of 2,3,7,8-TCDD to three significant figures in a 10 mL ground-glass-stoppered volumetric flask and fill to the mark with nonane. After the TCDD is completely dissolved, transfer the solution to a clean 15 mL vial with fluoropolymer-lined cap.

7.8.3 Stock standard solutions should be checked for signs of degradation prior to the preparation of calibration or performance test standards. Reference standards that can be used to determine the accuracy of calibration standards are available from CIL and may be available from other vendors.

7.9 PAR Stock Solution

7.9.1 All CDDs/CDFs—Using the solutions in Section 7.8, prepare the PAR stock solution to contain the CDDs/CDFs at the concentrations shown in Table 3. When diluted, the solution will become the PAR (Section 7.14).

7.9.2 If only 2,3,7,8-TCDD and 2,3,7,8-TCDF are to be determined, prepare the PAR stock solution to contain these compounds only.

7.10 Labeled-Compound Spiking Solution.

7.10.1 All CDDs/CDFs—From stock solutions, or from purchased mixtures, prepare this solution to contain the labeled compounds in nonane at the concentrations shown in Table 3. This solution is diluted with acetone prior to use (Section 7.10.3).

7.10.2 If only 2,3,7,8-TCDD and 2,3,7,8-TCDF are to be determined, prepare the labeled-compound solution to contain these compounds only. This solution is diluted with acetone prior to use (Section 7.10.3).

7.10.3 Dilute a sufficient volume of the labeled compound solution (Section 7.10.1 or 7.10.2) by a factor of 50 with acetone to prepare a diluted spiking solution. Each sample requires 1.0 mL of the diluted solution, but no more solution should be prepared than can be used in one day.

7.11 Cleanup Standard—Prepare $^{37}Cl^{4}$-2,3,7,8-TCDD in nonane at the concentration shown in Table 3. The cleanup standard is added to all extracts prior to cleanup to measure the efficiency of the cleanup process.

7.12 Internal Standard(s).

7.12.1 All CDDs/CDFs—Prepare the internal standard solution to contain $^{13}C^{12}$-1,2,3,4-TCDD and $^{13}C^{12}$-1,2,3,7,8,9-HxCDD in nonane at the concentration shown in Table 3.

7.12.2 If only 2,3,7,8-TCDD and 2,3,7,8-TCDF are to be determined,

prepare the internal standard solution to contain $^{13}C_{12}$–1,2,3,4-TCDD only.

7.13 Calibration Standards (CS1 through CS5)—Combine the solutions in Sections 7.9 through 7.12 to produce the five calibration solutions shown in Table 4 in nonane. These solutions permit the relative response (labeled to native) and response factor to be measured as a function of concentration. The CS3 standard is used for calibration verification (VER). If only 2,3,7,8-TCDD and 2,3,7,8-TCDF are to be determined, combine the solutions appropriate to these compounds.

7.14 Precision and Recovery (PAR) Standard—Used for determination of initial (Section 9.2) and ongoing (Section 15.5) precision and recovery. Dilute 10 µL of the precision and recovery standard (Section 7.9.1 or 7.9.2) to 2.0 mL with acetone for each sample matrix for each sample batch. One mL each are required for the blank and OPR with each matrix in each batch.

7.15 GC Retention Time Window Defining Solution and Isomer Specificity Test Standard—Used to define the beginning and ending retention times for the dioxin and furan isomers and to demonstrate isomer specificity of the GC columns employed for determination of 2,3,7,8-TCDD and 2,3,7,8-TCDF. The standard must contain the compounds listed in Table 5 (CIL EDF—4006, or equivalent), at a minimum. It is not necessary to monitor the window-defining compounds if only 2,3,7,8-TCDD and 2,3,7,8-TCDF are to be determined. In this case, an isomer-specificity test standard containing the most closely eluted isomers listed in Table 5 (CIL EDF-4033, or equivalent) may be used.

7.16 QC Check Sample—A QC Check Sample should be obtained from a source independent of the calibration standards. Ideally, this check sample would be a certified reference material containing the CDDs/CDFs in known concentrations in a sample matrix similar to the matrix under test.

7.17 Stability of Solutions—Standard solutions used for quantitative purposes (Sections 7.9 through 7.15) should be analyzed periodically, and should be assayed against reference standards (Section 7.8.3) before further use.

8.0 Sample Collection, Preservation, Storage, and Holding Times

8.1 Collect samples in amber glass containers following conventional sampling practices (Reference 16). Aqueous samples that flow freely are collected in refrigerated bottles using automatic sampling equipment. Solid samples are collected as grab samples using wide-mouth jars.

8.2 Maintain aqueous samples in the dark at 0–4°C from the time of collection until receipt at the laboratory. If residual chlorine is present in aqueous samples, add 80 mg sodium thiosulfate per liter of water. EPA Methods 330.4 and 330.5 may be used to measure residual chlorine (Reference 17). If sample pH is greater than 9, adjust to pH 7–9 with sulfuric acid.

Maintain solid, semi-solid, oily, and mixed-phase samples in the dark at <4°C from the time of collection until receipt at the laboratory.

Store aqueous samples in the dark at 0–4°C. Store solid, semi-solid, oily, mixed-phase, and tissue samples in the dark at < − 10°C.

8.3 Fish and Tissue Samples.

8.3.1 Fish may be cleaned, filleted, or processed in other ways in the field, such that the laboratory may expect to receive whole fish, fish fillets, or other tissues for analysis.

8.3.2 Fish collected in the field should be wrapped in aluminum foil, and must be maintained at a temperature less than 4°C from the time of collection until receipt at the laboratory.

8.3.3 Samples must be frozen upon receipt at the laboratory and maintained in the dark at < − 10°C until prepared. Maintain unused sample in the dark at < − 10°C.

8.4 Holding Times.

8.4.1 There are no demonstrated maximum holding times associated with CDDs/CDFs in aqueous, solid, semi-solid, tissues, or other sample matrices. If stored in the dark at 0–4°C and preserved as given above (if required), aqueous samples may be stored for up to one year. Similarly, if stored in the dark at < − 10°C, solid, semi-solid, multi-phase, and tissue samples may be stored for up to one year.

8.4.2 Store sample extracts in the dark at < − 10°C until analyzed. If stored in the dark at < − 10°C, sample extracts may be stored for up to one year.

9.0 Quality Assurance/Quality Control

9.1 Each laboratory that uses this method is required to operate a formal quality assurance program (Reference 18). The minimum requirements of this program consist of an initial demonstration of laboratory capability, analysis of samples spiked with labeled compounds to evaluate and document data quality, and analysis of standards and blanks as tests of continued performance. Laboratory performance is compared to established performance criteria to determine if the results of analyses meet the performance characteristics of the method.

If the method is to be applied to sample matrix other than water (e.g., soils, filter cake, compost, tissue) the most appropriate alternate matrix (Sections 7.6.2 through 7.6.5) is substituted for the reagent water matrix (Section 7.6.1) in all performance tests.

9.1.1 The analyst shall make an initial demonstration of the ability to generate acceptable accuracy and precision with this method. This ability is established as described in Section 9.2.

9.1.2 In recognition of advances that are occurring in analytical technology, and to allow the analyst to overcome sample matrix interferences, the analyst is permitted certain options to improve separations or lower the costs of measurements. These options include alternate extraction, concentration, cleanup procedures, and changes in columns and detectors. Alternate determinative techniques, such as the substitution of spectroscopic or immuno-assay techniques, and changes that degrade method performance, are not allowed. If an analytical technique other than the techniques specified in this method is used, that technique must have a specificity equal to or better than the specificity of the techniques in this method for the analytes of interest.

9.1.2.1 Each time a modification is made to this method, the analyst is required to repeat the procedure in Section 9.2. If the detection limit of the method will be affected by the change, the laboratory is required to demonstrate that the MDL (40 CFR Part 136, Appendix B) is lower than one-third the regulatory compliance level or one-third the ML in this method, whichever is higher. If calibration will be affected by the change, the analyst must recalibrate the instrument per Section 10.

9.1.2.2 The laboratory is required to maintain records of modifications made to this method. These records include the following, at a minimum:

9.1.2.2.1 The names, titles, addresses, and telephone numbers of the analyst(s) who performed the analyses and modification, and of the quality control officer who witnessed and will verify the analyses and modifications.

9.1.2.2.2 A listing of pollutant(s) measured, by name and CAS Registry number.

9.1.2.2.3 A narrative stating reason(s) for the modifications.

9.1.2.2.4 Results from all quality control (QC) tests comparing the modified method to this method, including:

(a) Calibration (Section 10.5 through 10.7).

(b) Calibration verification (Section 15.3).

(c) Initial precision and recovery (Section 9.2).

(d) Labeled compound recovery (Section 9.3).

(e) Analysis of blanks (Section 9.5).

(f) Accuracy assessment (Section 9.4).

9.1.2.2.5 Data that will allow an independent reviewer to validate each determination by tracing the instrument output (peak height, area, or other signal) to the final result. These data are to include:

(a) Sample numbers and other identifiers.

(b) Extraction dates.

(c) Analysis dates and times.

(d) Analysis sequence/run chronology.

(e) Sample weight or volume (Section 11).

(f) Extract volume prior to each cleanup step (Section 13).

(g) Extract volume after each cleanup step (Section 13).

(h) Final extract volume prior to injection (Section 14).

(i) Injection volume (Section 14.3).

(j) Dilution data, differentiating between dilution of a sample or extract (Section 17.5).

(k) Instrument and operating conditions.

(l) Column (dimensions, liquid phase, solid support, film thickness, etc).

(m) Operating conditions (temperatures, temperature program, flow rates).

(n) Detector (type, operating conditions, etc).

(o) Chromatograms, printer tapes, and other recordings of raw data.

(p) Quantitation reports, data system outputs, and other data to link the raw data to the results reported.

9.1.3 Analyses of method blanks are required to demonstrate freedom from contamination (Section 4.3). The procedures and criteria for analysis of a method blank are described in Sections 9.5 and 15.6.

9.1.4 The laboratory shall spike all samples with labeled compounds to monitor method performance. This test is described in Section 9.3. When results of these spikes indicate atypical method performance for samples, the samples are diluted to bring method performance within acceptable limits. Procedures for dilution are given in Section 17.5.

9.1.5 The laboratory shall, on an ongoing basis, demonstrate through calibration verification and the analysis of the ongoing precision and recovery aliquot that the analytical system is in control. These procedures are described in Sections 15.1 through 15.5.

9.1.6 The laboratory shall maintain records to define the quality of data that is generated. Development of accuracy statements is described in Section 9.4.

9.2 Initial Precision and Recovery (IPR)—To establish the ability to generate acceptable precision and recovery, the analyst shall perform the following operations.

9.2.1 For low solids (aqueous) samples, extract, concentrate, and analyze four 1 L aliquots of reagent water spiked with the diluted labeled compound spiking solution (Section 7.10.3) and the precision and recovery standard (Section 7.14) according to the procedures in Sections 11 through 18. For an alternative sample matrix, four aliquots of the alternative reference matrix (Section 7.6) are used. All sample processing steps that are to be used for processing samples, including preparation (Section 11), extraction (Section 12), and cleanup (Section 13), shall be included in this test.

9.2.2 Using results of the set of four analyses, compute the average concentration (X) of the extracts in ng/mL and the standard deviation of the concentration (s) in ng/mL for each compound, by isotope dilution for CDDs/CDFs with a labeled analog, and by internal standard for 1,2,3,7,8,9-HxCDD, OCDF, and the labeled compounds.

9.2.3 For each CDD/CDF and labeled compound, compare s and X with the corresponding limits for initial precision and recovery in Table 6. If only 2,3,7,8-TCDD and 2,3,7,8-TCDF are to be determined, compare s and X with the corresponding limits for initial precision and recovery in Table 6a. If s and X for all compounds meet the acceptance criteria, system performance is acceptable and analysis of blanks and samples may begin. If, however, any individual s exceeds the precision limit or any individual X falls outside the range for accuracy, system performance is unacceptable for that compound. Correct the problem and repeat the test (Section 9.2).

9.3 The laboratory shall spike all samples with the diluted labeled compound spiking solution (Section 7.10.3) to assess method performance on the sample matrix.

9.3.1 Analyze each sample according to the procedures in Sections 11 through 18.

9.3.2 Compute the percent recovery of the labeled compounds and the cleanup standard using the internal standard method (Section 17.2).

9.3.3 The recovery of each labeled compound must be within the limits in Table 7 when all 2,3,7,8-substituted CDDs/CDFs are determined, and within the limits in Table 7a when only 2,3,7,8-TCDD and 2,3,7,8-TCDF are determined. If the recovery of any compound falls outside of these limits, method performance is unacceptable for that compound in that sample. To overcome such difficulties, water samples are diluted and smaller amounts of soils, sludges, sediments, and other matrices are reanalyzed per Section 18.4.

9.4 Recovery of labeled compounds from samples should be assessed and records should be maintained.

9.4.1 After the analysis of five samples of a given matrix type (water, soil, sludge, pulp, etc.) for which the labeled compounds pass the tests in Section 9.3, compute the average percent recovery (R) and the standard deviation of the percent recovery (SR) for the labeled compounds only. Express the assessment as a percent recovery interval from $R-2S_R$ to $R+2S_R$ for each matrix. For example, if R = 90% and S_R = 10% for five analyses of pulp, the recovery interval is expressed as 70–110%.

9.4.2 Update the accuracy assessment for each labeled compound in each matrix on a regular basis (e.g., after each 5–10 new measurements).

9.5 Method Blanks—Reference matrix method blanks are analyzed to demonstrate freedom from contamination (Section 4.3).

9.5.1 Prepare, extract, clean up, and concentrate a method blank with each sample batch (samples of the same matrix started through the extraction process on the same 12-hour shift, to a maximum of 20 samples). The matrix for the method blank shall be similar to sample matrix for the batch, e.g., a 1 L reagent water blank (Section 7.6.1), high-solids reference matrix blank (Section 7.6.2), paper matrix blank (Section 7.6.3); tissue blank (Section 7.6.4) or alternative reference matrix blank (Section 7.6.5). Analyze the blank immediately after analysis of the OPR (Section 15.5) to demonstrate freedom from contamination.

9.5.2 If any 2,3,7,8-substituted CDD/CDF (Table 1) is found in the blank at greater than the minimum level (Table 2) or one-third the regulatory compliance level, whichever is greater; or if any potentially interfering compound is found in the blank at the minimum level for each level of chlorination given in Table 2 (assuming a response factor of 1 relative to the $^{13}C_{12}$-1,2,3,4-TCDD internal standard for compounds not listed in Table 1), analysis of samples is halted until the blank associated with the sample batch shows no evidence of contamination at

this level. All samples must be associated with an uncontaminated method blank before the results for those samples may be reported for regulatory compliance purposes.

9.6 QC Check Sample—Analyze the QC Check Sample (Section 7.16) periodically to assure the accuracy of calibration standards and the overall reliability of the analytical process. It is suggested that the QC Check Sample be analyzed at least quarterly.

9.7 The specifications contained in this method can be met if the apparatus used is calibrated properly and then maintained in a calibrated state. The standards used for calibration (Section 10), calibration verification (Section 15.3), and for initial (Section 9.2) and ongoing (Section 15.5) precision and recovery should be identical, so that the most precise results will be obtained. A GC/MS instrument will provide the most reproducible results if dedicated to the settings and conditions required for the analyses of CDDs/CDFs by this method.

9.8 Depending on specific program requirements, field replicates may be collected to determine the precision of the sampling technique, and spiked samples may be required to determine the accuracy of the analysis when the internal standard method is used.

10.0 Calibration

10.1 Establish the operating conditions necessary to meet the minimum retention times for the internal standards in Section 10.2.4 and the relative retention times for the CDDs/CDFs in Table 2.

10.1.1 Suggested GC operating conditions:

Injector temperature: 270°C
Interface temperature: 290°C
Initial temperature: 200°C
Initial time: Two minutes
Temperature program:
200–220°C, at 5°C/minute
220°C for 16 minutes
220–235°C, at 5°C/minute
235°C for seven minutes
235–330°C, at 5°C/minute

Note: All portions of the column that connect the GC to the ion source shall remain at or above the interface temperature specified above during analysis to preclude condensation of less volatile compounds.

Optimize GC conditions for compound separation and sensitivity. Once optimized, the same GC conditions must be used for the analysis of all standards, blanks, IPR and OPR aliquots, and samples.

10.1.2 Mass spectrometer (MS) resolution—Obtain a selected ion current profile (SICP) of each analyte in Table 3 at the two exact m/z's specified in Table 8 and at ≥10,000 resolving power by injecting an authentic standard of the CDDs/CDFs either singly or as part of a mixture in which there is no interference between closely eluted components.

10.1.2.1 The analysis time for CDDs/CDFs may exceed the long-term mass stability of the mass spectrometer. Because the instrument is operated in the high-resolution mode, mass drifts of a few ppm (e.g., 5 ppm in mass) can have serious adverse effects on instrument performance. Therefore, a mass-drift correction is mandatory and a lock-mass m/z from PFK is used for drift correction. The lock-mass m/z is dependent on the exact m/z's monitored within each descriptor, as shown in Table 8. The level of PFK metered into the HRMS during analyses should be adjusted so that the amplitude of the most intense selected lock-mass m/z signal (regardless of the descriptor number) does not exceed 10% of the full-scale deflection for a given set of detector parameters. Under those conditions, sensitivity changes that might occur during the analysis can be more effectively monitored.

Note: Excessive PFK (or any other reference substance) may cause noise problems and contamination of the ion source necessitating increased frequency of source cleaning.

10.1.2.2 If the HRMS has the capability to monitor resolution during the analysis, it is acceptable to terminate the analysis when the resolution falls below 10,000 to save reanalysis time.

10.1.2.3 Using a PFK molecular leak, tune the instrument to meet the minimum required resolving power of 10,000 (10% valley) at m/z 304.9824 (PFK) or any other reference signal close to m/z 304 (from TCDF). For each descriptor (Table 8), monitor and record the resolution and exact m/z's of three to five reference peaks covering the mass range of the descriptor. The resolution must be greater than or equal to 10,000, and the deviation between the exact m/z and the theoretical m/z (Table 8) for each exact m/z monitored must be less than 5 ppm.

10.2 Ion Abundance Ratios, Minimum Levels, Signal-to-Noise Ratios, and Absolute Retention Times—Choose an injection volume of either 1 µL or 2 µL, consistent with the capability of the HRGC/HRMS instrument. Inject a 1 µL or 2 µL aliquot of the CS1 calibration solution (Table 4) using the GC conditions from Section 10.1.1. If only 2,3,7,8-TCDD and 2,3,7,8-TCDF are to be determined, the operating conditions and specifications below apply to analysis of those compounds only.

10.2.1 Measure the SICP areas for each analyte, and compute the ion abundance ratios at the exact m/z's specified in Table 8. Compare the computed ratio to the theoretical ratio given in Table 9.

10.2.1.1 The exact m/z's to be monitored in each descriptor are shown in Table 8. Each group or descriptor shall be monitored in succession as a function of GC retention time to ensure that all CDDs/CDFs are detected. Additional m/z's may be monitored in each descriptor, and the m/z's may be divided among more than the five descriptors listed in Table 8, provided that the laboratory is able to monitor the m/z's of all the CDDs/CDFs that may elute from the GC in a given retention-time window. If only 2,3,7,8-TCDD and 2,3,7,8-TCDF are to be determined, the descriptors may be modified to include only the exact m/z's for the tetra-and penta-isomers, the diphenyl ethers, and the lock m/z's.

10.2.1.2 The mass spectrometer shall be operated in a mass-drift correction mode, using perfluorokerosene (PFK) to provide lock m/z's. The lock-mass for each group of m/z's is shown in Table 8. Each lock mass shall be monitored and shall not vary by more than ±20% throughout its respective retention time window. Variations of the lock mass by more than 20% indicate the presence of coeluting interferences that may significantly reduce the sensitivity of the mass spectrometer. Reinjection of another aliquot of the sample extract will not resolve the problem. Additional cleanup of the extract may be required to remove the interferences.

10.2.2 All CDDs/CDFs and labeled compounds in the CS1 standard shall be within the QC limits in Table 9 for their respective ion abundance ratios; otherwise, the mass spectrometer shall be adjusted and this test repeated until the m/z ratios fall within the limits specified. If the adjustment alters the resolution of the mass spectrometer, resolution shall be verified (Section 10.1.2) prior to repeat of the test.

10.2.3 Verify that the HRGC/HRMS instrument meets the minimum levels in Table 2. The peaks representing the CDDs/CDFs and labeled compounds in the CS1 calibration standard must have signal-to-noise ratios (S/N) greater than or equal to 10.0. Otherwise, the mass spectrometer shall be adjusted and this test repeated until the minimum levels in Table 2 are met.

10.2.4 The absolute retention time of $^{13}C_{12}$-1,2,3,4–TCDD (Section 7.12) shall exceed 25.0 minutes on the DB–5 column, and the retention time of $^{13}C_{12}$-

1,2,3,4–TCDD shall exceed 15.0 minutes on the DB–225 column; otherwise, the GC temperature program shall be adjusted and this test repeated until the above-stated minimum retention time criteria are met.

10.3 Retention-Time Windows—Analyze the window defining mixtures (Section 7.15) using the optimized temperature program in Section 10.1. Table 5 gives the elution order (first/last) of the window-defining compounds. If 2,3,7,8-TCDD and 2,3,7,8-TCDF only are to be analyzed, this test is not required.

10.4 Isomer Specificity.

10.4.1 Analyze the isomer specificity test standards (Section 7.15) using the procedure in Section 14 and the optimized conditions for sample analysis (Section 10.1.1).

10.4.2 Compute the percent valley between the GC peaks that elute most closely to the 2,3,7,8-TCDD and TCDF isomers, on their respective columns, per Figures 6 and 7.

10.4.3 Verify that the height of the valley between the most closely eluted isomers and the 2,3,7,8-substituted isomers is less than 25% (computed as 100 x/y in Figures 6 and 7). If the valley exceeds 25%, adjust the analytical conditions and repeat the test or replace the GC column and recalibrate (Sections 10.1.2 through 10.7).

10.5 Calibration by Isotope Dilution—Isotope dilution calibration is used for the 15 2,3,7,8-substituted CDDs/CDFs for which labeled compounds are added to samples prior to extraction. The reference compound for each CDD/CDF compound is shown in Table 2.

10.5.1 A calibration curve encompassing the concentration range is prepared for each compound to be determined. The relative response (RR) (labeled to native) vs. concentration in standard solutions is plotted or computed using a linear regression. Relative response is determined according to the procedures described below. Five calibration points are employed.

10.5.2 The response of each CDD/CDF relative to its labeled analog is determined using the area responses of both the primary and secondary exact m/z's specified in Table 8, for each calibration standard, as follows:

$$RR = \frac{(A1_n + A2_n)\,C_l}{(A1_l + A2_l)\,C_n}$$

Where:

$A1_n$ and $A2_n$ = The areas of the primary and secondary m/z's for the CDD/CDF.

$A1_l$ and $A2_l$ = The areas of the primary and secondary m/z's for the labeled compound.

C_l = The concentration of the labeled compound in the calibration standard (Table 4).

C_n = The concentration of the native compound in the calibration standard (Table 4).

10.5.3 To calibrate the analytical system by isotope dilution, inject a volume of calibration standards CS1 through CS5 (Section 7.13 and Table 4) identical to the volume chosen in Section 10.2, using the procedure in Section 14 and the conditions in Section 10.1.1 and Table 2. Compute the relative response (RR) at each concentration.

10.5.4 Linearity—If the relative response for any compound is constant (less than 20% coefficient of variation) over the five-point calibration range, an averaged relative response may be used for that compound; otherwise, the complete calibration curve for that compound shall be used over the five-point calibration range.

10.6 Calibration by Internal Standard—The internal standard method is applied to determination of 1,2,3,7,8,9-HxCDD (Section 17.1.2), OCDF (Section 17.1.1), the non 2,3,7,8-substituted compounds, and to the determination of labeled compounds for intralaboratory statistics (Sections 9.4 and 15.5.4).

10.6.1 Response factors—Calibration requires the determination of response factors (RF) defined by the following equation:

$$RF = \frac{(A1_s + A2_s)\,C_{is}}{(A1_{is} + A2_{is})\,C_s}$$

Where:

$A1_s$ and $A2_s$ = The areas of the primary and secondary m/z's for the CDD/CDF.

$A1_{is}$ and $A2_{is}$ = The areas of the primary and secondary m/z's for the internal standard.

C_{is} = The concentration of the internal standard (Table 4).

C_s = The concentration of the compound in the calibration standard (Table 4).

Note: There is only one m/z for $^{37}Cl_4$-2,3,7,8-TCDD. See Table 8.

10.6.2 To calibrate the analytical system by internal standard, inject 1.0 µL or 2.0 µL of calibration standards CS1 through CS5 (Section 7.13 and Table 4) using the procedure in Section 14 and the conditions in Section 10.1.1 and Table 2. Compute the response factor (RF) at each concentration.

10.6.3 Linearity—If the response factor (RF) for any compound is constant (less than 35% coefficient of variation) over the five-point calibration range, an averaged response factor may be used for that compound; otherwise, the complete calibration curve for that compound shall be used over the five-point range.

10.7 Combined Calibration—By using calibration solutions (Section 7.13 and Table 4) containing the CDDs/CDFs and labeled compounds and the internal standards, a single set of analyses can be used to produce calibration curves for the isotope dilution and internal standard methods. These curves are verified each shift (Section 15.3) by analyzing the calibration verification standard (VER, Table 4). Recalibration is required if any of the calibration verification criteria (Section 15.3) cannot be met.

10.8 Data Storage—MS data shall be collected, recorded, and stored.

10.8.1 Data acquisition—The signal at each exact m/z shall be collected repetitively throughout the monitoring period and stored on a mass storage device.

10.8.2 Response factors and multipoint calibrations—The data system shall be used to record and maintain lists of response factors (response ratios for isotope dilution) and multipoint calibration curves. Computations of relative standard deviation (coefficient of variation) shall be used to test calibration linearity. Statistics on initial performance (Section 9.2) and ongoing performance (Section 15.5) should be computed and maintained, either on the instrument data system, or on a separate computer system.

11.0 Sample Preparation

11.1 Sample preparation involves modifying the physical form of the sample so that the CDDs/CDFs can be extracted efficiently. In general, the samples must be in a liquid form or in the form of finely divided solids in order for efficient extraction to take place. Table 10 lists the phases and suggested quantities for extraction of various sample matrices.

For samples known or expected to contain high levels of the CDDs/CDFs, the smallest sample size representative of the entire sample should be used (see Section 17.5).

For all samples, the blank and IPR/OPR aliquots must be processed through the same steps as the sample to check for contamination and losses in the preparation processes.

11.1.1 For samples that contain particles, percent solids and particle size are determined using the procedures in Sections 11.2 and 11.3, respectively.

11.1.2 Aqueous samples—Because CDDs/CDFs may be bound to suspended

particles, the preparation of aqueous samples is dependent on the solids content of the sample.

11.1.2.1 Aqueous samples visibly absent particles are prepared per Section 11.4 and extracted directly using the separatory funnel or SPE techniques in Sections 12.1 or 12.2, respectively.

11.1.2.2 Aqueous samples containing visible particles and containing one percent suspended solids or less are prepared using the procedure in Section 11.4. After preparation, the sample is extracted directly using the SPE technique in 12.2 or filtered per Section 11.4.3. After filtration, the particles and filter are extracted using the SDS procedure in Section 12.3 and the filtrate is extracted using the separatory funnel procedure in Section 12.1.

11.1.2.3 For aqueous samples containing greater than one percent solids, a sample aliquot sufficient to provide 10 g of dry solids is used, as described in Section 11.5.

11.1.3 Solid samples are prepared using the procedure described in Section 11.5 followed by extraction via the SDS procedure in Section 12.3.

11.1.4 Multiphase samples—The phase(s) containing the CDDs/CDFs is separated from the non-CDD/CDF phase using pressure filtration and centrifugation, as described in Section 11.6. The CDDs/CDFs will be in the organic phase in a multiphase sample in which an organic phase exists.

11.1.5 Procedures for grinding, homogenization, and blending of various sample phases are given in Section 11.7.

11.1.6 Tissue samples—Preparation procedures for fish and other tissues are given in Section 11.8.

11.2 Determination of Percent Suspended Solids.

Note: This aliquot is used for determining the solids content of the sample, not for determination of CDDs/CDFs.

11.2.1 Aqueous liquids and multi-phase samples consisting of mainly an aqueous phase.

11.2.1.1 Dessicate and weigh a GF/D filter (Section 6.5.3) to three significant figures.

$$\%\ \text{solids} = \frac{\text{weight of sample aliquot after drying (g)} - \text{weight of filter (g)}}{10\ \text{g}} \times 100$$

11.2.1.2 Filter 10.0±0.02 mL of well-mixed sample through the filter.

11.2.1.3 Dry the filter a minimum of 12 hours at 110±5•Ψ ανδ ψοολ ιν α δεσσιψατορ.

11.2.1.4 Calculate percent solids as follows:

$$\%\ \text{solids} = \frac{\text{weight of sample aliquot after drying (g)} - \text{weight of filter (g)}}{10\ \text{g}} \times 100$$

11.2.2 Non-aqueous liquids, solids, semi-solid samples, and multi-phase samples in which the main phase is not aqueous; but not tissues.

11.2.2.1 Weigh 5–10 g of sample to three significant figures in a tared beaker.

11.2.2.2 Dry a minimum of 12 hours at 110±5°C, and cool in a dessicator.

11.2.2.3 Calculate percent solids as follows:

$$\%\ \text{solids} = \frac{\text{weight of sample aliquot after drying}}{\text{weight of sample aliquot before drying}} \times 100$$

11.3 Determination of Particle Size.

11.3.1 Spread the dried sample from Section 11.2.2.2 on a piece of filter paper or aluminum foil in a fume hood or glove box.

11.3.2 Estimate the size of the particles in the sample. If the size of the largest particles is greater than 1 mm, the particle size must be reduced to 1 mm or less prior to extraction using the procedures in Section 11.7.

11.4 Preparation of Aqueous Samples Containing 1% Suspended Solids or Less.

11.4.1 Aqueous samples visibly absent particles are prepared per the procedure below and extracted directly using the separatory funnel or SPE techniques in Sections 12.1 or 12.2, respectively. Aqueous samples containing visible particles and one percent suspended solids or less are prepared using the procedure below and extracted using either the SPE technique in Section 12.2 or further prepared using the filtration procedure in Section 11.4.3. The filtration procedure is followed by SDS extraction of the filter and particles (Section 12.3) and separatory funnel extraction of the filtrate (Section 12.1). The SPE procedure is followed by SDS extraction of the filter and disk.

11.4.2 Preparation of sample and QC aliquots.

11.4.2.1 Mark the original level of the sample on the sample bottle for reference. Weigh the sample plus bottle to ± 1.

11.4.2.2 Spike 1.0 mL of the diluted labeled-compound spiking solution (Section 7.10.3) into the sample bottle. Cap the bottle and mix the sample by careful shaking. Allow the sample to equilibrate for one to two hours, with occasional shaking.

11.4.2.3 For each sample or sample batch (to a maximum of 20 samples) to be extracted during the same 12-hour shift, place two 1.0 L aliquots of reagent water in clean sample bottles or flasks.

11.4.2.4 Spike 1.0 mL of the diluted labeled-compound spiking solution (Section 7.10.3) into both reagent water aliquots. One of these aliquots will serve as the method blank.

11.4.2.5 Spike 1.0 mL of the PAR standard (Section 7.14) into the remaining reagent water aliquot. This aliquot will serve as the OPR (Section 15.5).

11.4.2.6 If SPE is to be used, add 5 mL of methanol to the sample, cap and shake the sample to mix thoroughly, and proceed to Section 12.2 for extraction. If SPE is not to be used, and the sample is visibly absent particles, proceed to Section 12.1 for extraction. If SPE is not to be used and the sample

contains visible particles, proceed to the following section for filtration of particles.

11.4.3 Filtration of particles.

11.4.3.1 Assemble a Buchner funnel (Section 6.5.5) on top of a clean filtration flask. Apply vacuum to the flask, and pour the entire contents of the sample bottle through a glass-fiber filter (Section 6.5.6) in the Buchner funnel, swirling the sample remaining in the bottle to suspend any particles.

11.4.3.2 Rinse the sample bottle twice with approximately 5 mL portions of reagent water to transfer any remaining particles onto the filter.

11.4.3.3 Rinse any particles off the sides of the Buchner funnel with small quantities of reagent water.

11.4.3.4 Weigh the empty sample bottle to ±1 g. Determine the weight of the sample by difference. Save the bottle for further use.

11.4.3.5 Extract the filtrate using the separatory funnel procedure in Section 12.1.

11.4.3.6 Extract the filter containing the particles using the SDS procedure in Section 12.3.

11.5 Preparation of Samples Containing Greater Than 1% Solids.

11.5.1 Weigh a well-mixed aliquot of each sample (of the same matrix type) sufficient to provide 10 g of dry solids (based on the solids determination in Section 11.2) into a clean beaker or glass jar.

11.5.2 Spike 1.0 mL of the diluted labeled compound spiking solution (Section 7.10.3) into the sample.

11.5.3 For each sample or sample batch (to a maximum of 20 samples) to be extracted during the same 12-hour shift, weigh two 10 g aliquots of the appropriate reference matrix (Section 7.6) into clean beakers or glass jars.

11.5.4 Spike 1.0 mL of the diluted labeled compound spiking solution (Section 7.10.3) into each reference matrix aliquot. One aliquot will serve as the method blank. Spike 1.0 mL of the PAR standard (Section 7.14) into the other reference matrix aliquot. This aliquot will serve as the OPR (Section 15.5).

11.5.5 Stir or tumble and equilibrate the aliquots for one to two hours.

11.5.6 Decant excess water. If necessary to remove water, filter the sample through a glass-fiber filter and discard the aqueous liquid.

11.5.7 If particles >1mm are present in the sample (as determined in Section 11.3.2), spread the sample on clean aluminum foil in a hood. After the sample is dry, grind to reduce the particle size (Section 11.7).

11.5.8 Extract the sample and QC aliquots using the SDS procedure in Section 12.3.

11.6 Multiphase Samples.

11.6.1 Using the percent solids determined in Section 11.2.1 or 11.2.2, determine the volume of sample that will provide 10 g of solids, up to 1 L of sample.

11.6.2 Pressure filter the amount of sample determined in Section 11.6.1 through Whatman GF/D glass-fiber filter paper (Section 6.5.3). Pressure filter the blank and OPR aliquots through GF/D papers also. If necessary to separate the phases and/or settle the solids, centrifuge these aliquots prior to filtration.

11.6.3 Discard any aqueous phase (if present). Remove any non-aqueous liquid present and reserve the maximum amount filtered from the sample (Section 11.6.1) or 10 g, whichever is less, for combination with the solid phase (Section 12.3.5).

11.6.4 If particles >1mm are present in the sample (as determined in Section 11.3.2) and the sample is capable of being dried, spread the sample and QC aliquots on clean aluminum foil in a hood. After the aliquots are dry or if the sample cannot be dried, reduce the particle size using the procedures in Section 11.7 and extract the reduced particles using the SDS procedure in Section 12.3. If particles >1mm are not present, extract the particles and filter in the sample and QC aliquots directly using the SDS procedure in Section 12.3.

11.7 Sample grinding, homogenization, or blending—Samples with particle sizes greater than 1 mm (as determined in Section 11.3.2) are subjected to grinding, homogenization, or blending. The method of reducing particle size to less than 1 mm is matrix-dependent. In general, hard particles can be reduced by grinding with a mortar and pestle. Softer particles can be reduced by grinding in a Wiley mill or meat grinder, by homogenization, or in a blender.

11.7.1 Each size-reducing preparation procedure on each matrix shall be verified by running the tests in Section 9.2 before the procedure is employed routinely.

11.7.2 The grinding, homogenization, or blending procedures shall be carried out in a glove box or fume hood to prevent particles from contaminating the work environment.

11.7.3 Grinding—Certain papers and pulps, slurries, and amorphous solids can be ground in a Wiley mill or heavy duty meat grinder. In some cases, reducing the temperature of the sample to freezing or to dry ice or liquid nitrogen temperatures can aid in the grinding process. Grind the sample aliquots from Section 11.5.7 or 11.6.4 in a clean grinder. Do not allow the sample temperature to exceed 50 °C. Grind the blank and reference matrix aliquots using a clean grinder.

11.7.4 Homogenization or blending—Particles that are not ground effectively, or particles greater than 1 mm in size after grinding, can often be reduced in size by high speed homogenization or blending. Homogenize and/or blend the particles or filter from Section 11.5.7 or 11.6.4 for the sample, blank, and OPR aliquots.

11.7.5 Extract the aliquots using the SDS procedure in Section 12.3.

11.8 Fish and Other Tissues—Prior to processing tissue samples, the laboratory must determine the exact tissue to be analyzed. Common requests for analysis of fish tissue include whole fish—skin on, whole fish—skin removed, edible fish fillets (filleted in the field or by the laboratory), specific organs, and other portions. Once the appropriate tissue has been determined, the sample must be homogenized.

11.8.1 Homogenization.

11.8.1.1 Samples are homogenized while still frozen, where practical. If the laboratory must dissect the whole fish to obtain the appropriate tissue for analysis, the unused tissues may be rapidly refrozen and stored in a clean glass jar for subsequent use.

11.8.1.2 Each analysis requires 10 g of tissue (wet weight). Therefore, the laboratory should homogenize at least 20 g of tissue to allow for re-extraction of a second aliquot of the same homogenized sample, if re-analysis is required. When whole fish analysis is necessary, the entire fish is homogenized.

11.8.1.3 Homogenize the sample in a tissue homogenizer (Section 6.3.3) or grind in a meat grinder (Section 6.3.4). Cut tissue too large to feed into the grinder into smaller pieces. To assure homogeneity, grind three times.

11.8.1.4 Transfer approximately 10 g (wet weight) of homogenized tissue to a clean, tared, 400–500 mL beaker. For the alternate HCl digestion/extraction, transfer the tissue to a clean, tared 500–600 mL wide-mouth bottle. Record the weight to the nearest 10 mg.

11.8.1.5 Transfer the remaining homogenized tissue to a clean jar with a fluoropolymer-lined lid. Seal the jar and store the tissue at < − 10 °C. Return any tissue that was not homogenized to its original container and store at < − 10 °C.

11.8.2 QC aliquots.

11.8.2.1 Prepare a method blank by adding approximately 10 g of the oily liquid reference matrix (Section 7.6.4) to a 400–500 mL beaker. For the alternate HCl digestion/extraction, add the

reference matrix to a 500–600 mL wide-mouth bottle. Record the weight to the nearest 10 mg.

11.8.2.2 Prepare a precision and recovery aliquot by adding approximately 10 g of the oily liquid reference matrix (Section 7.6.4) to a separate 400–500 mL beaker or wide-mouth bottle, depending on the extraction procedure to be used. Record the weight to the nearest 10 mg. If the initial precision and recovery test is to be performed, use four aliquots; if the ongoing precision and recovery test is to be performed, use a single aliquot.

11.8.3 Spiking

11.8.3.1 Spike 1.0 mL of the labeled compound spiking solution (Section 7.10.3) into the sample, blank, and OPR aliquot.

11.8.3.2 Spike 1.0 mL of the PAR standard (Section 7.14) into the OPR aliquot.

11.8.4 Extract the aliquots using the procedures in Section 12.4.

12.0 Extraction and Concentration

Extraction procedures include separatory funnel (Section 12.1) and solid phase (Section 12.2) for aqueous liquids; Soxhlet/Dean-Stark (Section 12.3) for solids, filters, and SPE disks; and Soxhlet extraction (Section 12.4.1) and HCl digestion (Section 12.4.2) for tissues. Acid/base back-extraction (Section 12.5) is used for initial cleanup of extracts.

Macro-concentration procedures include rotary evaporation (Section 12.6.1), heating mantle (Section 12.6.2), and Kuderna-Danish (K–D) evaporation (Section 12.6.3). Micro-concentration uses nitrogen blowdown (Section 12.7).

12.1 Separatory funnel extraction of filtrates and of aqueous samples visibly absent particles.

12.1.1 Pour the spiked sample (Section 11.4.2.2) or filtrate (Section 11.4.3.5) into a 2 L separatory funnel. Rinse the bottle or flask twice with 5 mL of reagent water and add these rinses to the separatory funnel.

12.1.2 Add 60 mL methylene chloride to the empty sample bottle (Section 12.1.1), seal, and shake 60 seconds to rinse the inner surface. Transfer the solvent to the separatory funnel, and extract the sample by shaking the funnel for two minutes with periodic venting. Allow the organic layer to separate from the aqueous phase for a minimum of 10 minutes. If an emulsion forms and is more than one-third the volume of the solvent layer, employ mechanical techniques to complete the phase separation (see note below). Drain the methylene chloride extract through a solvent-rinsed glass funnel approximately one-half full of granular anhydrous sodium sulfate (Section 7.2.1) supported on clean glass-fiber paper into a solvent-rinsed concentration device (Section 12.6).

Note: If an emulsion forms, the analyst must employ mechanical techniques to complete the phase separation. The optimum technique depends upon the sample, but may include stirring, filtration through glass wool, use of phase separation paper, centrifugation, use of an ultrasonic bath with ice, addition of NaCl, or other physical methods. Alternatively, solid-phase or other extraction techniques may be used to prevent emulsion formation. Any alternative technique is acceptable so long as the requirements in Section 9 are met.

Experience with aqueous samples high in dissolved organic materials (e.g., paper mill effluents) has shown that acidification of the sample prior to extraction may reduce the formation of emulsions. Paper industry methods suggest that the addition of up to 400 mL of ethanol to a 1 L effluent sample may also reduce emulsion formation. However, studies by EPA suggest that the effect may be a result of sample dilution, and that the addition of reagent water may serve the same function. Mechanical techniques may still be necessary to complete the phase separation. If either acidification or addition of ethanol is utilized, the laboratory must perform the startup tests described in Section 9.2 using the same techniques.

12.1.3 Extract the water sample two more times with 60 mL portions of methylene chloride. Drain each portion through the sodium sulfate into the concentrator. After the third extraction, rinse the separatory funnel with at least 20 mL of methylene chloride, and drain this rinse through the sodium sulfate into the concentrator. Repeat this rinse at least twice. Set aside the funnel with sodium sulfate if the extract is to be combined with the extract from the particles.

12.1.4 Concentrate the extract using one of the macro-concentration procedures in Section 12.6.

12.1.4.1 If the extract is from a sample visibly absent particles (Section 11.1.2.1), adjust the final volume of the concentrated extract to approximately 10 mL with hexane, transfer to a 250 mL separatory funnel, and back-extract using the procedure in Section 12.5.

12.1.4.2 If the extract is from the aqueous filtrate (Section 11.4.3.5), set aside the concentration apparatus for addition of the SDS extract from the particles (Section 12.3.9.1.2).

12.2 SPE of Samples Containing Less Than 1% Solids (References 19–20).

12.2.1 Disk preparation.

12.2.1.1 Place an SPE disk on the base of the filter holder (Figure 4) and wet with toluene. While holding a GMF 150 filter above the SPE disk with tweezers, wet the filter with toluene and lay the filter on the SPE disk, making sure that air is not trapped between the filter and disk. Clamp the filter and SPE disk between the 1 L glass reservoir and the vacuum filtration flask.

12.2.1.2 Rinse the sides of the filtration flask with approx 15 mL of toluene using a squeeze bottle or syringe. Apply vacuum momentarily until a few drops appear at the drip tip. Release the vacuum and allow the filter/disk to soak for approx one minute. Apply vacuum and draw all of the toluene through the filter/disk. Repeat the wash step with approx 15 mL of acetone and allow the filter/disk to air dry.

12.2.1.3 Re-wet the filter/disk with approximately 15 mL of methanol, allowing the filter/disk to soak for approximately one minute. Pull the methanol through the filter/disk using the vacuum, but retain a layer of methanol approximately 1 mm thick on the filter. Do not allow the disk to go dry from this point until the end of the extraction.

12.2.1.4 Rinse the filter/disk with two 50-mL portions of reagent water by adding the water to the reservoir and pulling most through, leaving a layer of water on the surface of the filter.

12.2.2 Extraction.

12.2.2.1 Pour the spiked sample (Section 11.4.2.2), blank (Section 11.4.2.4), or IPR/OPR aliquot (Section 11.4.2.5) into the reservoir and turn on the vacuum to begin the extraction. Adjust the vacuum to complete the extraction in no less than 10 minutes. For samples containing a high concentration of particles (suspended solids), filtration times may be eight hours or longer.

12.2.2.2 Before all of the sample has been pulled through the filter/disk, rinse the sample bottle with approximately 50 mL of reagent water to remove any solids, and pour into the reservoir. Pull through the filter/disk. Use additional reagent water rinses until all visible solids are removed.

12.2.2.3 Before all of the sample and rinses have been pulled through the filter/disk, rinse the sides of the reservoir with small portions of reagent water.

12.2.2.4 Allow the filter/disk to dry, then remove the filter and disk and place in a glass Petri dish. Extract the filter and disk per Section 12.3.

12.3 SDS Extraction of Samples Containing Particles, and of Filters and/or Disks.

12.3.1 Charge a clean extraction thimble (Section 6.4.2.2) with 5.0 g of 100/200 mesh silica (Section 7.5.1.1) topped with 100 g of quartz sand (Section 7.3.2).

Note: Do not disturb the silica layer throughout the extraction process.

12.3.2 Place the thimble in a clean extractor. Place 30–40 mL of toluene in the receiver and 200–250 mL of toluene in the flask.

12.3.3 Pre-extract the glassware by heating the flask until the toluene is boiling. When properly adjusted, one to two drops of toluene will fall per second from the condenser tip into the receiver. Extract the apparatus for a minimum of three hours.

12.3.4 After pre-extraction, cool and disassemble the apparatus. Rinse the thimble with toluene and allow to air dry.

12.3.5 Load the wet sample, filter, and/or disk from Section 11.4.3.6, 11.5.8, 11.6.4, 11.7.3, 11.7.4, or 12.2.2.4 and any nonaqueous liquid from Section 11.6.3 into the thimble and manually mix into the sand layer with a clean metal spatula, carefully breaking up any large lumps of sample.

12.3.6 Reassemble the pre-extracted SDS apparatus, and add a fresh charge of toluene to the receiver and reflux flask. Apply power to the heating mantle to begin refluxing. Adjust the reflux rate to match the rate of percolation through the sand and silica beds until water removal lessens the restriction to toluene flow. Frequently check the apparatus for foaming during the first two hours of extraction. If foaming occurs, reduce the reflux rate until foaming subsides.

12.3.7 Drain the water from the receiver at one to two hours and eight to nine hours, or sooner if the receiver fills with water. Reflux the sample for a total of 16–24 hours. Cool and disassemble the apparatus. Record the total volume of water collected.

12.3.8 Remove the distilling flask. Drain the water from the Dean-Stark receiver and add any toluene in the receiver to the extract in the flask.

12.3.9 Concentrate the extract using one of the macro-concentration procedures in Section 12.6 per the following:

12.3.9.1 Extracts from the particles in an aqueous sample containing less than 1% solids (Section 11.4.3.6).

12.3.9.1.1 Concentrate the extract to approximately 5 mL using the rotary evaporator or heating mantle procedures in Section 12.6.1 or 12.6.2.

12.3.9.1.2 Quantitatively transfer the extract through the sodium sulfate (Section 12.1.3) into the apparatus that was set aside (Section 12.1.4.2) and reconcentrate to the level of the toluene.

12.3.9.1.3 Adjust to approximately 10 mL with hexane, transfer to a 250 mL separatory funnel, and proceed with back-extraction (Section 12.5).

12.3.9.2 Extracts from particles (Sections 11.5 through 11.6) or from the SPE filter and disk (Section 12.2.2.4)—Concentrate to approximately 10 mL using the rotary evaporator or heating mantle (Section 12.6.1 or 12.6.2), transfer to a 250 mL separatory funnel, and proceed with back-extraction (Section 12.5).

12.4 Extraction of Tissue—Two procedures are provided for tissue extraction.

12.4.1 Soxhlet extraction (Reference 21).

12.4.1.1 Add 30–40 g of powdered anhydrous sodium sulfate to each of the beakers (Section 11.8.4) and mix thoroughly. Cover the beakers with aluminum foil and allow to equilibrate for 12–24 hours. Remix prior to extraction to prevent clumping.

12.4.1.2 Assemble and pre-extract the Soxhlet apparatus per Sections 12.3.1 through 12.3.4, except use the methylene chloride:hexane (1:1) mixture for the pre-extraction and rinsing and omit the quartz sand. The Dean-Stark moisture trap may also be omitted, if desired.

12.4.1.3 Reassemble the pre-extracted Soxhlet apparatus and add a fresh charge of methylene chloride:hexane to the reflux flask.

12.4.1.4 Transfer the sample/sodium sulfate mixture (Section 12.4.1.1) to the Soxhlet thimble, and install the thimble in the Soxhlet apparatus.

12.4.1.5 Rinse the beaker with several portions of solvent mixture and add to the thimble. Fill the thimble/receiver with solvent. Extract for 18–24 hours.

12.4.1.6 After extraction, cool and disassemble the apparatus.

12.4.1.7 Quantitatively transfer the extract to a macro-concentration device (Section 12.6), and concentrate to near dryness. Set aside the concentration apparatus for re-use.

12.4.1.8 Complete the removal of the solvent using the nitrogen blowdown procedure (Section 12.7) and a water bath temperature of 60°C. Weigh the receiver, record the weight, and return the receiver to the blowdown apparatus, concentrating the residue until a constant weight is obtained.

12.4.1.9 Percent lipid determination—The lipid content is determined by extraction of tissue with the same solvent system (methylene chloride:hexane) that was used in EPA's National Dioxin Study (Reference 22) so that lipid contents are consistent with that study.

12.4.1.9.1 Redissolve the residue in the receiver in hexane and spike 1.0 mL of the cleanup standard (Section 7.11) into the solution.

12.4.1.9.2 Transfer the residue/hexane to the anthropogenic isolation column (Section 13.7.1) or bottle for the acidified silica gel batch cleanup (Section 13.7.2), retaining the boiling chips in the concentration apparatus. Use several rinses to assure that all material is transferred. If necessary, sonicate or heat the receiver slightly to assure that all material is re-dissolved. Allow the receiver to dry. Weigh the receiver and boiling chips.

12.4.1.9.3 Calculate the lipid content to the nearest three significant figures as follows:

$$\text{Percent lipid} = \frac{\text{Weight of residue (g)}}{\text{Weight of tissue (g)}} \times 100$$

12.4.1.9.4 It is not necessary to determine the lipid content of the blank, IPR, or OPR aliquots.

12.4.2 HCl digestion/extraction and concentration (References 23–26).

12.4.2.1 Add 200 mL of 6 N HCl and 200 mL of methylene chloride:hexane (1:1) to the sample and QC aliquots (Section 11.8.4).

12.4.2.2 Cap and shake each bottle one to three times. Loosen the cap in a hood to vent excess pressure. Shake each bottle for 10–30 seconds and vent.

12.4.2.3 Tightly cap and place on shaker. Adjust the shaker action and speed so that the acid, solvent, and tissue are in constant motion. However, take care to avoid such violent action that the bottle may be dislodged from the shaker. Shake for 12–24 hours.

12.4.2.4 After digestion, remove the bottles from the shaker. Allow the bottles to stand so that the solvent and acid layers separate.

12.4.2.5 Decant the solvent through a glass funnel with glass-fiber filter (Sections 6.5.2 through 6.5.3) containing approximately 10 g of granular anhydrous sodium sulfate (Section 7.2.1) into a macro-concentration apparatus (Section 12.6). Rinse the contents of the bottle with two 25 mL portions of hexane and pour through the sodium sulfate into the apparatus.

12.4.2.6 Concentrate the solvent to near dryness using a macro-concentration procedure (Section 12.6).

12.4.2.7 Complete the removal of the solvent using the nitrogen blowdown apparatus (Section 12.7) and a water bath temperature of 60°C. Weigh the receiver, record the weight, and return the receiver to the blowdown apparatus, concentrating the residue until a constant weight is obtained.

12.4.2.8 Percent lipid determination—The lipid content is determined in the same solvent system [methylene chloride:hexane (1:1)] that was used in EPA's National Dioxin Study (Reference 22) so that lipid contents are consistent with that study.

12.4.2.8.1 Redissolve the residue in the receiver in hexane and spike 1.0 mL of the cleanup standard (Section 7.11) into the solution.

12.4.2.8.2 Transfer the residue/hexane to the narrow-mouth 100–200 mL bottle retaining the boiling chips in the receiver. Use several rinses to assure that all material is transferred, to a maximum hexane volume of approximately 70 mL. Allow the receiver to dry. Weigh the receiver and boiling chips.

12.4.2.8.3 Calculate the percent lipid per Section 12.4.1.9.3. It is not necessary to determine the lipid content of the blank, IPR, or OPR aliquots.

12.4.2.9 Clean up the extract per Section 13.7.3.

12.5 Back-Extraction with Base and Acid.

12.5.1 Spike 1.0 mL of the cleanup standard (Section 7.11) into the separatory funnels containing the sample and QC extracts from Section 12.1.4.1, 12.3.9.1.3, or 12.3.9.2.

12.5.2 Partition the extract against 50 mL of potassium hydroxide solution (Section 7.1.1). Shake for two minutes with periodic venting into a hood. Remove and discard the aqueous layer. Repeat the base washing until no color is visible in the aqueous layer, to a maximum of four washings. Minimize contact time between the extract and the base to prevent degradation of the CDDs/CDFs. Stronger potassium hydroxide solutions may be employed for back-extraction, provided that the laboratory meets the specifications for labeled compound recovery and demonstrates acceptable performance using the procedure in Section 9.2.

12.5.3 Partition the extract against 50 mL of sodium chloride solution (Section 7.1.4) in the same way as with base. Discard the aqueous layer.

12.5.4 Partition the extract against 50 mL of sulfuric acid (Section 7.1.2) in the same way as with base. Repeat the acid washing until no color is visible in the aqueous layer, to a maximum of four washings.

12.5.5 Repeat the partitioning against sodium chloride solution and discard the aqueous layer.

12.5.6 Pour each extract through a drying column containing 7–10 cm of granular anhydrous sodium sulfate (Section 7.2.1). Rinse the separatory funnel with 30–50 mL of solvent, and pour through the drying column. Collect each extract in a round-bottom flask. Re-concentrate the sample and QC aliquots per Sections 12.6 through 12.7, and clean up the samples and QC aliquots per Section 13.

12.6 Macro-Concentration—Extracts in toluene are concentrated using a rotary evaporator or a heating mantle; extracts in methylene chloride or hexane are concentrated using a rotary evaporator, heating mantle, or Kuderna-Danish apparatus.

12.6.1 Rotary evaporation—Concentrate the extracts in separate round-bottom flasks.

12.6.1.1 Assemble the rotary evaporator according to manufacturer's instructions, and warm the water bath to 45°C. On a daily basis, preclean the rotary evaporator by concentrating 100 mL of clean extraction solvent through the system. Archive both the concentrated solvent and the solvent in the catch flask for a contamination check if necessary. Between samples, three 2–3 mL aliquots of solvent should be rinsed down the feed tube into a waste beaker.

12.6.1.2 Attach the round-bottom flask containing the sample extract to the rotary evaporator. Slowly apply vacuum to the system, and begin rotating the sample flask.

12.6.1.3 Lower the flask into the water bath, and adjust the speed of rotation and the temperature as required to complete concentration in 15–20 minutes. At the proper rate of concentration, the flow of solvent into the receiving flask will be steady, but no bumping or visible boiling of the extract will occur.

Note: If the rate of concentration is too fast, analyte loss may occur.

12.6.1.4 When the liquid in the concentration flask has reached an apparent volume of approximately 2 mL, remove the flask from the water bath and stop the rotation. Slowly and carefully admit air into the system. Be sure not to open the valve so quickly that the sample is blown out of the flask. Rinse the feed tube with approximately 2 mL of solvent.

12.6.1.5 Proceed to Section 12.6.4 for preparation for back-extraction or micro-concentration and solvent exchange.

12.6.2 Heating mantle—Concentrate the extracts in separate round-bottom flasks.

12.6.2.1 Add one or two clean boiling chips to the round-bottom flask, and attach a three-ball macro Snyder column. Prewet the column by adding approximately 1 mL of solvent through the top. Place the round-bottom flask in a heating mantle, and apply heat as required to complete the concentration in 15–20 minutes. At the proper rate of distillation, the balls of the column will actively chatter, but the chambers will not flood.

12.6.2.2 When the liquid has reached an apparent volume of approximately 10 mL, remove the round-bottom flask from the heating mantle and allow the solvent to drain and cool for at least 10 minutes. Remove the Snyder column and rinse the glass joint into the receiver with small portions of solvent.

12.6.2.3 Proceed to Section 12.6.4 for preparation for back-extraction or micro-concentration and solvent exchange.

12.6.3 Kuderna-Danish (K–D)—Concentrate the extracts in separate 500 mL K–D flasks equipped with 10 mL concentrator tubes. The K–D technique is used for solvents such as methylene chloride and hexane. Toluene is difficult to concentrate using the K–D technique unless a water bath fed by a steam generator is used.

12.6.3.1 Add one to two clean boiling chips to the receiver. Attach a three-ball macro Snyder column. Prewet the column by adding approximately 1 mL of solvent through the top. Place the K–D apparatus in a hot water bath so that the entire lower rounded surface of the flask is bathed with steam.

12.6.3.2 Adjust the vertical position of the apparatus and the water temperature as required to complete the concentration in 15–20 minutes. At the proper rate of distillation, the balls of the column will actively chatter but the chambers will not flood.

12.6.3.3 When the liquid has reached an apparent volume of 1 mL, remove the K–D apparatus from the bath and allow the solvent to drain and cool for at least 10 minutes. Remove the Snyder column and rinse the flask and its lower joint into the concentrator tube with 1–2 mL of solvent. A 5 mL syringe is recommended for this operation.

12.6.3.4 Remove the three-ball Snyder column, add a fresh boiling chip, and attach a two-ball micro Snyder column to the concentrator tube. Prewet the column by adding approximately 0.5 mL of solvent through the top. Place the apparatus in the hot water bath.

12.6.3.5 Adjust the vertical position and the water temperature as required to complete the concentration in 5–10 minutes. At the proper rate of distillation, the balls of the column will actively chatter but the chambers will not flood.

12.6.3.6 When the liquid reaches an apparent volume of 0.5 mL, remove the

apparatus from the water bath and allow to drain and cool for at least 10 minutes.

12.6.3.7 Proceed to 12.6.4 for preparation for back-extraction or micro-concentration and solvent exchange.

12.6.4 Preparation for back-extraction or micro-concentration and solvent exchange.

12.6.4.1 For back-extraction (Section 12.5), transfer the extract to a 250 mL separatory funnel. Rinse the concentration vessel with small portions of hexane, adjust the hexane volume in the separatory funnel to 10–20 mL, and proceed to back-extraction (Section 12.5).

12.6.4.2 For determination of the weight of residue in the extract, or for clean-up procedures other than back-extraction, transfer the extract to a blowdown vial using two to three rinses of solvent. Proceed with micro-concentration and solvent exchange (Section 12.7).

12.7 Micro-Concentration and Solvent Exchange.

12.7.1 Extracts to be subjected to GPC or HPLC cleanup are exchanged into methylene chloride. Extracts to be cleaned up using silica gel, alumina, carbon, and/or Florisil are exchanged into hexane.

12.7.2 Transfer the vial containing the sample extract to a nitrogen blowdown device. Adjust the flow of nitrogen so that the surface of the solvent is just visibly disturbed.

Note: A large vortex in the solvent may cause analyte loss.

12.7.3 Lower the vial into a 45°C water bath and continue concentrating.

12.7.3.1 If the extract is to be concentrated to dryness for weight determination (Sections 12.4.1.8, 12.4.2.7, and 13.7.1.4), blow dry until a constant weight is obtained.

12.7.3.2 If the extract is to be concentrated for injection into the GC/MS or the solvent is to be exchanged for extract cleanup, proceed as follows:

12.7.4 When the volume of the liquid is approximately 100 L, add 2–3 mL of the desired solvent (methylene chloride for GPC and HPLC, or hexane for the other cleanups) and continue concentration to approximately 100 µL. Repeat the addition of solvent and concentrate once more.

12.7.5 If the extract is to be cleaned up by GPC, adjust the volume of the extract to 5.0 mL with methylene chloride. If the extract is to be cleaned up by HPLC, further concentrate the extract to 30 µL. Proceed with GPC or HPLC cleanup (Section 13.2 or 13.6, respectively).

12.7.6 If the extract is to be cleaned up by column chromatography (alumina, silica gel, Carbopak/Celite, or Florisil), bring the final volume to 1.0 mL with hexane. Proceed with column cleanups (Sections 13.3 through 13.5 and 13.8).

12.7.7 If the extract is to be concentrated for injection into the GC/MS (Section 14), quantitatively transfer the extract to a 0.3 mL conical vial for final concentration, rinsing the larger vial with hexane and adding the rinse to the conical vial. Reduce the volume to approximately 100 µL. Add 10 µL of nonane to the vial, and evaporate the solvent to the level of the nonane. Seal the vial and label with the sample number. Store in the dark at room temperature until ready for GC/MS analysis. If GC/MS analysis will not be performed on the same day, store the vial at < -10°C.

13.0 Extract Cleanup

13.1 Cleanup may not be necessary for relatively clean samples (e.g., treated effluents, groundwater, drinking water). If particular circumstances require the use of a cleanup procedure, the analyst may use any or all of the procedures below or any other appropriate procedure. Before using a cleanup procedure, the analyst must demonstrate that the requirements of Section 9.2 can be met using the cleanup procedure. If only 2,3,7,8-TCDD and 2,3,7,8-TCDF are to be determined, the cleanup procedures may be optimized for isolation of these two compounds.

13.1.1 Gel permeation chromatography (Section 13.2) removes high molecular weight interferences that cause GC column performance to degrade. It should be used for all soil and sediment extracts and may be used for water extracts that are expected to contain high molecular weight organic compounds (e.g., polymeric materials, humic acids).

13.1.2 Acid, neutral, and basic silica gel (Section 13.3), alumina (Section 13.4), and Florisil (Section 13.8) are used to remove nonpolar and polar interferences. Alumina and Florisil are used to remove chlorodiphenyl ethers.

13.1.3 Carbopak/Celite (Section 13.5) is used to remove nonpolar interferences.

13.1.4 HPLC (Section 13.6) is used to provide specificity for the 2,3,7,8-substituted and other CDD and CDF isomers.

13.1.5 The anthropogenic isolation column (Section 13.7.1), acidified silica gel batch adsorption procedure (Section 13.7.2), and sulfuric acid and base back-extraction (Section 13.7.3) are used for removal of lipids from tissue samples.

13.2 Gel Permeation Chromatography (GPC).

13.2.1 Column packing.

13.2.1.1 Place 70–75 g of SX–3 Bio-beads (Section 6.7.1.1) in a 400–500 mL beaker.

13.2.1.2 Cover the beads with methylene chloride and allow to swell overnight (a minimum of 12 hours).

13.2.1.3 Transfer the swelled beads to the column (Section 6.7.1.1) and pump solvent through the column, from bottom to top, at 4.5–5.5 mL/minute prior to connecting the column to the detector.

13.2.1.4 After purging the column with solvent for one to two hours, adjust the column head pressure to 7–10 psig and purge for four to five hours to remove air. Maintain a head pressure of 7–10 psig. Connect the column to the detector (Section 6.7.1.4).

13.2.2 Column calibration.

13.2.2.1 Load 5 mL of the calibration solution (Section 7.4) into the sample loop.

13.2.2.2 Inject the calibration solution and record the signal from the detector. The elution pattern will be corn oil, bis(2-ethyl hexyl)phthalate, pentachlorophenol, perylene, and sulfur.

13.2.2.3 Set the ''dump time'' to allow >85% removal of the corn oil and >85% collection of the phthalate.

13.2.2.4 Set the ''collect time'' to the peak minimum between perylene and sulfur.

13.2.2.5 Verify the calibration with the calibration solution after every 20 extracts. Calibration is verified if the recovery of the pentachlorophenol is greater than 85%. If calibration is not verified, the system shall be recalibrated using the calibration solution, and the previous 20 samples shall be re-extracted and cleaned up using the calibrated GPC system.

13.2.3 Extract cleanup—GPC requires that the column not be overloaded. The column specified in this method is designed to handle a maximum of 0.5 g of high molecular weight material in a 5 mL extract. If the extract is known or expected to contain more than 0.5 g, the extract is split into aliquots for GPC, and the aliquots are combined after elution from the column. The residue content of the extract may be obtained gravimetrically by evaporating the solvent from a 50 µL aliquot.

13.2.3.1 Filter the extract or load through the filter holder (Section 6.7.1.3) to remove the particles. Load the 5.0 mL extract onto the column.

13.2.3.2 Elute the extract using the calibration data determined in Section

13.2.2. Collect the eluate in a clean 400–500 mL beaker.

13.2.3.3 Rinse the sample loading tube thoroughly with methylene chloride between extracts to prepare for the next sample.

13.2.3.4 If a particularly dirty extract is encountered, a 5.0 mL methylene chloride blank shall be run through the system to check for carry-over.

13.2.3.5 Concentrate the eluate per Sections 12.6 and 12.7 for further cleanup or injection into the GC/MS.

13.3 Silica Gel Cleanup.

13.3.1 Place a glass-wool plug in a 15 mm ID chromatography column (Section 6.7.4.2). Pack the column bottom to top with: 1 g silica gel (Section 7.5.1.1), 4 g basic silica gel (Section 7.5.1.3), 1 g silica gel, 8 g acid silica gel (Section 7.5.1.2), 2 g silica gel, and 4 g granular anhydrous sodium sulfate (Section 7.2.1). Tap the column to settle the adsorbents.

13.3.2 Pre-elute the column with 50–100 mL of hexane. Close the stopcock when the hexane is within 1 mm of the sodium sulfate. Discard the eluate. Check the column for channeling. If channeling is present, discard the column and prepare another.

13.3.3 Apply the concentrated extract to the column. Open the stopcock until the extract is within 1 mm of the sodium sulfate.

13.3.4 Rinse the receiver twice with 1 mL portions of hexane, and apply separately to the column. Elute the CDDs/CDFs with 100 mL hexane, and collect the eluate.

13.3.5 Concentrate the eluate per Sections 12.6 and 12.7 for further cleanup or injection into the HPLC or GC/MS.

13.3.6 For extracts of samples known to contain large quantities of other organic compounds (such as paper mill effluents), it may be advisable to increase the capacity of the silica gel column. This may be accomplished by increasing the strengths of the acid and basic silica gels. The acid silica gel (Section 7.5.1.2) may be increased in strength to as much as 44% w/w (7.9 g sulfuric acid added to 10 g silica gel). The basic silica gel (Section 7.5.1.3) may be increased in strength to as much as 33% w/w (50 mL 1N NaOH added to 100 g silica gel), or the potassium silicate (Section 7.5.1.4) may be used.

Note: The use of stronger acid silica gel (44% w/w) may lead to charring of organic compounds in some extracts. The charred material may retain some of the analytes and lead to lower recoveries of CDDs/CDFs. Increasing the strengths of the acid and basic silica gel may also require different volumes of hexane than those specified above to elute the analytes off the column. Therefore, the performance of the method after such modifications must be verified by the procedure in Section 9.2.

13.4 Alumina Cleanup.

13.4.1 Place a glass-wool plug in a 15 mm ID chromatography column (Section 6.7.4.2).

13.4.2 If using acid alumina, pack the column by adding 6 g acid alumina (Section 7.5.2.1). If using basic alumina, substitute 6 g basic alumina (Section 7.5.2.2). Tap the column to settle the adsorbents.

13.4.3 Pre-elute the column with 50–100 mL of hexane. Close the stopcock when the hexane is within 1 mm of the alumina.

13.4.4 Discard the eluate. Check the column for channeling. If channeling is present, discard the column and prepare another.

13.4.5 Apply the concentrated extract to the column. Open the stopcock until the extract is within 1 mm of the alumina.

13.4.6 Rinse the receiver twice with 1 mL portions of hexane and apply separately to the column. Elute the interfering compounds with 100 mL hexane and discard the eluate.

13.4.7 The choice of eluting solvents will depend on the choice of alumina (acid or basic) made in Section 13.4.2.

13.4.7.1 If using acid alumina, elute the CDDs/CDFs from the column with 20 mL methylene chloride:hexane (20:80 v/v). Collect the eluate.

13.4.7.2 If using basic alumina, elute the CDDs/CDFs from the column with 20 mL methylene chloride:hexane (50:50 v/v). Collect the eluate.

13.4.8 Concentrate the eluate per Sections 12.6 and 12.7 for further cleanup or injection into the HPLC or GC/MS.

13.5 Carbon Column.

13.5.1 Cut both ends from a 10 mL disposable serological pipet (Section 6.7.3.2) to produce a 10 cm column. Fire-polish both ends and flare both ends if desired. Insert a glass-wool plug at one end, and pack the column with 0.55 g of Carbopak/Celite (Section 7.5.3.3) to form an adsorbent bed approximately 2 cm long. Insert a glass-wool plug on top of the bed to hold the adsorbent in place.

13.5.2 Pre-elute the column with 5 mL of toluene followed by 2 mL of methylene chloride: methanol:toluene (15:4:1 v/v), 1 mL of methylene chloride:cyclohexane (1:1 v/v), and 5 mL of hexane. If the flow rate of eluate exceeds 0.5 mL/minute, discard the column.

13.5.3 When the solvent is within 1 mm of the column packing, apply the sample extract to the column. Rinse the sample container twice with 1 mL portions of hexane and apply separately to the column. Apply 2 mL of hexane to complete the transfer.

13.5.4 Elute the interfering compounds with two 3 mL portions of hexane, 2 mL of methylene chloride:cyclohexane (1:1 v/v), and 2 mL of methylene chloride:methanol:toluene (15:4:1 v/v). Discard the eluate.

13.5.5 Invert the column, and elute the CDDs/CDFs with 20 mL of toluene. If carbon particles are present in the eluate, filter through glass-fiber filter paper.

13.5.6 Concentrate the eluate per Sections 12.6 and 12.7 for further cleanup or injection into the HPLC or GC/MS.

13.6 HPLC (Reference 6).

13.6.1 Column calibration.

13.6.1.1 Prepare a calibration standard containing the 2,3,7,8-substituted isomers and/or other isomers of interest at a concentration of approximately 500 pg/µL in methylene chloride.

13.6.1.2 Inject 30 µL of the calibration solution into the HPLC and record the signal from the detector. Collect the eluant for reuse. The elution order will be the tetra- through octa-isomers.

13.6.1.3 Establish the collection time for the tetra-isomers and for the other isomers of interest. Following calibration, flush the injection system with copious quantities of methylene chloride, including a minimum of five 50 µL injections while the detector is monitored, to ensure that residual CDDs/CDFs are removed from the system.

13.6.1.4 Verify the calibration with the calibration solution after every 20 extracts. Calibration is verified if the recovery of the CDDs/CDFs from the calibration standard (Section 13.6.1.1) is 75–125% compared to the calibration (Section 13.6.1.2). If calibration is not verified, the system shall be recalibrated using the calibration solution, and the previous 20 samples shall be re-extracted and cleaned up using the calibrated system.

13.6.2 Extract cleanup—HPLC requires that the column not be overloaded. The column specified in this method is designed to handle a maximum of 30 µL of extract. If the extract cannot be concentrated to less than 30 µL, it is split into fractions and the fractions are combined after elution from the column.

13.6.2.1 Rinse the sides of the vial twice with 30 µL of methylene chloride and reduce to 30 µL with the evaporation apparatus (Section 12.7).

13.6.2.2 Inject the 30 µL extract into the HPLC.

13.6.2.3 Elute the extract using the calibration data determined in Section 13.6.1. Collect the fraction(s) in a clean 20 mL concentrator tube containing 5 mL of hexane:acetone (1:1 v/v).

13.6.2.4 If an extract containing greater than 100 ng/mL of total CDD or CDF is encountered, a 30 µL methylene chloride blank shall be run through the system to check for carry-over.

13.6.2.5 Concentrate the eluate per Section 12.7 for injection into the GC/MS.

13.7 Cleanup of Tissue Lipids—Lipids are removed from the Soxhlet extract using either the anthropogenic isolation column (Section 13.7.1) or acidified silica gel (Section 13.7.2), or are removed from the HCl digested extract using sulfuric acid and base back-extraction (Section 13.7.3).

13.7.1 Anthropogenic isolation column (References 22 and 27)—Used for removal of lipids from the Soxhlet/SDS extraction (Section 12.4.1).

13.7.1.1 Prepare the column as given in Section 7.5.4.

13.7.1.2 Pre-elute the column with 100 mL of hexane. Drain the hexane layer to the top of the column, but do not expose the sodium sulfate.

13.7.1.3 Load the sample and rinses (Section 12.4.1.9.2) onto the column by draining each portion to the top of the bed. Elute the CDDs/CDFs from the column into the apparatus used for concentration (Section 12.4.1.7) using 200 mL of hexane.

13.7.1.4 Concentrate the cleaned up extract (Sections 12.6 through 12.7) to constant weight per Section 12.7.3.1. If more than 500 mg of material remains, repeat the cleanup using a fresh anthropogenic isolation column.

13.7.1.5 Redissolve the extract in a solvent suitable for the additional cleanups to be used (Sections 13.2 through 13.6 and 13.8).

13.7.1.6 Spike 1.0 mL of the cleanup standard (Section 7.11) into the residue/solvent.

13.7.1.7 Clean up the extract using the procedures in Sections 13.2 through 13.6 and 13.8. Alumina (Section 13.4) or Florisil (Section 13.8) and carbon (Section 13.5) are recommended as minimum additional cleanup steps.

13.7.1.8 Following cleanup, concentrate the extract to 10 µL as described in Section 12.7 and proceed with the analysis in Section 14.

13.7.2 Acidified silica gel (Reference 28)—Procedure alternate to the anthropogenic isolation column (Section 13.7.1) that is used for removal of lipids from the Soxhlet/SDS extraction (Section 12.4.1).

13.7.2.1 Adjust the volume of hexane in the bottle (Section 12.4.1.9.2) to approximately 200 mL.

13.7.2.2 Spike 1.0 mL of the cleanup standard (Section 7.11) into the residue/solvent.

13.7.2.3 Drop the stirring bar into the bottle, place the bottle on the stirring plate, and begin stirring.

13.7.2.4 Add 30–100 g of acid silica gel (Section 7.5.1.2) to the bottle while stirring, keeping the silica gel in motion. Stir for two to three hours.

Note: 30 grams of silica gel should be adequate for most samples and will minimize contamination from this source.

13.7.2.5 After stirring, pour the extract through approximately 10 g of granular anhydrous sodium sulfate (Section 7.2.1) contained in a funnel with glass-fiber filter into a macro contration device (Section 12.6). Rinse the bottle and sodium sulfate with hexane to complete the transfer.

13.7.2.6 Concentrate the extract per Sections 12.6 through 12.7 and clean up the extract using the procedures in Sections 13.2 through 13.6 and 13.8. Alumina (Section 13.4) or Florisil (Section 13.8) and carbon (Section 13.5) are recommended as minimum additional cleanup steps.

13.7.3 Sulfuric acid and base back-extraction'Used with HCl digested extracts (Section 12.4.2).

13.7.3.1 Spike 1.0 mL of the cleanup standard (Section 7.11) into the residue/solvent (Section 12.4.2.8.2).

13.7.3.2 Add 10 mL of concentrated sulfuric acid to the bottle. Immediately cap and shake one to three times. Loosen cap in a hood to vent excess pressure. Cap and shake the bottle so that the residue/solvent is exposed to the acid for a total time of approximately 45 seconds.

13.7.3.3 Decant the hexane into a 250 mL separatory funnel making sure that no acid is transferred. Complete the quantitative transfer with several hexane rinses.

13.7.3.4 Back extract the solvent/residue with 50 mL of potassium hydroxide solution per Section 12.5.2, followed by two reagent water rinses.

13.7.3.5 Drain the extract through a filter funnel containing approximately 10 g of granular anhydrous sodium sulfate in a glass-fiber filter into a macro concentration device (Section 12.6).

13.7.3.6 Concentrate the cleaned up extract to a volume suitable for the additional cleanups given in Sections 13.2 through 13.6 and 13.8. Gel permeation chromatography (Section 13.2), alumina (Section 13.4) or Florisil (Section 13.8), and Carbopak/Celite (Section 13.5) are recommended as minimum additional cleanup steps.

13.7.3.7 Following cleanup, concentrate the extract to 10 L as described in Section 12.7 and proceed with analysis per Section 14.

13.8 Florisil Cleanup (Reference 29).

13.8.1 Pre-elute the activated Florisil column (Section 7.5.3) with 10 mL of methylene chloride followed by 10 mL of hexane:methylene chloride (98:2 v/v) and discard the solvents.

13.8.2 When the solvent is within 1 mm of the packing, apply the sample extract (in hexane) to the column. Rinse the sample container twice with 1 mL portions of hexane and apply to the column.

13.8.3 Elute the interfering compounds with 20 mL of hexane:methylene chloride (98:2) and discard the eluate.

13.8.4 Elute the CDDs/CDFs with 35 mL of methylene chloride and collect the eluate. Concentrate the eluate per Sections 12.6 through 12.7 for further cleanup or for injection into the HPLC or GC/MS.

14.0 HRGC/HRMS Analysis

14.1 Establish the operating conditions given in Section 10.1.

14.2 Add 10 uL of the appropriate internal standard solution (Section 7.12) to the sample extract immediately prior to injection to minimize the possibility of loss by evaporation, adsorption, or reaction. If an extract is to be reanalyzed and evaporation has occurred, do not add more instrument internal standard solution. Rather, bring the extract back to its previous volume (e.g., 19 L) with pure nonane only (18 L if 2 L injections are used).

14.3 Inject 1.0 ≫L or 2.0 ≫L of the concentrated extract containing the internal standard solution, using on-column or splitless injection. The volume injected must be identical to the volume used for calibration (Section 10). Start the GC column initial isothermal hold upon injection. Start MS data collection after the solvent peak elutes. Stop data collection after the OCDD and OCDF have eluted. If only 2,3,7,8-TCDD and 2,3,7,8-TCDF are to be determined, stop data collection after elution of these compounds. Return the column to the initial temperature for analysis of the next extract or standard.

15.0 System and Laboratory Performance

15.1 At the beginning of each 12-hour shift during which analyses are performed, GC/MS system performance and calibration are verified for all CDDs/CDFs and labeled compounds. For these tests, analysis of the CS3 calibration verification (VER) standard (Section

7.13 and Table 4) and the isomer specificity test standards (Section 7.15 and Table 5) shall be used to verify all performance criteria. Adjustment and/or recalibration (Section 10) shall be performed until all performance criteria are met. Only after all performance criteria are met may samples, blanks, IPRs, and OPRs be analyzed.

15.2 MS Resolution—A static resolving power of at least 10,000 (10% valley definition) must be demonstrated at the appropriate m/z before any analysis is performed. Static resolving power checks must be performed at the beginning and at the end of each 12-hour shift according to procedures in Section 10.1.2. Corrective actions must be implemented whenever the resolving power does not meet the requirement.

15.3 Calibration Verification.

15.3.1 Inject the VER standard using the procedure in Section 14.

15.3.2 The m/z abundance ratios for all CDDs/CDFs shall be within the limits in Table 9; otherwise, the mass spectrometer shall be adjusted until the m/z abundance ratios fall within the limits specified, and the verification test shall be repeated. If the adjustment alters the resolution of the mass spectrometer, resolution shall be verified (Section 10.1.2) prior to repeat of the verification test.

15.3.3 The peaks representing each CDD/CDF and labeled compound in the VER standard must be present with S/N of at least 10; otherwise, the mass spectrometer shall be adjusted and the verification test repeated.

15.3.4 Compute the concentration of each CDD/CDF compound by isotope dilution (Section 10.5) for those compounds that have labeled analogs (Table 1). Compute the concentration of the labeled compounds by the internal standard method (Section 10.6). These concentrations are computed based on the calibration data in Section 10.

15.3.5 For each compound, compare the concentration with the calibration verification limit in Table 6. If only 2,3,7,8-TCDD and 2,3,7,8-TCDF are to be determined, compare the concentration to the limit in Table 6a. If all compounds meet the acceptance criteria, calibration has been verified and analysis of standards and sample extracts may proceed. If, however, any compound fails its respective limit, the measurement system is not performing properly for that compound. In this event, prepare a fresh calibration standard or correct the problem causing the failure and repeat the resolution (Section 15.2) and verification (Section 15.3) tests, or recalibrate (Section 10).

15.4 Retention Times and GC Resolution.

15.4.1 Retention times.

15.4.1.1 Absolute—The absolute retention times of the $^{13}C_{12}$-1,2,3,4–TCDD and $^{13}C_{12}$-1,2,3,7,8,9-HxCDD GCMS internal standards in the verification test (Section 15.3) shall be within ±15 seconds of the retention times obtained during calibration (Sections 10.2.1 and 10.2.4).

15.4.1.2 Relative—The relative retention times of CDDs/CDFs and labeled compounds in the verification test (Section 15.3) shall be within the limits given in Table 2.

15.4.2 GC resolution.

15.4.2.1 Inject the isomer specificity standards (Section 7.15) on their respective columns.

15.4.2.2 The valley height between 2,3,7,8-TCDD and the other tetra-dioxin isomers at m/z 319.8965, and between 2,3,7,8-TCDF and the other tetra-furan isomers at m/z 303.9016 shall not exceed 25% on their respective columns (Figures 6 and 7).

15.4.3 If the absolute retention time of any compound is not within the limits specified or if the 2,3,7,8-isomers are not resolved, the GC is not performing properly. In this event, adjust the GC and repeat the verification test (Section 15.3) or recalibrate (Section 10), or replace the GC column and either verify calibration or recalibrate.

15.5 Ongoing Precision and Recovery.

15.5.1 Analyze the extract of the ongoing precision and recovery (OPR) aliquot (Section 11.4.2.5, 11.5.4, 11.6.2, 11.7.4, or 11.8.3.2) prior to analysis of samples from the same batch.

15.5.2 Compute the concentration of each CDD/CDF by isotope dilution for those compounds that have labeled analogs (Section 10.5). Compute the concentration of 1,2,3,7,8,9-HxCDD, OCDF, and each labeled compound by the internal standard method (Section 10.6).

15.5.3 For each CDD/CDF and labeled compound, compare the concentration to the OPR limits given in Table 6. If only 2,3,7,8-TCDD and 2,3,7,8-TCDF are to be determined, compare the concentration to the limits in Table 6a. If all compounds meet the acceptance criteria, system performance is acceptable and analysis of blanks and samples may proceed. If, however, any individual concentration falls outside of the range given, the extraction/concentration processes are not being performed properly for that compound. In this event, correct the problem, re-prepare, extract, and clean up the sample batch and repeat the ongoing precision and recovery test (Section 15.5).

15.5.4 Add results that pass the specifications in Section 15.5.3 to initial and previous ongoing data for each compound in each matrix. Update QC charts to form a graphic representation of continued laboratory performance. Develop a statement of laboratory accuracy for each CDD/CDF in each matrix type by calculating the average percent recovery (R) and the standard deviation of percent recovery (S_R). Express the accuracy as a recovery interval from $R-2S_R$ to $R+2S_R$. For example, if R=95% and S_R=5%, the accuracy is 85–105%.

15.6 Blank—Analyze the method blank extracted with each sample batch immediately following analysis of the OPR aliquot to demonstrate freedom from contamination and freedom from carryover from the OPR analysis. The results of the analysis of the blank must meet the specifications in Section 9.5.2 before sample analyses may proceed.

16.0 Qualitative Determination

A CDD, CDF, or labeled compound is identified in a standard, blank, or sample when all of the criteria in Sections 16.1 through 16.4 are met.

16.1 The signals for the two exact m/z's in Table 8 must be present and must maximize within the same two seconds.

16.2 The signal-to-noise ratio (S/N) for the GC peak at each exact m/z must be greater than or equal to 2.5 for each CDD or CDF detected in a sample extract, and greater than or equal to 10 for all CDDs/CDFs in the calibration standard (Sections 10.2.3 and 15.3.3).

16.3 The ratio of the integrated areas of the two exact m/z's specified in Table 8 must be within the limit in Table 9, or within ±10% of the ratio in the midpoint (CS3) calibration or calibration verification (VER), whichever is most recent.

16.4 The relative retention time of the peak for a 2,3,7,8-substituted CDD or CDF must be within the limit in Table 2. The retention time of peaks representing non-2,3,7,8-substituted CDDs/CDFs must be within the retention time windows established in Section 10.3.

16.5 Confirmatory Analysis—Isomer specificity for 2,3,7,8-TCDF cannot be achieved on the DB–5 column. Therefore, any sample in which 2,3,7,8-TCDF is identified by analysis on a DB–5 column must have a confirmatory analysis performed on a DB–225, SP–2330, or equivalent GC column. The operating conditions in Section 10.1.1 may be adjusted to optimize the analysis on the second GC column, but the GC/MS must meet the mass resolution

and calibration specifications in Section 10.

16.6 If the criteria for identification in Sections 16.1 through 16.5 are not met, the CDD or CDF has not been identified and the results may not be reported for regulatory compliance purposes. If interferences preclude identification, a new aliquot of sample must be extracted, further cleaned up, and analyzed.

17.0 Quantitative Determination

17.1 Isotope Dilution Quantitation—By adding a known amount of a labeled compound to every sample prior to extraction, correction for recovery of the CDD/CDF can be made because the CDD/CDF and its labeled analog exhibit similar effects upon extraction, concentration, and gas chromatography. Relative response (RR) values are used in conjunction with the initial calibration data described in Section 10.5 to determine concentrations directly, so long as labeled compound spiking levels are constant, using the following equation:

$$C_{ex}\ (\text{ng/mL}) = \frac{(A1_n + A2_n)\,C_l}{(A1_l + A2_l)\,RR}$$

Where:

C_{ex} = The concentration of the CDD/CDF in the extract, and the other terms are as defined in Section 10.5.2.

17.1.1 Because of a potential interference, the labeled analog of OCDF is not added to the sample. Therefore, OCDF is quantitated against labeled OCDD. As a result, the concentration of OCDF is corrected for the recovery of the labeled OCDD. In instances where OCDD and OCDF behave differently during sample extraction, concentration, and cleanup procedures, this may decrease the accuracy of the OCDF results. However, given the low toxicity of this compound relative to the other dioxins and furans, the potential decrease in accuracy is not considered significant.

17.1.2 Because $^{13}C_{12}$-1,2,3,7,8,9-HxCDD is used as an instrument internal standard (i.e., not added before extraction of the sample), it cannot be used to quantitate the 1,2,3,7,8,9-HxCDD by strict isotope dilution procedures. Therefore, 1,2,3,7,8,9-HxCDD is quantitated using the averaged response of the labeled analogs of the other two 2,3,7,8-substituted HxCDD's: 1,2,3,4,7,8-HxCDD and 1,2,3,6,7,8-HxCDD. As a result, the concentration of 1,2,3,7,8,9-HxCDD is corrected for the average recovery of the other two HxCDD's.

17.1.3 Any peaks representing non-2,3,7,8-substituted CDDs/CDFs are quantitated using an average of the response factors from all of the labeled 2,3,7,8-isomers at the same level of chlorination.

17.2 Internal Standard Quantitation and Labeled Compound Recovery.

17.2.1 Compute the concentrations of 1,2,3,7,8,9-–HxCDD, OCDF, the ^{13}C-labeled analogs and the ^{37}C-labeled cleanup standard in the extract using the response factors determined from the initial calibration data (Section 10.6) and the following equation:

$$C_{ex}\ (\text{ng/mL}) = \frac{(A1_s + A2_s)\,C_{is}}{(A1_{is} + A2_{is})\,RF}$$

Where:

C_{ex} = The concentration of the CDD/CDF in the extract, and the other terms are as defined in Section 10.6.1.

Note: There is only one m/z for the ^{37}Cl-labeled standard.

17.2.2 Using the concentration in the extract determined above, compute the percent recovery of the ^{13}C-labeled compounds and the ^{37}C-labeled cleanup standard using the following equation:

$$\text{Recovery (\%)} = \frac{\text{Concentration found (}\mu\text{g/mL)}}{\text{Concentration spiked (}\mu\text{g/mL)}} \times 100$$

17.3 The concentration of a CDD/CDF in the solid phase of the sample is computed using the concentration of the compound in the extract and the weight of the solids (Section 11.5.1), as follows:

$$\text{Concentration in solid (ng/kg)} = \frac{(C_{ex} \times V_{ex})}{W_s}$$

Where:

C_{ex} = The concentration of the compound in the extract.
V_{ex} = The extract volume in mL.
W_s = The sample weight (dry weight) in kg.

17.4 The concentration of a CDD/CDF in the aqueous phase of the sample is computed using the concentration of the compound in the extract and the volume of water extracted (Section 11.4 or 11.5), as follows:

$$\text{Concentration in aqueous phase (pg/L)} = \frac{(C_{ex} \times V_{ex})}{V_s}$$

Where:

C_{ex} = The concentration of the compound in the extract.

V_{ex} = The extract volume in mL.

V_s = The sample volume in liters.

17.5 If the SICP area at either quantitation m/z for any compound exceeds the calibration range of the system, a smaller sample aliquot is extracted.

17.5.1 For aqueous samples containing 1% solids or less, dilute 100 mL, 10 mL, etc., of sample to 1 L with reagent water and re-prepare, extract, clean up, and analyze per Sections 11 through 14.

17.5.2 For samples containing greater than 1% solids, extract an amount of sample equal to 1/10, 1/100, etc., of the amount used in Section 11.5.1. Re-prepare, extract, clean up, and analyze per Sections 11 through 14.

17.5.3 If a smaller sample size will not be representative of the entire sample, dilute the sample extract by a factor of 10, adjust the concentration of the instrument internal standard to 100 pg/µL in the extract, and analyze an aliquot of this diluted extract by the internal standard method.

17.6 Results are reported to three significant figures for the CDDs/CDFs and labeled compounds found in all standards, blanks, and samples.

17.6.1 Reporting units and levels.

17.6.1.1 Aqueous samples—Report results in pg/L (parts-per-quadrillion).

17.6.1.2 Samples containing greater than 1% solids (soils, sediments, filter cake, compost)—Report results in ng/kg based on the dry weight of the sample. Report the percent solids so that the result may be corrected.

17.6.1.3 Tissues—Report results in ng/kg of wet tissue, not on the basis of the lipid content of the sample. Report the percent lipid content, so that the data user can calculate the concentration on a lipid basis if desired.

17.6.1.4 Reporting level.

17.6.1.4.1 Standards (VER, IPR, OPR) and samples—Report results at or above the minimum level (Table 2). Report results below the minimum level as not detected or as required by the regulatory authority.

17.6.1.4.2 Blanks—Report results above one-third the ML.

17.6.2 Results for CDDs/CDFs in samples that have been diluted are reported at the least dilute level at which the areas at the quantitation m/z's are within the calibration range (Section 17.5).

17.6.3 For CDDs/CDFs having a labeled analog, results are reported at the least dilute level at which the area at the quantitation m/z is within the calibration range (Section 17.5) and the labeled compound recovery is within the normal range for the method (Section 9.3 and Tables 6, 6a, 7, and 7a).

17.6.4 Additionally, if requested, the total concentration of all isomers in an individual level of chlorination (i.e., total TCDD, total TCDF, total Paced, etc.) may be reported by summing the concentrations of all isomers identified in that level of chlorination, including both 2,3,7,8-substituted and non-2,3,7,8-substituted isomers.

18.0 Analysis of Complex Samples

18.1 Some samples may contain high levels (>10 ng/L; >1000 ng/kg) of the compounds of interest, interfering compounds, and/or polymeric materials. Some extracts will not concentrate to 10 µL (Section 12.7); others may overload the GC column and/or mass spectrometer.

18.2 Analyze a smaller aliquot of the sample (Section 17.5) when the extract will not concentrate to 10 µL after all cleanup procedures have been exhausted.

18.3 Chlorodiphenyl Ethers—If chromatographic peaks are detected at the retention time of any CDDs/CDFs in any of the m/z channels being monitored for the chlorodiphenyl ethers (Table 8), cleanup procedures must be employed until these interferences are removed. Alumina (Section 13.4) and Florisil (Section 13.8) are recommended for removal of chlorodiphenyl ethers.

18.4 Recovery of Labeled Compounds—In most samples, recoveries of the labeled compounds will be similar to those from reagent water or from the alternate matrix (Section 7.6).

18.4.1 If the recovery of any of the labeled compounds is outside of the normal range (Table 7), a diluted sample shall be analyzed (Section 17.5).

18.4.2 If the recovery of any of the labeled compounds in the diluted sample is outside of normal range, the calibration verification standard (Section 7.13) shall be analyzed and calibration verified (Section 15.3).

18.4.3 If the calibration cannot be verified, a new calibration must be performed and the original sample extract reanalyzed.

18.4.4 If the calibration is verified and the diluted sample does not meet the limits for labeled compound recovery, the method does not apply to the sample being analyzed and the result may not be reported for regulatory compliance purposes. In this case, alternate extraction and cleanup procedures in this method must be employed to resolve the interference. If all cleanup procedures in this method have been employed and labeled compound recovery remains outside of the normal range, extraction and/or cleanup procedures that are beyond this scope of this method will be required to analyze these samples.

19.0 Pollution Prevention

19.1 The solvents used in this method pose little threat to the environment when managed properly. The solvent evaporation techniques used in this method are amenable to solvent recovery, and it is recommended that the laboratory recover solvents wherever feasible.

19.2 Standards should be prepared in volumes consistent with laboratory use to minimize disposal of standards.

20.0 Waste Management

20.1 It is the laboratory's responsibility to comply with all federal, state, and local regulations governing waste management, particularly the hazardous waste identification rules and land disposal restrictions, and to protect the air, water, and land by minimizing and controlling all releases from fume hoods and bench operations. Compliance is also required with any sewage discharge permits and regulations.

20.2 Samples containing HCl to pH <2 are hazardous and must be neutralized before being poured down a drain or must be handled as hazardous waste.

20.3 The CDDs/CDFs decompose above 800°C. Low-level waste such as absorbent paper, tissues, animal remains, and plastic gloves may be burned in an appropriate incinerator. Gross quantities (milligrams) should be packaged securely and disposed of through commercial or governmental channels that are capable of handling extremely toxic wastes.

20.4 Liquid or soluble waste should be dissolved in methanol or ethanol and irradiated with ultraviolet light with a wavelength shorter than 290 nm for several days. Use F40 BL or equivalent lamps. Analyze liquid wastes, and dispose of the solutions when the CDDs/CDFs can no longer be detected.

20.5 For further information on waste management, consult ''The Waste Management Manual for Laboratory Personnel'' and ''Less is Better—Laboratory Chemical Management for Waste Reduction,'' available from the American Chemical Society's Department of Government Relations and Science Policy, 1155 16th Street N.W., Washington, D.C. 20036.

21.0 Method Performance

Method performance was validated and performance specifications were developed using data from EPA's international interlaboratory validation study (References 30–31) and the EPA/paper industry Long-Term Variability Study of discharges from the pulp and paper industry (58 FR 66078).

22.0 References

1. Tondeur, Yves. ''Method 8290: Analytical Procedures and Quality Assurance for Multimedia Analysis of Polychlorinated Dibenzo-*p*-dioxins and Dibenzofurans by High Resolution Gas Chromatography/High Resolution Mass Spectrometry,'' USEPA EMSL, Las Vegas, Nevada, June 1987.

2. ''Measurement of 2,3,7,8-Tetrachlorinated Dibenzo-*p*-dioxin (TCDD) and 2,3,7,8-Tetrachlorinated Dibenzofuran (TCDF) in Pulp, Sludges, Process Samples and Wastewaters from Pulp and Paper Mills,'' Wright State University, Dayton, OH 45435, June 1988.

3. ''NCASI Procedures for the Preparation and Isomer Specific Analysis of Pulp and Paper Industry Samples for 2,3,7,8-TCDD and 2,3,7,8-TCDF,'' National Council of the Paper Industry for Air and Stream

Improvement Inc., 260 Madison Avenue, New York, NY 10016, Technical Bulletin No. 551, Pre-Release Copy, July 1988.

4. ''Analytical Procedures and Quality Assurance Plan for the Determination of PCDD/PCDF in Fish,'' USEPA, Environmental Research Laboratory, 6201 Congdon Boulevard, Duluth, MN 55804, April 1988.

5. Tondeur, Yves. ''Proposed GC/MS Methodology for the Analysis of PCDDs and PCDFs in Special Analytical Services Samples,'' Triangle Laboratories, Inc., 801–10 Capitola Dr, Research Triangle Park, NC 27713, January 1988; updated by personal communication September 1988.

6. Lamparski, L.L. and Nestrick, T.J. ''Determination of Tetra-, Hexa-, Hepta-, and Octachlorodibenzo-*p*-dioxin Isomers in Particulate Samples at Parts per Trillion Levels,'' Analytical Chemistry, 52: 2045–2054, 1980.

7. Lamparski, L.L. and Nestrick, T.J. ''Novel Extraction Device for the Determination of Chlorinated Dibenzo-*p*-dioxins (PCDDs) and Dibenzofurans (PCDFs) in Matrices Containing Water,'' Chemosphere, 19:27–31, 1989.

8. Patterson, D.G., et. al. ''Control of Interferences in the Analysis of Human Adipose Tissue for 2,3,7,8-Tetrachlorodibenzo-*p*-dioxin,'' Environmental Toxicological Chemistry, 5:355–360, 1986.

9. Stanley, John S. and Sack, Thomas M. ''Protocol for the Analysis of 2,3,7,8-Tetrachlorodibenzo-*p*-dioxin by High Resolution Gas Chromatography/High Resolution Mass Spectrometry,'' USEPA EMSL, Las Vegas, Nevada 89114, EPA 600/4–86–004, January 1986.

10. ''Working with Carcinogens,'' Department of Health, Education, & Welfare, Public Health Service, Centers for Disease Control, NIOSH, Publication 77–206, August 1977, NTIS PB–277256.

11. ''OSHA Safety and Health Standards, General Industry,'' OSHA 2206, 29 CFR 1910.

12. ''Safety in Academic Chemistry Laboratories,'' ACS Committee on Chemical Safety, 1979.

13. ''Standard Methods for the Examination of Water and Wastewater,'' 18th edition and later revisions, American Public Health Association, 1015 15th St, N.W., Washington, DC 20005, 1–35: Section 1090 (Safety), 1992.

14. ''Method 613—2,3,7,8-Tetrachlorodibenzo-p-dioxin,'' 40 CFR 136 (49 FR 43234), October 26, 1984, Section 4.1.

15. Provost, L.P. and Elder, R.S. ''Interpretation of Percent Recovery Data,'' American Laboratory, 15: 56–83, 1983.

16. ''Standard Practice for Sampling Water,'' ASTM Annual Book of Standards, ASTM, 1916 Race Street, Philadelphia, PA 19103–1187, 1980.

17. ''Methods 330.4 and 330.5 for Total Residual Chlorine,'' USEPA, EMSL, Cincinnati, OH 45268, EPA 600/4–79–020, March 1979.

18. ''Handbook of Analytical Quality Control in Water and Wastewater Laboratories,'' USEPA EMSL, Cincinnati, OH 45268, EPA–600/4–79–019, March 1979.

19. Williams, Rick. Letter to Bill Telliard, June 4, 1993, available from the EPA Sample Control Center operated by DynCorp Viar, Inc., 300 N Lee St, Alexandria, VA 22314, 703–519–1140.

20. Barkowski, Sarah. Fax to Sue Price, August 6, 1992, available from the EPA Sample Control Center operated by DynCorp Viar, Inc., 300 N Lee St, Alexandria VA 22314, 703–519–1140.

21. ''Analysis of Multi-media, Multi-concentration Samples for Dioxins and Furans, PCDD/PCDF Analyses Data Package'', Narrative for Episode 4419, MRI Project No. 3091-A, op.cit. February 12, 1993, Available from the EPA Sample Control Center operated by DynCorp Viar Inc, 300 N Lee St, Alexandria, VA 22314 (703–519–1140).

22. ''Analytical Procedures and Quality Assurance Plan for the Determination of PCDD/PCDF in Fish'', U.S. Environmental Protection Agency, Environmental Research Laboratory, Duluth, MN 55804, EPA/600/3–90/022, March 1990.

23. Afghan, B.K., Carron, J., Goulden, P.D., Lawrence, J., Leger, D., Onuska, F., Sherry, J., and Wilkenson, R.J., ''Recent Advances in Ultratrace Analysis of Dioxins and Related Halogenated Hydrocarbons'', Can J. Chem., 65: 1086–1097, 1987.

24. Sherry, J.P. and Tse, H. ''A Procedure for the Determination of Polychlorinated Dibenzo-p-dioxins in Fish'', Chemosphere, 20: 865–872, 1990.

25. ''Preliminary Fish Tissue Study'', Results of Episode 4419, available from the EPA Sample Control Center operated by DynCorp Viar, Inc., 300 N Lee St, Alexandria, VA 22314, 703–519–1140.

26. Nestrick, Terry L. DOW Chemical Co., personal communication with D.R. Rushneck, April 8, 1993. Details available from the U.S. Environmental Protection Agency Sample Control Center operated by DynCorp Viar Inc, 300 N Lee St, Alexandria, VA 22314, 703–519–1140.

27. Barnstadt, Michael. ''Big Fish Column'', Triangle Laboratories of RTP, Inc., SOP 129–90, 27 March 27, 1992.

28. ''Determination of Polychlorinated Dibenzo-p-Dioxins (PCDD) and Dibenzofurans (PCDF) in Environmental Samples Using EPA Method 1613'', Chemical Sciences Department, Midwest Research Institute, 425 Volker Boulevard, Kansas City, MO 44110–2299, Standard Operating Procedure No. CS–153, January 15, 1992.

29. Ryan, John J. Raymonde Lizotte and William H. Newsome, J. Chromatog. 303 (1984) 351-360.

30. Telliard, William A., McCarty, Harry B., and Riddick, Lynn S. ''Results of the Interlaboratory Validation Study of USEPA Method 1613 for the Analysis of Tetra-through Octachlorinated Dioxins and Furans by Isotope Dilution GC/MS,'' Chemosphere, 27, 41–46 (1993).

31. ''Results of the International Interlaboratory Validation Study of USEPA Method 1613'', October 1994, available from the EPA Sample Control Center operated by DynCorp Viar, Inc., 300 N Lee St, Alexandria, VA 22314, 703–519–1140.

23.0 Tables and Figures

TABLE 1.—CHLORINATED DIBENZO-P-DIOXINS AND FURANS DETERMINED BY ISOTOPE DILUTION AND INTERNAL STANDARD HIGH RESOLUTION GAS CHROMATOGRAPHY (HRGC)/HIGH RESOLUTION MASS SPECTROMETRY (HRMS)

CDDs/CDFs [1]	CAS registry	Labeled analog	CAS registry
2,3,7,8-TCDD	1746–01–6	$^{13}C_{12}$-2,3,7,8-TCDD	76523–40–5
		$^{37}Cl_4$-2,3,7,8-TCDD	85508–50–5
Total TCDD	41903–57–5		
2,3,7,8-TCDF	51207–31–9	$^{13}C_{12}$-2,3,7,8-TCDF	89059–46–1
Total-TCDF	55722–27–5		
1,2,3,7,8-PeCDD	40321–76–4	$^{13}C_{12}$-1,2,3,7,8-PeCDD	109719–79–1
Total-PeCDD	36088–22–9		
1,2,3,7,8-PeCDF	57117–41–6	$^{13}C_{12}$-1,2,3,7,8-PeCDF	109719–77–9

TABLE 1.—CHLORINATED DIBENZO-P-DIOXINS AND FURANS DETERMINED BY ISOTOPE DILUTION AND INTERNAL STANDARD HIGH RESOLUTION GAS CHROMATOGRAPHY (HRGC)/HIGH RESOLUTION MASS SPECTROMETRY (HRMS)—Continued

CDDs/CDFs [1]	CAS registry	Labeled analog	CAS registry
2,3,4,7,8-PeCDF	57117–31–4	$^{13}C_{12}$-2,3,4,7,8-PeCDF	116843–02–8
Total-PeCDF	30402–15–4		
1,2,3,4,7,8-HxCDD	39227–28–6	$^{13}C_{12}$-1,2,3,4,7,8-HxCDD	109719–80–4
1,2,3,6,7,8-HxCDD	57653–85–7	$^{13}C_{12}$-1,2,3,6,7,8-HxCDD	109719–81–5
1,2,3,7,8,9-HxCDD	19408–74–3	$^{13}C_{12}$-1,2,3,7,8,9-HxCDD	109719–82–6
Total-HxCDD	34465–46–8		
1,2,3,4,7,8-HxCDF	70648–26–9	$^{13}C_{12}$-1,2,3,4,7,8-HxCDF	114423–98–2
1,2,3,6,7,8-HxCDF	57117–44–9	$^{13}C_{12}$-1,2,3,6,7,8-HxCDF	116843–03–9
1,2,3,7,8,9-HxCDF	72918–21–9	$^{13}C_{12}$-1,2,3,7,8,9-HxCDF	116843–04–0
2,3,4,6,7,8-HxCDF	60851–34–5	$^{13}C_{12}$-2,3,4,6,7,8-HxCDF	116843–05–1
Total-HxCDF	55684–94–1		
1,2,3,4,6,7,8-HpCDD	35822–46–9	$^{13}C_{12}$-1,2,3,4,6,7,8-HpCDD	109719–83–7
Total-HpCDD	37871–00–4		
1,2,3,4,6,7,8-HpCDF	67562–39–4	$^{13}C_{12}$-1,2,3,4,6,7,8-HpCDF	109719–84–8
1,2,3,4,7,8,9-HpCDF	55673–89–7	$^{13}C_{12}$-1,2,3,4,7,8,9-HpCDF	109719–94–0
Total-HpCDF	38998–75–3		
OCDD	3268–87–9	$^{13}C_{12}$-OCDD	114423–97–1
OCDF	39001–02–0	Not used.	

[1] Chlorinated dibenzo-p-dioxins and chlorinated dibenzofurans.
TCDD = Tetrachlorodibenzo-p-dioxin.
TCDF = Tetrachlorodibenzofuran.
PeCDD = Pentachlorodibenzo-p-dioxin.
PeCDF = Pentachlorodibenzofuran.
HxCDD = Hexachlorodibenzo-p-dioxin.
HxCDF = Hexachlorodibenzofuran.
HpCDD = Heptachlorodibenzo-p-dioxin.
HpCDF = Heptachlorodibenzofuran.
OCDD = Octachlorodibenzo-p-dioxin.
OCDF = Octachlorodibenzofuran.

TABLE 2.—RETENTION TIME REFERENCES, QUANTITATION REFERENCES, RELATIVE RETENTION TIMES, AND MINIMUM LEVELS FOR CDDS AND DCFS

CDD/CDF	Retention time and quantitation reference	Relative retention time	Minimum level [1]		
			Water (pg/L; ppq)	Solid (ng/kg; ppt)	Extract (pg/µL; ppb)
Compounds using ^{13}C12–1,2,3,4-TCDD as the Injection Internal Standard					
2,3,7,8-TCDF	$^{13}C_{12}$-2,3,7,8-TCDF	0.999–1.003	10	1	0.5
2,3,7,8-TCDD	$^{13}C_{12}$-2,3,7,8-TCDD	0.999–1.002	10	1	0.5
1,2,3,7,8-Pe	$^{13}C_{12}$-1,2,3,7,8-PeCDF	0.999–1.002	50	5	2.5
2,3,4,7,8-PeCDF	$^{13}C_{12}$-2,3,4,7,8-PeCDF	0.999–1.002	50	5	2.5
1,2,3,7,8-PeCDD	$^{13}C_{12}$-1,2,3,7,8-PeCDD	0.999–1.002	50	5	2.5
$^{13}C_{12}$-2,3,7,8-TCDF	$^{13}C_{12}$-1,2,3,4-TCDD	0.923–1.103	.....	.....	.....
$^{13}C_{12}$-2,3,7,8-TCDD	$^{13}C_{12}$-1,2,3,4-TCDD	0.976–1.043	.....	.....	.....
$^{13}C_{12}$-2,3,7,8-TCDD	$^{13}C_{12}$-1,2,3,4-TCDD	0.989–1.052	.....	.....	.....
$^{13}C_{12}$-1,2,3,7,8-PeCDF	$^{13}C_{12}$-1,2,3,4-TCDD	1.000–1.425	.....	.....	.....
$^{13}C_{12}$-2,3,4,7,8-PeCDF	$^{13}C_{12}$-1,2,3,4-TCDD	1.001–1.526	.....	.....	.....
$^{13}C_{12}$-1,2,3,7,8-PeCDF	$^{13}C_{12}$-1,2,3,4-TCDD	1.000–1.567	.....	.....	.....
Compounds using ^{13}C12–1,2,3,7,8,9-HxCDD as the Injection Internal Standard					
1,2,3,4,7,8-HxCDF	$^{13}C_{12}$-1,2,3,4,7,8-HxCDF	0.999–1.001	50	5	2.5
1,2,3,6,7,8-HxCDF	$^{13}C_{12}$-1,2,3,6,7,8-HxCDF	0.997–1.005	50	5	2.5
1,2,3,7,8,9-HxCDF	$^{13}C_{12}$-1,2,3,7,8,9-HxCDF	0.999–1.001	50	5	2.5
2,3,4,6,7,8-HxCDF	$^{13}C_{12}$-2,3,4,6,7,8-HxCDF	0.999–1.001	50	5	2.5
1,2,3,4,7,8-HxCDD	$^{13}C_{12}$-1,2,3,4,7,8-HxCDD	0.999–1.001	50	5	2.5
1,2,3,6,7,8-HxCDD	$^{13}C_{12}$-1,2,3,6,7,8-HxCDD	0.998–1.004	50	5	2.5
1,2,3,7,8,9-HxCDD	([2])	1.000–1.019	50	5	2.5
1,2,3,4,6,7,8-HpCDF	$^{13}C_{12}$-1,2,3,4,6,7,8-HpCDF	0.999–1.001	50	5	2.5
1,2,3,4,7,8,9-HpCDF	$^{13}C_{12}$-1,2,3,4,7,8,9-HpCDF	0.999–1.001	50	5	2.5
1,2,3,4,6,7,8-HpCDD	$^{13}C_{12}$-1,2,3,4,6,7,8-HpCDD	0.999–1.001	50	5	2.5
OCDF	$^{13}C_{12}$-OCDD	0.999–1.001	100	10	5.0
OCDD	$^{13}C_{12}$-OCDD	0.999–1.001	100	10	5.0
1,2,3,4,6,7,8,-HxCDF	$^{13}C_{12}$-1,2,3,7,8,9-HpCDD	0.949–0.975	.....	.....	.....
$^{13}C_{12}$1,2,3,7,8,9-HxCDF	$^{13}C_{12}$-1,2,3,7,8,9-HpCDD	0.977–1.047	.....	.....	.....
$^{13}C_{12}$2,3,4,6,7,8,-HxCDF	$^{13}C_{12}$-1,2,3,7,8,9-HpCDD	0.959–1.021	.....	.....	.....
$^{13}C_{12}$1,2,3,4,7,8,-HxCDF	$^{13}C_{12}$-1,2,3,7,8,9-HpCDD	0.977–1.000	.....	.....	.....

TABLE 2.—RETENTION TIME REFERENCES, QUANTITATION REFERENCES, RELATIVE RETENTION TIMES, AND MINIMUM LEVELS FOR CDDS AND DCFS—Continued

CDD/CDF	Retention time and quantitation reference	Relative retention time	Minimum level [1]		
			Water (pg/L; ppq)	Solid (ng/kg; ppt)	Extract (pg/µL; ppb)
$^{13}C_{12}$1,2,3,6,7,8,-HxCDF	$^{13}C_{12}$-1,2,3,7,8,9-HpCDD	0.981–1.003			
$^{13}C_{12}$1,2,3,4,6,7,8-HxCDF	$^{13}C_{12}$-1,2,3,7,8,9-HpCDD	1.043–1.085			
$^{13}C_{12}$1,2,3,4,7,8,9-HxCDF	$^{13}C_{12}$-1,2,3,7,8,9-HpCDD	1.057–1.151			
$^{13}C_{12}$1,2,3,4,6,7,8-HxCDF	$^{13}C_{12}$-1,2,3,7,8,9-HpCDD	1.086–1.110			
$^{13}C_{12}$OCDD	$^{13}C_{12}$-1,2,3,7,8,9-HpCDD	1.032–1.311			

[1] The Minimum Level (ML) for each analyte is defined as the level at which the entire analytical system must give a recognizable signal and acceptable calibration point. It is equivalent to the concentration of the lowest calibration standard, assuming that all method-specified sample weights, volumes, and cleanup procedures have been employed.

[2] The retention time reference for 1,2,3,7,8,9-HxCDD is $^{13}C_{12}$-1,2,3,6,7,8-HxCDD, and 1,2,3,7,8,9-HxCDD is quantified using the averaged responses for $^{13}C_{12}$-1,2,3,4,7,8-HxCDD and $^{13}C_{12}$-1,2,3,6,7,8-HxCDD.

TABLE 3.—CONCENTRATION OF STOCK AND SPIKING SOLUTIONS CONTAINING CDDS/CDFS AND LABELED COMPOUNDS

CDD/CDF	Labeled compound stock solution [1] (ng/mL)	Labeled compound spiking solution [2] (ng/mL)	PAR stock solution [3] (ng/mL)	PAR spiking solution [4] (ng/mL)
2,3,7,8-TCDD			40	0.8
2,3,7,8-TCDF			40	0.8
1,2,3,7,8-PeCDD			200	4
1,2,3,7,8-PeCDF			200	4
2,3,4,7,8-PeCDF			200	4
1,2,3,4,7,8-HxCDD			200	4
1,2,3,6,7,8-HxCDD			200	4
1,2,3,7,8,9-HxCDD			200	4
1,2,3,4,7,8-HxCDF			200	4
1,2,3,6,7,8-HxCDF			200	4
1,2,3,7,8,9-HxCDF			200	4
2,3,4,6,7,8-HxCDF			200	4
1,2,3,4,6,7,8-HpCDD			200	4
1,2,3,4,6,7,8-HpCDF			200	4
1,2,3,4,7,8,9-HpCDF			200	4
OCDD			400	8
OCDF			400	8
$^{13}C_{12}$-2,3,7,8-TCDD	100	2		
$^{13}C_{12}$-2,3,7,8-TCDF	100	2		
$^{13}C_{12}$-1,2,3,7,8-PeCDD	100	2		
$^{13}C_{12}$-1,2,3,7,8-PeCDF	100	2		
$^{13}C_{12}$-2,3,4,7,8-PeCDF	100	2		
$^{13}C_{12}$-1,2,3,4,7,8-HxCDD	100	2		
$^{13}C_{12}$-1,2,3,6,7,8-HxCDD	100	2		
$^{13}C_{12}$-1,2,3,4,7,8-HxCDF	100	2		
$^{13}C_{12}$-1,2,3,6,7,8-HxCDF	100	2		
$^{13}C_{12}$-1,2,3,7,8,9-HxCDF	100	2		
$^{13}C_{12}$-2,3,4,6,7,8-HxCDF	100	2		
$^{13}C_{12}$-1,2,3,4,6,7,8-HpCDD	100	2		
$^{13}C_{12}$-1,2,3,4,6,7,8-HpCDF	100	2		
$^{13}C_{12}$-1,2,3,4,7,8,9-HpCDF	100	2		
$^{13}C_{12}$-OCDD	200	4		
Cleanup Standard [5]				
$^{37}Cl_4$-2,3,7,8-TCDD	0.8			
Internal Standards [6]				
$^{13}C_{12}$-1,2,3,4-TCDD	200			
$^{13}C_{12}$-1,2,3,7,8,9-HxCDD	200			

[1] Section 7.10—prepared in nonane and diluted to prepare spiking solution.
[2] Section 7.10.3—prepared in acetone from stock solution daily.
[3] Section 7.9—prepared in nonane and diluted to prepare spiking solution.
[4] Section 7.14—prepared in acetone from stock solution daily.
[5] Section 7.11—prepared in nonane and added to extract prior to cleanup.
[6] Section 7.12—prepared in nonane and added to the concentrated extract immediately prior to injection into the GC (Section 14.2).

TABLE 4.—CONCENTRATION OF CDDS/CDFS IN CALIBRATION AND CALIBRATION VERIFICATION SOLUTIONS [1] (SECTION 15.3)

CDD/CDF	CS2 (ng/mL)	CS3 (ng/mL)	CS4 (ng/mL)	CS5 (ng/mL)
2,3,7,8-TCDD	0.5	2	10	40	200
2,3,7,8-TCDF	0.5	2	10	40	200
1,2,3,7,8-PeCDD	2.5	10	50	200	1000
1,2,3,7,8-PeCDF	2.5	10	50	200	1000
2,3,4,7,8-PeCDF	2.5	10	50	200	1000
1,2,3,4,7,8-HxCDD	2.5	10	50	200	1000
1,2,3,6,7,8-HxCDD	2.5	10	50	200	1000
1,2,3,7,8,9-HxCDD	2.5	10	50	200	1000
1,2,3,4,7,8-HxCDF	2.5	10	50	200	1000
1,2,3,6,7,8-HxCDF	2.5	10	50	200	1000
1,2,3,7,8,9-HxCDF	2.5	10	50	200	1000
2,3,4,6,7,8-HxCDF	2.5	10	50	200	1000
1,2,3,4,6,7,8-HpCDD	2.5	10	50	200	1000
1,2,3,4,6,7,8-HpCDF	2.5	10	50	200	1000
1,2,3,4,7,8,9-HpCDF	2.5	10	50	200	1000
OCDD	5.0	20	100	400	2000
OCDF	5.0	20	100	400	2000
$^{13}C_{12}$-2,3,7,8-TCDD	100	100	100	100	100
$^{13}C_{12}$-2,3,7,8-TCDF	100	100	100	100	100
$^{13}C_{12}$-1,2,3,7,8-PeCDD	100	100	100	100	100
$^{13}C_{12}$-PeCDF	100	100	100	100	100
$^{13}C_{12}$-2,3,4,7,8-PeCDF	100	100	100	100	100
$^{13}C_{12}$-1,2,3,4,7,8-HxCDD	100	100	100	100	100
$^{13}C_{12}$-1,2,3,6,7,8-HxCDD	100	100	100	100	100
$^{13}C_{12}$-1,2,3,4,7,8-HxCDF	100	100	100	100	100
$^{13}C_{12}$-1,2,3,6,7,8-HxCDF	100	100	100	100	100
$^{13}C_{12}$-1,2,3,7,8,9-HxCDF	100	100	100	100	100
$^{13}C_{12}$-1,2,3,4,6,7,8-HpCDD	100	100	100	100	100
$^{13}C_{12}$-1,2,3,4,6,7,8-HpCDF	100	100	100	100	100
$^{13}C_{12}$-1,2,3,4,7,8,9-Hp CDF	100	100	100	100	100
$^{13}C_{12}$-OCDD	200	200	200	200	200
Cleanup Standard:					
$^{37}C1_4$-2,3,7,8-TCDD	0.5	2	10	40	200
Internal Standards:					
$^{13}C_{12}$-1,2,3,4-TCDD	100	100	100	100	100
$^{13}C_{12}$-1,2,3,7,8,9-HxCDD	100	100	100	100	100

TABLE 5.—GC RETENTION TIME WINDOW DEFINING SOLUTION AND ISOMER SPECIFICITY TEST STANDARD (SECTION 7.15)

DB–5 column GC retention-time window defining solution

CDD/CDF	First eluted	Last eluted
TCDF	1,3,6,8-	1,2,8,9-
TCDD	1,3,6,8-	1,2,8,9-
PeCDF	1,3,4,6,8-	1,2,3,8,9-
PeCDD	1,2,4,7,9-	1,2,3,8,9-
HxCDF	1,2,3,4,6,8-	1,2,3,4,8,9-
HxCDD	1,2,4,6,7,9-	1,2,3,4,6,7-
HpCDF	1,2,3,4,6,7,8-	1,2,3,4,7,8,9-
HpCDD	1,2,3,4,6,7,9-	1,2,3,4,6,7,8-

DB–5 Column TCDD Specificity Test Standard

1,2,3,7+1,2,3,8-TCDD
2,3,7,8-TCDD
1,2,3,9-TCDD

DB–225 Column TCDF Isomer Specificity Test Standard

2,3,4,7-TCDF
2,3,7,8-TCDF
1,2,3,9-TCDF

TABLE 6.—ACCEPTANCE CRITERIA FOR PERFORMANCE TESTS WHEN ALL CDDS/CDFS ARE TESTED [1]

CDD/CDF	Test conc. (ng/mL)	IPR [2 3]		OPR (ng/mL)	VER (ng/mL)
		s (ng/mL)	X (ng/mL)		
2,3,7,8-TCDD	10	2.8	8.3–12.9	6.7–15.8	7.8–12.9

TABLE 6.—ACCEPTANCE CRITERIA FOR PERFORMANCE TESTS WHEN ALL CDDS/CDFS ARE TESTED [1]—Continued

CDD/CDF	Test conc. (ng/mL)	IPR [2 3]		OPR (ng/mL)	VER (ng/mL)
		s (ng/mL)	X (ng/mL)		
2,3,7,8-TCDF	10	2.0	8.7–13.7	7.5–15.8	8.4–12.0
1,2,3,7,8-PeCDD	50	7.5	38–66	35–71	39–65
1,2,3,7,8-PeCDF	50	7.5	43–62	40–67	41–60
2,3,4,7,8-PeCDF	50	8.6	36–75	34–80	41–61
1,2,3,4,7,8-HxCDD	50	9.4	39–76	35–82	39–64
1,2,3,6,7,8-HxCDD	50	7.7	42–62	38–67	39–64
1,2,3,7,8,9-HxCDD	50	11.1	37–71	32–81	41–61
1,2,3,4,7,8-HxCDF	50	8.7	41–59	36–67	45–56
1,2,3,6,7,8-HxCDF	50	6.7	46–60	42–65	44–57
1,2,3,7,8,9-HxCDF	50	6.4	42–61	39–65	45–56
2,3,4,6,7,8-HxCDF	50	7.4	37–74	35–78	44–57
1,2,3,4,6,7,8-HpCDD	50	7.7	38–65	35–70	43–58
1,2,3,4,6,7,8-HpCDF	50	6.3	45–56	41–61	45–55
1,2,3,4,7,8,9-HpCDF	50	8.1	43–63	39–69	43–58
OCDD	100	19	89–127	78–144	79–126
OCDF	100	27	74–146	63–170	63–159
$^{13}C_{12}$-2,3,7,8-TCDD	100	37	28–134	20–175	82–121
$^{13}C_{12}$-2,3,7,8-TCDF	100	35	31–113	22–152	71–140
$^{13}C_{12}$-1,2,3,7,8-PeCDD	100	39	27–184	21–227	62–160
$^{13}C_{12}$-1,2,3,7,8-PeCDF	100	34	27–156	21–192	76–130
$^{13}C_{12}$-2,3,4,7,8-PeCDF	100	38	16–279	13–328	77–130
$^{13}C_{12}$-1,2,3,4,7,8-HxCDD	100	41	29–147	21–193	85–117
$^{13}C_{12}$-1,2,3,6,7,8-HxCDD	100	38	34–122	25–163	85–118
$^{13}C_{12}$-1,2,3,4,7,8-HxCDF	100	43	27–152	19–202	76–131
$^{13}C_{12}$-1,2,3,6,7,8-HxCDF	100	35	30–122	21–159	70–143
$^{13}C_{12}$-1,2,3,7,8,9-HxCDF	100	40	24–157	17–205	74–135
$^{13}C_{12}$-2,3,4,6,7,8,-HxCDF	100	37	29–136	22–176	73–137
$^{13}C_{12}$-1,2,3,4,6,7,8-HpCDD	100	35	34–129	26–166	72–138
$^{13}C_{12}$-1,2,3,4,6,7,8-HpCDF	100	41	32–110	21–158	78–129
$^{13}C_{12}$-1,2,3,4,7,8,9-HpCDF	100	40	28–141	20–186	77–129
$^{13}C_{12}$-OCDD	200	95	41–276	26–397	96–415
$^{37}Cl_4$-2,3,7,8-TCDD	10	3.6	3.9–15.4	3.1–19.1	7.9–12.7

[1] All specifications are given as concentration in the final extract, assuming a 20 μL volume.
[2] s = standard deviation of the concentration.
[3] X = average concentration.

TABLE 6A.—ACCEPTANCE CRITERIA FOR PERFORMANCE TESTS WHEN ONLY TETRA COMPOUNDS ARE TESTED [1]

CDD/CDF	Test Conc. (ng/mL)	IPR [2 3]		OPR (ng/mL)	VER (ng/mL)
		s (ng/mL)	X (ng/mL)		
2,3,7,8-TCDD	10	2.7	8.7–12.4	7.314.6	8.2–12.3
2,3,7,8-TCDF	10	2.0	9.1–13.1	8.0–14.7	8.6–11.6
$^{13}C_{12}$-2,3,7,8-TCDD	100	35	32–115	25–141	85–117
$^{13}C_{12}$-2,3,7,8-TCDF	100	34	35–99	26–126	76–131
$^{37}C_{l4}$-2,3,7,8-TCDD	10	3.4	4.5–13.4	3.7–15.8	8.3–12.1

[1] All specifications are given as concentration in the final extract, assuming a 20 μL volume.
[2] s = standard deviation of the concentration.
[3] X = average concentration.

TABLE 7.—LABELED COMPOUNDS RECOVERY IN SAMPLES WHEN ALL CDDS/CDFS ARE TESTED

Compound	Test conc. (ng/mL)	Labeled compound recovery	
		(ng/mL) [1]	(%)
$^{13}C_{12}$-2,3,7,8-TCDD	100	25–164	25–164
$^{13}C_{12}$-2,3,7,8-TCDF	100	24–169	24–169
$^{13}C_{12}$-1,2,3,7,8-PeCDD	100	25–181	25–181
$^{13}C_{12}$-1,2,3,7,8-PeCDF	100	24–185	24–185
$^{13}C_{12}$-2,3,4,7,8-PeCDF	100	21–178	21–178
$^{13}C_{12}$-1,2,3,4,7,8-HxCDD	100	32–141	32–141
$^{13}C_{12}$-1,2,3,6,7,8-HxCDD	100	28–130	28–130
$^{13}C_{12}$-1,2,3,4,7,8-HxCDF	100	26–152	26–152
$^{13}C_{12}$-1,2,3,6,7,8-HxCDF	100	26–123	26–123
$^{13}C_{12}$-1,2,3,7,8,9-HxCDF	100	29–147	29–147

TABLE 7.—LABELED COMPOUNDS RECOVERY IN SAMPLES WHEN ALL CDDS/CDFS ARE TESTED—Continued

Compound	Test conc. (ng/mL)	Labeled compound recovery	
		(ng/mL) [1]	(%)
$^{13}C_{12}$-2,3,4,6,7,8-HxCDF	100	28–136	28–136
$^{13}C_{12}$-1,2,3,4,6,7,8-HpCDD	100	23–140	23–140
$^{13}C_{12}$-1,2,3,4,6,7,8-HpCDF	100	28–143	28–143
$^{13}C_{12}$-1,2,3,4,7,8,9-HpCDF	100	26–138	26–138
$^{13}C_{12}$-OCDD	200	34-313	17–157
$^{37}Cl_4$-2,3,7,8-TCDD	10	3.5–19.7	35–197

[1] Specification given as concentration in the final extract, assuming a 20-µL volume.

TABLE 7A.—LABELED COMPOUND RECOVERY IN SAMPLES WHEN ONLY TETRA COMPOUNDS ARE TESTED

Compound	Test conc. (ng/mL)	Labeled compound recovery	
		(ng/mL) [1]	(%)
$^{13}C_{12}$-2,3,7,8-TCDD	100	31–137	31–137
$^{13}C_{12}$-2,3,7,8-TCDF	100	29–140	29–140
$^{37}Cl_4$-2,3,7,8-TCDD	10	4.2–16.4	42–164

[1] Specification given as concentration in the final extract, assuming a 20 µL volume.

TABLE 8.—DESCRIPTORS, EXACT M/Z'S, M/Z TYPES, AND ELEMENTAL COMPOSITIONS OF THE CDDS AND CDFS

Descriptor	Exact M/Z [1]	M/Z type	Elemental composition	Substance [2]
1	292.9825	Lock	C_7F_{11}	PFK
	303.9016	M	$C_{12}H_4{}^{35}Cl_4O$	TCDF
	305.8987	M+2	$C_{12}H_4{}^{35}Cl_3{}^{37}{}_{ClO}$	TCDF
	315.9419	M	$^{13}C_{12}H_4{}^{35}Cl_4O$	TCDF [3]
	317.9389	M+2	$^{13}C_{12}H_4{}^{35}{}_{Cl3}{}^{37}ClO$	TCDF [3]
	319.8965	M	$C_{12}H_4{}^{35}Cl_4O_2$	TCDD
	321.8936	M+2	$C_{12}H_4{}^{35}Cl_3{}^{37}ClO_2$	TCDD
	327.8847	M	$C_{12}H_4{}^{37}Cl_4O_2$	TCDD [4]
	330.9792	QC	C_7F_{13}	PFK
	331.9368	M	$^{13}C_{12}H_4{}^{35}Cl_4O_2$	TCDD [3]
	333.9339	M+2	$^{13}C_{12}H_4{}^{35}Cl_3{}^{37}ClO_2$	TCDD [3]
	375.8364	M+2	$C_{12}H_4{}^{35}Cl_5{}^{37}ClO$	HxCDPE
2	339.8597	M+2	$C_{12}H_3{}^{35}Cl_4{}^{37}ClO$	PeCDF
	341.8567	M+4	$C_{12}H_3{}^{35}Cl_3{}^{37}Cl_2O$	PeCDF
	351.9000	M+2	$^{13}C_{12}H_3{}^{35}Cl_4{}^{37}ClO$	PeCDF
	353.8970	M+4	$^{13}C_{12}H_3{}^{35}Cl_3{}^{37}Cl_2O$	PeCDF [3]
	354.9792	Lock	C_9F_{13}	PFK
	355.8546	M+2	$C_{12}H_3{}^{35}Cl_4{}^{37}ClO_2$	PeCDD
	357.8516	M+4	$C_{12}H_3{}^{35}Cl_3{}^{37}Cl_2O_2$	PeCDD
	367.8949	M+2	$^{13}C_{12}H_3{}^{35}Cl_4{}^{37}ClO_2$	PeCDD [3]
	369.8919	M+4	$^{13}C_{12}H_3{}^{35}Cl_3{}^{37}Cl_2O_2$	PeCDD [3]
	409.7974	M+2	$C_{12}H_3{}^{35}Cl_6{}^{37}ClO$	HpCDPE
3	373.8208	M+2	$C_{12}H_2{}^{35}Cl_5{}^{37}ClO$	HxCDF
	375.8178	M+4	$C_{12}H_2{}^{35}Cl_4{}^{37}Cl_2O$	HxCDF
	383.8639	M	$^{13}C_{12}H_2{}^{35}Cl_6O$	HxCDF [3]
	385.8610	M+2	$^{13}C_{12}H_2{}^{35}Cl_5{}^{37}ClO$	HxCDF [3]
	389.8157	M+2	$C_{12}H_2{}^{35}Cl_5{}^{37}ClO_2$	HxCDD
	391.8127	M+4	$C_{12}H_2{}^{35}Cl_4{}^{37}Cl_2O_2$	HxCDD
	392.9760	Lock	C_9F_{15}	PFK
	401.8559	M+2	$^{13}C_{12}H_2{}^{35}Cl_5{}^{37}ClO_2$	HxCDD [3]
	403.8529	M+4	$^{13}C_{12}H_2{}^{35}Cl_4{}^{37}Cl_2O_2$	HxCDD [3]
	430.9729	QC	C_9F_{17}	PFK
	445.7555	M+4	$C_{12}H_2{}^{35}Cl_6{}^{37}Cl_2O$	OCDPE
4	407.7818	M+2	$C_{12}H^{35}Cl_6{}^{37}ClO$	HpCDF
	409.7789	M+4	$C_{12}H^{35}Cl_5{}^{37}Cl_2O$	HpCDF
	417.8253	M	$^{13}C_{12}H^{35}Cl_7O$	HpCDF [3]
	419.8220	M+2	$^{13}C_{12}H^{35}Cl_6{}^{37}ClO$	HpCDF [3]
	423.7766	M+2	$C_{12}H^{35}Cl_6{}^{37}ClO_2$	HpCDD
	425.7737	M+4	$C_{12}H^{35}Cl_5{}^{37}Cl_2O_2$	HpCDD
	430.9729	Lock	C_9F_{17}	PFK
	435.8169	M+2	$^{13}C_{12}H^{35}Cl_6{}^{37}ClO_2$	HpCDD [3]
	437.8140	M+4	$^{13}C_{12}H^{35}Cl_5{}^{37}Cl_2O_2$	HpCDD [3]
	479.7165	M+4	$C_{12}H^{35}Cl_7{}^{37}Cl_2O$	NCDPE

TABLE 8.—DESCRIPTORS, EXACT M/Z'S, M/Z TYPES, AND ELEMENTAL COMPOSITIONS OF THE CDDS AND CDFS—Continued

Descriptor	Exact M/Z [1]	M/Z type	Elemental composition	Substance [2]
5	441.7428	M+2	$C_{12}{}^{35}Cl_7{}^{37}ClO$	OCDF
	442.9728	Lock	$C_{10}F_{17}$	PFK
	443.7399	M+4	$C_{12}{}^{35}Cl_6{}^{37}Cl_2O$	OCDF
	457.7377	M+2	$C_{12}{}^{35}Cl_7{}^{37}ClO_2$	OCDD
	459.7348	M+4	$C_{12}{}^{35}Cl_6{}^{37}Cl_2O_2$	OCDD
	469.7779	M+2	$^{13}C_{12}{}^{35}Cl_7{}^{37}ClO_2$	OCDD[3]
	471.7750	M+4	$^{13}C_{12}{}^{35}Cl_6{}^{37}Cl_2O_2$	OCDD[3]
	513.6775	M+4	$C_{12}{}^{35}Cl_8{}^{37}Cl_2O$	DCDPE

[1] Nuclidic masses used:
H = 1.007825.
O = 15.994915.
C = 12.00000.
^{35}Cl = 34.968853.
^{13}C = 13.003355.
^{37}Cl = 36.965903.
F = 18.9984.

[2] TCDD = Tetrachlorodibenzo-p-dioxin.
PeCDD = Pentachlorodibenzo-p-dioxin.
HxCDD = Hexachlorodibenzo-p-dioxin.
HpCDD = Heptachlorodibenzo-p-dioxin.
OCDD = Octachlorodibenzo-p-dioxin.
HxCDPE = Hexachlorodiphenyl ether.
OCDPE = Octachlorodiphenyl ether.
DCDPE = Decachlorodiphenyl ether.
TCDF = Tetrachlorodibenzofuran.
PeCDF = Pentachlorodibenzofuran.
HxCDF = Hexachlorodibenzofuran.
HpCDF = Heptachlorodibenzofuran.
OCDF = Octachlorodibenzofuran.
HpCDPE = Heptachlorodiphenyl ether.
NCDPE = Nonachlorodiphenyl ether.
PFK = Perfluorokerosene.

[3] Labeled compound.

[4] There is only one m/z for $^{37}Cl_4$-2,3,7,8,-TCDD (cleanup standard).

TABLE 9.—THEORETICAL ION ABUNDANCE RATIOS AND QC LIMITS

Number of chlorine atoms	M/Z's forming ratio	Theoretical ratio	QC limit [1]	
			Lower	Upper
4 [2]	M/(M+2)	0.77	0.65	0.89
5	(M+2)/(M+4)	1.55	1.32	1.78
6	(M+2)/(M+4)	1.24	1.05	1.43
6 [3]	M/(M+2)	0.51	0.43	0.59
7	(M+2)/(M+4)	1.05	0.88	1.20
7 [4]	M/(M+2)	0.44	0.37	0.51
8	(M+2)/(M+4)	0.89	0.76	1.02

[1] QC limits represent ±15% windows around the theoretical ion abundance ratios.

[2] Does not apply to $^{37}Cl_4$-2,3,7,8-TCDD (cleanup standard).

[3] Used for $^{13}C_{12}$-HxCDF only.

[4] Used for $^{13}C_{12}$-HpCDF only.

TABLE 10.—SUGGESTED SAMPLE QUANTITIES TO BE EXTRACTED FOR VARIOUS MATRICES [1]

Sample Matrix [2]	Example	Percent solids	Phase	Quantity extracted
Single-phase:				
Aqueous	Drinking water	<1	([3])	1000 mL.
	Groundwater			
	Treated wastewater			
Solid	Dry soil	>20	Solid	10 g.
	Compost			
	Ash			
Organic	Waste solvent	<1	Organic	10 g.
	Waste oil			
	Organic polymer			
Tissue	Fish		Organic	10 g.
	Human adipose			
Multi-phase:				

TABLE 10.—SUGGESTED SAMPLE QUANTITIES TO BE EXTRACTED FOR VARIOUS MATRICES [1]—Continued

Sample Matrix [2]	Example	Percent solids	Phase	Quantity extracted
Liquid/Solid:				
Aqueous/Solid	Wet soil	1–30	Solid	10 g.
	Untreated effluent.			
	Digested municipal sludge.			
	Filter cake.			
	Paper pulp.			
Organic/solid	Industrial sludge	1–100	Both	10 g.
	Oily waste			
Liquid/Liquid:				
Aqueous/organic	In-process effluent	<1	Organic	10 g.
	Untreated effluent			
	Drum waste			
Aqueous/organic/solid	Untreated effluent	>1	Organic and solid	10 g.
	Drum waste			

[1] The quantity of sample to be extracted is adjusted to provide 10 g of solids (dry weight). One liter of aqueous samples containing 1% solids will contain 10 g of solids. For aqueous samples containing greater than 1% solids, a lesser volume is used so that 10 g of solids (dry weight) will be extracted.

[2] The sample matrix may be amorphous for some samples. In general, when the CDDs/CDFs are in contact with a multiphase system in which one of the phases is water, they will be preferentially dispersed in or adsorbed on the alternate phase because of their low solubility in water.

[3] Aqueous samples are filtered after spiking with the labeled compounds. The filtrate and the materials trapped on the filter are extracted separately, and the extracts are combined for cleanup and analysis.

BILLING CODE 6560–50–P

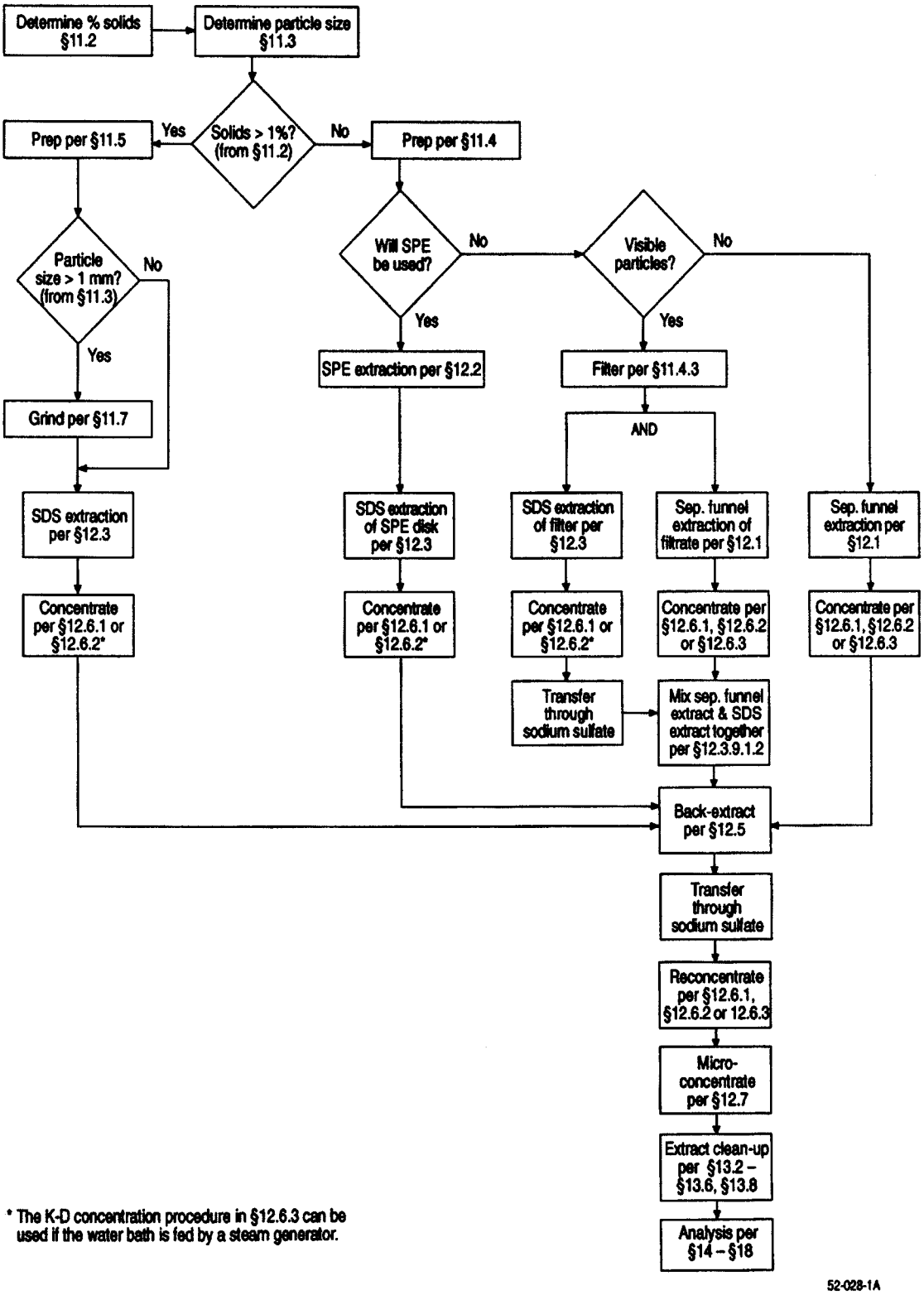

Figure 1. Flow Chart for Analysis of Aqueous and Solid Samples

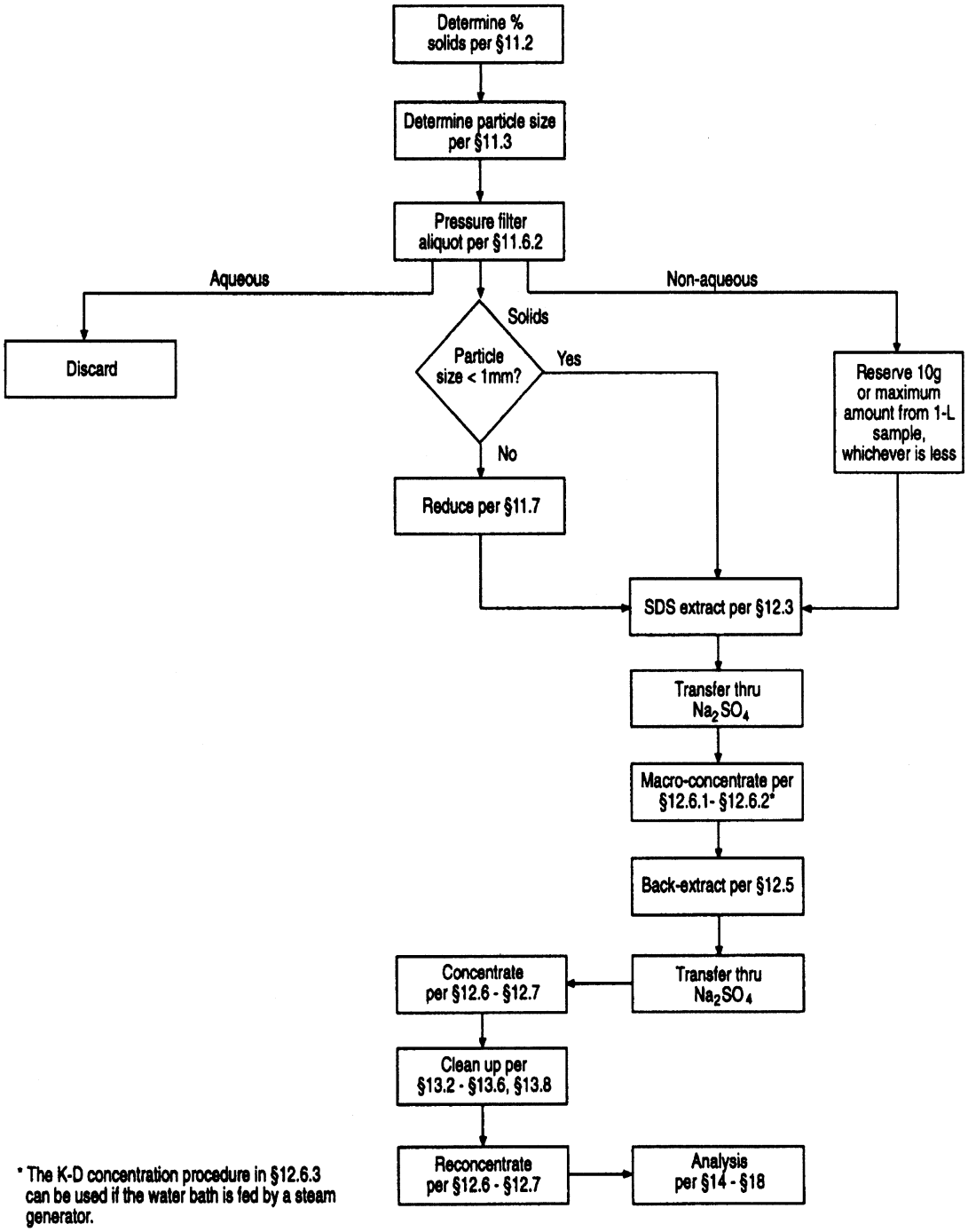

Figure 2. Flow Chart for Analysis of Multi-Phase Samples

52-028-2A

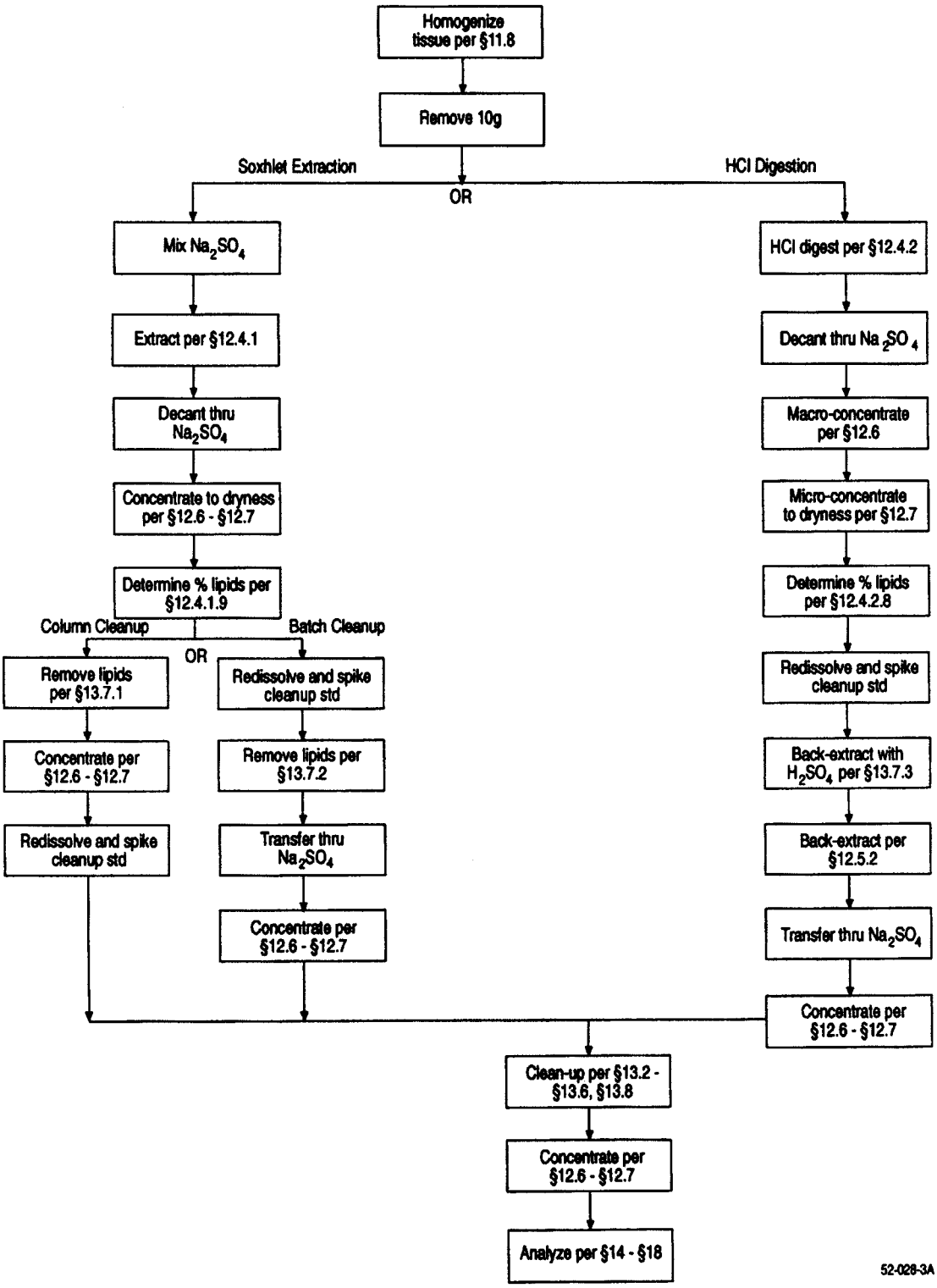

Figure 3. Flow Chart for Analysis of Tissue Samples

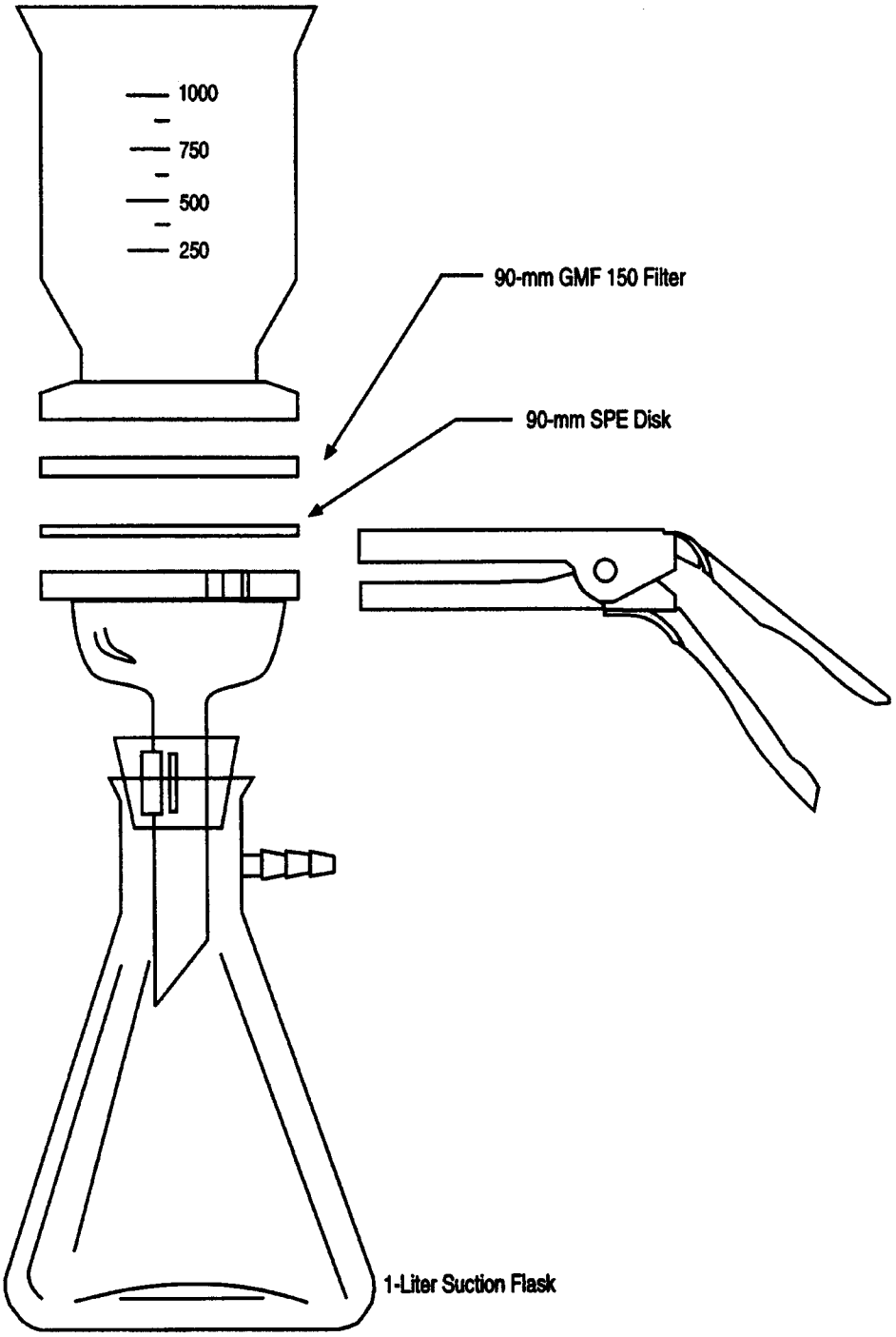

Figure 4. Solid-Phase Extraction Apparatus

52-027-1A

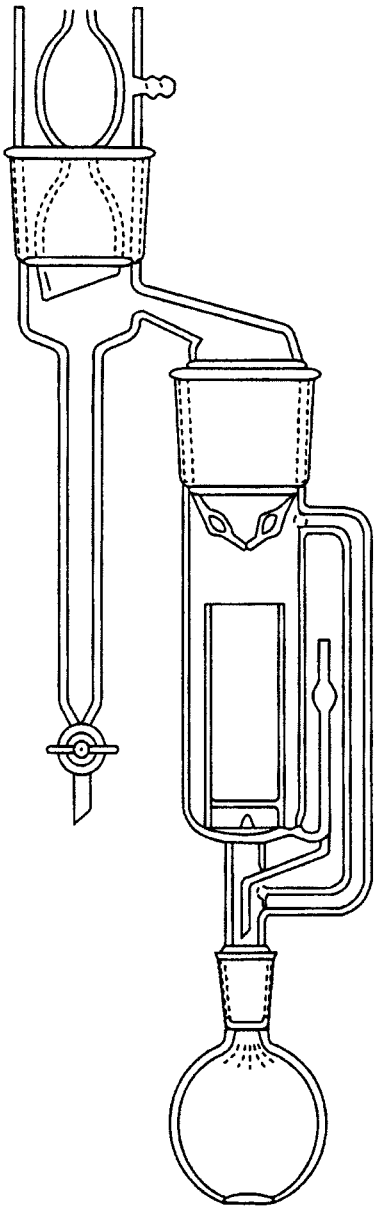

52-027-2A

Figure 5. Soxhlet/Dean-Stark Extractor

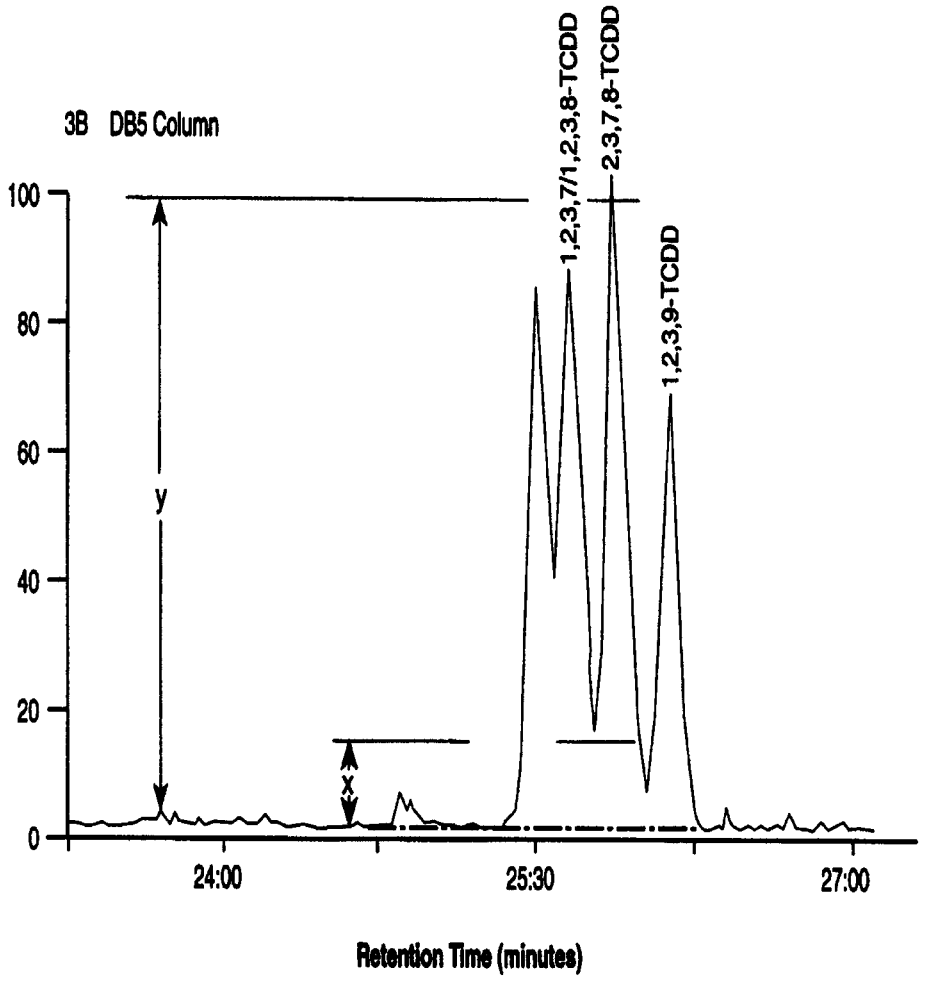

Figure 6. Isomer-Specific Separation of 2,3,7,8-TCDD on DB-5 Column

52-027-03

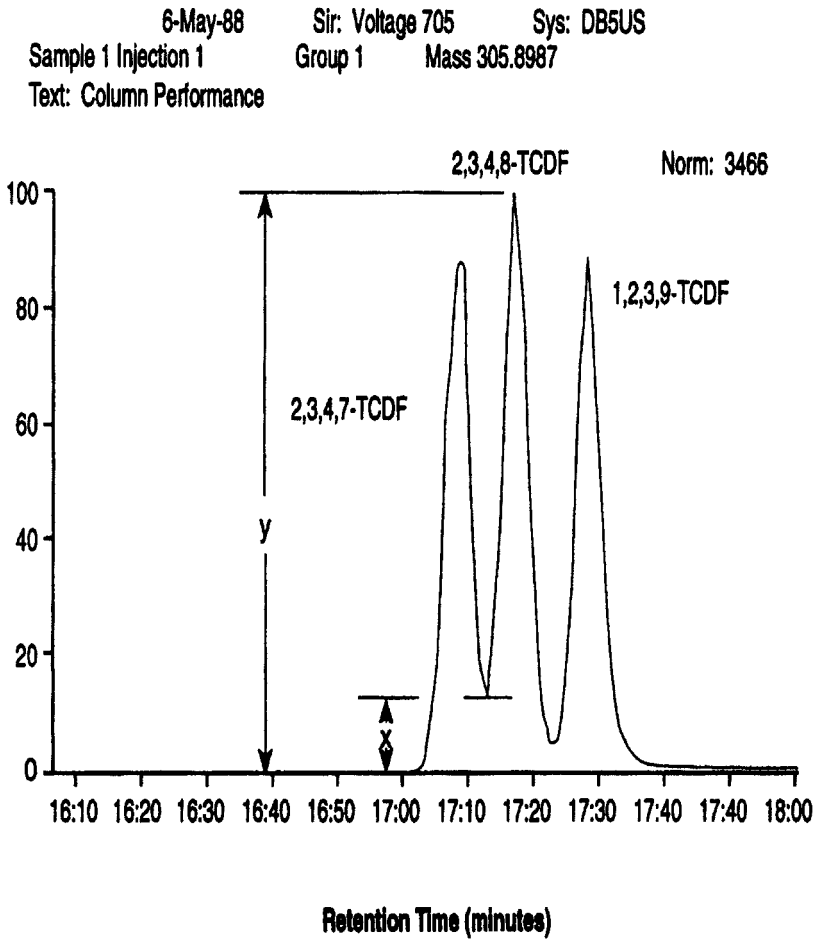

Figure 7. Isomer-Specific Separation of 2,3,7,8-TCDF on DB-5 Column

52-027-4A

BILLING CODE 6560–50–C

24.0 Glossary of Definitions and Purposes

These definitions and purposes are specific to this method but have been conformed to common usage as much as possible.

24.1 Units of weight and Measure and Their Abbreviations.

24.1.1 Symbols:

°C—degrees Celsius
µL—microliter
µm—micrometer
<—less than
>—greater than
%—percent

24.1.2 Alphabetical abbreviations:

amp—ampere
cm—centimeter
g—gram
h—hour
ID—inside diameter
in.—inch
L—liter
M—Molecular ion
m—meter
mg—milligram
min—minute
mL—milliliter
mm—millimeter
m/z—mass-to-charge ratio
N—normal; gram molecular weight of solute divided by hydrogen equivalent of solute, per liter of solution
OD—outside diameter
pg—picogram
ppb—part-per-billion
ppm—part-per-million
ppq—part-per-quadrillion
ppt—part-per-trillion
psig—pounds-per-square inch gauge
v/v—volume per unit volume
w/v—weight per unit volume

24.2 Definitions and Acronyms (in Alphabetical Order).

Analyte—A CDD or CDF tested for by this method. The analytes are listed in Table 1.

Calibration Standard (CAL)—A solution prepared from a secondary standard and/or stock solutions and used to calibrate the response of the instrument with respect to analyte concentration.

Calibration Verification Standard (VER)—The mid-point calibration standard (CS3) that is used in to verify calibration. See Table 4.

CDD—Chlorinated Dibenzo-p-ioxin—The isomers and congeners of tetra- through octa-chlorodibenzo-p-dioxin.

CDF—Chlorinated Dibenzofuran—The isomers and congeners of tetra- through octa-chlorodibenzofuran.

CS1, CS2, CS3, CS4, CS5—See Calibration standards and Table 4.

Field Blank—An aliquot of reagent water or other reference matrix that is placed in a sample container in the laboratory or the field, and treated as a sample in all respects, including exposure to sampling site conditions, storage, preservation, and all analytical procedures. The purpose of the field blank is to determine if the field or sample transporting procedures and environments have contaminated the sample.

GC—Gas chromatograph or gas chromatography.

GPC—Gel permeation chromatograph or gel permeation chromatography.

HPLC—High performance liquid chromatograph or high performance liquid chromatography.

HRGC—High resolution GC.

HRMS—High resolution MS.

IPR—Initial precision and recovery; four aliquots of the diluted PAR standard analyzed to establish the ability to generate acceptable precision and accuracy. An IPR is performed prior to the first time this method is used and any time the method or instrumentation is modified.

K–D—Kuderna-Danish concentrator; a device used to concentrate the analytes in a solvent.

Laboratory Blank—See method blank.

Laboratory Control sample (LCS)—See ongoing precision and recovery standard (OPR).

Laboratory Reagent Blank—See method blank.

May—This action, activity, or procedural step is neither required nor prohibited.

May Not—This action, activity, or procedural step is prohibited.

Method Blank—An aliquot of reagent water that is treated exactly as a sample including exposure to all glassware, equipment, solvents, reagents, internal standards, and surrogates that are used with samples. The method blank is used to determine if analytes or interferences are present in the laboratory environment, the reagents, or the apparatus.

Minimum Level (ML)—The level at which the entire analytical system must give a recognizable signal and acceptable calibration point for the analyte. It is equivalent to the concentration of the lowest calibration standard, assuming that all method-specified sample weights, volumes, and cleanup procedures have been employed.

MS—Mass spectrometer or mass spectrometry.

Must—This action, activity, or procedural step is required.

OPR—Ongoing precision and recovery standard (OPR); a laboratory blank spiked with known quantities of analytes. The OPR is analyzed exactly like a sample. Its purpose is to assure that the results produced by the laboratory remain within the limits specified in this method for precision and recovery.

PAR—Precision and recovery standard; secondary standard that is diluted and spiked to form the IPR and OPR.

PFK—Perfluorokerosene; the mixture of compounds used to calibrate the exact m/z scale in the HRMS.

Preparation Blank—See method blank.

Primary Dilution Standard—A solution containing the specified analytes that is purchased or prepared from stock solutions and diluted as needed to prepare calibration solutions and other solutions.

Quality Control Check Sample (QCS)—A sample containing all or a subset of the analytes at known concentrations. The QCS is obtained from a source external to the laboratory or is prepared from a source of standards different from the source of calibration standards. It is used to check laboratory performance with test materials prepared external to the normal preparation process.

Reagent Water—Water demonstrated to be free from the analytes of interest and potentially interfering substances at the method detection limit for the analyte.

Relative Standard Deviation (RSD)—The standard deviation times 100 divided by the mean. Also termed ''coefficient of variation.''

RF—Response factor. See Section 10.6.1.

RR—Relative response. See Section 10.5.2.

RSD—See relative standard deviation.

SDS—Soxhlet/Dean-Stark extractor; an extraction device applied to the extraction of solid and semi-solid materials (Reference 7).

Should—This action, activity, or procedural step is suggested but not required.

SICP—Selected ion current profile; the line described by the signal at an exact m/z.

SPE—Solid-phase extraction; an extraction technique in which an analyte is extracted from an aqueous sample by passage over or through a material capable of reversibly adsorbing the analyte. Also termed liquid-solid extraction.

Stock Solution—A solution containing an analyte that is prepared using a reference material traceable to EPA, the National Institute of Science and Technology (NIST), or a source that will attest to the purity and authenticity of the reference material.

TCDD—Tetrachlorodibenzo-p-dioxin.

TCDF—Tetrachlorodibenzofuran.

VER—See calibration verification standard.

[FR Doc. 97–23841 Filed 9–12–97; 8:45 am]

BILLING CODE 6560–50–P

federal register

Monday
September 15, 1997

Part IV

The President

Executive Order 13061—Federal Support of Community Efforts Along American Heritage Rivers

Federal Register
Vol. 62, No. 178
Monday, September 15, 1997

Presidential Documents

Title 3—

The President

Executive Order 13061 of September 11, 1997

Federal Support of Community Efforts Along American Heritage Rivers

By the authority vested in me as President by the Constitution and the laws of the United States of America, including the National Environmental Policy Act of 1969 (Public Law 91–190), and in order to protect and restore rivers and their adjacent communities, it is hereby ordered as follows:

Section 1. *Policies.*

(a) The American Heritage Rivers initiative has three objectives: natural resource and environmental protection, economic revitalization, and historic and cultural preservation.

(b) Executive agencies (''agencies''), to the extent permitted by law and consistent with their missions and resources, shall coordinate Federal plans, functions, programs, and resources to preserve, protect, and restore rivers and their associated resources important to our history, culture, and natural heritage.

(c) Agencies shall develop plans to bring increased efficiencies to existing and authorized programs with goals that are supportive of protection and restoration of communities along rivers.

(d) In accordance with Executive Order 12630, agencies shall act with due regard for the protection of private property provided for by the Fifth Amendment to the United States Constitution. No new regulatory authority is created as a result of the American Heritage Rivers initiative. This initiative will not interfere with matters of State, local, and tribal government jurisdiction.

(e) In furtherance of these policies, the President will designate rivers that meet certain criteria as ''American Heritage Rivers.''

(f) It is the policy of the Federal Government that communities shall nominate rivers as American Heritage Rivers and the Federal role will be solely to support community-based efforts to preserve, protect, and restore these rivers and their communities.

(g) Agencies should, to the extent practicable, help identify resources in the private and nonprofit sectors to aid revitalization efforts.

(h) Agencies are encouraged, to the extent permitted by law, to develop partnerships with State, local, and tribal governments and community and nongovernmental organizations. Agencies will be responsive to the diverse needs of different kinds of communities from the core of our cities to remote rural areas and shall seek to ensure that the role played by the Federal Government is complementary to the plans and work being carried out by State, local, and tribal governments. To the extent possible, Federal resources will be strategically directed to complement resources being spent by these governments.

(i) Agencies shall establish a method for field offices to assess the success of the American Heritage River initiative and provide a means to recommend changes that will improve the delivery and accessibility of Federal services and programs. Agencies are directed, where appropriate, to reduce and make more flexible procedural requirements and paperwork related to providing assistance to communities along designated rivers.

(j) Agencies shall commit to a policy under which they will seek to ensure that their actions have a positive effect on the natural, historic, economic, and cultural resources of American Heritage River communities. The policy will require agencies to consult with American Heritage River communities early in the planning stages of Federal actions, take into account the communities' goals and objectives and ensure that actions are compatible with the overall character of these communities. Agencies shall seek to ensure that their help for one community does not adversely affect neighboring communities. Additionally, agencies are encouraged to develop formal and informal partnerships to assist communities. Local Federal facilities, to the extent permitted by law and consistent with the agencies' missions and resources, should provide public access, physical space, technical assistance, and other support for American Heritage River communities.

(k) In addition to providing support to designated rivers, agencies will work together to provide information and services to all communities seeking support.

Sec. 2. *Process for Nominating an American Heritage River.*

(a) *Nomination.* Communities, in coordination with their State, local, or tribal governments, can nominate their river, river stretch, or river confluence for designation as an American Heritage River. When several communities are involved in the nomination of the same river, nominations will detail the coordination among the interested communities and the role each will play in the process. Individuals living outside the community may not nominate a river.

(b) *Selection Criteria.* Nominations will be judged based on the following:

(1) the characteristics of the natural, economic, agricultural, scenic, historic, cultural, or recreational resources of the river that render it distinctive or unique;

(2) the effectiveness with which the community has defined its plan of action and the extent to which the plan addresses, either through planned actions or past accomplishments, all three American Heritage Rivers objectives, which are set forth in section 1(a) of this order;

(3) the strength and diversity of community support for the nomination as evidenced by letters from elected officials; landowners; private citizens; businesses; and especially State, local, and tribal governments. Broad community support is essential to receiving the American Heritage River designation; and

(4) willingness and capability of the community to forge partnerships and agreements to implement their plan to meet their goals and objectives.

(c) *Recommendation Process.*

The Chair of the Council on Environmental Quality (''CEQ'') shall develop a fair and objective procedure to obtain the views of a diverse group of experts for the purpose of making recommendations to the President as to which rivers shall be designated. These experts shall reflect a variety of viewpoints, such as those representing natural, cultural, and historic resources; scenic, environmental, and recreation interests; tourism, transportation, and economic development interests; and industries such as agriculture, hydropower, manufacturing, mining, and forest management. The Chair of the CEQ will ensure that the rivers recommended represent a variety of stream sizes, diverse geographical locations, and a wide range of settings from urban to rural and ensure that relatively pristine, successful revitalization efforts are considered as well as degraded rivers in need of restoration.

(d) *Designation.*

(1) The President will designate certain rivers as American Heritage Rivers. Based on the receipt of a sufficient number of qualified nominations, ten rivers will be designated in the first phase of the initiative.

(2) The Interagency Committee provided for in section 3 of this order shall develop a process by which any community that nominates and has its river designated may have this designation terminated at its request.

(3) Upon a determination by the Chair of the CEQ that a community has failed to implement its plan, the Chair may recommend to the President that a designation be revoked. The Chair shall notify the community at least 30 days prior to making such a recommendation to the President. Based on that recommendation, the President may revoke the designation.

Sec. 3. *Establishment of an Interagency Committee.* There is hereby established the American Heritage Rivers Interagency Committee (''Committee''). The Committee shall have two co-chairs. The Chair of the CEQ shall be a permanent co-chair. The other co-chair will rotate among the heads of the agencies listed below.

(a) The Committee shall be composed of the following members or their designees at the Assistant Secretary level or equivalent:

(1) The Secretary of Defense;

(2) The Attorney General;

(3) The Secretary of the Interior;

(4) The Secretary of Agriculture;

(5) The Secretary of Commerce;

(6) The Secretary of Housing and Urban Development;

(7) The Secretary of Transportation;

(8) The Secretary of Energy;

(9) The Administrator of the Environmental Protection Agency;

(10) The Chair of the Advisory Council on Historic Preservation;

(11) The Chairperson of the National Endowment for the Arts; and

(12) The Chairperson of the National Endowment for the Humanities.

The Chair of the CEQ may invite to participate in meetings of the Committee, representatives of other agencies, as appropriate.

(b) The Committee shall:

(1) establish formal guidelines for designation as an American Heritage River;

(2) periodically review the actions of agencies in support of the American Heritage Rivers;

(3) report to the President on the progress, accomplishments, and effectiveness of the American Heritage Rivers initiative; and

(4) perform other duties as directed by the Chair of the CEQ.

Sec. 4. *Responsibilities of the Federal Agencies.* Consistent with Title I of the National Environmental Policy Act of 1969, agencies shall:

(a) identify their existing programs and plans that give them the authority to offer assistance to communities involved in river conservation and community health and revitalization;

(b) to the extent practicable and permitted by law and regulation, refocus programs, grants, and technical assistance to provide support for communities adjacent to American Heritage Rivers;

(c) identify all technical tools, including those developed for purposes other than river conservation, that can be applied to river protection, restoration, and community revitalization;

(d) provide access to existing scientific data and information to the extent permitted by law and consistent with the agencies mission and resources;

(e) cooperate with State, local, and tribal governments and communities with respect to their activities that take place in, or affect the area around, an American Heritage River;

(f) commit to a policy, as set forth in section 1(j) of this order, in making decisions affecting the quality of an American Heritage River;

(g) select from among all the agencies a single individual called the ''River Navigator,'' for each river that is designated an American Heritage River, with whom the communities can communicate goals and needs and who will facilitate community-agency interchange;

(h) allow public access to the river, for agencies with facilities along American Heritage Rivers, to the extent practicable and consistent with their mission; and

(i) cooperate, as appropriate, with communities on projects that protect or preserve stretches of the river that are on Federal property or adjacent to a Federal facility.

Sec. 5. *Responsibilities of the Committee and the Council on Environmental Quality.* The CEQ shall serve as Executive agent for the Committee, and the CEQ and the Committee shall ensure the implementation of the policies and purposes of this initiative.

Sec. 6. *Definition.* For the purposes of this order, Executive agency means any agency on the Committee and such other agency as may be designated by the President.

Sec. 7. *Judicial Review.* This order does not create any right or benefit, substantive or procedural, enforceable by any party against the United States, its agencies or instrumentalities, its officers or employees, or any other person.

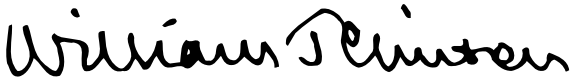

THE WHITE HOUSE,
September 11, 1997.

[FR Doc. 97–24591
Filed 9–12–97; 8:45 am]
Billing code 3195–01–P

Reader Aids

Federal Register

Vol. 62, No. 178

Monday, September 15, 1997

CUSTOMER SERVICE AND INFORMATION

Federal Register/Code of Federal Regulations

General Information, indexes and other finding aids **202–523–5227**

E-mail **info@fedreg.nara.gov**

Laws

For additional information **523–5227**

Presidential Documents

Executive orders and proclamations **523–5227**

The United States Government Manual **523–5227**

Other Services

Electronic and on-line services (voice) **523–4534**

Privacy Act Compilation **523–3187**

TDD for the hearing impaired **523–5229**

ELECTRONIC BULLETIN BOARD

Free **Electronic Bulletin Board** service for Public Law numbers, Federal Register finding aids, and list of documents on public inspection. **202–275–0920**

PUBLIC LAWS ELECTRONIC NOTIFICATION SERVICE

Free electronic mail notification of newly enacted Public Law is now available. To subscribe, send E-mail to **PENS@GPO.GOV** with the message: *SUBSCRIBE PENS-L FIRSTNAME LASTNAME.*

FAX-ON-DEMAND

You may access our Fax-On-Demand service with a fax machine. There is no charge for the service except for long distance telephone charges the user may incur. The list of documents on public inspection and the daily Federal Register's table of contents are available. The document numbers are 7050-Public Inspection list and 7051-Table of Contents list. The public inspection list is updated immediately for documents filed on an emergency basis.

NOTE: YOU WILL ONLY GET A LISTING OF DOCUMENTS ON FILE. Documents on public inspection may be viewed and copied in our office located at 800 North Capitol Street, NW., Suite 700. The Fax-On-Demand telephone number is: **301–713–6905**

FEDERAL REGISTER PAGES AND DATES, SEPTEMBER

46175–46430 2
46431–46664 3
46665–46866 4
46867–47136 5
47137–47358 8
47359–47550 9
47551–47744 10
47745–47912 11
47913–48164 12
48165–48448 15

CFR PARTS AFFECTED DURING SEPTEMBER

At the end of each month, the Office of the Federal Register publishes separately a List of CFR Sections Affected (LSA), which lists parts and sections affected by documents published since the revision date of each title.

3 CFR

Proclamations:
7018 47911

Executive Orders:
13061 48345

Memorandums:
Presidential Determination No. 97–31 of August 16, 1997 47907

5 CFR

338 46553
2423 46175
2429 46175

Proposed Rules:
532 46221

7 CFR

301 .....47551, 47553
441 47745
457 47745
500 46431
905 47913
1011 .....46665, 47923
1205 46412
1207 46175
1610 46867
1735 46867
1737 46867
1739 46867
1746 46867

Proposed Rules:
Ch. XIII 47156
319 47770
400 47772
1962 47384
1965 47384
1980 47384

8 CFR

214 48138
235 47749
274a 46553

Proposed Rules:
3 48183
236 48183

9 CFR

77 48165
94 46179
96 46179

Proposed Rules:
319 46450

10 CFR

19 48165
50 47268
207 46181
218 46181
430 .....46181, 47536
490 46181
501 46181
601 46181
820 46181
1013 46181
1017 46181
1050 46181

Proposed Rules:
9 46922
50 .....47268, 47588

12 CFR

25 47728
208 47728
210 48166
211 47728
369 47728
936 46872

Proposed Rules:
303 47969
337 47969
362 .....47969, 48025

14 CFR

11 46864
13 46864
15 46864
39 .....46184, 46186, 46189, 47359, 47360, 47362, 47364, 47753, 47754, 47927, 47930, 47931, 47933
71 .....46873, 46874, 47366, 47756, 47757, 47758, 47759
121 48135
125 48135
135 48135
185 46864

Proposed Rules:
39 .....46221, 48187, 48189
71 .....47776, 47777, 47778, 47779, 47780, 47781, 48025
107 48190
108 48190
139 48190
255 47606

15 CFR

922 47137

Proposed Rules:
280 47240
911 47388
922 47611

16 CFR

1000 46666
1014 46666
1015 46192
1021 46666
1051 46666
1115 46666
1211 46666
1402 46666

1406 46666
1500 46666
1502 46666
1700 46666
1702 46666

17 CFR

200 47367
202 47934
230 47934
232 47934
239 47934
270 47934
274 47934
Proposed Rules:
1 47612
30 47612
33 47612
190 47612

19 CFR

7 46433
10 ....46433, 46553
148 46433
178 46433
Proposed Rules:
351 46451

20 CFR

222 47137
229 47137
Proposed Rules:
404 46682

21 CFR

10 47760
20 47760
25 47760
50 46198
56 46198
71 47760
101 47760
170 47760
171 47760
312 ....46198, 46875, 47760
314 ....46198, 47760
511 47760
514 47760
520 46668
558 46443
570 47760
571 47760
601 ....46198, 47760
610 48174
812 ....46198, 47760
814 ....46198, 47760
Proposed Rules:
310 ....46223, 47532
334 46223
884 46686

22 CFR

41 48149
514 46876

24 CFR

Ch. V 47284
Proposed Rules:
968 47740
1000 47783
1003 47783
1005 47783

25 CFR

Proposed Rules:
502 46227

26 CFR

1 ....46876, 46877

28 CFR

Proposed Rules:
540 47894

29 CFR

1910 48175
4044 48176
Proposed Rules:
2560 47262

30 CFR

914 47138
Proposed Rules:
100 47330
773 47617
870 47617
917 46933
934 46695

31 CFR

Ch. V 48177
103 47141
344 46443
357 46860
Proposed Rules:
103 47156
212 46428

32 CFR

199 46877
311 46445
706 47944

33 CFR

100 ....46553, 46669
117 ....46879, 46880
151 46446
165 ....46670, 46671
Proposed Rules:
117 46697
334 47166

35 CFR

104 48178

36 CFR

Proposed Rules:
292 47167

38 CFR

1 47532
3 47532
9 47532

39 CFR

20 47558
Proposed Rules:
20 47394
111 ....47178, 48191

40 CFR

9 47114
32 47149
52 ....46199, 46202, 46208, 46446, 46880, 47369, 47760, 47946
55 46406
60 48348
81 46208
86 47114
136 48394
180 ....46882, 46885, 46888, 46894, 46900, 47560, 47561
185 47561
186 ....46900, 47561
271 47947
300 46211
Proposed Rules:
9 46937
52 ....46228, 46229, 46451, 46938, 47399, 47784, 48026, 48027, 48033
60 46453
63 46804
70 46451
79 47400
81 ....46229, 46234, 46238
86 46937
170 47544
260 47401
261 ....47401, 47402
273 47401
300 ....46938, 47619, 47784

41 CFR

Proposed Rules:
101–1 47179
101–46 47179

42 CFR

416 47237
440 47896
Proposed Rules:
416 46698
1000 47182
1001 ....47182, 47195
1002 47182
1005 47182

43 CFR

1810 47568

44 CFR

65 47954
67 47955
Proposed Rules:
67 48193

46 CFR

28 46672
298 47149

47 CFR

1 47960
2 47960
26 47960
54 47369
64 ....46447, 47152, 47237, 47369
68 47371
69 47369
73 ....47371, 47762, 47763
90 46211
97 ....47960, 47961
Proposed Rules:
1 ....46241, 48034
54 ....47404, 48042
64 47404
69 48042
73 ....46707, 46708, 47406, 47786, 47787
76 46453
80 46243
90 46468

48 CFR

204 48181
212 47153
225 47153
231 47154
244 47153
252 47153
253 48181
704 47532
715 47532
726 47532
750 47532
752 47532
1602 47569
1603 47569
1604 47569
1615 47569
1616 47569
1629 47569
1631 47569
1643 47569
1644 47569
1645 47569
1649 47569
1652 47569
1653 47569
Proposed Rules:
46 47882
204 48200
212 ....47407, 48200
215 48205
225 47407
252 ....47407, 48200
833 47411
852 47411

49 CFR

172 46214
174 46214
175 46214
176 46214
177 46214
571 46907
575 46447
580 47763
1002 46217
1108 46217
1121 47583
1150 47583
1206 46919
Proposed Rules:
571 47414

50 CFR

20 46420
25 47372
32 47372
600 47584
622 ....46677, 46679, 47765, 47766
648 47767
660 ....46920, 47587
679 ....46680, 46681, 47768
Proposed Rules:
17 ....46709, 46710, 48206
20 46801
630 47416
648 ....46470, 48047, 48207

REMINDERS

The items in this list were editorially compiled as an aid to Federal Register users. Inclusion or exclusion from this list has no legal significance.

RULES GOING INTO EFFECT SEPTEMBER 15, 1997

AGRICULTURE DEPARTMENT

Agricultural Marketing Service

Perishable Agricultural Commodities Act:
- Retailers and grocery wholesalers; phase-out of license fee payments, etc.; published 8-14-97

ENVIRONMENTAL PROTECTION AGENCY

Air programs:
- Transportation conformity rule; flexibility and streamlining; published 8-15-97

Air quality implementation plans; approval and promulgation; various States:
- Delaware; published 7-15-97
- Mississippi; published 7-15-97
- Missouri; published 8-15-97

Air quality implementation plans; √A√approval and promulgation; various States; air quality planning purposes; designation of areas:
- Utah; published 7-17-97

FEDERAL COMMUNICATIONS COMMISSION

Common carrier services:
- Hearing aid compatible wireline telephones in workplaces, confined settings, etc.; published 8-14-97

Practice and procedure:
- Regulatory fees (FY 1997); assessment and collection; published 7-11-97

Radio stations; table of assignments:
- Louisiana; published 8-6-97
- New Mexico; published 8-12-97
- Texas; published 8-6-97

FEDERAL RESERVE SYSTEM

Electronic fund transfers (Regulation E);
- Electronic benefit transfer programs; exemption; published 8-14-97

HEALTH AND HUMAN SERVICES DEPARTMENT

Food and Drug Administration

Biological products:
- United States Pharmacopeia (1995 edition); membrane filtration test procedures reference update; published 9-15-97

HEALTH AND HUMAN SERVICES DEPARTMENT

Health Care Financing Administration

Medicare:
- End-stage renal disease—
  - Payment exception requests and organ procurement costs; published 8-15-97

LABOR DEPARTMENT

Occupational Safety and Health Administration

Safety and health standards, etc.:
- Methylene chloride; occupational exposure—
  - Start-up date extension; published 9-15-97

NUCLEAR REGULATORY COMMISSION

Notices, instructions and reports to workers, etc.:
- Notice to employees (NRC Form 3, August 1997); posting requirements; published 9-15-97

TRANSPORTATION DEPARTMENT

Federal Aviation Administration

Airworthiness directives:
- Bombardier; published 9-9-97

COMMENTS DUE NEXT WEEK

AGRICULTURE DEPARTMENT

Agricultural Marketing Service

Cherries (tart) grown in—
- Michigan et al.; comments due by 9-24-97; published 8-25-97

Kiwifruit grown in—
- California; comments due by 9-25-97; published 8-26-97

Oranges, grapefruit, tangerines, and tangelos grown in Florida; comments due by 9-22-97; published 9-12-97

Pears (Bartlett) grown in Oregon et al.; comments due by 9-24-97; published 8-25-97

AGRICULTURE DEPARTMENT

Federal Crop Insurance Corporation

Crop insurance regulations:
- Stonefruit; comments due by 9-22-97; published 7-22-97

COMMERCE DEPARTMENT

National Oceanic and Atmospheric Administration

Fishery conservation and management:
- West Coast States and Western Pacific fisheries—
  - Sablefish; comments due by 9-22-97; published 9-5-97

DEFENSE DEPARTMENT

Civilian health and medical program of uniformed services (CHAMPUS):
- Active duty dependents dental plan; extension to overseas areas; comments due by 9-23-97; published 7-25-97

Vietnam, Democratic Republic (North Vietnam); compensation of former incarcerated operatives; comments due by 9-23-97; published 7-25-97

ENVIRONMENTAL PROTECTION AGENCY

Air pollutants, hazardous; national emission standards:
- Synthetic √1√organic chemical manufacturing industry and other processes subject to equipment leaks negotiated regulation
  - Correction; comments due by 9-22-97; published 8-22-97
- Synthetic √2√organic chemical manufacturing industry; chemical production processes list; additions and deletions; comments due by 9-22-97; published 8-22-97

Air pollution control; new motor vehicles and engines:
- National low emission vehicle program; voluntary standards; State commitments; comments due by 9-22-97; published 8-22-97

Air pollution; standards of performance for new stationary sources:
- Municipal waste combustors—
  - Standards and emission guidelines; comments due by 9-24-97; published 8-25-97
  - Standards and emission guidelines; comments due by 9-24-97; published 8-25-97
  - Standards and emission guidelines; comments due by 9-24-97; published 8-25-97
  - Standards and emission guidelines; comments due by 9-24-97; published 8-25-97

Air quality implementation plans:
- Preparation, adoption, and submittal—
  - Volatile organic compounds definition; methyl acetate exclusion; comments due by 9-24-97; published 8-25-97

Air quality implementation plans; approval and promulgation; various States:
- California; comments due by 9-24-97; published 8-25-97
- Ohio; comments due by 9-24-97; published 8-25-97
- Pennsylvania; comments due by 9-22-97; published 8-21-97

Air quality implementation plans; √A√approval and promulgation; various States; air quality planning purposes; designation of areas:
- Indiana; comments due by 9-25-97; published 8-26-97

Clean Water Act:
- Pharmaceutical manufacturing—
  - Effluent limitations guidelines, pretreatment standards, and new source performance standards; comments due by 9-22-97; published 8-8-97

Solid waste:
- Hazardous waste combustors, etc.; maximum achievable control technologies performance standards; comments due by 9-24-97; published 9-9-97

Superfund program:
- National oil and hazardous substances contingency plan—
  - National priorities list update; comments due by 9-22-97; published 8-22-97

Water pollution control:
- Water quality standards—
  - California; priority toxic pollutants; numeric

criteria; comments due by 9-26-97; published 8-5-97

FEDERAL COMMUNICATIONS COMMISSION

Common carrier services:

Access charges—

Subscriber line charges, etc.; price cap rules; primary lines definition; comments due by 9-25-97; published 9-12-97

Communications equipment:

Radio frequency devices—

Unlicensed services operation; spectrum etiquette; use of 59-64 GHz band; comments due by 9-26-97; published 8-27-97

Radio broadcasting:

Pole attachments; comments due by 9-26-97; published 8-18-97

Radio stations; table of assignments:

Missouri; comments due by 9-22-97; published 8-6-97

Wisconsin; comments due by 9-22-97; published 8-6-97

Television broadcasting:

Cable television systems—

Telecommunications services inside wiring; cable home wiring disposition; comments due by 9-25-97; published 9-3-97

Television stations; table of assignments:

California; comments due by 9-22-97; published 8-6-97

FEDERAL RESERVE SYSTEM

Freedom of Information Act; implementation

Federal Open Market Committee; information availability; comments due by 9-25-97; published 8-26-97

HEALTH AND HUMAN SERVICES DEPARTMENT

Children and Families Administration

Child care and development fund; comments due by 9-22-97; published 7-23-97

HEALTH AND HUMAN SERVICES DEPARTMENT

Food and Drug Administration

Food for human consumption:

Food labeling—

Dietary sugar alcohols and dental caries; health claims; comments due by 9-22-97; published 7-9-97

Medical devices:

Premarket approval applications, approval and denial; procedures revision; comments due by 9-25-97; published 6-27-97

INTERIOR DEPARTMENT

Fish and Wildlife Service

Endangered and threatened species:

Findings on petitions, etc.—

Stone Mountain fairy shrimp; comments due by 9-22-97; published 7-22-97

Hawaiian ferns (four species); comments due by 9-22-97; published 7-22-97

Illinois cave amphipod; comments due by 9-26-97; published 7-28-97

Keck's checker mallow; comments due by 9-26-97; published 7-28-97

National wildlife refuge system:

Midway Islands and Midway Atoll National Wildlife Refuge; administration; comments due by 9-26-97; published 8-27-97

INTERIOR DEPARTMENT

Minerals Management Service

Royalty management:

Federal leases; natural gas valuation regulations; amendments; withdrawn; supplemental information comment request; comments due by 9-22-97; published 7-18-97

INTERIOR DEPARTMENT

National Park Service

National Park System:

Safety belts; required use by all motor vehicle occupants; comments due by 9-26-97; published 7-28-97

INTERIOR DEPARTMENT

Surface Mining Reclamation and Enforcement Office

Permanent program and abandoned mine land reclamation plan submissions:

Virginia; comments due by 9-24-97; published 8-25-97

JUSTICE DEPARTMENT

Immigration and Naturalization Service

Immigration:

Permanent residence status eligibility restrictions; temporary removal; comments due by 9-22-97; published 7-23-97

JUSTICE DEPARTMENT

Freedom of Information Act and Privacy Act; implementation; comments due by 9-25-97; published 8-26-97

LABOR DEPARTMENT

Privacy Act; implementation; comments due by 9-23-97; published 7-28-97

LABOR DEPARTMENT

Workers' Compensation Programs Office

Federal Employees Compensation Act:

File material claims; use and disclosure; comments due by 9-23-97; published 7-28-97

POSTAL SERVICE

Domestic Mail Manual:

Commercial mail receiving agency; delivery of mail; procedure clarification; comments due by 9-26-97; published 8-27-97

International Mail Manual:

Global package link (GPL) service—

Mexico and Singapore; comments due by 9-25-97; published 8-26-97

TRANSPORTATION DEPARTMENT

Coast Guard

Offshore supply vessels; comments due by 9-23-97; published 7-25-97

Regattas and marine parades:

Miller Lite Offshore Challenge Boat Race at Islamorada, FL; comments due by 9-25-97; published 8-26-97

TRANSPORTATION DEPARTMENT

Federal Aviation Administration

Airworthiness directives:

Avco Lycoming et al.; comments due by 9-26-97; published 7-28-97

Ayres Corp.; comments due by 9-26-97; published 7-10-97

British Aerospace; comments due by 9-26-97; published 7-28-97

Cessna Aircraft Co.; comments due by 9-26-97; published 7-23-97

Fokker; comments due by 9-22-97; published 8-11-97

Israel Aircraft Industries; comments due by 9-22-97; published 8-11-97

McDonnell Douglas; comments due by 9-22-97; published 8-11-97

New Piper Aircraft, Inc.; comments due by 9-22-97; published 7-24-97

Raytheon; comments due by 9-23-97; published 7-30-97

Class B airspace; comments due by 9-22-97; published 8-22-97

Class E airspace; comments due by 9-22-97; published 8-22-97

TREASURY DEPARTMENT

Alcohol, Tobacco and Firearms Bureau

Alcohol; viticultural area designations:

Yorkville Highlands, Mendocino County, CA; comments due by 9-23-97; published 7-25-97

TREASURY DEPARTMENT

Thrift Supervision Office

Fiduciary powers of Federal savings associations; revision; and Community Reinvestment Act regulations; exempt savings associations; comments due by 9-22-97; published 7-23-97

VETERANS AFFAIRS DEPARTMENT

Medical benefits:

Non-VA physician services; outpatient or inpatient care provided at non-VA facilities; payment; comments due by 9-22-97; published 7-22-97

LIST OF PUBLIC LAWS

Note: No public bills which have become law were received by the Office of the Federal Register for inclusion in today's **List of Public Laws**

Last List August 19, 1997

Public Laws Electronic Notification Service

Free electronic mail notification of newly enacted Public Laws is now available. To subscribe, send E-mail to **PENS@GPO.GOV** with the message:

SUBSCRIBE PENS-L FIRSTNAME LASTNAME.

CFR CHECKLIST

This checklist, prepared by the Office of the Federal Register, is published weekly. It is arranged in the order of CFR titles, stock numbers, prices, and revision dates.

An asterisk (*) precedes each entry that has been issued since last week and which is now available for sale at the Government Printing Office.

A "●" precedes each entry that is now available on-line through the Government Printing Office's *GPO Access* **service at http://www.access.gpo.gov/nara/cfr. For information about** *GPO Access* **call 1-888-293-6498 (toll free).**

A checklist of current CFR volumes comprising a complete CFR set, also appears in the latest issue of the LSA (List of CFR Sections Affected), which is revised monthly.

The annual rate for subscription to all revised volumes is $951.00 domestic, $237.75 additional for foreign mailing.

Mail orders to the Superintendent of Documents, Attn: New Orders, P.O. Box 371954, Pittsburgh, PA 15250–7954. All orders must be accompanied by remittance (check, money order, GPO Deposit Account, VISA, Master Card, or Discover). Charge orders may be telephoned to the GPO Order Desk, Monday through Friday, at **(202) 512–1800** from 8:00 a.m. to 4:00 p.m. eastern time, or FAX your charge orders to **(202) 512-2250**.

Title	Stock Number	Price	Revision Date
●**1, 2 (2** Reserved)	(869–032–00001–8)	$5.00	Feb. 1, 1997
●**3** (1996 Compilation and Parts 100 and 101)	(869–032–00002–6)	20.00	[1] Jan. 1, 1997
●**4**	(869–032–00003–4)	7.00	Jan. 1, 1997
5 Parts:			
●1–699	(869–032–0004–2)	34.00	Jan. 1, 1997
●700–1199	(869–032–00005–1)	26.00	Jan. 1, 1997
●1200–End, 6 (6 Reserved)	(869–032–00006–9)	33.00	Jan. 1, 1997
7 Parts:			
●0–26	(869–032–00007–7)	26.00	Jan. 1, 1997
●27–52	(869–032–00008–5)	30.00	Jan. 1, 1997
●53–209	(869–032–00009–3)	22.00	Jan. 1, 1997
●210–299	(869–032–00010–7)	44.00	Jan. 1, 1997
●300–399	(869–032–00011–5)	22.00	Jan. 1, 1997
●400–699	(869–032–00012–3)	28.00	Jan. 1, 1997
●700–899	(869–032–00013–1)	31.00	Jan. 1, 1997
●900–999	(869–032–00014–0)	40.00	Jan. 1, 1997
●1000–1199	(869–032–00015–8)	45.00	Jan. 1, 1997
●1200–1499	(869–032–00016–6)	33.00	Jan. 1, 1997
●1500–1899	(869–032–00017–4)	53.00	Jan. 1, 1997
●1900–1939	(869–032–00018–2)	19.00	Jan. 1, 1997
●1940–1949	(869–032–00019–1)	40.00	Jan. 1, 1997
●1950–1999	(869–032–00020–4)	42.00	Jan. 1, 1997
●2000–End	(869–032–00021–2)	20.00	Jan. 1, 1997
●**8**	(869–032–00022–1)	30.00	Jan. 1, 1997
9 Parts:			
●1–199	(869–032–00023–9)	39.00	Jan. 1, 1997
●200–End	(869–032–00024–7)	33.00	Jan. 1, 1997
10 Parts:			
●0–50	(869–032–00025–5)	39.00	Jan. 1, 1997
●51–199	(869–032–00026–3)	31.00	Jan. 1, 1997
●200–499	(869–032–00027–1)	30.00	Jan. 1, 1997
●500–End	(869–032–00028–0)	42.00	Jan. 1, 1997
●**11**	(869–032–00029–8)	20.00	Jan. 1, 1997
12 Parts:			
●1–199	(869–032–00030–1)	16.00	Jan. 1, 1997
●200–219	(869–032–00031–0)	20.00	Jan. 1, 1997
●220–299	(869–032–00032–8)	34.00	Jan. 1, 1997
●300–499	(869–032–00033–6)	27.00	Jan. 1, 1997
●500–599	(869–032–00034–4)	24.00	Jan. 1, 1997
●600–End	(869–032–00035–2)	40.00	Jan. 1, 1997
●**13**	(869–032–00036–1)	23.00	Jan. 1, 1997
14 Parts:			
●1–59	(869–032–00037–9)	44.00	Jan. 1, 1997
●60–139	(869–032–00038–7)	38.00	Jan. 1, 1997
140–199	(869–032–00039–5)	16.00	Jan. 1, 1997
●200–1199	(869–032–00040–9)	30.00	Jan. 1, 1997
●1200–End	(869–032–00041–7)	21.00	Jan. 1, 1997
15 Parts:			
0–299	(869–032–00042–5)	21.00	Jan. 1, 1997
300–799	(869–032–00043–3)	32.00	Jan. 1, 1997
●800–End	(869–032–00044–1)	22.00	Jan. 1, 1997
16 Parts:			
●0–999	(869–032–00045–0)	30.00	Jan. 1, 1997
●1000–End	(869–032–00046–8)	34.00	Jan. 1, 1997
17 Parts:			
●1–199	(869–032–00048–4)	21.00	Apr. 1, 1997
●200–239	(869–032–00049–2)	32.00	Apr. 1, 1997
●240–End	(869–032–00050–6)	40.00	Apr. 1, 1997
18 Parts:			
●1–399	(869–032–00051–4)	46.00	Apr. 1, 1997
●400–End	(869–032–00052–2)	14.00	Apr. 1, 1997
19 Parts:			
●1–140	(869–032–00053–1)	33.00	Apr. 1, 1997
●141–199	(869–032–00054–9)	30.00	Apr. 1, 1997
●200–End	(869–032–00055–7)	16.00	Apr. 1, 1997
20 Parts:			
●1–399	(869–032–00056–5)	26.00	Apr. 1, 1997
●400–499	(869–032–00057–3)	46.00	Apr. 1, 1997
●500–End	(869–032–00058–1)	42.00	Apr. 1, 1997
21 Parts:			
●1–99	(869–032–00059–0)	21.00	Apr. 1, 1997
●100–169	(869–032–00060–3)	27.00	Apr. 1, 1997
●170–199	(869–032–00061–1)	28.00	Apr. 1, 1997
●200–299	(869–032–00062–0)	9.00	Apr. 1, 1997
●300–499	(869–032–00063–8)	50.00	Apr. 1, 1997
500–599	(869–032–00064–6)	28.00	Apr. 1, 1997
●600–799	(869–032–00065–4)	9.00	Apr. 1, 1997
●800–1299	(869–032–00066–2)	31.00	Apr. 1, 1997
●1300–End	(869–032–00067–1)	13.00	Apr. 1, 1997
22 Parts:			
1–299	(869–032–00068–9)	42.00	Apr. 1, 1997
●300–End	(869–032–00069–7)	31.00	Apr. 1, 1997
●**23**	(869–032–00070–1)	26.00	Apr. 1, 1997
24 Parts:			
●0–199	(869–032–00071–9)	32.00	Apr. 1, 1997
200–499	(869–032–00072–7)	29.00	Apr. 1, 1997
500–699	(869–032–00073–5)	18.00	Apr. 1, 1997
●700–1699	(869–032–00074–3)	42.00	Apr.1, 1997
●1700–End	(869–032–00075–1)	18.00	Apr. 1, 1997
●**25**	(869–032–00076–0)	42.00	May 1, 1997
26 Parts:			
●§§ 1.0-1–1.60	(869–032–00077–8)	21.00	Apr. 1, 1997
●§§ 1.61–1.169	(869–032–00078–6)	44.00	Apr. 1, 1997
●§§ 1.170–1.300	(869–032–00079–4)	31.00	Apr. 1, 1997
●§§ 1.301–1.400	(869–032–00080–8)	22.00	Apr. 1, 1997
●§§ 1.401–1.440	(869–032–00081–6)	39.00	Apr. 1, 1997
●§§ 1.441-1.500	(869-032-00082-4)	22.00	Apr. 1, 1997
●§§ 1.501–1.640	(869–032–00083–2)	28.00	Apr. 1, 1997
●§§ 1.641–1.850	(869–032–00084–1)	33.00	Apr. 1, 1997
●§§ 1.851–1.907	(869–032–00085–9)	34.00	Apr. 1, 1997
●§§ 1.908–1.1000	(869–032–00086–7)	34.00	Apr. 1, 1997
●§§ 1.1001–1.1400	(869–032–00087–5)	35.00	Apr. 1, 1997
§§ 1.1401–End	(869–032–00088–3)	45.00	Apr. 1, 1997
2–29	(869–032–00089–1)	36.00	Apr. 1, 1997
30–39	(869–032–00090–5)	25.00	Apr. 1, 1997
40–49	(869–032–00091–3)	17.00	Apr. 1, 1997
50–299	(869–032–00092–1)	18.00	Apr. 1, 1997
300–499	(869–032–00093–0)	33.00	Apr. 1, 1997
500–599	(869–032–00094–8)	6.00	[4] Apr. 1, 1990
600–End	(869–032–00095–3)	9.50	Apr. 1, 1997
27 Parts:			
1–199	(869–032–00096–4)	48.00	Apr. 1, 1997

Title	Stock Number	Price	Revision Date
200–End	(869–032–00097–2)	17.00	Apr. 1, 1997
28 Parts:			
1-42	(869–028–00106–8)	35.00	July 1, 1996
43-end	(869-028-00107-6)	30.00	July 1, 1996
29 Parts:			
0–99	(869–032–00106–5)	27.00	July 1, 1997
100–499	(869–032–00101–4)	12.00	July 1, 1997
*500–899	(869–032–00102–2)	41.00	July 1, 1997
900–1899	(869–028–00111–4)	20.00	July 1, 1996
1900–1910 (§§ 1900 to 1910.999)	(869–028–00112–2)	43.00	July 1, 1996
1910 (§§ 1910.1000 to end)	(869–028–00113–1)	27.00	July 1, 1996
1911–1925	(869–032–00116–5)	19.00	July 1, 1997
1926	(869–028–00115–7)	30.00	July 1, 1996
1927–End	(869–028–00116–5)	38.00	July 1, 1996
30 Parts:			
1–199	(869–028–00117–3)	33.00	July 1, 1996
200–699	(869–028–00118–1)	26.00	July 1, 1996
700–End	(869–028–00119–0)	38.00	July 1, 1996
31 Parts:			
0–199	(869–032–00112–0)	20.00	July 1, 1997
200–End	(869–028–00121–1)	33.00	July 1, 1996
32 Parts:			
1–39, Vol. I		15.00	[2] July 1, 1984
1–39, Vol. II		19.00	[2] July 1, 1984
1–39, Vol. III		18.00	[2] July 1, 1984
1–190	(869–028–00122–0)	42.00	July 1, 1996
191–399	(869–028–00123–8)	50.00	July 1, 1996
400–629	(869–028–00124–6)	34.00	July 1, 1996
630–699	(869–028–00125–4)	14.00	[5] July 1, 1991
700–799	(869–028–00126–2)	28.00	July 1, 1996
800–End	(869–028–00127–1)	28.00	July 1, 1996
33 Parts:			
1–124	(869–028–00128–9)	26.00	July 1, 1996
125–199	(869–028–00129–7)	35.00	July 1, 1996
200–End	(869–028–00130–1)	32.00	July 1, 1996
34 Parts:			
1–299	(869–028–00131–9)	27.00	July 1, 1996
300–399	(869–028–00132–7)	27.00	July 1, 1996
400–End	(869–028–00133–5)	46.00	July 1, 1996
35	(869–028–00134–3)	15.00	July 1, 1996
36 Parts			
1–199	(869–028–00135–1)	20.00	July 1, 1996
200–End	(869–028–00136–0)	48.00	July 1, 1996
37	(869–028–00137–8)	24.00	July 1, 1996
38 Parts:			
0–17	(869–028–00138–6)	34.00	July 1, 1996
18–End	(869–028–00139–4)	38.00	July 1, 1996
39	(869–028–00140–8)	23.00	July 1, 1996
40 Parts:			
●1–51	(869–028–00141–6)	50.00	July 1, 1996
●52	(869–028–00142–4)	51.00	July 1, 1996
●53–59	(869–028–00143–2)	14.00	July 1, 1996
60	(869–028–00144–1)	47.00	July 1, 1996
61–62	(869–032–00140–5)	19.00	July 1, 1997
●61–71	(869–028–00145–9)	47.00	July 1, 1996
●72–80	(869–028–00146–7)	34.00	July 1, 1996
●81–85	(869–028–00147–5)	31.00	July 1, 1996
86	(869–028–00148–3)	46.00	July 1, 1996
●87-135	(869–028–00149–1)	35.00	July 1, 1996
●136–149	(869–028–00150–5)	35.00	July 1, 1996
●150–189	(869–028–00151–3)	33.00	July 1, 1996
●190–259	(869–028–00152–1)	22.00	July 1, 1996
●260–299	(869–028–00153–0)	53.00	July 1, 1996
●300–399	(869–028–00154–8)	28.00	July 1, 1996
●400–424	(869–032–00152–9)	33.00	[7] July 1, 1996
●425–699	(869–032–00153–7)	40.00	July 1, 1997
●700–789	(869–028–00157–2)	33.00	July 1, 1996
●790–End	(869–028–00158–7)	19.00	July 1, 1996
41 Chapters:			
1, 1–1 to 1–10		13.00	[3] July 1, 1984
1, 1–11 to Appendix, 2 (2 Reserved)		13.00	[3] July 1, 1984
3–6		14.00	[3] July 1, 1984
7		6.00	[3] July 1, 1984
8		4.50	[3] July 1, 1984
9		13.00	[3] July 1, 1984
10–17		9.50	[3] July 1, 1984
18, Vol. I, Parts 1–5		13.00	[3] July 1, 1984
18, Vol. II, Parts 6–19		13.00	[3] July 1, 1984
18, Vol. III, Parts 20–52		13.00	[3] July 1, 1984
19–100		13.00	[3] July 1, 1984
1–100	(869–028–00159–9)	12.00	July 1, 1996
101	(869–028–00160–2)	36.00	July 1, 1996
102–200	(869–028–00161–1)	17.00	July 1, 1996
201–End	(869–028–00162–9)	17.00	July 1, 1996
42 Parts:			
●1–399	(869–028–00163–7)	32.00	Oct. 1, 1996
●400–429	(869–028–00164–5)	34.00	Oct. 1, 1996
●430–End	(869–028–00165–3)	44.00	Oct. 1, 1996
43 Parts:			
●1–999	(869–028–00166–1)	30.00	Oct. 1, 1996
●1000–end	(869–028–00167–0)	45.00	Oct. 1, 1996
●44	(869–028–00168–8)	31.00	Oct. 1, 1996
45 Parts:			
●1–199	(869–028–00169–6)	28.00	Oct. 1, 1996
●200–499	(869–028–00170–0)	14.00	[6] Oct. 1, 1995
●500–1199	(869–028–00171–8)	30.00	Oct. 1, 1996
●1200–End	(869–028–00172–6)	36.00	Oct. 1, 1996
46 Parts:			
●1–40	(869–028–00173–4)	26.00	Oct. 1, 1996
●41–69	(869–028–00174–2)	21.00	Oct. 1, 1996
●70–89	(869–028–00175–1)	11.00	Oct. 1, 1996
●90–139	(869–028–00176–9)	26.00	Oct. 1, 1996
●140–155	(869–028–00177–7)	15.00	Oct. 1, 1996
●156–165	(869–028–00178–5)	20.00	Oct. 1, 1996
●166–199	(869–028–00179–3)	22.00	Oct. 1, 1996
●200–499	(869–028–00180–7)	21.00	Oct. 1, 1996
●500–End	(869–028–00181–5)	17.00	Oct. 1, 1996
47 Parts:			
●0–19	(869–028–00182–3)	35.00	Oct. 1, 1996
●20–39	(869–028–00183–1)	26.00	Oct. 1, 1996
●40–69	(869–028–00184–0)	18.00	Oct. 1, 1996
●70–79	(869–028–00185–8)	33.00	Oct. 1, 1996
●80–End	(869–028–00186–6)	39.00	Oct. 1, 1996
48 Chapters:			
●1 (Parts 1–51)	(869–028–00187–4)	45.00	Oct. 1, 1996
●1 (Parts 52–99)	(869–028–00188–2)	29.00	Oct. 1, 1996
●2 (Parts 201–251)	(869–028–00189–1)	22.00	Oct. 1, 1996
●2 (Parts 252–299)	(869–028–00190–4)	16.00	Oct. 1, 1996
●3–6	(869–028–00191–2)	30.00	Oct. 1, 1996
●7–14	(869–028–00192–1)	29.00	Oct. 1, 1996
●15–28	(869–028–00193–9)	38.00	Oct. 1, 1996
●29–End	(869–028–00194–7)	25.00	Oct. 1, 1996
49 Parts:			
●1–99	(869–028–00195–5)	32.00	Oct. 1, 1996
●100–185	(869–028–00196–3)	50.00	Oct. 1, 1996
●186–199	(869–028–00197–1)	14.00	Oct. 1, 1996
●200–399	(869–028–00198–0)	39.00	Oct. 1, 1996
●400–999	(869–028–00199–8)	49.00	Oct. 1, 1996
●1000–1199	(869–028–00200–5)	23.00	Oct. 1, 1996
●1200–End	(869–028–00201–3)	15.00	Oct. 1, 1996
50 Parts:			
●1–199	(869–028–00202–1)	34.00	Oct. 1, 1996
●200–599	(869–028–00203–0)	22.00	Oct. 1, 1996
●600–End	(869–028–00204–8)	26.00	Oct. 1, 1996
CFR Index and Findings Aids	(869–032–00047–6)	45.00	Jan. 1, 1997
Complete 1997 CFR set		951.00	1997

Title	Stock Number	Price	Revision Date
Microfiche CFR Edition:			
Subscription (mailed as issued)		247.00	1997
Individual copies		1.00	1997
Complete set (one-time mailing)		264.00	1996
Complete set (one-time mailing)		264.00	1995

[1] Because Title 3 is an annual compilation, this volume and all previous volumes should be retained as a permanent reference source.

[2] The July 1, 1985 edition of 32 CFR Parts 1–189 contains a note only for Parts 1–39 inclusive. For the full text of the Defense Acquisition Regulations in Parts 1–39, consult the three CFR volumes issued as of July 1, 1984, containing those parts.

[3] The July 1, 1985 edition of 41 CFR Chapters 1–100 contains a note only for Chapters 1 to 49 inclusive. For the full text of procurement regulations in Chapters 1 to 49, consult the eleven CFR volumes issued as of July 1, 1984 containing those chapters.

[4] No amendments to this volume were promulgated during the period Apr. 1, 1990 to Mar. 31, 1997. The CFR volume issued April 1, 1990, should be retained.

[5] No amendments to this volume were promulgated during the period July 1, 1991 to June 30, 1996. The CFR volume issued July 1, 1991, should be retained.

[6] No amendments were promulgated during the period October 1, 1995 to September 30, 1996. The CFR volume issued October 1, 1995 should be retained.

[7] No amendments to this volume were promulgated during the period July 1, 1996 to June 30, 1997. The volume issued July 1, 1996, should be retained.