5–13–97
Vol. 62 No. 92
Pages 26205–26380

federal register

Tuesday
May 13, 1997

Briefings on how to use the Federal Register
For information on briefings in Washington, DC, Long Beach and San Francisco, CA, and Anchorage, AK, see the announcements on the inside cover of this issue and in the Reader Aids.

Now Available Online

Code of Federal Regulations

via

GPO Access

(Selected Volumes)

Free, easy, online access to selected *Code of Federal Regulations (CFR)* volumes is now available via *GPO Access*, a service of the United States Government Printing Office (GPO). *CFR* titles will be added to *GPO Access* incrementally throughout calendar years 1996 and 1997 until a complete set is available. GPO is taking steps so that the online and printed versions of the *CFR* will be released concurrently.

The *CFR* and *Federal Register* on *GPO Access*, are the official online editions authorized by the Administrative Committee of the Federal Register.

New titles and/or volumes will be added to this online service as they become available.

http://www.access.gpo.gov/nara/cfr

For additional information on ***GPO Access*** products, services and access methods, see page II or contact the *GPO Access* User Support Team via:

★ Phone: toll-free: 1-888-293-6498

★ Email: gpoaccess@gpo.gov

FEDERAL REGISTER Published daily, Monday through Friday, (not published on Saturdays, Sundays, or on official holidays), by the Office of the Federal Register, National Archives and Records Administration, Washington, DC 20408, under the Federal Register Act (49 Stat. 500, as amended; 44 U.S.C. Ch. 15) and the regulations of the Administrative Committee of the Federal Register (1 CFR Ch. I). Distribution is made only by the Superintendent of Documents, U.S. Government Printing Office, Washington, DC 20402.

The Federal Register provides a uniform system for making available to the public regulations and legal notices issued by Federal agencies. These include Presidential proclamations and Executive Orders and Federal agency documents having general applicability and legal effect, documents required to be published by act of Congress and other Federal agency documents of public interest. Documents are on file for public inspection in the Office of the Federal Register the day before they are published, unless earlier filing is requested by the issuing agency.

The seal of the National Archives and Records Administration authenticates this issue of the Federal Register as the official serial publication established under the Federal Register Act. 44 U.S.C. 1507 provides that the contents of the **Federal Register** shall be judicially noticed.

The Federal Register is published in paper, 24x microfiche and as an online database through *GPO Access*, a service of the U.S. Government Printing Office. The online edition of the **Federal Register** on *GPO Access* is issued under the authority of the Administrative Committee of the Federal Register as the official legal equivalent of the paper and microfiche editions. The online database is updated by 6 a.m. each day the **Federal Register** is published. The database includes both text and graphics from Volume 59, Number 1 (January 2, 1994) forward. Free public access is available on a Wide Area Information Server (WAIS) through the Internet and via asynchronous dial-in. Internet users can access the database by using the World Wide Web; the Superintendent of Documents home page address is http://www.access.gpo.gov/su__docs/, by using local WAIS client software, or by telnet to swais.access.gpo.gov, then login as guest, (no password required). Dial-in users should use communications software and modem to call (202) 512–1661; type swais, then login as guest (no password required). For general information about *GPO Access*, contact the *GPO Access* User Support Team by sending Internet e-mail to gpoaccess@gpo.gov; by faxing to (202) 512–1262; or by calling toll free 1–888–293–6498 or (202) 512–1530 between 7 a.m. and 5 p.m. Eastern time, Monday–Friday, except for Federal holidays.

The annual subscription price for the **Federal Register** paper edition is $555, or $607 for a combined **Federal Register**, Federal Register Index and List of CFR Sections Affected (LSA) subscription; the microfiche edition of the **Federal Register** including the Federal Register Index and LSA is $220. Six month subscriptions are available for one-half the annual rate. The charge for individual copies in paper form is $8.00 for each issue, or $8.00 for each group of pages as actually bound; or $1.50 for each issue in microfiche form. All prices include regular domestic postage and handling. International customers please add 25% for foreign handling. Remit check or money order, made payable to the Superintendent of Documents, or charge to your GPO Deposit Account, VISA or MasterCard. Mail to: New Orders, Superintendent of Documents, P.O. Box 371954, Pittsburgh, PA 15250–7954.

There are no restrictions on the republication of material appearing in the **Federal Register.**

How To Cite This Publication: Use the volume number and the page number. Example: 60 FR 12345.

SUBSCRIPTIONS AND COPIES

PUBLIC	
Subscriptions:	
Paper or fiche	**202–512–1800**
Assistance with public subscriptions	**512–1806**
General online information	**202–512–1530; 1–888–293–6498**
Single copies/back copies:	
Paper or fiche	**512–1800**
Assistance with public single copies	**512–1803**
FEDERAL AGENCIES	
Subscriptions:	
Paper or fiche	**523–5243**
Assistance with Federal agency subscriptions	**523–5243**

For other telephone numbers, see the Reader Aids section at the end of this issue.

NOW AVAILABLE ONLINE

The January 1997 Office of the Federal Register Document Drafting Handbook

Free, easy, online access to the newly revised January 1997 Office of the Federal Register Document Drafting Handbook (DDH) is now available at:

http://www.nara.gov/nara/fedreg/ddh/ddhout.html

This handbook helps Federal agencies to prepare documents for publication in the **Federal Register**.

For additional information on access, contact the Office of the Federal Register's Technical Support Staff.

Phone: 202–523–3447

E-mail: info@fedreg.nara.gov

FEDERAL REGISTER WORKSHOP

THE FEDERAL REGISTER: WHAT IT IS AND HOW TO USE IT

FOR: Any person who uses the Federal Register and Code of Federal Regulations.

WHO: Sponsored by the Office of the Federal Register.

WHAT: Free public briefings (approximately 3 hours) to present:

1. The regulatory process, with a focus on the Federal Register system and the public's role in the development of regulations.
2. The relationship between the Federal Register and Code of Federal Regulations.
3. The important elements of typical Federal Register documents.
4. An introduction to the finding aids of the FR/CFR system.

WHY: To provide the public with access to information necessary to research Federal agency regulations which directly affect them. There will be no discussion of specific agency regulations.

WASHINGTON, DC

WHEN: June 17, 1997 at 9:00 am

WHERE: Office of the Federal Register
Conference Room
800 North Capitol Street, NW.
Washington, DC
(3 blocks north of Union Station Metro)

RESERVATIONS: 202–523–4538

FOR ADDITIONAL BRIEFINGS SEE THE ANNOUNCEMENT IN READER AIDS

Printed on recycled paper containing 100% post consumer waste

Contents

Federal Register

Vol. 62, No. 92

Tuesday, May 13, 1997

Agricultural Marketing Service
RULES
Pork promotion, research, and consumer information:
Assessment rate increase, 26205–26207
PROPOSED RULES
Milk marketing orders:
New Mexico-West Texas, 26257–26258
Texas, 26255–26257

Agriculture Department
See Agricultural Marketing Service
See Farm Service Agency
See Federal Crop Insurance Corporation
See Food Safety and Inspection Service
See Forest Service
See Grain Inspection, Packers and Stockyards Administration
See Rural Business-Cooperative Service
See Rural Housing Service
See Rural Utilities Service

Army Department
See Engineers Corps

Assassination Records Review Board
NOTICES
Meetings; Sunshine Act, 26282

Centers for Disease Control and Prevention
NOTICES
Grants and cooperative agreements; availability, etc.:
Childhood lead poisoning prevention program, 26315–26319
Meetings:
Chronic Fatigue Syndrome Coordinating Committee, 26319

Children and Families Administration
NOTICES
Agency information collection activities:
Submission for OMB review; comment request, 26319–26320

Civil Rights Commission
NOTICES
Meetings; State advisory committees:
California, 26282

Coast Guard
RULES
Regattas and marine parades:
California Cup Race, 26229
NOTICES
Designated areas:
Eighth Coast Guard District Regional Examination Center; issuance of first class pilot licenses and endorsements, 26345
National preparedness for response exercise program; workshop and comment request, 26346

Commerce Department
See International Trade Administration
See National Institute of Standards and Technology
See National Oceanic and Atmospheric Administration

Comptroller of the Currency
NOTICES
Capital and accounting standards differences among Federal banking and thrift agencies; report to Congress, 26355–26362

Corporation for National and Community Service
NOTICES
Foster grandparent and senior companion programs; income eligibility levels, 26294–26296

Defense Department
See Engineers Corps
NOTICES
Meetings:
Defense Intelligence Agency Scientific Advisory Board, 26296, 26297
Dependents' Education Advisory Council, 26296–26297
Wage Committee, 26296

Employment and Training Administration
NOTICES
Unemployment compensation:
Ex-servicemembers; remuneration schedules, 26329

Energy Department
See Energy Efficiency and Renewable Energy Office
See Federal Energy Regulatory Commission
NOTICES
Defense Nuclear Facilities Safety Board recommendations:
Uranium-233; safe storage, 26298
Meetings:
Environmental Management Site-Specific Advisory Board—
Idaho National Engineering and Environmental Laboratory, 26297
Oak Ridge Reservation, 26297–26298

Energy Efficiency and Renewable Energy Office
NOTICES
Committees; establishment, renewal, termination, etc.:
National Electric and Magnetic Field Advisory Committee, 26298

Engineers Corps
RULES
Army Department permits processing; editorial changes, 26229–26230

Environmental Protection Agency
RULES
Air quality planning purposes; designation of areas:
Minnesota, 26230–26235
PROPOSED RULES
Air quality planning purposes; designation of areas:
Minnesota, 26266
Water pollution control:
Ocean dumping; site designations—
Mud Dump Site, NJ and NY, 26267–26279

NOTICES
Agency information collection activities:
Proposed collection; comment request, 26303–26304
Meetings:
Enforcement and compliance assurance program national performance measures strategy; stakeholders/regulatory partners, 26304–26305
Pesticide, food, and feed additive petitions:
DowElanco et al., 26305–26313
Pesticides; emergency exemptions, etc.:
Carbofuran, 26313–26314
Superfund program:
Prospective purchaser agreements—
Autodeposition Site, IL, 26314

Executive Office of the President
See Presidential Documents

Farm Service Agency
RULES
Program regulations:
Housing preservation grant program, 26207–26211

Federal Aviation Administration
RULES
Airworthiness directives:
Aerospace Technologies of Australia, 26221–26223
Fairchild, 26223–26224
Class E airspace; correction, 26224–26225
PROPOSED RULES
Airworthiness directives:
Empresa Brasileira de Aeronautica, S.A. (EMBRAER), 26258–26261
Raytheon, 26261–26263
Class E airspace, 26263–26266
NOTICES
Exemption petitions; summary and disposition, 26346

Federal Communications Commission
RULES
Communications equipment:
Radio frequency devices—
Spread spectrum transmission systems operation in 915, 2450, and 5800 MHz bands; frequency hopping reduction, etc., 26239–26245
Television broadcasting:
Telecommunications Act of 1996—
Open video systems; reporting and recordkeeping requirements, 26235–26239
Sexually explicit adult programming; scrambling or blocking; enforcement date, 26245–26246

Federal Crop Insurance Corporation
RULES
Crop insurance regulations:
Fresh market sweet corn
Correction, 26205
PROPOSED RULES
Crop insurance regulations:
Tobacco, 26248–26252

Federal Energy Regulatory Commission
NOTICES
Electric rate and corporate regulation filings:
KCS Power Marketing, Inc., et al., 26301–26303
Applications, hearings, determinations, etc.:
Egan Hub Partners, L.P., 26299
Koch Gateway Pipeline Co., 26299
Mobile Bay Pipeline Co., 26299
Transcontinental Gas Pipe Line Corp., 26300–26301

Federal Highway Administration
NOTICES
Environmental statements; notice of intent:
Crow Wing County, MN, 26346–26347

Federal Railroad Administration
NOTICES
Exemption petitions, etc.:
National Railroad Passenger Corp. (AMTRAK), 26347–26348

Federal Reserve System
RULES
Availability of funds and collection of checks (Regulation CC):
Technical amendments, 26220–26221
NOTICES
Banks and bank holding companies:
Change in bank control, 26314–26315
Formations, acquisitions, and mergers, 26315
Permissible nonbanking activities, 26315
Meetings; Sunshine Act, 26315

Fish and Wildlife Service
NOTICES
Endangered and threatened species:
Incidental take permits—
Georgetown County, SC; red-cockaded woodpeckers, 26322–26323

Food and Drug Administration
RULES
Food additives:
1,3-butylene glycol, 26225–26228
Medical devices:
Investigational use devices; export requirements; technical amendment, 26228–26229
NOTICES
Meetings:
System suitability for chromatographic analysis; public workshop, 26320

Food Safety and Inspection Service
RULES
Meat and poultry inspection:
Pathogen reduction; hazard analysis and critical control point (HAACP) systems—
Technical corrections and amendments, 26211–26219

Foreign Claims Settlement Commission
NOTICES
Meetings; Sunshine Act, 26326–26328

Forest Service
NOTICES
Appealable decisions; legal notice:
Rocky Mountain region, 26280–26281
Meetings:
National Urban and Community Forestry Advisory Council, 26281–26282

General Services Administration
RULES
Federal travel:
Last move home benefits for immediate family of deceased employees, etc., 26374–26375

Grain Inspection, Packers and Stockyards Administration
PROPOSED RULES
Fees:
Official inspection and weighing services, 26252–26255

Health and Human Services Department
See Centers for Disease Control and Prevention
See Children and Families Administration
See Food and Drug Administration
See Health Resources and Services Administration
See National Institutes of Health
See Substance Abuse and Mental Health Services Administration

Health Resources and Services Administration
NOTICES
Meetings:
National Health Service Corps National Advisory Council, 26320

Housing and Urban Development Department
NOTICES
Grants and cooperative agreements; availability, etc.:
Emergency shelter grants program—
Indian tribes and Alaskan Native villages; set-aside allocation; correction, 26322

Interior Department
See Fish and Wildlife Service
See Land Management Bureau
See National Park Service

Internal Revenue Service
NOTICES
Agency information collection activities:
Proposed collection; comment request, 26362–26365

International Trade Administration
NOTICES
Antidumping:
Cut-to-length carbon steel plate from—
Belgium, 26282–26283
Granular polytetrafluoroethylene resin from—
Italy, 26283–26286
Welded carbon steel pipe and tube from—
Turkey, 26286–26289
Countervailing duties:
Extruded rubber thread from—
Malaysia, 26289–26292
Countervailing duty orders:
Determinations not to revoke, 26292–26293

Justice Department
See Foreign Claims Settlement Commission
See Justice Programs Office

Justice Programs Office
NOTICES
Agency information collection activities:
Submission for OMB review; comment request, 26328

Labor Department
See Employment and Training Administration
NOTICES
Agency information collection activities:
Submission for OMB review; comment request, 26328–26329

Land Management Bureau
NOTICES
Public land orders:
California, 26324

Maritime Administration
NOTICES
Agency information collection activities:
Proposed collection; comment request, 26348

National Highway Traffic Safety Administration
NOTICES
Motor vehicle safety standards:
Nonconforming vehicles—
Importation eligibility; determinations, 26348–26352

National Institute of Standards and Technology
NOTICES
Information processing standards, Federal:
Digital signature standard, 26293–26294
Public-key based cryptographic key agreement and exchange, 26294

National Institutes of Health
NOTICES
Meetings:
National Institute of Allergy and Infectious Diseases, 26320–26321
National Institute of Mental Health, 26321

National Oceanic and Atmospheric Administration
RULES
Fishery conservation and management:
Alaska; fisheries of Exclusive Economic Zone—
Pacific halibut and sablefish, 26246–26247

National Park Service
NOTICES
Concession contract negotiations:
Cape Cod National Seashore, MA; golf course facilities and services operation, 26324
Everglades National Park, FL; TW Recreational Services, Inc., 26325
Gateway National Recreation Area; food service facilities and services, 26325
Environmental statements; availability, etc.:
Natural Bridges National Monument, UT, 26325–26326
National Register of Historic Places:
Pending nominations, 26326

National Transportation Safety Board
NOTICES
Meetings; Sunshine Act, 26329

Nuclear Regulatory Commission
RULES
Practice rules:
Domestic licensing proceedings—
Informal small entity guidance, 26219–26220
NOTICES
Environmental statements; availability, etc.:
Toledo Edison Co. et al., 26330–26331
Generic letters:
Emergency core cooling and containment spray systems; degradation potential, 26331–26340
Meetings; Sunshine Act, 26340–26341
Applications, hearings, determinations, etc.:
Peco Energy Co. et al., 26329–26330
Pennsylvania Power & Light Co., 26330

Nuclear Waste Technical Review Board
NOTICES
Meetings, 26341

Presidential Documents
PROCLAMATIONS
Special observances:
Defense Transportation Day, National, and National Transportation Week (Proc. 7002), 26379–26380
ADMINISTRATIVE ORDERS
Human subjects of classified research; strengthened protections (Memorandum of March 27, 1997), 26369–26371

Public Health Service
See Centers for Disease Control and Prevention
See Food and Drug Administration
See Health Resources and Services Administration
See National Institutes of Health
See Substance Abuse and Mental Health Services Administration

Railroad Retirement Board
NOTICES
Agency information collection activities:
Submission for OMB review; comment request, 26342
Meetings; Sunshine Act, 26342

Rural Business-Cooperative Service
RULES
Program regulations:
Housing preservation grant program, 26207–26211

Rural Housing Service
RULES
Program regulations:
Housing preservation grant program, 26207–26211

Rural Utilities Service
RULES
Program regulations:
Housing preservation grant program, 26207–26211

Securities and Exchange Commission
NOTICES
Self-regulatory organizations; proposed rule changes:
Delta Clearing Corp., 26342–26344

Small Business Administration
NOTICES
Disaster loan areas:
Kentucky, 26344
Minnesota, 26344–26345
Applications, hearings, determinations, etc.:
Blue Ridge Investors L.P., 26344

Substance Abuse and Mental Health Services Administration
NOTICES
Meetings:
SAMHSA special emphasis panels, 26321

Surface Transportation Board
NOTICES
Railroad operation, acquisition, construction, etc.:
CSX Corp. et al., 26352–26355

Transportation Department
See Coast Guard
See Federal Aviation Administration
See Federal Highway Administration
See Federal Railroad Administration
See Maritime Administration
See National Highway Traffic Safety Administration
See Surface Transportation Board
NOTICES
Agency information collection activities:
Submission for OMB review; comment request, 26345

Treasury Department
See Comptroller of the Currency
See Internal Revenue Service

United States Information Agency
NOTICES
Art objects; importation for exhibition:
Painting the Universe: Frantisek Kupka, Pioneer in Abstraction, 26365

Separate Parts In This Issue

Part II
The President, 26369–26371

Part III
General Services Administration, 26374–26375

Part IV
The President, 26379–26380

Reader Aids
Additional information, including a list of public laws, telephone numbers, reminders, and finding aids, appears in the Reader Aids section at the end of this issue.

Electronic Bulletin Board
Free **Electronic Bulletin Board** service for Public Law numbers, **Federal Register** finding aids, and a list of documents on public inspection is available on 202–275–1538 or 275–0920.

CFR PARTS AFFECTED IN THIS ISSUE

A cumulative list of the parts affected this month can be found in the Reader Aids section at the end of this issue.

3 CFR
Proclamation:
7002.....26379
Administrative Orders:
Memorandums:
March 27, 1997 26369

7 CFR
457.....26205
1230.....26205
1944.....26207
Proposed Rules:
435.....26248
457.....26248
800.....26252
1126.....26255
1138.....26257

9 CFR
308.....26211
310.....26211
381.....26211
416.....26211

10 CFR
2.....26219

12 CFR
229.....26220

14 CFR
39 (2 documents) 26221, 26223
71.....26224
Proposed Rules:
39 (2 documents) 26258, 26261
71 (3 documents) 26263, 26264, 26265

21 CFR
172.....26225
812.....26228

33 CFR
100.....26229
325.....26229

40 CFR
81.....26230
Proposed Rules:
81.....26266
228.....26267

41 CFR
302-1.....26374
302-6.....26374

47 CFR
1.....26235
2.....26239
15.....26239
76 (2 documents) 26235, 26245

50 CFR
679.....26246

Rules and Regulations

Federal Register
Vol. 62, No. 92
Tuesday, May 13, 1997

This section of the FEDERAL REGISTER contains regulatory documents having general applicability and legal effect, most of which are keyed to and codified in the Code of Federal Regulations, which is published under 50 titles pursuant to 44 U.S.C. 1510.

The Code of Federal Regulations is sold by the Superintendent of Documents. Prices of new books are listed in the first FEDERAL REGISTER issue of each week.

DEPARTMENT OF AGRICULTURE

Federal Crop Insurance Corporation

7 CFR Part 457

Common Crop Insurance Regulations, Fresh Market Sweet Corn Crop Insurance Provisions; Correction

AGENCY: Federal Crop Insurance Corporation, USDA.

ACTION: Final rule; correction.

SUMMARY: The document contains a correction to the final regulation which was published Friday, March 28, 1997 (62 FR 14781–14786). The regulation pertains to the insurance of fresh market sweet corn.

EFFECTIVE DATE: May 13, 1997.

FOR FURTHER INFORMATION CONTACT: Linda Williams, Insurance Management Specialist, Research and Development, Product Development Division, Federal Crop Insurance Corporation, United States Department of Agriculture, 9435 Holmes Road, Kansas City, MO 64131, telephone (816) 926–7730.

SUPPLEMENTARY INFORMATION:

Background

The final regulation that is the subject of this correction was intended to provide policy changes to better meet the needs of the insured, include the current fresh market sweet corn endorsement under the Common Crop Insurance Policy for ease of use and consistency of terms, and to restrict the effect of the current fresh market sweet corn endorsement to the 1997 and prior crop years.

Need for Correction

As published, the final regulation contained an error which may prove to be misleading and is in need of clarification.

Correction of Publication

Accordingly, the publication on March 28, 1997, of the final regulation at 62 FR 14781–14786 is corrected as follows:

PART 457—[CORRECTED]

§ 457.129 [Corrected]

On page 14785, in the third column, in § 457.129, section 14(b)(2) is corrected to read:

(2) Multiplying each result in section 14(b)(1) by the percentage for the applicable stage (see section 3(d));

Signed in Washington DC, on May 7, 1997.

Kenneth D. Ackerman,

Manager, Federal Crop Insurance Corporation.

[FR Doc. 97–12451 Filed 5–12–97; 8:45 am]

BILLING CODE 3410–08–P

DEPARTMENT OF AGRICULTURE

Agricultural Marketing Service

7 CFR Part 1230

[No. LS–97–001]

Pork Promotion, Research, and Consumer Information Order—Increase in Importer Assessments

AGENCY: Agricultural Marketing Service, USDA.

ACTION: Final rule.

SUMMARY: Pursuant to the Pork Promotion, Research, and Consumer Information Act (Act) of 1985 and the Pork Promotion, Research, and Consumer Information Order (Order) issued thereunder, this final rule increases by eight-hundredths of a cent per pound the amount of the assessment per pound due on imported pork and pork products to reflect an increase in the 1996 five-market average price for domestic barrows and gilts. This action brings the equivalent market value of the live animals from which such imported pork and pork products were derived in line with the market values of domestic porcine animals. These changes will facilitate the continued collection of assessments on imported porcine animals, pork, and pork products.

EFFECTIVE DATE: June 12, 1997.

FOR FURTHER INFORMATION CONTACT: Ralph L. Tapp, Chief, Marketing Programs Branch, 202/720–1115.

SUPPLEMENTARY INFORMATION: This final rule has been determined not significant for purposes of Executive Order 12866 and therefore has not been reviewed by the Office of Management and Budget.

This final rule has been reviewed under Executive Order 12988, Civil Justice Reform. This is not intended to have a retroactive effect. The Act states that the statute is intended to occupy the field of promotion and consumer education involving pork and pork products and of obtaining funds thereof from pork producers and that the regulation of such activity (other than a regulation or requirement relating to a matter of public health or the provision of State or local funds for such activity) that is in addition to or different from the Act may not be imposed by a State.

The Act provides that administrative proceedings must be exhausted before parties may file suit in court. Under § 1625 of the Act, a person subject to an order may file a petition with the Secretary stating that such order, a provision of such order or an obligation imposed in connection with such order is not in accordance with law; and requesting a modification of the order or an exemption from the order. Such person is afforded the opportunity for a hearing on the petition. After the hearing, the Secretary would rule on the petition. The Act provides that the district court of the United States in the district in which such person resides or does business has jurisdiction to review the Secretary's determination, if a complaint is filed not later than 20 days after the date such person receives notice of such determination.

Pursuant to requirements set forth in the Regulatory Flexibility Act (5 United States Code (U.S.C.) 601 *et seq.*), the Agricultural Marketing Service (AMS) has considered the economic impact of this final action on small entities. The effect of the Order upon small entities was discussed in the September 5, 1986, issue of the **Federal Register** (51 FR 31898), and it was determined that the Order would not have a significant effect upon a substantial number of small entities. Many of the estimated 200 importers may be classified as small entities under the Small Business Administration definition (13 CFR 121.601). This final rule increases the amount of assessments on imported pork and pork products subject to assessment by eight-hundredths of a

cent per pound, or as expressed in cents per kilogram, nineteen-hundredths of a cent per kilogram. This increase is consistent with the increase in the annual price of domestic barrows and gilts for calendar year 1996. Adjusting the assessments on imported pork and pork products would result in an estimated increase in assessments of $422,000 over a 12-month period. Assessments collected for 1996 were $2,804,935. Accordingly, the Administrator of AMS has determined that this action will not have a significant economic impact on a substantial number of small entities.

The Act (7 U.S.C. 4801–4819) approved December 23, 1985, authorized the establishment of a national pork promotion, research, and consumer information program. The program was funded by an initial assessment rate of 0.25 percent of the market value of all porcine animals marketed in the United States and an equivalent amount of assessment on imported porcine animals, pork, and pork products. However, that rate was increased to 0.35 percent in 1991 (56 FR 51635) and to 0.45 percent effective September 3, 1995 (60 FR 29963). The final Order establishing a pork promotion, research, and consumer information program was published in the September 5, 1986, issue of the **Federal Register** (51 FR 31898; as corrected, at 51 FR 36383 and amended at 53 FR 1909, 53 FR 30243, 56 FR 4, 56 FR 51635, and 60 FR 29963) and assessments began on November 1, 1986.

The Order requires importers of porcine animals to pay the U.S. Customs Service (USCS), upon importation, the assessment of 0.45 percent of the animal's declared value and importers of pork and pork products to pay USCS, upon importation, the assessment of 0.45 percent of the market value of the live porcine animals from which such pork and pork products were produced. This final rule increases the assessments on all of the imported pork and pork products subject to assessment as published in the **Federal Register** as a final rule June 7, 1995, and effective September 3, 1995; (60 FR 29965). This increase is consistent with the increase in the annual average price of domestic barrows and gilts for calendar year 1996 as reported by USDA, AMS, Livestock and Grain Market News (LGMN) Branch. This increase in assessments will make the equivalent market value of the live porcine animal from which the imported pork and pork products were derived reflect the recent increase in the market value of domestic porcine animals, thereby promoting comparability between importer and domestic assessments. This final rule will not change the current assessment rate of 0.45 percent of the market value.

The methodology for determining the per pound amounts for imported pork and pork products was described in the Supplementary Information accompanying the Order and published in the September 5, 1986, **Federal Register** at 51 FR 31901. The weight of imported pork and pork products is converted to a carcass weight equivalent by utilizing conversion factors which are published in the Department's Statistical Bulletin No. 697 ''Conversion Factors and Weights and Measures.'' These conversion factors take into account the removal of bone, weight lost in cooking or other processing, and the nonpork components of pork products. Secondly, the carcass weight equivalent is converted to a live animal equivalent weight by dividing the carcass weight equivalent by 70 percent, which is the average dressing percentage of porcine animals in the United States. Thirdly, the equivalent value of the live porcine animal is determined by multiplying the live animal equivalent weight by an annual average market price for barrows and gilts as reported by USDA, AMS, LGMN Branch. This average price is published on a yearly basis during the month of January in LGMN Branch's publication ''Livestock, Meat, and Wool Weekly Summary and Statistics.'' Finally, the equivalent value is multiplied by the applicable assessment rate of 0.45 percent due on imported pork and pork products. The end result is expressed in an amount per pound for each type of pork or pork product. To determine the amount per kilogram for pork and pork products subject to assessment under the Act and Order, the cent per pound assessments are multiplied by a metric conversion factor 2.2046 and carried to the sixth decimal.

The formula in the preamble for the Order at 51 FR 31901 contemplated that it would be necessary to recalculate the equivalent live animal value of imported pork and pork products to reflect changes in the annual average price of domestic barrows and gilts to maintain equity of assessments between domestic porcine animals and imported pork and pork products.

The average annual market price increased from $41.99 in 1995 to $52.77 in 1996, an increase of about 25 percent. This increase will result in a corresponding increase in assessments for all HTS numbers listed in the table in § 1230.110, 60 FR 29965; June 7, 1995, of an amount equal to eight-hundredths of a cent per pound, or as expressed in cents per kilogram, nineteen-hundredths of a cent per kilogram. Based on the most recent available Department of Commerce, Bureau of Census, data on the volume of imported pork and pork products, the increase in assessment amounts would result in an estimated $422,000 increase in assessments over a 12-month period.

On February 26, 1997, AMS published in the **Federal Register** (62 FR 8639) a proposed rule which would increase the per pound assessment on imported pork and pork products consistent with increases in the 1996 average prices of domestic barrows and gilts to provide comparability between imported and domestic assessments. The proposal was published with a request for comments by March 28, 1997. No comments were received.

Accordingly, this final rule establishes the new per-pound and per-kilogram assessments on imported pork and pork products.

List of Subjects in 7 CFR Part 1230

Administrative practice and procedure, Advertising, Agricultural research, Marketing agreement, Meat and meat products, Pork and pork products.

For the reasons set forth in the preamble, 7 CFR Part 1230 is amended as follows:

PART 1230—PORK PROMOTION, RESEARCH, AND CONSUMER INFORMATION:

1. The authority citation for 7 CFR Part 1230 continues to read as follows:

Authority: 7 U.S.C. 4801–4819.

Subpart B—[Amended]

2. Section 1230.110 is revised to read as follows:

§ 1230.110 Assessments on imported pork and pork products.

(a) The following HTS categories of imported live porcine animals are subject to assessment at the rate specified.

Live porcine animals	Assessment
0103.10.0000	0.45 percent Customs Entered Value

Live porcine animals	Assessment
0103.91.0000	0.45 percent Customs Entered Value
0103.92.0000	0.45 percent Customs Entered Value

(b) The following HTS categories of imported pork and pork products are subject to assessment at the rates specified.

Pork and pork products	Assessment	
	cents/lb	cents/kg
0203.11.0000	.34	.749564
0203.12.1010	.34	.749564
0203.12.1020	.34	.749564
0203.12.9010	.34	.749564
0203.12.9020	.34	.749564
0203.19.2010	.39	.859794
0203.19.2090	.39	.859794
0203.19.4010	.34	.749564
0203.19.4090	.34	.749564
0203.21.0000	.34	.749564
0203.22.1000	.34	.749564
0203.22.9000	.34	.749564
0203.29.2000	.39	.859794
0203.29.4000	.34	.749564
0206.30.0000	.34	.749564
0206.41.0000	.34	.749564
0206.49.0000	.34	.749564
0210.11.0010	.34	.749564
0210.11.0020	.34	.749564
0210.12.0020	.34	.749564
0210.12.0040	.34	.749564
0210.19.0010	.39	.859794
0210.19.0090	.39	.859794
1601.00.2010	.47	1.036162
1601.00.2090	.47	1.036162
1602.41.2020	.51	1.124346
1602.41.2040	.51	1.124346
1602.41.9000	.34	.749564
1602.42.2020	.51	1.124346
1602.42.2040	.51	1.124346
1602.42.4000	.34	.749564
1602.49.2000	.47	1.036162
1602.49.4000	.39	.859794

Dated: May 7, 1997.

Barry Carpenter,

Director, Livestock and Seed Division.

[FR Doc. 97–12500 Filed 5–12–97; 8:45 am]

BILLING CODE 3410–02–P

DEPARTMENT OF AGRICULTURE

Rural Housing Service; Rural Business-Cooperative Service; Rural Utilities Service; Farm Service Agency

7 CFR Part 1944

RIN 0575–AB43

Housing Preservation Grant Program

AGENCIES: Rural Housing Service, Rural Business-Cooperative Service, Rural Utilities Service, and Farm Service Agency, USDA.

ACTION: Final rule.

SUMMARY: The Rural Housing Service (RHS), a successor agency to the Farmers Home Administration (FmHA), is amending its Housing Preservation Grant regulations. The purpose is to allow replacement housing where the grantee has determined that the costs for repair and rehabilitation on the recipient's (individual homeowners only) existing housing are not economically feasible or practical. These revisions will bring the regulations into conformance with the Housing and Community Development Act of 1992 amending the Housing Preservation Grant program, section 533 of the Housing Act of 1949.

EFFECTIVE DATE: June 12, 1997.

FOR FURTHER INFORMATION CONTACT: Sue M. Harris-Green, Senior Loan Specialist, Multi-Family Housing Processing Division, Rural Housing Service, United States Department of Agriculture, Washington, DC 20250, telephone (202) 720–1606 (this is not a toll-free number).

SUPPLEMENTARY INFORMATION:

Classification

This rule has been determined to be not significant for purposes of Executive Order 12866 and, therefore, has not been reviewed by the Office of Management and Budget (OMB).

Paperwork Reduction Act

The information collection requirements contained in this regulation have been approved by OMB under the provisions of 44 U.S.C. chapter 35 and have been assigned OMB control number 0575–0115 in accordance with the Paperwork Reduction Act of 1995 (44 U.S.C. 3507). This final rule does not revise or impose any new information collection or recordkeeping requirement from those approved by OMB.

Civil Justice Reform

This final rule has been reviewed under Executive Order 12988, Civil Justice Reform. In accordance with this rule: (1) All state and local laws and regulations that are in conflict with this rule will be preempted; (2) No retroactive effect will be given to this rule; and (3) Administrative proceedings in accordance with the regulations of the agency published at 7 CFR part 11, must be exhausted before bringing suit.

Unfunded Mandates Reform Act

Title II of the Unfunded Mandates Reform Act of 1995 (UMRA), Pub. L. 104–4, established requirements for Federal agencies to assess the effects of their regulatory actions on state, local, and tribal governments and the private sector. Under section 202 of UMRA, Federal agencies generally must prepare a written statement, including a cost-benefit analysis, for proposed and final rules with ''Federal mandates'' that may result in expenditures to state, local, or tribal governments, in the aggregate, or to the private sector, of $100 million or more in any one year. When such a statement is needed for a rule, section 205 of the UMRA generally requires RHS to identify and consider a reasonable number of regulatory alternatives and adopt the least costly, more cost-effective or least burdensome alternative that achieves the objectives of the rule.

The rule contains no Federal mandates (under the regulatory provisions of Title II of the UMRA) for state, local, and tribal governments or the private sector. Therefore, this rule is not subject to the requirements of sections 202 and 205 of the UMRA.

Environmental Impact Statement

This document has been reviewed in accordance with 7 CFR part 1940, subpart G, ''Environmental Program.'' It is the determination of RHS that this action does not constitute a major Federal action significantly affecting the quality of the human environment and in accordance with the national Environmental Policy Act of 1969, Pub. L. 91–190, an Environmental Impact Statement is not required.

Programs Affected

This program is listed in the Catalog of Federal Domestic Assistance under number 10.433, Rural Housing Preservation Grants.

Intergovernmental Consultation

This program is subject to the provisions of Executive Order 12372 which requires intergovernmental consultation with state and local officials (7 CFR part 3015, subpart V, 48 FR 29115, June 24, 1983). The Rural Housing Service has conducted intergovernmental consultation in the manner delineated in RD Instruction 1940–J, ''Intergovernmental Review of

Farmers Home Administration Programs and Activities.''

Background Information

The final rule incorporates title VII, section 711 of the Housing and Community Development Act of 1992 (Pub. L. 102–550, dated October 28, 1992) amending section 533 of the Housing Act of 1949, 42 U.S.C. 1490m, allowing for replacement housing where the grantee has determined that the costs for repair and rehabilitation on the recipient's (individual homeowners only) existing housing is not economically feasible. RHS is making no other significant changes other than to implement this statutory authority.

Public Comments

The Rural Housing Service received 11 comments on the April 17, 1995, proposed rule (60 FR 19168). The comments were from public and nonprofit organizations, governmental entities, and advocacy groups for housing.

General

Comment: One commented stated that the rule should permit replacement housing when it is less expensive than rehabilitation, even if the dwelling is not beyond repair or rehabilitation.

Rural Housing Service Response: The law restricts the use of housing preservation grant funds for replacement housing if it is not economically feasible for rehabilitation regardless of expense. The Agency, therefore, must only consider the economic feasibility of rehabilitation. In light of the comment and to reduce confusion caused by the term ''beyond repair or rehabilitation,'' we have changed § 1944.651(a), §1944.652 (a), and §1944.653 to state that individual housing that is owner occupied may qualify for replacement housing when it is determined by the grantee that the housing is not economically feasible for repair or rehabilitation.

Comment: Comments were directed to the proposed rule in §1944.659(b)(2) which requires that an individual homeowner must have been denied an RHS Section 502 loan for replacement housing. The commenters stated that the process will take too long and the language should be materially modified.

Rural Housing Service Response: Section 1944.659(b)(2) has been moved to § 1944.659(b)(3) to require that the grantee and RHS both determine that the owner of the dwelling is unable to afford a loan under Section 502 for replacement housing.

Comment: One commenter stated that the rule should permit the demolition of the existing housing after the new house is built so that families will have a place to live during construction.

Rural Housing Service Response: The Rural Housing Service has modified § 1944.659(c)(1) to require only that the house be demolished as part of the process of providing replacement housing. It will be determined by the grantee and individual homeowner when is the best time for demolition. However, the existing house must be demolished no later than occupation of the replacement house and cannot be sold.

Comment: One commenter stated that the rule should allow on-site improvements, such as installation of sidewalks, curbs, and off-street parking.

Rural Housing Service Response: Section 1944.664(d)(3) has been revised to add, ''and other on-site improvements required by local jurisdictions.''

Comment: One commenter was concerned about the Rural Housing Service's definition of dwelling. The commenter stated that at times a mobile home is the only solution in rural areas.

Rural Housing Service Response: The rule provides for the use of manufactured housing placed on permanent foundation or which will be put on permanent foundation with Housing Preservation Grant (HPG) funds. Manufactured housing is sometimes referred to as a mobile home.

Lists of Subjects in 7 CFR Part 1944

Grant programs—housing and community development, Home improvement, Loan programs—housing and community development, Nonprofit organizations, Reporting and recordkeeping requirements, Rural housing.

Therefore, chapter XVIII, title 7, Code of Federal Regulations is amended as follows:

PART 1944—HOUSING

1. The authority citation for part 1944 continues to read as follows:

Authority: 5 U.S.C. 301; 42 U.S.C. 1480.

Subpart N—Housing Preservation Grants

§ 1944.651 [Amended]

2. Section 1944.651 is amended by revising the phrase ''FmHA or its successor agency under Public Law 103–354'' to read ''RHS'' in paragraph (d); and by revising the last sentence and adding a new sentence to the end of paragraph (a) and revising paragraph (b) to read as follows:

§ 1944.651 General.

(a) * * * Such assistance will be used to reduce the cost of repair and rehabilitation, to remove or correct health or safety hazards, to comply with applicable development standards or codes, or to make needed repairs to improve the general living conditions of the residents, including improved accessibility by persons with a disability. Individual housing that is owner occupied may qualify for replacement housing when it is determined by the grantee that the housing is not economically feasible for repair or rehabilitation.

(b) The Rural Housing Service (RHS) will provide Housing Preservation Grant (HPG) assistance to grantees who are responsible for providing assistance to eligible persons without discrimination because of race, color, religion, sex, national origin, age, familial status, or disability.

* * * * *

3. Section 1944.652 is revised to read as follows:

§ 1944.652 Policy.

(a) The policy of RHS is to provide HPG's to grantees to operate a program which finances repair and rehabilitation activities to individual housing, rental properties, or co-ops for very low- and low-income persons. Individual housing that is owner occupied may qualify for replacement housing when it is determined by the grantee that the housing is not economically feasible for repair or rehabilitation. Grantees are expected to:

(1) Coordinate and leverage funding for repair and rehabilitation activities, as well as replacement housing, with housing and community development organizations or activities operating in the same geographic area; and

(2) Focus the program on rural areas and smaller communities so that it serves very low and low-income persons.

(b) RHS intends to permit grantees considerable latitude in program design and administration. The forms or types of assistance must provide the greatest long-term benefit to the greatest number of persons residing in individual housing, rental properties, or co-ops needing repair and rehabilitation or replacement of individual housing.

(c) Repairs and rehabilitation or replacement activities affecting properties on or eligible for listing on the National Register of Historic Places will be accomplished in a manner that supports national historic preservation objectives as specified in § 1944.673.

4. Section 1944.653 is amended by adding a sentence to the end of the section to read as follows:

§ 1944.653 Objective.

* * * Further, individual housing that is owner occupied may qualify for replacement housing when it is determined by the grantee that the housing is not economically feasible for repair or rehabilitation, except as specified in § 1944.659.

5. Section 1944.656 is amended by revising the definitions of ''Housing preservation,'' ''Overcrowding,'' ''Rural area,'' and ''Very low-income,'' by removing the definition of ''Adjusted annual income,'' and by adding definitions of ''Adjusted income,'' ''HPG,'' ''Replacement housing,'' and ''RHS'' in alphabetical order to read as follows:

§ 1944.656 Definitions.

* * * * *

Adjusted income. As defined in 7 CFR 3550.54(c).

* * * * *

Housing preservation. The repair and rehabilitation activities that contribute to the health, safety, and well-being of the occupant, and contribute to the structural integrity or long-term preservation of the unit. As a result of these activities, the overall condition of the unit or dwelling must be raised to meet RHS Thermal Standards for existing structures and applicable development standards for existing housing recognized by RHS in part 1924, subpart A, of this chapter or standards contained in any of the voluntary national model codes acceptable upon review by RHS. Properties included on or eligible for inclusion on the National Register of Historic Places are subject to the standards and conditions of § 1944.673. The term ''housing preservation'' does not apply to replacement housing.

HPG. Housing Preservation Grant.

* * * * *

Overcrowding. The guidelines in the table in this definition are designed to assist grantees in implementing occupancy standards. Part 1930, subpart C, exhibit B, paragraph VID2, of this chapter (available in any Rural Development State or District Office) gives further guidance. The table follows:

Number of bedrooms	Ideal number of persons
0	2
1	2
2	4
3	6
4	8
5	10

* * * * *

Replacement housing. The replacement of existing, individual owner occupied housing where repair and rehabilitation assistance is not economically feasible or practical. The term replacement housing does not apply to housing preservation. The overall condition of the unit or dwelling must meet RHS Thermal Standards for new or existing structures and applicable development standards for new or existing housing recognized by RHS in part 1924, subpart A, of this chapter or standards contained in any of the voluntary national model codes acceptable upon review by RHS. Properties included on or eligible for inclusion on the National Register of Historic Places are subject to the standards and conditions of § 1944.673 prior to replacement.

RHS. RHS means the Rural Housing Service, or a successor agency.

Rural area. The definition in 7 CFR part 3550 applies.

* * * * *

Very low-income. An adjusted annual income that does not exceed the very low-income limit according to size of household as established by HUD for the county of MSA where the property is located. Maximum very low-income limits are set forth in 7 CFR part 3550.

§ 1944.658 [Amended]

6. Section 1944.658 is amended by adding the words ''as well as for replacement housing'' after the word ''assistance'' in paragraph (a)(2).

7. Section 1944.659 is added to read as follows:

§ 1944.659 Replacement housing.

Replacement housing applies only to existing, individual owner occupied housing. Replacement housing does *not* apply to rental properties (single-unit or multiple-unit) or to cooperative housing projects. The grantee is responsible for determining the extent of the repairs and rehabilitation prior to any assistance given to an individual homeowner. If the cost of such repairs and rehabilitation is not economically feasible, then the grantee may consider replacing the existing housing with replacement housing, subject to the following:

(a) The HPG grantee:

(1) Shall document the total costs for all repairs and rehabilitation of the existing housing; and

(2) Shall document the basis for the determination that the costs for all repairs and rehabilitation for the existing housing are not economically feasible.

(b) The individual homeowner:

(1) Must meet all requirements of § 1944.661;

(2) Must lack the income and repayment ability to replace their existing home without the assistance of the HPG grantee;

(3) Must have been determined by the HPG grantee and RHS to be unable to afford a loan under section 502 for replacement housing; and

(4) Must be able to afford the replacement housing on terms set forth by the HPG grantee.

(c) The existing home:

(1) Must be demolished as part of the process of providing replacement housing. It will be determined by the grantee and individual homeowner when is the best time for demolition; and

(2) May not be sold to make way for the replacement housing.

(d) The replacement housing:

(1) May be either new housing or a dwelling brought onto the site of the existing housing;

(2) May use no more than $15,000 in HPG funds;

(3) Must meet all applicable requirements of 7 CFR 3550.57; and

(4) May not be sold within 5 years of completion of the project.

(e) Any moneys received by the homeowner from selling salvaged material after demolishing the existing home must be used towards the replacement housing.

§ 1944.661 [Amended]

8. Section 1944.661 is amended by revising the reference ''§1944.8 of subpart A of this part'' to read ''7 CFR 3550.54(c)'' in paragraph (a), and by revising the introductory text of paragraph (b)(2) and paragraph (b)(3) to read as follows:

§ 1944.661 Individual homeowners—eligibility for HPG assistance.

* * * * *

(b) * * *

(2) An undivided or divided interest in the property to be repaired, rehabilitated, or replaced when not all of the owners are occupying the property. HPG assistance may be made in such cases when:

* * * * *

(3) A leasehold interest in the property to be repaired, rehabilitated, or replaced. When the potential HPG recipient's ''ownership'' interest in the property is based on a leasehold

interest, the lease must be in writing and a copy must be included in the grantee's file. The unexpired portion of the lease must not be less than 5 years and must permit the recipient to make modifications to the structure without increasing the recipient's lease cost.

* * * * *

§ 1944.664 [Amended]

9. Section 1944.664 is amended by redesignating paragraphs (d) through (g) as paragraphs (e) through (h), respectively; by revising the words ''to make improvements that'' to read ''where they'' in the first sentence of the introductory text of newly redesignated paragraph (f); by adding the words ''or replacement housing'' after the word ''preservation'' in the introductory text of newly redesignated paragraph (g); and by revising the section heading, paragraph (a), and newly redesignated paragraphs (h)(1) and (h)(3) and by adding a new paragraph (d) to read as follows:

§ 1944.664 Housing preservation and replacement housing assistance.

(a) Grantees are responsible for providing loans, grants, or other comparable assistance to homeowners, owners of rental properties or co-ops for housing preservation or for replacement housing as described in §1944.656.

* * * * *

(d) Authorized replacement housing assistance includes, but is not limited to:

(1) Building a dwelling and providing related facilities for use by the individual homeowner as a permanent resident;

(2) Providing a safe and sanitary water and waste disposal system, together with related plumbing and fixtures, which will meet local health department requirements;

(3) Providing minimum site preparation and other on-site improvement including grading, foundation plantings, and minimal landscaping, and other on-site improvements required by local jurisdictions;

(4) Providing special design features or equipment when necessary because of physical handicap or disability of the HPG recipient or member of the household;

(5) Purchasing and installing approved energy saving measures and approved furnaces and space heaters which use a type of fuel that is commonly used, and is economical and dependably available;

(6) Providing storm cellars and similar protective structures, if typical for the area;

(7) Paying real estate taxes which are due and payable on the existing dwelling or site at the time of closing, if this amount is not a substantial part of the HPG assistance. (HPG assistance may not be made available if the real estate taxes which are due and payable are not paid at the time assistance is granted.);

(8) Providing living area for the HPG recipient and all members of the household as required in 7 CFR 3550.54(c);

(9) Moving a dwelling onto the site of the demolished, previously existing housing and meeting all HPG housing preservation requirements for repair and rehabilitation;

(10) Providing funds for demolishing the existing housing; and

(11) Any other cost that is reasonable and justifiable directly related to replacement activities.

* * * * *

(h) * * *

(1) Assist in the construction or completion of an addition (excluding paragraph (c)(11) of this section) or a new dwelling. This paragraph does not apply to replacement housing.

* * * * *

(3) Repair or rehabilitate as well as replace any property located in the Coastal Barrier Resources System.

10. Section 1944.665 is amended by revising the section heading and the first sentence to read as follows:

§ 1944.665 Supervision and inspection of work.

Grantees are responsible for supervising all rehabilitation and repair work, as well as replacement housing financed with HPG assistance. * * *

§ 1944.666 [Amended]

11. Section 1944.666 is amended by revising the reference ''§ 1944.64(f)'' to read ''§ 1944.664(g)'' in the last sentence of paragraph (b)(3); and by adding the words ''as well as for replacement housing (individual homeowners only)'' after the word ''rehabilitation'' in paragraph (b)(6).

§ 1944.667 [Amended]

12. Section 1944.667 is amended by adding the words ''or for individual homes replaced,'' after the word ''rehabilitated'' in the second sentence of the introductory text of paragraph (a).

13. Section 1944.670 is amended by revising paragraph (b) to read as follows:

§ 1944.670 Project income.

* * * * *

(b) Grantees are encouraged to establish a program which reuses income from loans after the grant period for continuing repair and rehabilitation activities, as well as for individual housing replaced.

§ 1944.671 [Amended]

14. Section 1944.671 is amended by adding ''/disability'' after the word ''handicap'' in the first sentence of the introductory text of paragraph (a), and by revising paragraph (a)(2) to read as follows:

§ 1944.671 Equal opportunity requirements and outreach efforts.

* * * * *

(a) * * *

(2) The term ''residential and real estate-related transaction'' includes the making or purchasing of loans, grants, or other financial assistance for purchasing, constructing, improving, repairing, or rehabilitating a unit or dwelling, as well as for replacement housing for individual homeowners.

* * * * *

15. Section 1944.672 is amended by revising paragraphs (a), (b), and (d) to read as follows:

§ 1944.672 Environmental requirements.

* * * * *

(a) The approval of an HPG grant for the repair, rehabilitation, or replacement of dwellings shall be a Class I action. As part of their preapplication materials, applicants shall submit Form RD 1940–20, ''Request for Environmental Information,'' for the geographical areas proposed to be served by the program. The applicant shall refer to exhibit F–1 of this subpart (available in any Rural Development State or District Office) when completing Form RD 1940–20. Further guidance on completing this form is available from the Agency office servicing the program.

(b) The use of HPG funds by the grantee to repair, rehabilitate, or replace on the same site, specific dwellings is generally exempt from an RHS environmental review. However, if such dwellings are located in a floodplain, wetland, or the proposed work is not concurred in by the Advisory Council on Historic Preservation under the requirements of §1944.673, an RHS environmental review is required. Dwellings within the Coastal Barrier Resources System are not eligible for HPG assistance. Applicants must include in their preapplication a process for identifying dwellings that may receive housing preservation or replacement housing assistance that will require an environmental assessment. This may be accomplished through use of exhibit F–2 of this subpart (available in any Rural Development State or District Office) or another process

supplying similar information acceptable to RHS.

* * * * *

(d) When a dwelling requiring an environmental assessment is proposed for HPG assistance, the grantee will immediately contact the RHS office designated to service the HPG grant. Prior to approval of HPG assistance to the recipient by the grantee, RHS will prepare the environmental assessment in accordance with part 1940, subpart G, of this chapter with the assistance of the grantee, as necessary. Paragraph VIII of exhibit C of this subpart (available in any Rural Development State or District Office) provides further guidance in this area.

* * * * *

16. Section 1944.673 is amended by revising the section heading and paragraph (b) to read as follows:

§ 1944.673 Historic preservation and replacement housing requirements and procedures.

* * * * *

(b) Each applicant for an HPG grant will provide, as part of its preapplication documentation submitted to RHS, a description of its proposed process for assisting very low- and low-income persons owning historic properties needing rehabilitation, repair, or replacement. ''Historic properties'' are defined as properties that are listed or eligible for listing on the National Register of Historic Places. Each HPG proposal shall comply with the provisions of Stipulation I, A–G of the PMOA (RD Instruction 2000–FF), available in any Rural Development State or District Office. Should RHS be required to assume responsibility for compliance with 36 CFR part 800 in accordance with Stipulation III of the PMOA, the grantee will assist RHS in preparing an environmental assessment. RHS will work with the grantee to develop alternative actions or mitigation measures, as appropriate.

* * * * *

§ 1944.683 [Amended]

17. Section 1944.683 is amended by redesignating paragraphs (b)(3) through (b)(7) as paragraphs (b)(4) through (b)(8), respectively; by adding the words ''as well as for replacement housing'' after the word ''rehabilitation'' in newly redesignated paragraph (b)(4)(i) and after the word ''financed'' in newly redesignated paragraph (b)(8); and by adding a new paragraph (b)(3) to read as follows:

§ 1944.683 Reporting requirements.

* * * * *

(b) * * *

(3) The use of HPG and any other funds for replacement housing.

* * * * *

18. Section 1944.700 is revised to read as follows:

§ 1944.700 OMB control number.

According to the Paperwork Reduction Act of 1995 (44 U.S.C. chapter 35), no persons are required to respond to a collection of information unless it displays a valid OMB control number. The valid OMB control number for the information collection in this subpart is 0575–0115.

Dated: April 17, 1997.

Jill Long Thompson,

Under Secretary, Rural Development.

[FR Doc. 97–12315 Filed 5–12–97; 8:45 am]

BILLING CODE 3410–XV–U

DEPARTMENT OF AGRICULTURE

Food Safety and Inspection Service

9 CFR Parts 308, 310, 381, and 416

[Docket No. 93–016T]

RIN 0583–AC28

Pathogen Reduction; Hazard Analysis and Critical Control Point (HACCP) Systems; Technical Corrections and Amendments

AGENCY: Food Safety and Inspection Service, USDA.

ACTION: Final rule.

SUMMARY: FSIS is making technical corrections and amendments to the final rule, ''Pathogen Reduction; Hazard Analysis and Critical Control Point (HACCP) Systems,'' published on July 25, 1996. This document responds to technical and scientific questions raised in the final rule regarding *E. coli* testing and to issues discussed at the ''Technical Conference Regarding *E. coli* Verification Testing,'' the ''Pathogen Reduction/HACCP National Implementation Conference,'' and the ''Regional Implementation Conferences.'' Also, this document clarifies ambiguities brought to FSIS' attention and provides guidance on various technical issues. Additionally, this document corrects inadvertent omissions and addresses minor editorial oversights.

EFFECTIVE DATE: June 12, 1997.

ADDRESSES: Reference materials cited in this docket will be available for public inspection in the FSIS Docket Room, Room 3806, 1400 Independence Ave SW, Washington, DC 20250 from 8:30 a.m. to 1:00 p.m. and from 2:00 p.m. to 4:30 p.m., Monday through Friday.

FOR FURTHER INFORMATION CONTACT: Ms. Patricia Stolfa, Assistant Deputy Administrator, Office of Policy, Program Development and Evaluation, (202) 205–0699.

SUPPLEMENTARY INFORMATION:

Background

On July 25, 1996, FSIS published a final rule, ''Pathogen Reduction; Hazard Analysis and Critical Control Point (HACCP) Systems,'' (61 FR 38806). The new regulations (1) require that each establishment develop, implement, and maintain written sanitation standard operating procedures (Sanitation SOP's); (2) require regular microbial testing for generic *E. coli* by slaughter establishments to verify the adequacy of the establishments' process controls for the prevention and removal of fecal contamination and associated bacteria; (3) establish pathogen reduction performance standards for *Salmonella* that slaughter establishments and establishments producing raw ground products must meet; and (4) require that all meat and poultry establishments develop and implement a system of preventive controls designed to improve the safety of their products, known as HACCP (Hazard Analysis and Critical Control Points).

With respect to the generic *E. coli* testing requirement, a number of questions were posed in the final rule, especially about how the requirement would be applied and what testing results might indicate in establishments that slaughter livestock.

Responses to those questions were received through written comments; through presentations and discussions at a public meeting convened by FSIS on September 12–13, 1996, specifically to discuss the generic *E. coli* testing requirement; at a national implementation conference in Washington, DC, September 30—October 3, 1996; and six subsequent regional implementation conferences occurring on October 15, 17, 22, 24, November 7 and 13, 1996, and at numerous briefings presented by FSIS representatives to a variety of audiences. Additionally, FSIS held the conference, ''Sanitation Standard Operating Procedures (Sanitation SOP's) and *E. coli* Testing Requirements,'' on January 23, 1997.

Through these comments and meetings, a number of technical questions have arisen which indicate the need for further clarification. Some of these have required a change in the

regulation; others simply require further technical guidance.

Technical Amendments

Sanitation Standard Operating Procedures

Questions were raised at the public meetings about the corrective actions an establishment might take in response to Sanitation SOP failures. Commenters suggested that the Agency make it clear that, in certain cases, improving the execution of the existing Sanitation SOP's, instead of revising the Sanitation SOP's, would be appropriate corrective action. In response to this concern, FSIS is amending section 416.15(b) to clarify that satisfactory corrective actions can include appropriate improvements in the execution of Sanitation SOP's.

Applicability of E coli Testing Requirement

Species Required to be Sampled and Tested for E. coli

At the *E. coli* meeting, implementation conferences, and other briefings, numerous questions were raised about the applicability of the generic *E. coli* testing requirement. There were questions about whether generic *E. coli* testing was required for all types of livestock, i.e., cattle, sheep, swine, goats, horses, mules and other equines (9 CFR 301.2). There were questions about whether generic *E. coli* testing was required for all types of poultry, i.e., chickens, turkeys, ducks, geese and guineas. There were also questions about whether generic *E. coli* testing was required for all market classes of livestock and poultry.

Clarification is needed because of inconsistencies in terminology used in the preamble and the regulatory text. For example, the preamble states that ''establishments that slaughter livestock or poultry will be required to begin sampling and testing for *E. coli*''(61 FR 38844). This statement is inconsistent with section 310.25 of the regulations which refers only to ''cattle and/or hogs'' and subsequently ''swine'' and ''market hogs.'' This inconsistency also makes it necessary to amend the regulations to clarify that all market classes of cattle, swine, chickens, and turkeys must sample and test for generic *E. coli*.

FSIS intends that all establishments slaughtering livestock and poultry sample and test for generic *E. coli*. However, the regulatory requirement codified in section 310.25(a)(1) is limited to cattle and swine. FSIS will propose rules in the future to carry out its goal of applying the generic *E. coli* testing requirement to other types of livestock, such as sheep, goats, and equines. Until that rulemaking is completed, only cattle and swine are required to be sampled and tested for generic *E. coli* (9 CFR 310.25(a)(1)).

With regard to poultry, the preamble of the final rule states that minor species, such as ducks, geese, and guineas, would be addressed at a later date. The rulemaking proposal to extend the *E. coli* testing requirement to all types of livestock will also propose extending the requirement to all types of poultry. However, until that rulemaking is completed, only chickens and turkeys are required to be sampled and tested for generic *E. coli* (9 CFR 381.94(a)).

At this time, FSIS is making technical amendments to ensure that the terminology in sections 310.25 and 381.94 of the regulations applicable to generic *E. coli* testing is consistent with other FSIS regulations promulgated under the Federal Meat Inspection Act and the Poultry Products Inspection Act.

Therefore, in section 325.10(a)(1), the phrase ''cattle and/or hogs'' will be replaced with the phrase ''cattle and/or swine.'' In section 310.25(a)(2)(iii), ''Sampling frequency,'' the word ''Cattle'' will replace the word ''Bovines.'' In section 310.25(a)(2)(v)(A) the word ''cattle'' will replace the word ''bovines.'' In section 310.25(a)(5), Table 1, the phrase ''type of livestock'' will replace the phrase ''slaughter class;'' the ''Steers/heifers'' and ''Cows/bulls'' lines will become a single ''Cattle'' line having the lower limit, upper limit, number of samples and maximum number of marginal now permitted in both these slaughter classes; and ''Market hogs,'' will be redesignated as ''Swine.'' In section 381.94(a)(5), Table 1, the phrase ''slaughter class'' will be replaced with ''type of poultry,'' and the term ''broilers'' will be replaced by ''chickens.''

These terminology changes also will clarify that all market classes of cattle or swine are categorized as ''cattle'' or ''swine,'' and that all market classes of chickens and turkey are categorized as ''chickens'' or ''turkeys.''

Testing Requirements for Market Classes

Commenters and questioners also expressed confusion and sought clarification about the applicability of the generic *E. coli* testing requirement when no specific m/M criteria are available. They assumed that if FSIS has not performed baseline studies and established m/M criteria for evaluation of results, the requirement would not apply. Commenters and questioners expressed their expectations that FSIS would perform baseline studies for a large variety of market classes of livestock and poultry, such as spent hens, sows and boars, calves, as well as numerous types of livestock and poultry that are slaughtered, dressed or chilled by non-traditional methods. At virtually every public meeting where generic *E. coli* testing was discussed, participants identified new livestock or poultry categories for baseline data collection.

All market classes of cattle, swine, chickens and turkeys must be sampled and tested for generic *E. coli*. FSIS's initial baseline studies were conducted on separate market classes of cattle, swine, and chickens. In future baseline studies, the Agency will sample from all market classes of a type of livestock or poultry to develop m/M criteria representative of that type of livestock or poultry. The baseline study being developed for turkeys includes samples from all market classes.

FSIS considered whether the m/M criteria for broilers could be applied to all market classes of chickens, such as, fowl, heavy broilers, and rock Cornish hens. FSIS determined that this would be acceptable for three reasons:

1. The processing parameters likely to affect levels of generic *E. coli* on carcasses, such as the use of automatic eviscerating equipment and common bath chillers, the permitted levels of chlorine in poultry processing waters, and the likely handling during processing were essentially the same for all market classes of chickens.

2. The m/M levels of generic *E. coli* on chickens are expressed as CFUs/ml, rather than total CFUs per carcass, and the actual values at the 80th and 98th percentile have been rounded to the nearest whole $\log_{10}$; both of these practices have the effect of minimizing variability and normalizing values.

3. Broilers constitute the vast majority (94%) of chickens slaughtered in the United States. An alternative to using the broiler criteria for all chickens would be to conduct a baseline that includes all market classes. However, the preponderance of broiler results will mean that other market classes are highly unlikely to affect the criteria.

These factors, taken together, mean that it would take very large differences among market classes to necessitate a change in the criteria found in the regulations. Accordingly, no amendment is being made and the criteria published in the July final rule will be applicable to all market classes of chickens.

FSIS expects that cattle and swine establishments will collect samples by sponging carcasses. If so, they will evaluate tests by the use of statistical process control, discussed below, and

the published m/M criteria in the regulations do not apply. FSIS will sample all market classes of either cattle or swine in its baseline studies to develop m/M criteria for samples collected by sponging carcasses.

Cattle and swine establishments collecting samples by excising tissue from carcasses will use the published m/M criteria. In the regulations the m/M criteria for the market classes cows/bulls and steers/heifers are the same. FSIS contends that these m/M criteria are applicable for other market classes of cattle because of the similarity in processing parameters and the methodology used to develop the m/M criteria. FSIS also believes that the m/M criteria for market hogs are applicable to other market classes of swine for the same general reasons. Therefore, the published m/M criteria apply to all market classes of cattle and swine.

While FSIS baseline surveys provide an appropriate national data base for establishment of m/M criteria, microbiological data bases with comparable accuracy and utility can be developed outside of FSIS. FSIS encourages industry members, academia, and other groups to work with the Agency to develop protocols for independent databases against which the 80th and 98th percentile definitions can be applied. In consultation with industry and consumer groups, FSIS may propose to publish these m/M values as criteria for evaluating results.

FSIS is still in the process of developing its long-term plan for baseline data collection studies. The plan will identify the types of livestock and poultry to be included in future baseline data collection efforts. Tentatively, the Agency has determined that types of livestock and poultry identified in the regulatory definitions are top priority candidates for FSIS baseline studies. For livestock, FSIS is considering developing baseline data collection studies for sheep, goats, and equines. For poultry, FSIS is conducting a baseline study for turkeys and is considering baseline data collection for ducks and geese. Representatives of State inspection programs and others have raised questions about FSIS intentions for baseline data collection on the voluntarily-inspected species, such as rabbits and ratites. FSIS will consider these requests for baseline data in developing its long-term plan.

Use of Statistical Process Control

The current m/M criteria apply to all classes of chickens, and to cattle and swine samples collected by excising tissue from carcasses. The m/M criteria for turkeys are still being developed. At this time, cattle and swine establishments collecting samples by sponging and turkey establishments will use statistical process control techniques to evaluate *E. coli* test results.

Statistical process control techniques are based on the principle that every product is produced by a process. All processes are subject to variation, which can be understood and controlled by statistical methods. A process that is in control is stable in terms of average level and degree of variation, i.e., it is predictable within limits and is ''doing its best.'' Control is attained, often by degrees, by detecting and eliminating special causes of variation, that is, causes not present at all times or not affecting all product output. Statistical process control initially involves evaluating data to determine process capability (the typical process performance level), then checking subsequent data to see whether they are consistent with this baseline level to ensure the process is in control and variations are within normal and acceptable limits. This is accomplished by checking for unreasonably high results, trends, etc., and looking for and correcting problems in the process when the signals occur.

Specific techniques of statistical process control include time plots, which chart measurements over time. This is the first technique to use with data collected over time and analyzed for patterns. Another technique is the control chart, which plots data over time but also displays an upper control limit for specific measurements, and a centerline, above and below which is an equal number of sample results. The centerline is in effect a median average. A sample result above the upper control limit would indicate the likely presence of a special cause of variation that needs to be addressed. Results within control limits indicate that the process is in control. Control charts are used for after-the-fact analysis of process performance and to assist in gaining and maintaining control of a process. In most situations more than one type of control chart is applicable. More detailed information on time charts and control charts can be found in texts on statistical process control, under the topic ''control charts.''

FSIS has concluded that statistical process control techniques will provide experience in ''process thinking'' (a central tenet of HACCP), develop an historical record of performance, and permit evaluation of the long-term stability of a process and determination of process capability (that is, how the process is actually working), and track the effectiveness of process improvement actions.

FSIS emphasizes that the value of microbiological testing is not negated by the lack of national m and M criteria against which to evaluate results. *E. coli* testing is intended to provide verification of process control for fecal contamination within individual establishments. While there is utility in being able to compare individual establishment data with national norms (i.e., national m and M criteria), the intent of the rule is to have microbial testing integrated into the overall process control procedure that establishments are implementing. In this context, establishment-specific databases, developed as establishments begin microbial testing, are also of value to individual establishments as a means of verifying their process control procedures.

FSIS is amending section 310.25 of the regulations to require establishments slaughtering cattle or swine to use either a three-site sponging or a three-site excision sample collection technique. This amendment to the meat regulations is necessary because of the inability to develop a conversion factor for results derived from two or three-site sample collection by sponging which correlates to the m/M criteria developed based on excision sampling methods used in conducting the baseline studies. If sponging is chosen, results must be evaluated using statistical process control techniques, because the m/M criteria derived from the baseline studies have not been validated for sample collection using sponging. If an establishment chooses to use the excision sample collection technique, results will be evaluated against national norms as expressed in the m/M criteria drawn from baseline studies. FSIS intends to give high priority in its baseline plan to collecting data that will support establishing m/M criteria using sponge sample collection techniques.

FSIS also is amending section 381.94 of the regulations to require turkey establishments to evaluate results using statistical process control techniques. This amendment is necessary because FSIS has not completed the development of m/M criteria for turkeys.

Establishments evaluating test results using statistical process control techniques will be subject to the regulatory provisions for failure to test and record (9 CFR 310.25(a)(7) and 381.94(a)(7)). Such establishments will not be subject to the regulatory provisions for the failure to meet criteria (9 CFR 310.25(a)(6) and 381.94(a)(6))

until such time as m/M criteria are developed and added to the regulations. The Agency intends to establish m/M criteria for each type of livestock and poultry based on national norms. Therefore, the requirements to utilize statistical process control techniques is temporary.

Sampling Frequencies

There are three amendments related to the following topics: (1) The requirement that establishments sample at the greater of one sample per week or the published frequency for each type of livestock or bird; (2) the requirement that all establishments are required to sample only the type of livestock or poultry which they slaughter in the largest number; (3) adjustments to sampling directions for very low volume establishments that do not operate each week or operate on a seasonal basis. Each of these three amendments is discussed below.

Sampling Frequencies For Very Low Volume Establishments

The final rule states that very low volume establishments ''shall collect one sample per week starting the first full week of June and continuing through August of each year.'' FSIS is aware that some very low volume establishments do not operate every week or operate only seasonally. Therefore, this requirement is amended to provide flexibility and accommodate all very low volume establishments. The revised regulations require that very low volume establishments begin sampling the first full week they operate after June 1 and continue collecting one sample per week in each week they operate until they have met their sampling requirement.

As discussed in the final rule, FSIS requires slaughter establishments to record and evaluate *E. coli* results in a ''moving window'' of 13 consecutive results, and the Agency is permitting very low volume establishments to conduct as few as 13 tests per year, in part because of their relatively simple and stable production environments.

If there are published m/M criteria for the type of livestock or poultry a very low volume establishment slaughters in the largest number, the establishment must sample that type of livestock or poultry at a minimum frequency of once per week until a series of 13 tests has met those m/M criteria.

If there are no m/M criteria for the type of livestock or poultry slaughtered in the largest number, a very low volume establishment must sample a minimum of once per week until 13 samples are collected. If the establishment does not slaughter their primary type of livestock or poultry for 13 weeks per year, the establishment must still collect one sample each week in which they conduct those slaughter operations. This provision will be eliminated once m/M criteria are developed for the type of livestock or poultry that is slaughtered in the greatest number.

One Type per Establishment

The final rule states that if a very low volume establishment slaughters multiple types of livestock or poultry, the establishment shall collect samples from the type it slaughters in the largest number. FSIS intended that this provision apply to all establishments. However, because of an inadvertent omission, this language was not incorporated into the regulatory text for all establishments. Therefore, FSIS is amending the regulations so that each slaughter establishment, regardless of size, conducts generic *E. coli* testing on the type of livestock or poultry that it slaughters in the largest number.

The purpose of the testing is not lot acceptance, but rather to provide each establishment with a microbial indication of how effective its sanitary dressing procedures are in preventing contamination of carcasses by fecal material, ingesta, and associated bacteria. The preamble stated that the required testing and criteria are intended to provide an initial basis for slaughter establishments and FSIS to begin using microbial testing to evaluate the adequacy of process control. To meet this regulatory objective, it is not necessary that all slaughter types be sampled. Whether the establishment slaughters one type or multiple types, *E. coli* test results provide information that establishments can use to verify their process controls over sanitary dressing.

Minimum Sampling Frequencies

The preamble to the final rule stated that establishments, except for very low volume establishments, must test at the frequencies established in the regulations or at a minimum of at least once per week. This weekly minimum requirement was inadvertently not incorporated into the regulatory language for other than very low volume establishments. These technical amendments add the once per week minimum to the regulatory language. Under this amendment, an establishment slaughtering 9,000 cattle and sampling at the once per week minimum shall collect 52 samples, rather than 30, as required by 1 test per 300. Obviously, the minimum of 52 assumes the establishment slaughters cattle each week during the year.

Sampling Sites

Two specific questions raised in the final rule with respect to the technical specifications of the generic *E. coli* testing requirement for cattle and swine carcasses addressed the issue of sample sites on carcasses. The questions were: ''[a]re there more appropriate anatomical sites for microbial testing than those adopted?'' and ''[a]re there worker safety concerns regarding sampling from difficult to reach carcass sites, and how can they be mitigated?''

The final reports, ''Analysis of ARS Baseline and Sponge Data'' and ''FSIS Comparison of Baseline Excision and Two-Site Sponge Method,'' describe results of data collection efforts by ARS and FSIS in cattle and swine establishments to compare sponge and baseline excision sampling methods and to seek conversion factors that would make sponge results comparable to baseline results. The baseline excision method for each slaughter class was defined in the protocol for the baseline study and specified the sites to sample, the area of tissue to analyze, and the amount of buffer to add to the tissue.

The final rule specified sampling cattle and swine with a sponge from the same three sites from which FSIS collected excision samples in baseline studies. During the comment period, industry representatives expressed concerns over inefficiencies and safety hazards associated with sampling the rump of cattle and the ham of swine. During preparation of the final rule, FSIS initiated a data collection effort by ARS to evaluate sponge methods with one or three sites, and to seek conversion factors that would make sponge results comparable to baseline results and to the m/M values derived therefrom. In response to the comments on the 3-site sponge method, the Agency conducted further data collection to compare a 2-site sponge method with the baseline method.

ARS compared the baseline method with the final rule's three-site sponge method and with a one-site sponge method, the one site being flank for cattle and belly for swine. They collected data on a total of 280 carcasses in one cattle establishment and one swine establishment and presented summaries of their results at the September 12–13, 1996, FSIS *E. coli* conference. FSIS later performed further statistical analyses on the results in response to comments at the conference. The results of these analyses are described in detail in the reports, and summarized here.

Because the lowest detectable levels (LDLs) of the sponge methods were well below the LDL of the baseline method, the sponge methods were expected to find more *E. coli* positives than the baseline method. The three-site sponge resulted in more *E. coli* positives than the baseline method for both cattle and swine. However, whereas the one-site sponge method found more *E. coli* positives for cattle, it gave less for swine (i.e., the difference in sites appeared to affect the prevalences found by the two sponge methods).

Since the two-site sponge method had not been included in the ARS study, FSIS undertook comparison of this sampling method with the baseline method. The Agency collected data on a total of 825 carcasses in three cattle establishments and four swine establishments. Results of this effort are presented in detail in the reports and are summarized here.

Once again, the sponge method was expected to result in more *E. coli* positives than the baseline method because of its lower LDL, and it did for all three cattle establishments sampled. However, sponging resulted in considerably fewer *E. coli* positives than the baseline method in three of the four swine establishments. One establishment, however, had 100 percent *E. coli* prevalence by both the two-site sponge and the baseline methods. That establishment also had higher levels of *E. coli* than the other swine establishments.

In addition to the qualitative comparison of sponge and baseline methods in terms of prevalence, FSIS also evaluated sponge results quantitatively in terms of recovery of bacteria relative to the baseline method. It was evident from the results that the sponge methods generally gave lower average microbial counts than the baseline method.

Where possible given the available data, FSIS evaluated recovery by two alternate methods suggested at the *E. coli* conference. However, there were several difficulties with getting reasonable estimates of recovery. First, numerous negative baseline results left recovery undefined for many carcasses. Second, the two recommended methods of defining recovery gave seriously different recovery values. Third, the sponge method gave appreciably more negative results for swine than the baseline method. All of these difficulties caused FSIS to abandon the effort to find a conversion factor.

In view of these findings, FSIS has determined that, at the present time, the third sampling site is necessary. If data can be developed that support a change to fewer, more accessible sampling sites, the Agency is very willing to consider them. In addition, as described above, livestock slaughtering establishments that want to relate their results to national norms may use the excision technique and the m/M criteria associated with the baseline studies.

Sampling Locations

Sampling location in the process is a factor for comparability of an establishment's results with the criteria derived from baseline studies. Establishments that slaughter, dress or chill types of livestock or poultry by using non-traditional methods, such as hot boning of swine and poultry and chilling of split turkey carcasses, may not be able to collect samples at the exact location in the slaughter process as was used in the baseline studies. FSIS is amending section 310.25(a)(2)(ii) to provide for sample collection after final wash, if sampling chilled carcasses is not possible. Similarly, FSIS is amending section 381.194(a)(2)(ii) to provide for sample collection after the final wash, if sampling at the end of the drip line is not possible.

Additionally, questions have arisen about whether random carcass sampling can only occur when carcasses are in the cooler. It is not FSIS's intention to limit random carcass sample selection in the cooler. The random sampling can be carried out before carcasses enter the cooler so that carcasses selected for sampling can be placed in a separate and convenient location in the cooler. The regulations require establishments to include in their written procedures how sampling randomness will be achieved (section 310.25(a)(2)(i)).

Technical Guidance

This section provides technical guidance for the following areas: (1) definition of very low volume slaughter establishment; (2) counting employees to determine establishment size for HACCP implementation; (3) FSIS intentions on rules of practice.

Very Low Volume Slaughter Establishments

The regulations define very low volume establishments for cattle, swine, chickens, and turkeys. These definitions are expressed in terms of the number of animals or birds slaughtered annually. Establishments should use 1996 slaughter data to determine whether they meet the definition. Livestock and poultry slaughtered under the custom exemption need not be counted.

Size Categories For HACCP Implementation

For purposes of determining whether an establishment is large, small, or very small, FSIS has established the following guidelines for counting employees. These guidelines combine the Small Business Administration procedures for counting employees to determine establishment size and the FSIS definition of ''official establishment.'' All paid employees who work within the official establishment are to be counted, whether full time, part time, or temporary. Employees should be counted whether or not they perform duties related to inspected products. Employee numbers should be averaged over a year.

One exception to the above guidance covers situations where headquarter's employees for firms with multiple establishments are located at one official establishment and their assigned duties are related to the company and not specifically to the official establishment where they are located. Such employees need not be counted. In addition, administrative staff, for example, billing and bookkeeping staff, working outside the official premises need not be counted. Unpaid family members of the owner or operator also need not be counted. Large firms that have employees engaged full-time in buying or selling products should count such staff even though they usually work outside the establishment.

Establishments are very small if they have fewer than 10 employees or annual sales of less than $2.5 million. In calculating annual sales, establishments should count all sales of inspected meat and poultry products produced at the establishment. Inspected product excludes product produced under a retail or custom exemption provision. Furthermore, ''Pass Through'' product that is produced in another establishment and resold without any further processing need not be counted. ''Pass Through'' includes the operation referred to as ''breaking bulk,'' if this operation involves only separating and resorting ''intact'' packages prepared at another establishment.

FSIS Intention Regarding Rules of Practice

The final rule stated that, upon an establishment's failure to test and record, inspection would be suspended in accordance with rules of practice that ''will be adopted for such proceedings upon a finding by FSIS that one or more provisions of subparagraphs (a) (1)–(4) of this section have not been complied

with and written notice has been provided to the establishment.'' FSIS has determined that a separate set of rules of practice for generic *E. coli* testing is not necessary. The Agency does, however, intend to review and propose revisions to its rules of practice (9 CFR 335.1 and 381.230). It plans to complete this process before the first HACCP implementation date, January 26, 1998. In the meantime, the Agency will use existing rules of practice for enforcement of Sanitation SOP's requirements and for enforcement actions when establishments fail to test and record results of generic *E. coli* analysis.

Technical Corrections

FSIS is making three technical corrections to the final rule. The first corrects the inadvertent requirement that custom and retail exempt establishments, as defined in section 303.1 of the Federal meat inspection regulations, comply with the requirements for Sanitation SOP's. These establishments are required to meet general sanitation requirements, including those in section 308.3. When FSIS drafted the final rule, it amended section 308.3 to ensure that meat and poultry establishments not only meet the general sanitation requirements but also comply with the regulations in Part 416, which require Sanitation SOP's. However, FSIS never intended to require custom and retail exempt establishments to comply with Sanitation SOP's. To clarify that point, FSIS is amending section 308.3 to include language that explicitly exempts these establishments from the part 416 requirements.

Secondly, FSIS is updating the footnotes in the ''*Salmonella* Performance Standards'' table (Table 2) in section 381.94(b)(1) of the poultry products inspection regulations. Footnote ''b'' states that the ''Broiler'' data was based on partial analysis and was subject to confirmation upon publication of the baseline survey. The baseline survey is complete and published. There are no changes to the numbers related to broilers. FSIS is, therefore, removing footnote ''b.'' Also, with the deletion of footnote ''b,'' the footnote designated as ''d'' (an editorial oversight omitted a footnote ''c'') will be redesignated as footnote ''b.''

Finally, FSIS is correcting the references in sections 325.10(a)(3) and 381.94(a)(3) to the AOAC International by updating the regulatory text and a footnote in the regulatory text to reflect the organization's new name and the current edition of its publication. Also, FSIS is clarifying what establishments must do if they intend to have samples analyzed by a method approved by a scientific body other than the AOAC International.

Executive Order 12866 and Regulatory Flexibility Act

This final rule has been determined to be significant and, therefore, has been reviewed by the Office of Management and Budget.

The Administrator has determined that this final rule will not have a significant economic impact on a substantial number of small entities, as defined by the Regulatory Flexibility Act (5 U.S.C. 601).

The Pathogen Reduction/HACCP final rule included a Final Regulatory Impact Assessment (FRIA) (61 FR 38945). The technical corrections and amendments do not change the cost and benefit estimates and impact assessments presented in the FRIA.

The technical amendments regarding Sanitation SOP's clarify the regulatory language to more accurately explain what FSIS intended corrective actions to encompass. There is no change in regulatory impact or cost of Sanitation SOP's. Similarly, the regulatory amendments that change terminology in sections 310.25(a) and 381.94(a) do not affect any regulatory requirements.

The technical amendments regarding statistical process control clarify how turkey establishments and livestock establishments collecting samples by sponging will analyze test results until m/M criteria are developed. This change will not affect the cost estimates.

In the Preliminary Regulatory Impact Analysis (PRIA) for the Pathogen Reduction/HACCP proposed rule, FSIS concluded that for each microbiological sample it would take 5 minutes ''* * * to prepare the paperwork and review the results of the sample analysis and plot the results on a statistical process control chart.'' In the FRIA, the Agency used this 5 minute estimate as the time it takes to record a window of *E. coli* test results and compare such results with m/M criteria. The Agency still believes that it takes approximately the same amount of time to conduct either of these processes.

FSIS has amended the regulations to clarify how sampling and testing must be conducted on hot-boned or hide-on product. These are not new requirements.

The FRIA estimated generic *E. coli* testing costs using an upper bound estimate of 24 dollars per sample. To develop this upper bound estimate for *E. coli* sampling, FSIS examined cost estimates reported in the PRIA and current cost estimates for FSIS testing programs. The proposed rule required establishments to collect *Salmonella* samples by excising tissue from carcasses, and therefore, the cost estimate factored in the time it takes to sample in such a manner. Similarly, FSIS samples are collected by excising tissue, and FSIS cost analyses of its testing program reflect this fact. Because sponging carcasses presumably takes less time to perform than excising tissue from carcasses, FSIS is confident that the cost estimates reported in the FRIA are upper bound estimates. FSIS expects all establishments to use the sponging method because excising tissue takes more time and devalues the carcasses. However, because the cost estimates were based on excision, establishments choosing to excise tissue should not incur costs greater than 24 dollars a sample.

The three technical amendments relating to sampling frequencies do not change the regulatory impact and cost to establishments. In the FRIA the Agency based its cost estimates on the assumption that establishments would sample at a minimum of 52 times a year. Also, the cost estimates assumed that establishments would only sample and test the type of livestock or poultry slaughtered in the largest number. Lastly, FSIS's analysis assumed that very low volume establishments sample and test once per week until the results show that they meet the published criteria.

Executive Order 12988

This final rule has been reviewed under Executive Order 12988, Civil Justice Reform. In this final rule: (1) all state and local laws and regulations that are inconsistent with this rule will be preempted; (2) no retroactive effect will be given to this rule; and (3) administrative proceedings will not be required before parties may file suit in court challenging this rule.

Paperwork Requirements

The Pathogen Reduction/HACCP final rule included a paperwork analysis (61 FR 38862) prepared in accordance with the Paperwork Reduction Act. FSIS has determined that the technical corrections and amendments in this rule do not change any information collection burden hours. The paperwork and recordkeeping burden hours were developed using the assumptions in the FRIA, discussed above.

Final Rules

List of Subjects

9 CFR Part 308

Meat inspection.

9 CFR Part 310

Meat inspection, Microbial testing.

9 CFR Part 381

Poultry and poultry products, Microbial testing.

9 CFR Part 416

Meat inspection, Poultry and poultry products.

For reasons set forth in this preamble, 9 CFR chapter III is amended as follows:

PART 308—SANITATION

1. The authority citation for part 308 continues to read as follows:

Authority: 21 U.S.C. 601–695; 7 CFR 2.18, 2.53

2. Section 308.3 is amended by revising the last sentence of paragraph (a) to read as follows:

§ 308.3 Establishments; sanitary conditions; requirements.

(a) * * * The provisions of part 416 of this chapter apply to all establishments, *except* establishments that are exempt in accordance with § 303.1 of this chapter.

PART 310—POST MORTEM INSPECTION

3. The authority citation for part 310 continues to read as follows:

Authority: 21 U.S.C. 601–695; 7 CFR 2.18, 2.53.

4. Section 310.25 is amended by revising paragraphs (a)(1), introductory test (a)(2)(ii),(a)(2)(iii), (a)(2)(v)(A), (a)(3), (a)(4), and (a)(5) to read as follows:

§ 310.25 Contamination with microorganisms; pathogen reduction performance standards for Salmonella.

(a) * * *

(1) Each official establishment that slaughters cattle and/or swine shall test for *Escherichia coli* Biotype 1 (*E. coli*). Establishments that slaughter more than one type of livestock or both livestock and poultry, shall test the type of livestock or poultry slaughtered in the greatest number. The establishment shall:

* * * * *

(2) Sampling requirements.

(i) * * *

(ii) *Sample collection.* The establishment shall collect samples from all chilled swine or cattle carcasses, *except* those boned before chilling (hot-boned), which must be sampled after the final wash. Samples shall be collected by either sponging or excising tissue from three sites on the selected carcass. On cattle carcasses, establishments shall sponge or excise tissue from the flank, brisket and rump, *except* for hide-on calves, in which case establishments shall take samples by sponging from inside the flank, inside the brisket, and inside the rump; on swine carcasses, establishments shall sponge or excise tissue from the ham, belly and jowl areas. [1]

(iii) *Sampling frequency.* Slaughter establishments, *except* very low volume establishments as defined in paragraph (a)(2)(v) of this section, shall take samples at a frequency proportional to the volume of production at the following rates:

Cattle: 1 test per 300 carcasses, but at a minimum one sample each week of operation.

Swine: 1 test per 1000 carcasses, but at a minimum one sample each week of operation.

* * * * *

(v) *Sampling in very low volume establishments.*

(A) Very low volume establishments annually slaughter no more than 6,000 cattle, 20,000 swine, or a combination of cattle and swine not exceeding 6,000 cattle and 20,000 total of both types. Very low volume establishments that collect samples by sponging shall collect at least one sample per week, starting the first full week of operation after June 1 of each year, and continue sampling at a minimum of once each week the establishment operates until June 1 of the following year or until 13 samples have been collected, whichever comes first. Very low volume establishments collecting samples by excising tissue from carcasses shall collect one sample per week, starting the first full week of operation after June 1 of each year, and continue sampling at a minimum of once each week the establishment operates until one series of 13 tests meets the criteria set forth in paragraph (a)(5)(i) of this section.

* * * * *

(3) *Analysis of samples.* Laboratories may use any quantitative method for analysis of *E. coli* that is approved as an AOAC Official Method of the AOAC International (formerly the Association of Official Analytical Chemists) [2] or approved and published by a scientific body and based on the results of a collaborative trial conducted in accordance with an internationally recognized protocol on collaborative trials and compared against the three tube Most Probable Number (MPN) method and agreeing with the 95 percent upper and lower confidence limit of the appropriate MPN index.

(4) *Recording of test results.* The establishment shall maintain accurate records of all test results, in terms of CFU/cm^2 of surface area sponged or excised. Results shall be recorded onto a process control chart or table showing at least the most recent 13 test results, by type of livestock slaughtered. Records shall be retained at the establishment for a period of 12 months and shall be made available to FSIS upon request.

(5) *Criteria for evaluation of test results.*

(i) An establishment excising samples from carcasses is operating within the criteria when the most recent *E. coli* test result does not exceed the upper limit (M), and the number of samples, if any, testing positive at levels above (m) is three or fewer out of the most recent 13 samples (n) taken, as follows:

TABLE 1.—EVALUATION OF E. COLI TEST RESULTS

Type of livestock	Lower limit of marginal range (m)	Upper limit of marginal range (M)	Number of sample tested (n)	Maximum number permitted in marginal range (c)
Cattle	Negative [a]	100 CFU/cm^2	13	3

[1] A copy of FSIS's ''Guidelines for *E. coli* Testing for Process Control verification in Cattle and Swine Slaughter Establishments'' is available for inspection in the FSIS Docket Room.

[2] A copy of the current edition/revision of the ''Official Methods of AOAC International,'' 16th edition, 3rd revision, 1997, is on file with the Director, Office of the Federal Register, and may be purchased from the Association of Official Analytical Chemists International, Inc., 481 North Frederick Ave., Suite 500, Gaithersburg, MD 20877–2417.

TABLE 1.—EVALUATION OF E. COLI TEST RESULTS—Continued

Type of livestock	Lower limit of marginal range (m)	Upper limit of marginal range (M)	Number of sample tested (n)	Maximum number permitted in marginal range (c)
Swine	10 CFU/cm[2]	10,000 CFU/cm[2]	13	3

[a] Negative is defined by the sensitivity of the method used in the baseline study with a limit of sensitivity of at least 5 cfu/cm^2 carcass surface area.

(ii) Establishments sponging carcasses shall evaluate *E. coli* test results using statistical process control techniques.

* * * * *

PART 381—POULTRY PRODUCTS INSPECTION REGULATIONS

5. The authority citation for part 381 continues to read as follows:

Authority: 7 U.S.C. 138f, 450; 21 U.S.C. 451–470, 7 CFR 2.18, 2.53

Subpart K—Post Mortem Inspection; Disposition of Carcasses and Parts

6. Section 381.94 is amended by revising paragraphs (a)(1) introductory text, (a)(2)(ii), (a)(2)(iii), (a)(2)(v)(A), (a)(3), (a)(4); and (a)(5) Table 1; by redesignating paragraph (a)(5) as (a)(5)(i); by adding a new paragraph (a)(5)(ii); and by removing the footnote b in Table 2 of paragraph (b)(1) and removing the symbol ''b'' as it appears after the term ''Broiler'' and redesignating footnote d as footnote b to read as follows:

§ 381.94 Contamination with microorganisms; process control verification criteria and testing; pathogen reduction standards.

(a) * * *

(1) Each official establishment that slaughters poultry shall test for *Escherichia coli* Biotype I (*E. coli*). Establishments that slaughter more than one type of poultry and/or poultry and livestock, shall test the type of poultry or livestock slaughtered in the greatest number. The establishment shall:

* * * * *

(2) Sampling requirements.

(i) * * *

(ii) *Sample collection*. Samples shall be collected by taking a whole bird from the end of the chilling process, after the drip line, and rinsing it in an amount of buffer appropriate to the type of bird being tested. If the bird is boned before chilling (hot boned poultry), the sample shall be taken from the end of the slaughter line instead of the end of the drip line.[1]

(iii) *Sampling frequency*. Slaughter establishments, *except* very low volume establishments as defined in paragraph (a)(2)(v) of this section, shall take samples at a frequency proportional to the establishment's volume of production at the following rates:

Chickens: 1 sample per 22,000 carcasses, but at a minimum one sample per each week of operation.

Turkeys: 1 sample per 3,000 carcasses, but at a minimum one sample each week of operation.

* * * * *

(v) *Sampling in very low volume establishments*

(A) Very low volume establishments annually slaughter no more than 440,000 chickens or 60,000 turkeys or a combination of chickens and turkeys not exceeding 60,000 turkeys and 440,000 birds total. Very low volume establishments slaughtering turkeys in the largest number shall collect at least one sample per week, starting the first full week of operation after June 1 of each year, and continue sampling at a minimum of once each week the establishment operates until June 1 of the following year or until 13 samples have been collected, whichever comes first. Very low volume establishments slaughtering chickens in the largest number shall collect one sample per week, starting the first full week of operation after June 1 of each year, and continue sampling at a minimum of once each week the establishment operates until one series of 13 tests meets the criteria set forth in paragraph (a)(5)(i) of this section.

* * * * *

(3) *Analysis of samples*. Laboratories may use any quantitative method for analysis of *E. coli* that is approved as an AOAC Official Method of the AOAC International (formerly the Association of Official Analytical Chemists)[2] or approved and published by a scientific body and based on the results of a collaborative trial conducted in accordance with an internationally recognized protocol on collaborative trials and compared against the three tube Most Probable Number (MPN) method and agreeing with the 95 percent upper and lower confidence limit of the appropriate MPN index.

(4) *Recording of test results*. The establishment shall maintain accurate records of all test results, in terms of CFU/ml of rinse fluid. Results shall be recorded onto a process control chart or table showing at least the most recent 13 test results, by type of poultry slaughtered. Records shall be retained at the establishment for a period of 12 months and shall be made available to FSIS upon request.

(5) *Criteria for evaluation of test results*.

(i) * * *

[1] A copy of FSIS's ''Sampling Technique for *E. coli* in Raw Meat and Poultry for Process Control Verification'' is available for inspection in the FSIS Docket Room.

[2] A copy of the current edition/revision of the ''Official Methods of AOAC International,'' 16th edition, 3rd revision, 1997, is on file with the Director, Office of the Federal Register, and may be purchased from the Association of Official Analytical Chemists International, Inc., 481 North Frederick Ave., Suite 500, Gaithersburg, MD 20877–2417.

TABLE 1.—EVALUATION OF E. COLI TEST RESULTS

Types of poultry	Lower limit of marginal range (m)	Upper limit of marginal range (M)	Number of sample tested (n)	Maximum number permitted in marginal range (c)
Chickens	100 CFU/ml	1,000 CFU/ml	13	3
Turkeys	N.A.[a]	N.A	N.A	N.A.

[a] Not available; values for turkeys will be added upon completion of data collection program for turkeys.

(ii) For types of poultry appearing in paragraph (a)(5)(i) Table 1 of this section that do not have m/M criteria, establishments shall evaluate *E. coli* test results using statistical process control techniques.

* * * * *

PART 416—SANITATION

7. The authority citation for part 416 continues to reads as follows:

Authority: 21 U.S.C. 451–470, 601–695; 7 U.S.C. 450, 1901–1906; 7 CFR 2.18, 2.53.

8. Section 416.15 is amended by revising paragraph (b) to read as follows:

§ 416.15 Corrective Actions.

* * * * *

(b) Corrective actions include procedures to ensure appropriate disposition of product(s) that may be contaminated, restore sanitary conditions, and prevent the recurrence of direct contamination or adulteration of product(s), including appropriate reevaluation and modification of the Sanitation SOP's and the procedures specified therein or appropriate improvements in the execution of the Sanitation SOP's or the procedures specified therein.

Done at Washington, DC, on May 7, 1997.

Thomas J. Billy,

Administrator.

[FR Doc. 97–12397 Filed 5–7–97; 3:21 pm]

BILLING CODE 3410–DM–P

NUCLEAR REGULATORY COMMISSION

10 CFR Part 2

RIN 3150–AF68

Informal Small Entity Guidance

AGENCY: Nuclear Regulatory Commission.

ACTION: Final rule.

SUMMARY: The Nuclear Regulatory Commission (NRC) is amending its regulations to add a provision that provides a method for small entities to contact the NRC for assistance in interpreting or complying with regulatory requirements. The final rule is necessary to comply with the Small Business Regulatory Enforcement Fairness Act. The final rule describes how the NRC will assist small entities that are licensed by the NRC.

EFFECTIVE DATE: May 13, 1997.

FOR FURTHER INFORMATION CONTACT: David L. Meyer, Chief, Rules Review and Directives Branch, Office of Administration, Washington, DC 20555–0001; telephone 301–415–7162; Web address http://www.dlm1@nrc.gov, or Michael T. Lesar, Chief, Rules Review Section, Rules Review and Directives Branch, Office of Administration, Washington, DC 20555–0001; telephone 301–415–7163; Web address http://www.mtl@nrc.gov. Small businesses can obtain information from the Commission's hotline telephone system by calling 1–800–368–5642.

SUPPLEMENTARY INFORMATION:

Background

In March 1996, Congress enacted the Small Business Regulatory Enforcement Fairness Act (SBREFA), Public Law 104–121. Congress found this legislation necessary because ''small businesses bear a disproportionate share of regulatory costs and burden'' and ''fundamental changes * * * are needed in the regulatory and enforcement culture of Federal agencies' to make them more responsive to small businesses (Sections 202 (2) and (3) of the Act).

Simplifying Compliance

Subtitle A of SBREFA provides a number of initiatives that are intended to make it easier for small entities to understand and comply with agency regulations. In particular, the subtitle provides that, ''Whenever appropriate in the interest of administering statutes and regulations within the jurisdiction of an agency, it shall be the practice of the agency to answer inquiries from small entities concerning information on and advice about compliance with such statutes and regulations.'' Agencies are expected to interpret and apply the law, or regulations implementing the law, to specific sets of facts that are supplied by the small entity. Furthermore, agencies are required to establish a program to receive and respond to these types of inquiries.

The NRC and Small Entities

Since the Regulatory Flexibility Act was enacted in 1980, the NRC has considered the special needs of small businesses and has worked to address them. In 1983, the NRC surveyed its materials licensees to create an economic profile sufficient to consider regulatory alternatives tailored to the size of the licensee. After analyzing the data and consulting with the Small Business Administration (SBA), the NRC developed size standards to determine which of its licensees would qualify as small entities for the purposes of compliance with the Regulatory Flexibility Act (50 FR 50241; December 9, 1985).

In 1993, the NRC completed a second survey to update the economic profile of its materials licensees. Subsequently, the NRC revised its size standards on April 11, 1995 (60 FR 18344). The revised size standards included separate standards for business concerns that are manufacturing entities, adjusted its receipts-based size standard to accommodate inflation, eliminated the separate $1 million size standard for private-practice physicians and applied the revised receipts-based size standard of $5 million to this class of licensees, and codified the size standards in § 2.810 of 10 CFR. The NRC has considered the economic impact of its regulatory actions on small entities. In particular, the NRC used its size standards to tier the annual license fee imposed by the NRC's final rules implementing the Omnibus Budget Reconciliation Act of 1990 (56 FR 31472; July 10, 1991 and subsequent years), thereby reducing the impact of the fee rules on small entities.

In this and other areas, the NRC has responded to the comments and suggestions it has received from small entities. The NRC intends to continue

and improve its responsiveness to the questions and concerns of small entities. This regulation establishes a means for small entities to contact the NRC to receive the type of informal compliance assistance contemplated by SBREFA.

Administrative Procedure Act Waiver

Generally, the Administrative Procedure Act (APA) requires agencies to publish a notice of proposed rulemaking and provide opportunity for public comment before issuing a rule. 5 U.S.C. 553. However, these requirements do not apply when the agency finds that they are amendments dealing with agency practice and procedure. 5 U.S.C. 553 (b)(3)(A). The Commission finds for good cause that notice of proposed rulemaking and public participation are unnecessary because the rule is a matter of agency practice; e.g., the establishment of a telephone number to facilitate interaction with the small entities licensed by the Commission.

The rule shall be effective on May 13, 1997. The APA requires that a substantive rule be published at least 30 days before its effective date, unless the agency finds for good cause that such delay is not needed. 5 U.S.C. 553(d)(3). The Commission finds good cause for the rule issued below to become effective immediately because the amendments are of an administrative nature concerning a matter of agency conduct, the establishment of a telephone number to facilitate interaction with the small entities licensed by the Commission.

Environmental Impact: Categorical Exclusion

The NRC has determined that this final rule is the type of action described in categorical exclusion 10 CFR 51.22(c)(1). Therefore neither an environmental impact statement nor an environmental assessment has been prepared for this final rule.

Paperwork Reduction Act Statement

This final rule contains no information collection requirements and, therefore, is not subject to the requirements of the Paperwork Reduction Act of 1995 (44 U.S.C. 3501 *et seq.*).

List of Subjects in 10 CFR Part 2

Administrative practice and procedure, Antitrust, Byproduct material, Classified information, Environmental protection, Nuclear Materials, Nuclear power plants and reactors, Penalties, Sex discrimination, Source material, Special nuclear material, Waste treatment and disposal.

For the reasons set out in the preamble and under the authority of the Atomic Energy Act of 1954, as amended; the Energy Reorganization Act of 1974, as amended; the Small Business Regulatory Enforcement Fairness Act; and 5 U.S.C. 552 and 553, the NRC is adopting the following amendment to 10 CFR Part 2.

PART 2—RULES OF PRACTICE FOR DOMESTIC LICENSING PROCEEDINGS AND ISSUANCE OF ORDERS

1. The authority citation for Part 2 continues to read as follows:

Authority: Secs. 161, 181, 68 Stat. 948, 953, as amended (42 U.S.C. 2201, 2231); sec. 191, as amended, Pub. L. 87–615, 76 Stat. 409 (42 U.S.C. 2241); sec. 201, 88 Stat. 1242, as amended (42 U.S.C. 5841); 5 U.S.C. 552.

Section 2.101 also issued under secs. 53, 62, 63, 81, 103, 104, 105, 68 Stat. 930, 932, 933, 935, 936, 937, 938, as amended (42 U.S.C. 2073, 2092, 2093, 2111, 2133, 2134, 2135); sec. 114(f), Pub. L. 97–425, 96 Stat. 2213, as amended (42 U.S.C. 10134(f)); sec. 102, Pub. L. 91–190, 83 Stat. 853, as amended (42 U.S.C. 4332); sec. 301, 88 Stat. 1248 (42 U.S.C. 5871). Sections 2.102, 2.103, 2.104, 2.105, 2.721 also issued under secs. 102, 103, 104, 105, 183, 189, 68 Stat. 936, 937, 938, 954, 955, as amended (42 U.S.C. 2132, 2133, 2134, 2135, 2233, 2239). Section 2.105 also issued under Pub. L. 97–415, 96 Stat. 2073 (42 U.S.C. 2239). Sections 2.200–2.206 also issued under secs. 161b, i, o, 182, 186, 234, 68 Stat. 948–951, 955, 83 Stat. 444, as amended (42 U.S.C. 2201 (b), (i), (o), 2236, 2282); sec. 206, 88 Stat 1246 (42 U.S.C. 5846). Sections 2.600–2.606 also issued under sec. 102, Pub. L. 91–190, 83 Stat. 853, as amended (42 U.S.C. 4332). Sections 2.700a, 2.719 also issued under 5 U.S.C. 554. Sections 2.754, 2.760, 2.770, 2.780 also issued under 5 U.S.C. 557. Section 2.764 and Table 1A of Appendix C also issued under secs. 135, 141, Pub. L. 97–425, 96 Stat. 2232, 2241 (42 U.S.C. 10155, 10161). Section 2.790 also issued under sec. 103, 68 Stat. 936, as amended (42 U.S.C. 2133) and 5 U.S.C. 552. Sections 2.800 and 2.808 also issued under 5 U.S.C. 553. Section 2.809 also issued under 5 U.S.C. 553 and sec. 29, Pub. L. 85–256, 71 Stat. 579, as amended (42 U.S.C. 2039). Subpart K also issued under sec. 189, 68 Stat. 955 (42 U.S.C. 2239); sec. 134, Pub. L. 97–425, 96 Stat. 2230 (42 U.S.C. 10154). Subpart L also issued under sec. 189, 68 Stat. 955 (42 U.S.C. 2239). Appendix A also issued under sec. 6, Pub. L. 91–560, 84 Stat. 1473 (42 U.S.C. 2135). Appendix B also issued under sec. 10, Pub. L. 99–240, 99 Stat. 1842 (42 U.S.C. 2021b *et seq.*).

2. In § 2.810, paragraph (f) is added to read as follows:

§ 2.810 NRC size standards.

* * * * *

(f) Whenever appropriate in the interest of administering statutes and regulations within its jurisdiction, it is the practice of the NRC to answer inquiries from small entities concerning information on and advice about compliance with the statutes and regulations that affect them. To help small entities obtain information quickly, the NRC has established a toll-free telephone number at 1–800–368–5642.

Dated at Rockville, Maryland, this 2nd day of May, 1997.

For the Nuclear Regulatory Commission.

L. Joseph Callan,

Executive Director for Operations.

[FR Doc. 97–12468 Filed 5–12–97; 8:45 am]

BILLING CODE 7590–01–P

FEDERAL RESERVE SYSTEM

12 CFR Part 229

[Reg. CC; Docket No. R–0970]

Availability of Funds and Collection of Checks

AGENCY: Board of Governors of the Federal Reserve System.

ACTION: Final rule; technical amendment.

SUMMARY: The Board is publishing technical amendments to Appendix A of Regulation CC. The amendments will conform Appendix A to a realignment in Federal Reserve check-processing regions by adding the First District routing numbers formerly assigned to the Lewiston check-processing region to the Boston Head Office.

EFFECTIVE DATE: October 27, 1997.

FOR FURTHER INFORMATION CONTACT: Stephanie Martin, Senior Attorney (202/452–3198), or Heatherun Allison, Attorney (202/452–3565), Legal Division. For the hearing impaired *only*: Telecommunications Device for the Deaf, Diane Jenkins (202/452–3544).

SUPPLEMENTARY INFORMATION: The Board's Regulation CC (12 CFR part 229) implements the Expedited Funds Availability Act (12 U.S.C. 4001 *et seq.*) (the Act) and requires banks,[1] *inter alia*, to make funds deposited into transaction accounts available for withdrawal within specified time frames. The Act and regulation allow banks to place longer holds on nonlocal checks than on local checks. A nonlocal check is one for which the paying bank[2] is located in a different check-processing region than the depositary bank. Regulation CC defines ''check-

[1] The term *bank* refers to any depository institution, including commercial banks, savings institutions, and credit unions.

[2] The *paying bank* is the bank by, at, or through which a check is payable. The *depositary bank* is the first bank to which a check is transferred.

processing region'' as ''the geographical area served by an office of a Federal Reserve Bank for purposes of its check-processing activities.''[3] Appendix A of Regulation CC lists the Federal Reserve check-processing offices and the 4-digit routing number prefixes that are local to each office.

Effective October 27, 1997, the Federal Reserve Bank of Boston will discontinue processing checks at its Lewiston, Maine, regional check-processing center and incorporate the Lewiston check-processing region into its Head Office check-processing region. This consolidation results from the determination by the Federal Reserve Bank of Boston that it can process the majority of checks handled by the Lewiston check-processing region more efficiently and cost-effectively through its Head Office. Accordingly, the Board has revised the routing number list in Appendix A to reflect the Lewiston-Head Office consolidation, effective October 27, 1997.

Although the substance of Regulation CC will be unaffected by the amendments to Appendix A, the consolidation of check-processing regions may require some banks to adjust their internal procedures for assigning funds availability. For example, checks deposited in the former Lewiston region will now be considered local checks in the Head Office region (and vice versa). Banks that now distinguish between the Lewiston and Head Office regions in assigning availability will need to realign their internal operating systems to reflect the consolidation. These banks also will need to reflect any availability policy changes in their disclosures, as the availability for certain checks may be improved. Section 229.18(e) of Regulation CC provides that, in the case of an availability policy change that expedites the availability of funds, a bank shall send a notice of the change to holders of consumer accounts not later than 30 days after implementation.

The amendments adopted by the Board are technical amendments that reflect the realignment of Federal Reserve check-processing regions and are required by the statutory and regulatory definitions of ''check-processing region.'' Accordingly, 5 U.S.C. 553(b), requiring public comment, does not apply.

Final Regulatory Flexibility Analysis

The amendment will apply to all banks, regardless of size. There is no possible alternative rule for small banks, as ''check-processing region'' is defined by the Expedited Funds Availability Act, which applies to all banks. The amendment will affect only those banks in the First District in the current Lewiston and Head Office check-processing regions that distinguish between checks drawn on paying banks located in those two regions for purposes of assigning availability. The Board expects that the majority of small institutions located in those two regions will be unaffected by the amendment.

List of Subjects in 12 CFR Part 229

Banks, banking, Federal Reserve System, Reporting and recordkeeping requirements.

For the reasons set out in the preamble, 12 CFR part 229 is amended as follows:

1. The authority citation for part 229 continues to read as follows:

Authority: 12 U.S.C. 4001 *et seq.*

Appendix A to Part 229 [Amended]

2. In Appendix A to part 229, under the heading ''FIRST FEDERAL RESERVE DISTRICT,'' the numbers appearing directly under the subheading *''Lewiston Office''* are transferred in numerical order under the subheading *''Head Office''*, and the subheading *''Lewiston Office''* is removed.

By order of the Board of Governors of the Federal Reserve System, May 7, 1997.

William W. Wiles,

Secretary of the Board.

[FR Doc. 97–12442 Filed 5–12–97; 8:45 am]

BILLING CODE 6210–01–P

[3] 12 CFR 229.2(m). The Act's definition is substantially similar (12 U.S.C. 4001(9)).

DEPARTMENT OF TRANSPORTATION

Federal Aviation Administration

14 CFR Part 39

[Docket No. 95–CE–100–AD; Amendment 39–10022; AD 97–10–10]

RIN 2120–AA64

Airworthiness Directives; Aerospace Technologies of Australia, Nomad N22 and N24 Series Airplanes

AGENCY: Federal Aviation Administration, DOT.

ACTION: Final rule.

SUMMARY: This amendment supersedes AirworthinessDirective AD 85–21–06 which applies to all AerospaceTechnologies of Australia (ASTA) Nomad N22 and N24 series airplanes and currently requires replacing the attachment fittings of the upper fin rear spar and the fin/horizontal stabilizer. This action requires removing the upper fin to stub fin forward attachment bolts, inspecting the attachment fittings for cracks, and, if no cracks are found, replacing the attachment bolts with bolts of improved design until the life limit of the attachment fittings is reached, at which time the attachment fittings would be replaced with improved attachment fittings. If cracks are found, this AD requires replacing the attachment bolts and attachment fittings. Cracks found in the underhead radius and at the base of the thread of the bolt prompted this action. The actions specified by thisAD are intended to prevent cracking in the upper fin and horizontal stabilizer attachment fittings, which if not corrected, could result in loss of control of the airplane.

DATES: Effective July 3, 1997.

The incorporation by reference of certain publications listed in the regulations is approved by the Director of the Federal Register as of July 3, 1997.

ADDRESSES: Service information that applies to this AD may be obtained from AeroSpace Technologies ofAustralia, Limited, ASTA DEFENCE, Private Bag No. 4,Beach Road Lara 3212, Victoria, Australia. This information may also be examined at the FederalAviation Administration (FAA), Central Region, Office of the Assistant Chief Counsel, Attention: RulesDocket 95–CE–100–AD, Room 1558, 601 E. 12th Street,Kansas City, Missouri 64106; or at the Office of theFederal Register, 800 North Capitol Street, NW., suite 700, Washington, DC.

FOR FURTHER INFORMATION CONTACT: Mr. Ron Atmur,Aerospace Engineer, Los Angeles Aircraft CertificationOffice, FAA, 3960 Paramount Blvd., Lakewood,California, 90712; telephone (562) 627–5224; facsimile(562) 627–5210.

SUPPLEMENTARY INFORMATION:

Events Leading to the Issuance of This AD

A proposal to amend part 39 of the Federal Aviation Regulations (14 CFR part 39) to include an AD that would apply to ASTA Nomad N22 and N24 series airplanes was published in the **Federal Register** onDecember 5, 1996 (61 FR 64489). The action proposed to require removing the attachment bolt, part number (P/N) 2/N–00–43, and inspecting the attachment fitting for cracks using a dye penetrant method. If no cracks are found, the AD would require replacing the bolt with a new bolt, P/N 3/N–00–43, and replacing the attachment fittings (P/N 1/N–12–48, left, and 1/N–12–49, right) with attachment fittings of improved design (P/N 1/N–12–375, left, and 1/N–12–376, right). If

cracks are found, the action would require replacing the attachment bolts and attachment fittings at the time of inspection and prior to further flight. The FAA did not include the part numbers of the improved design attachment fittings in the published NPRM, but has decided to include the part numbers of the old attachment fittings and the improved attachment fittings in this Final Rule action for clarity.

Accomplishment of the proposed action would be in accordance with Nomad Alert Service Bulletin ANMD 55–23, Revision 1, dated July 11, 1991 and Nomad ServiceBulletin (SB) NMD–53–5, Rev. 2, dated December 6, 1995.

Interested persons have been afforded an opportunity to participate in the making of this amendment. No comments were received on the proposed rule or the FAA's determination of the cost to the public.

The FAA's Determination

After careful review of all available information related to the subject presented above, the FAA has determined that air safety and the public interest require the adoption of the rule as proposed except for minor editorial corrections. The FAA has determined that these minor corrections will not change the meaning of the AD and will not add any additional burden upon the public than was already proposed.

Cost Impact

The FAA estimates that 15 airplanes in the U.S. registry will be affected by this AD, that it will take approximately 8 workhours per airplane to accomplish the inspection and bolt replacement, and that the average labor rate is approximately $60 an hour. Parts cost approximately $236 per airplane. Based on these figures, the total cost impact of this AD on U.S. operators is estimated to be $10,740 or $716 per airplane. The cost of replacing the attachment fittings is not included in these figures because AD 85–21–06 previously accounted for the cost of the attachment fitting replacement.

Regulatory Impact

The regulations adopted herein will not have substantial direct effects on the States, on the relationship between the national government and the States, or on the distribution of power and responsibilities among the various levels of government. Therefore, in accordance with Executive Order 12612, it is determined that this final rule does not have sufficient federalism implications to warrant the preparation of a Federalism Assessment.

For the reasons discussed above, I certify that this action (1) Is not a ''significant regulatory action'' under Executive Order 12866; (2) is not a ''significant rule'' under DOT Regulatory Policies and Procedures (44 FR 11034, February 26, 1979); and (3) will not have a significant economic impact, positive or negative, on a substantial number of small entities under the criteria of the Regulatory Flexibility Act. A copy of the final evaluation prepared for this action is contained in the Rules Docket. A copy of it may be obtained by contacting the Rules Docket at the location provided under the caption **ADDRESSES**.

List of Subjects in 14 CFR Part 39

Air transportation, Aircraft, Aviation safety, Incorporation by reference, Safety.

Adoption of the Amendment

Accordingly, pursuant to the authority delegated to me by the Administrator, the Federal Aviation Administration amends part 39 of the Federal Aviation Regulations (14 CFR part 39) as follows:

PART 39—AIRWORTHINESS DIRECTIVES

1. The authority citation for part 39 continues to read as follows:

Authority: 49 U.S.C. 106(g), 40113, 44701.

§ 39.13 [Amended]

2. Section 39.13 is amended by removing airworthiness directive (AD) 85–21–06, Amendment 39–5152 and by adding a new AD to read as follows:

97–10–10 Aerospace Technologies of Australia (ASTA): Amendment No. 39–10022; Docket No. 95–CE–100–AD; Supersedes AD 85–21–06, Amendment 39–5152.

Applicability: Nomad N22 and N24 series airplanes, all serial numbers, that are not equipped with attachment fitting part numbers (P/N) 1/N–12–375 (left) and 1/N–12–376 (right), certificated in any category.

Note 1: This AD applies to each airplane identified in the preceding applicability provision, regardless of whether it has been modified, altered, or repaired in the area subject to the requirements of this AD. For airplanes that have been modified, altered, or repaired so that the performance of the requirements of this AD is affected, the owner/operator must request approval for an alternative method of compliance in accordance with paragraph (d) of this AD. The request should include an assessment of the effect of the modification, alteration, or repair on the unsafe condition addressed by this AD; and, if the unsafe condition has not been eliminated, the request should include specific proposed actions to address it.

Compliance: Required as indicated in the body of this AD, unless already accomplished.

To prevent cracking in the upper fin and horizontal stabilizer attachment fittings, which if not detected and corrected, could result in loss of control of the airplane, accomplish the following:

(a) Within the next 100 hours time-in-service (TIS) after the effective date of this AD, remove the attachment bolt (P/N 2/N–00–43, qty 2) and inspect the attachment bolt, vertical fin attachment fittings, and fin/horizontal stabilizer fittings for cracks, using a dye penetrant method, in accordance with the Accomplishment instructions section in Nomad Alert Service Bulletin (ASB) ANMD–55–23, Revision 1, dated July 11, 1991.

(1) If no cracks are found, prior to further flight, replace the attachment bolts (P/N 2/N–00–43, qty 2) with new attachment bolts (P/N 3/N–00–43, qty 2) in accordance with the ACCOMPLISHMENT INSTRUCTIONS section in Nomad ASB ANMD–55–23, Revision 1, dated July 11, 1991.

(2) If cracks are found, prior to further flight, replace the attachment bolts in accordance with the ACCOMPLISHMENT INSTRUCTIONS section in Nomad ASB 55–23, Revision 1, dated July 11, 1991, and replace the vertical fin attachment fittings and fin/horizontal stabilizer fittings with fittings of improved design (P/N 1/N–12–375, left, and 1/N–12–376, right) in accordance with Nomad Service Bulletin (SB) NMD–53–5, Revision 2, dated December 6, 1995.

(b) Upon the accumulation of 3,000 hours total TIS or within the next 50 hours TIS after the initial inspection required in paragraph (a) of this AD, whichever occurs later, unless previously accomplished in accordance with paragraph (a)(2) of this AD, replace the vertical fin attachment fittings and the fin/horizontal stabilizer fittings with attachment fittings of improved design (P/N 1/N–12–375, left, and 1/N–12–376, right) in accordance with the ACCOMPLISHMENT INSTRUCTIONS section in Nomad SB NMD–53–5, Revision 2, dated December 6, 1995.

(c) Special flight permits may be issued in accordance with sections 21.197 and 21.199 of the Federal Aviation Regulations (14 CFR 21.197 and 21.199) to operate the airplane to a location where the requirements of this AD can be accomplished.

(d) An alternative method of compliance or adjustment of the compliance times that provides an equivalent level of safety may be approved by the Manager, Los Angeles Aircraft Certification Office, FAA, 3960 Paramount Blvd., Lakewood, California, 90712; telephone (310) 627–5224; facsimile (310) 627–5210. The request shall be forwarded through an appropriate FAA Maintenance Inspector, who may add comments and then send it to the Manager, Los Angeles Aircraft Certification Office.

Note 2: Information concerning the existence of approved alternative methods of compliance with this AD, if any, may be obtained from Los Angeles Aircraft Certification Office.

(e) The inspection, modification, and replacements required by this AD shall be done in accordance with ASTA Nomad Alert Service Bulletin ANMD–55–23, Rev. 1, dated

July 11, 1991 and ASTA Nomad Service Bulletin NMD–53–5, Rev. 2, dated December 6, 1995. This incorporation by reference was approved by the Director of the Federal Register in accordance with 5 U.S.C. 552(a) and 1 CFR part 51. Copies may be obtained from AeroSpace Technologies of Australia, Limited, ASTA DEFENCE, Private Bag No. 4, Beach Road Lara 3212, Victoria, Australia. Copies may be inspected at the FAA, Central Region, Office of the Assistant Chief Counsel, Room 1558, 601 E. 12th Street, Kansas City, Missouri, or at the Office of the Federal Register, 800 North Capitol Street, NW., suite 700, Washington, DC.

(f) This Amendment supersedes AD 85–21–06, Amendment 39–5152.

(g) This Amendment (39–10022) becomes effective on July 3, 1997.

Issued in Kansas City, Missouri, on May 1, 1995.

Michael Gallagher,

Manager, Small Airplane Directorate, Aircraft Certification Service.

[FR Doc. 97–12246 Filed 5–12–97; 8:45 am]

BILLING CODE 4910–13–U

DEPARTMENT OF TRANSPORTATION

Federal Aviation Administration

14 CFR Part 39

[Docket No. 96–CE–65–AD; Amendment 39–10025; AD 97–10–13]

RIN 2120–AA64

Airworthiness Directives; Fairchild Aircraft, Inc. SA226 and SA227 Series Airplanes

AGENCY: Federal Aviation Administration, DOT.

ACTION: Final rule.

SUMMARY: This amendment supersedes Airworthiness Directive (AD) 96–21–05, which currently requires the following on certain Fairchild Aircraft, Inc. (Fairchild) SA226 and SA227 series airplanes that do not have a certain elevator torque tube installed: drilling inspection access holes in the elevator torque tube arm, inspecting the elevator torque tube for corrosion, replacing any corroded elevator torque tube, and applying a corrosion preventive compound. AD 96–21–05 resulted from several reports of corrosion found in the elevator torque tube area on the affected airplanes. This AD retains the actions required by AD 96–21–05, and adds certain Fairchild Model SA227–BC airplanes to the Applicability section of that AD. The actions specified by this AD are intended to prevent failure of the flight control system caused by a corroded elevator torque tube, which could result in loss of control of the airplane.

DATES: Effective July 8, 1997.

The incorporation by reference of certain publications listed in the regulations was previously approved as of November 29, 1996 (61 FR 54538, October 21, 1996).

ADDRESSES: Service information that applies to this AD may be obtained from Fairchild Aircraft, Inc., P.O. Box 790490, San Antonio, Texas 78279–0490. This information may also be examined at the Federal Aviation Administration (FAA), Central Region, Office of the Assistant Chief Counsel, Attention: Rules Docket No. 96–CE–65–AD, Room 1558, 601 E. 12th Street, Kansas City, Missouri 64106; or at the Office of the Federal Register, 800 North Capitol Street, NW., suite 700, Washington, DC.

FOR FURTHER INFORMATION CONTACT: Mr. Hung Viet Nguyen, Aerospace Engineer, FAA, Airplane Certification Office, 2601 Meacham Boulevard, Fort Worth, Texas 76193–0150; Telephone (817) 222–5155; facsimile (817) 222–5960.

SUPPLEMENTARY INFORMATION:

Events Leading to the Issuance of This AD

A proposal to amend part 39 of the Federal Aviation Regulations (14 CFR part 39) to include an AD that would apply to certain Fairchild SA226 and SA227 series airplanes was published in the **Federal Register** as a notice of proposed rulemaking (NPRM) on January 29, 1997 (62 FR 4203). The action proposed to supersede AD 96–21–05 with a new AD that would (1) retain the requirements of drilling inspection access holes in the elevator torque tube arm, inspecting the elevator torque tube for corrosion and replacing any corroded elevator torque tube, and applying a corrosion preventive compound; (2) add certain Fairchild Model SA227–BC airplanes to the Applicability section of the AD; and (3) exempt from the AD those airplanes incorporating an elevator torque tube with either P/N 27–44026–005, P/N 27–44026–007, or P/N 27–44026–SEO–1–03. Accomplishment of the proposed inspection access hole drilling, the inspection, and the corrosion preventive compound application as specified in the NPRM would be in accordance with either Fairchild Aircraft Service Bulletin (SB) 226–27–050 or Fairchild Aircraft SB 227–27–028, both Issued: January 22, 1990.

A Fairchild engineering order provides the instructions for reworking the elevator torque tube that, when incorporated, is identified as P/N 27–44026–SEO–1–03. Also, the P/N 27–44026–007 elevator torque tube is not referenced in the service information. The FAA has determined that airplanes with this elevator torque tube installed are exempt from the actions of this AD, as well as those airplanes incorporating P/N 27–44026–005 or P/N 27–44026–SEO–1–03.

Interested persons have been afforded an opportunity to participate in the making of this amendment. One comment was received in support of the proposal and no comments were received on the FAA's determination of the cost to the public.

The FAA's Determination

After careful review of all available information related to the subject presented above, the FAA has determined that air safety and the public interest require the adoption of the rule as proposed except for minor editorial corrections. The FAA has determined that these minor corrections will not change the meaning of the AD and will not add any additional burden upon the public than was already proposed.

Compliance Time of the AD

The compliance time for this AD is presented in calendar time instead of hours time-in-service (TIS). The FAA has determined that a calendar time for compliance would be the most desirable method because the unsafe condition described by this AD is caused by corrosion. Corrosion can occur on airplanes regardless of whether the airplane is in service or on the ground.

Cost Impact

The FAA estimates that 396 airplanes in the U.S. registry will be affected by this AD, that it will take approximately 10 workhours per airplane to accomplish the required action, and that the average labor rate is approximately $60 an hour. Based on these figures, the total cost impact of the AD on U.S. operators is estimated to be $237,600. This figure is based on the presumption that no owner/operator of the affected airplanes has accomplished the required inspection access hole drilling, inspection, or corrosion preventive compound application. It also is based on the presumption that no elevator torque tube would be found corroded and need to be replaced.

AD 96–21–05 currently requires the same actions as this AD for 390 of the affected airplanes. The actions specified in this AD would affect only six additional airplanes over that already required by AD 96–21–05. With this in mind, the cost impact of this AD over that already required by AD 96–21–05 would be $3,600.

Regulatory Impact

The regulations adopted herein will not have substantial direct effects on the States, on the relationship between the national government and the States, or on the distribution of power and responsibilities among the various levels of government. Therefore, in accordance with Executive Order 12612, it is determined that this final rule does not have sufficient federalism implications to warrant the preparation of a Federalism Assessment.

For the reasons discussed above, I certify that this action (1) is not a ''significant regulatory action'' under Executive Order 12866; (2) is not a ''significant rule'' under DOT Regulatory Policies and Procedures (44 FR 11034, February 26, 1979); and (3) will not have a significant economic impact, positive or negative, on a substantial number of small entities under the criteria of the Regulatory Flexibility Act. A copy of the final evaluation prepared for this action is contained in the Rules Docket. A copy of it may be obtained by contacting the Rules Docket at the location provided under the caption **ADDRESSES**.

List of Subjects in 14 CFR Part 39

Air transportation, Aircraft, Aviation safety, Incorporation by reference, Safety.

Adoption of the Amendment

Accordingly, pursuant to the authority delegated to me by the Administrator, the Federal Aviation Administration amends part 39 of the Federal Aviation Regulations (14 CFR part 39) as follows:

PART 39—AIRWORTHINESS DIRECTIVES

1. The authority citation for part 39 continues to read as follows:

Authority: 49 U.S.C. 106(g), 40113, 44701.

§ 39.13 [Amended]

2. Section 39.13 is amended by removing Airworthiness Directive (AD) 96–21–05, Amendment 39–9782 (61 FR 54538, October 21, 1996), and by adding a new AD to read as follows:

97–10–13 Fairchild Aircraft, Inc.: Amendment 39–10025; Docket No. 96–CE–65–AD. Supersedes AD 96–21–05, Amendment 39–9782.

Applicability: The following airplane models and serial numbers, certificated in any category, that do not incorporate an elevator torque tube with either part number (P/N) 27–44026–005, P/N 27–44026–007, or P/N 27–44026–SEO–1–03:

Model	Serial Nos.
SA226–T	T201 through T275 and T277 through T291.
SA226–T(B)	T(B)276 and T(B)292 through T(B)417.
SA226–AT	AT001 through AT074.
SA226–TC ...	TC201 through TC419.
SA227–TT	TT421 through TT541.
SA227–AT	AT423 through AT695.
SA227–AC ...	AC406, AC415, AC416, and AC420 through AC772.
SA227–BC ...	BC762, BC764, BC766, BC770, BC771, and BC772.

Note 1: This AD applies to each airplane identified in the preceding applicability provision, regardless of whether it has been modified, altered, or repaired in the area subject to the requirements of this AD. For airplanes that have been modified, altered, or repaired so that the performance of the requirements of this AD is affected, the owner/operator must request approval for an alternative method of compliance in accordance with paragraph (d) of this AD. The request should include an assessment of the effect of the modification, alteration, or repair on the unsafe condition addressed by this AD; and, if the unsafe condition has not been eliminated, the request should include specific proposed actions to address it.

Compliance: Required within the next 6 calendar months after the effective date of this AD, unless already accomplished (compliance with AD 96–21–05).

To prevent failure of the flight control system caused by a corroded elevator torque tube, which could result in loss of control of the airplane, accomplish the following:

(a) Drill two .5-inch diameter holes in the inboard side of the elevator torque tube arm in accordance with the ACCOMPLISHMENT INSTRUCTIONS section of, and as specified in Figure 1 of, Fairchild Aircraft Service Bulletin (SB) 226–27–050 or Fairchild Aircraft SB 227–27–028, both Issued: January 22, 1990, as applicable.

(b) Inspect the elevator torque tube in accordance with the ACCOMPLISHMENT INSTRUCTIONS section of Fairchild Aircraft SB 226–27–050 or Fairchild Aircraft SB 227–27–028, both Issued: January 22, 1990, as applicable.

(1) If corrosion is found inside the elevator torque tube, prior to further flight after the inspection required by paragraph (b) of this AD, replace the corroded elevator torque tube with either a P/N 27–44026–005, P/N 27–44026–007, or P/N 27–44026–SEO–1–03 elevator torque tube in accordance with the applicable maintenance manual.

(2) If corrosion is not found inside the elevator torque tube, prior to further flight after the inspection required by paragraph (b) of this AD, apply a corrosion preventive compound in accordance with the ACCOMPLISHMENT INSTRUCTIONS section of Fairchild Aircraft SB 226–27–050 or Fairchild Aircraft SB 227–27–028, both Issued: January 22, 1990, as applicable.

(c) Special flight permits may be issued in accordance with sections 21.197 and 21.199 of the Federal Aviation Regulations (14 CFR 21.197 and 21.199) to operate the airplane to a location where the requirements of this AD can be accomplished.

(d) An alternative method of compliance or adjustment of the compliance time that provides an equivalent level of safety may be approved by the Manager, Airplane Certification Office (ACO), FAA, 2601 Meacham Boulevard, Fort Worth, Texas 76193–0150. The request shall be forwarded through an appropriate FAA Maintenance Inspector, who may add comments and then send it to the Manager, Fort Worth ACO. Alternative methods of compliance approved in accordance with AD 96–21–05 (superseded by this AD) are considered approved for this AD.

Note 2: Information concerning the existence of approved alternative methods of compliance with this AD, if any, may be obtained from the Fort Worth ACO.

(e) The inspection access hole drilling, the inspection, and the corrosion preventive compound application required by this AD shall be done in accordance with Fairchild Aircraft SB 226–27–050 or Fairchild Aircraft SB 227–27–028, both Issued: January 22, 1990, as applicable. This incorporation by reference was previously approved by the Director of the Federal Register in accordance with 5 U.S.C. 552(a) and 1 CFR part 51, as of November 29, 1996 (61 FR 54538, October 21, 1996). Copies may be obtained Fairchild Aircraft, P.O. Box 790490, San Antonio, Texas 78279–0490. Copies may be inspected at the FAA, Central Region, Office of the Assistant Chief Counsel, Room 1558, 601 E. 12th Street, Kansas City, Missouri, or at the Office of the Federal Register, 800 North Capitol Street, NW., suite 700, Washington, DC.

(f) This amendment (39–10025) supersedes AD 96–21–05, mendment 39–9782.

(g) This amendment (39–10025) becomes effective on July 8, 1997.

Issued in Kansas City, Missouri, on May 7, 1997.

Henry A. Armstrong,

Acting Manager, Small Airplane Directorate, Aircraft Certification Service.

[FR Doc. 97–12517 Filed 5–12–97; 8:45 am]

BILLING CODE 4910–13–U

DEPARTMENT OF TRANSPORTATION

Federal Aviation Administration

14 CFR Part 71

[Airspace Docket No. 96–ACE–21]

Amendment to Class E Airspace Omaha, NE; Correction

AGENCY: Federal Aviation Administration (FAA), DOT.

ACTION: Final rule; correction.

SUMMARY: This action corrects an error in the geographic coordinates and airspace description of a final rule that was published in the **Federal Register** on January 31, 1997 (62 FR 4631), Airspace Docket No. 96–ACE–21. The

final rule modified the Class E airspace area at Omaha, NE.

EFFECTIVE DATE: 0901 UTC May 22, 1997.

FOR FURTHER INFORMATION CONTACT:

Kathy Randolph, Air Traffic Division, Operations Branch, ACE–530C, Federal Aviation Administration, 601 E. 12th Street, Kansas City, MO 64106; telephone (816) 426-3408.

SUPPLEMENTARY INFORMATION:

History

Federal Register Document 97–2419, Airspace Docket No. 96–ACE–21, published on January 31, 1997 (62 FR 4631), revised the descriptions of the Class E airspace area at Omaha, NE. A typographical error was discovered in the geographic coordinates. In addition, the Class E airspace area description is revised to remove the phrase ''excluding that portion which lies within the Eppley Airfield and Offutt AFB Class E5 airspace''. This action corrects those errors.

Correction to Final Rule

§ 71.1 [Corrected]

Accordingly, pursuant to the authority delegated to me, on page 4632, column 2, § 71.1, the geographic coordinates and airspace description of the Class E airspace area at Omaha, NE, as published in the **Federal Register** on January 31, 1997 (62 FR 4631) (**Federal Register** Document 97–2419) are corrected to read as follows:

ACE NE E5 Omaha, NE [Corrected]

Eppley Airfield, NE
(Lat 41°18′09″ N., long. 95°53′39″ W.)
Offutt AFB, NE
(Lat. 41°07′06″ N. long. 95°54′45″ W.)
Council Bluffs Municipal Airport, IA
(Lat 41°15′34″ N., long. 95°45′36″ W.)

That airspace extending upward from 700 feet above the surface within a 6.9-mile radius of the Eppley Airfield and within 3 miles each side of the Eppley Airfield ILS localizer course to Runway 14R extending from the 6.9-mile radius to 12 miles northwest of the airport and within a 7-mile radius of Offutt AFB and within 4.3 miles each side of the Offutt ILS localizer course extending from the 7-mile radius to 7.4 miles southeast of the AFB and within a 6.3-miles radius of the Council Bluffs Municipal Airport.

* * * * *

Issued in Kansas City, MO on March 18, 1997.

Herman J. Lyons, Jr.,

Manager, Air Traffic Division, Central Region.

[FR Doc. 97–12239 Filed 5–12–97; 8:45 am]

BILLING CODE 4910–13–M

DEPARTMENT OF HEALTH AND HUMAN SERVICES

Food and Drug Administration

21 CFR Part 172

[Docket No. 87G–0351]

Food Additives Permitted for Direct Addition to Food for Human Consumption; 1,3-Butylene Glycol

AGENCY: Food and Drug Administration, HHS.

ACTION: Final rule.

SUMMARY: The Food and Drug Administration (FDA) is amending the food additive regulations to provide for the safe use of 1,3-butylene glycol as a formulation and processing aid in the manufacture of edible sausage casings. This action is in response to a petition filed by Teepak, Inc.

DATES: Effective May 13, 1997; written objections and requests for a hearing by June 12, 1997. The Director of the Office of the Federal Register approves the incorporation by reference in accordance with 5 U.S.C. 552(a) and 1 CFR part 51 of a certain publication listed in new § 172.712, effective May 13, 1997.

ADDRESSES: Submit written objections to the Dockets Management Branch (HFA–305), Food and Drug Administration, 12420 Parklawn Dr., rm. 1–23, Rockville, MD 20857.

FOR FURTHER INFORMATION CONTACT: James C. Wallwork, Center for Food Safety and Applied Nutrition (HFS–215), Food and Drug Administration, 200 C St. SW., Washington, DC 20204–0001, 202–418–3078.

SUPPLEMENTARY INFORMATION:

I. Background

In accordance with the procedures described in § 170.35 (21 CFR 170.35), Teepak, Inc., 915 North Michigan Ave., Danville, IL 61832–0597, submitted a petition (GRASP 7G0332) requesting that 1,3-butylene glycol be affirmed as generally recognized as safe (GRAS) for use in food as a formulation and processing aid, when used in accordance with current good manufacturing practice.

FDA published a notice of filing of this petition in the **Federal Register** of November 23, 1987 (52 FR 44936), and gave interested parties an opportunity to submit comments concerning the petition to the Dockets Management Branch (address above). FDA received no comments in response to that notice.

After the petition was filed, the petitioner amended the petition to limit the scope of the requested GRAS affirmation. As amended, the petition asks FDA to affirm 1,3-butylene glycol as GRAS for use only as a formulation and processing aid in the manufacture of edible sausage casings.

II. Standard for Evaluation of Petition

Under § 170.30 (21 CFR 170.30), general recognition of safety may be based only on the views of experts qualified by scientific training and experience to evaluate the safety of substances added to food. The basis of such views may be either: (1) Scientific procedures, or (2) in the case of a substance used in food prior to January 1, 1958, experience based on common use in food (§ 170.30(a)). General recognition of safety based upon scientific procedures requires the same quantity and quality of scientific evidence as is required to obtain approval of the substance as a food additive and ordinarily is to be based upon published studies, which may be corroborated by unpublished studies and other data and information (§ 170.30(b)). In its petition, Teepak, Inc., has not claimed a history of common use in food before 1958, but rather has relied upon scientific procedures, primarily published scientific papers, to support its claim that 1,3-butylene glycol is GRAS.

In reviewing the data in the petition and other relevant material, FDA noted that the published studies on the safety of 1,3-butylene glycol are of varying quality. As discussed in section IV. of this document, the agency believes that the available data, taken together, establish the safety of 1,3-butylene glycol for the limited use requested in the petition. However, FDA does not believe that the data are sufficient to show that the basis for such a safety determination is generally recognized by experts in the field.

Thus, in accordance with 21 CFR 170.35(c)(5) and 170.38, the agency has determined that the requested use of 1,3-butylene glycol cannot be considered GRAS based upon scientific procedures and that the compound is a food additive subject to section 409 of the Federal Food, Drug, and Cosmetic Act (the act) (21 U.S.C. 348). FDA notified the petitioner of this conclusion and the firm agreed that 1,3-butylene glycol could be evaluated as a food additive rather than as a GRAS ingredient.

III. Introduction

A. Identity

1,3-Butylene glycol ($CH_2OHCH_2CHOHCH_3$, CAS Reg. No.

107–88–0, and molecular weight 90.12) is the common name for 1,3-dihydroxybutane or 1,3-butanediol. It is a clear, colorless, hygroscopic, viscous liquid almost without odor.

B. Regulated Food and Packaging Uses

1,3-Butylene glycol is regulated for use under 21 CFR 173.220 *1,3-Butylene glycol* as a solvent for natural and synthetic flavoring substances, except where food standards preclude its use. Also, 1,3-butylene glycol is regulated for use in polyester formation under 21 CFR 175.320 *Resinous and polymeric coatings for polyolefin films* and as a reactant under 21 CFR 177.1680 *Polyurethane resins* in the preparation of resins for use in contact with dry bulk foods.

IV. Safety

A. Manufacturing Process

1,3-Butylene glycol is produced through the controlled aldol condensation of acetaldehyde in the presence of dilute aqueous sodium hydroxide. The first reaction product, a trimer of acetaldehyde, is decomposed to a dimer, acetaldol (3-hydroxy-butyraldehyde), during the neutralization of the excess sodium hydroxide with dilute acetic acid. The unreacted acetaldehyde is removed by distillation. Acetaldol is then reduced to butylene glycol by hydrogenation in the presence of a nickel catalyst. 1,3-Butylene glycol thus produced is purified in a series of vacuum distillation towers. The product is manufactured to conform to the identity and specifications listed in the monograph entitled ''1,3-Butylene Glycol'' in the Food Chemicals Codex, 4th ed. (1996), p. 52.

B. Proposed Use in Food

The petition contains data demonstrating that 1,3-butylene glycol is effective in reducing breakage in manufactured sausage casings. The petition also contains data demonstrating that the petitioned substance is most effective at levels of 5 to 15 percent of the liquid phase of the casing (equivalent to 2 to 6 percent of the total casing weight). Included in the petition are data demonstrating that at levels higher than 6 percent, 1,3-butylene glycol sausage casings become more susceptible to breakage. Thus, the petition provides data demonstrating that the proposed ingredient is technologically self-limiting.

C. Consumer Exposure

Using sausage intake data from the Market Research Corp. of America (Ref. 1) and assuming from information submitted with the petition that 1 percent of the weight of sausage is casing made with 6 percent 1,3-butylene glycol, FDA estimates that exposure to the proposed ingredient is 6.0 milligrams/person/day (mg/p/d) (mean) and 12 mg/p/d (90th percentile) for the 2+ years age group. For the 2- to 5-year-old age group subcategory, FDA estimates that exposure is 4.5 mg/p/d (mean) and 8.5 mg/p/d (90th percentile).

D. Toxicology

To provide evidence of the safety of 1,3-butylene glycol for the petitioned use, the petitioner provided published and unpublished reproduction and chronic feeding studies in rats and dogs, as well as a number of published short-term nutrition and metabolism studies. In addition, an agency-initiated literature search identified a reproduction study with 1,3-butylene glycol published in 1990.

A published 2-year dietary feeding study (Ref. 2) in beagle dogs reported no visible adverse effects on appearance, behavior, growth, food intake, urinalysis, hematology or serum biochemistry that could be attributed to treatment with 1,3-butylene glycol. The diets of male and female dogs were treated with the petitioned substance at 118, 228, and 613 mg/kilogram body weight/day (mg/kg bw/d) for males and 101, 228, and 732 mg/kg bw/d for females. Although microscopic lesions were observed in testes and lymph nodes of males after 1 and 2 years' treatment, FDA concludes that the lesions do not appear to be of pathological significance. Lesions of the type and severity observed are frequent incidental findings in dogs. Moreover, no significant difference in appearance between lesions in control and treated animals could be derived from the histopathological descriptions of the tissues examined. Therefore, the agency finds that the incidence of gross pathological lesions is unrelated to treatment and that this study supports a no-effect level of 700 mg/kg bw/d, the highest dose in the study.

The agency concludes that data from a published 2-year dietary feeding study (Ref. 2) in Sprague-Dawley rats cannot be used to establish the safety of 1,3-butylene glycol. The study had insufficient statistical power to detect an adverse response to 1,3-butylene glycol because an inadequate number of rats was used and widespread disease killed most of the rats during the second year of the study.

A published reproduction study (Ref. 3) in Long-Evans rats, treated by gavage with 1,3-butylene glycol (0, 706, 4,236, and 7,060 mg/kg bw/d) during days 6 to 15 of gestation, also reported no treatment-related effects on a variety of reproduction parameters (litter weight and size, crown-rump length, corpora lutea, implantation sites, sex distribution, intrauterine deaths, total malformed pups or incidence of litters with malformed pups). However, the researchers reported an increased incidence of low body weights and sternebral anomalies in pups from high-dose mothers, indicating a possible teratogenic effect from exposure to 1,3-butylene glycol. The full significance of the effects of the treatment of rats with 1,3-butylene glycol, though, cannot be determined from the available data. FDA finds that the data are insufficient to determine whether the observed anomalies were caused by the treatment-related reductions in birth weight or by a teratogenic effect of the additive. However, because the observed low body weights and sternebral anomalies occurred only in high-dose groups, the agency concludes that a no-effect level can be set from doses employed with mid-dose rats at 4,200 mg/kg bw/d.

A number of published and unpublished nutritional and metabolic studies with 1,3-butylene glycol were also provided (Refs. 4 through 21). Within the limited scope of those studies no significant toxicological effects were reported except in a human clinical study (Ref. 21). In that study, 1,3-butylene glycol fed to young male and female subjects (250 mg/kg bw/d in bread for four separate 7-day periods) was reported to significantly depress blood glucose (lowered by 12 percent relative to controls). The 1,3-butylene glycol-induced glucose reduction did not involve insulin or growth hormone, although its mechanism could not be determined. As discussed in section IV.D.1. of this section, the reduction in blood glucose would not be expected to occur at the low levels estimated for human dietary exposure from the proposed use of 1,3-butylene glycol.

Ordinarily, chronic studies in rodent and nonrodent species are needed to establish the safety of direct food ingredients (Ref. 22). Although the petitioner did not submit an acceptable chronic dietary rodent study, FDA concludes that the toxicological data submitted are adequate to establish the safety of the use of 1,3-butylene glycol in edible sausage casings, for the following reasons:

1. The metabolism of 1,3-butylene glycol is well understood. In the rat, 1,3-butylene glycol is metabolized in the liver cytosol in a manner similar to ethanol (Refs. 13 and 16). In the intact rat and in tissue slices, it is converted

to acetoacetate and β-hydroxybutyrate, which are normal intermediates in fat metabolism. In the kidney, 1,3-butylene glycol blocks gluconeogenesis at the conversion of 3-phosphoglycerate to glyceraldehyde-3-phosphate (Ref. 14). This metabolic blockage is responsible for the reduction in serum glucose that occurs when 1,3-butylene glycol is consumed at sufficiently high levels. At consumption levels that would be expected from the proposed use, however, 1,3-butylene glycol would not be expected to inhibit gluconeogenesis in the kidney. In addition, from an examination of the scientific literature on the metabolism of 1,3-butylene glycol, which is well understood and documented (Refs. 16 and 21), there is no indication that 1,3-butylene glycol would be expected to have any carcinogenic potential. Therefore, FDA concludes that a chronic rodent study is not necessary to support the safety of the proposed use of 1,3-butylene glycol.

2. To ensure an adequate margin of safety, FDA applied a 1,000-fold safety factor (rather than the normal 100-fold safety factor) to the no-effect level from the dog study (Ref. 2) to compensate for the lack of an acceptable chronic rodent study for 1,3-butylene glycol. Applying a 1,000-fold safety factor to the no-effect level from the dog study gives an acceptable daily intake (ADI) for 1,3-butylene glycol of 0.7 mg/kg bw. Although an adverse metabolic effect (decreased serum glucose) was reported in humans consuming 250 mg 1,3-butylene glycol/kg bw, it is unlikely that any such metabolic effects would be observed at the ADI, which is 350-fold lower. Furthermore, for 1,3-butylene glycol, the ADI (0.7 mg/kg bw) is greater than the daily exposure estimates of 0.1 mg/kg bw (mean) and 0.2 mg/kg bw (90th percentile) for adults, assuming a bw of 60 kg, and 0.3 mg/kg bw (mean) and 0.6 mg/kg bw (90th percentile) for 2- to 5-year-olds, assuming a body weight of 15 kg. Therefore, the agency concludes that the level of exposure resulting from the petitioned use of 1,3-butylene glycol is safe.

V. Conclusion on Safety

FDA has evaluated the data in the petition and other relevant material regarding the use of 1,3-butylene glycol as a formulation and processing aid in sausage casings and concludes that the substance produces the intended technical effects and is safe under the proposed conditions of use. Therefore, the agency is amending the food additive regulations to provide for the requested use.

In accordance with § 171.1(h) (21 CFR 171.1(h)), the petition and the documents that FDA considered and relied upon in reaching its decision to approve the petition are available for inspection at the Center for Food Safety and Applied Nutrition by appointment with the information contact person listed above. As provided in § 171.1(h), the agency will delete from the documents any materials that are not available for public disclosure before making the documents available for inspection.

VI. Environmental Impact

The agency has carefully considered the potential environmental effects of this action. FDA has concluded that the action will not have a significant impact on the human environment, and that an environmental impact statement is not required. The agency's finding of no significant impact and the evidence supporting that finding, contained in an environmental assessment, may be seen in the Dockets Management Branch (address above) between 9 a.m. and 4 p.m., Monday through Friday.

VII. Objections

Any person who will be adversely affected by this regulation may at any time on or before June 12, 1997, file with the Dockets Management Branch (address above) written objections thereto. Each objection shall be separately numbered, and each numbered objection shall specify with particularity the provisions of the regulation to which objection is made and the grounds for the objection. Each numbered objection on which a hearing is requested shall specifically so state. Failure to request a hearing for any particular objection shall constitute a waiver of the right to a hearing on that objection. Each numbered objection for which a hearing is requested shall include a detailed description and analysis of the specific factual information intended to be presented in support of the objection in the event that a hearing is held. Failure to include such a description and analysis for any particular objection shall constitute a waiver of the right to a hearing on the objection. Three copies of all documents shall be submitted and shall be identified with the docket number found in brackets in the heading of this document. Any objections received in response to the regulation may be seen in the Dockets Management Branch between 9 a.m. and 4 p.m., Monday through Friday.

VIII. References

The following references have been placed on display in the Dockets Management Branch (address above) and may be seen by interested persons between 9 a.m. and 4 p.m., Monday through Friday.

1. Memorandum from M. DiNovi, Chemistry Review Branch, to R. L. Martin, Direct Additives Branch, dated November 8, 1988.

2. Scala, R. A., and O. E. Paynter, ''Chronic Oral Toxicity of 1,3-Butanediol,'' *Toxicology and Applied Pharmacology*, 10:160–164, 1967.

3. Mankes, R. F., V. Renak, J. Fieseher, and R. LeFevre, ''Birthweight Depression in Male Rats Contiguous to Male Siblings in Utero Exposed to High Doses of 1,3-Butanediol During Organogenesis,'' *Journal of the American College of Toxicology*, 5:189–196, 1986.

4. Dymsza, H. A., ''Nutritional Application and Implication of 1,3-Butanediol,'' *Federation Proceedings*, 34:2167–2170, 1975.

5. Giron, H. M., ''Some Aspects of the Utilization of 1,3-Diols as Synthetic Dietary Energy Sources'' (thesis for master of science degree), Massachusetts Institute of Technology, August 1968.

6. Food and Drug Research Laboratories, Inc., Morgareidge, K., ''Utilization of 1,3-Butylene Glycol in Dogs,'' November 1, 1972.

7. Mehlman, M. A., ''Synthetic Food Additives as a Source of Calories: 1,3-Butanediol,'' *Federation Proceedings*, 34:2166, 1975.

8. Miller, S. A., and H. A. Dymsza, ''Utilization by the Rat of 1,3-Butanediol as a Synthetic Source of Dietary Energy,'' *Journal of Nutrition*, 91:79–88, 1967.

9. Stoewsand, G. S., H. A. Dymsza, M. A. Kilmore, and S. M. Swift, ''Plasma Lipid Changes in Exercised Dogs Fed 1,3-Butanediol,'' *Federation Proceedings*, 25:608, 1966 (abstract).

10. Young, J. W., ''Use of 1,3-Butanediol for Lactation and Growth in Cattle,'' *Federation Proceedings*, 34:2177–2181, 1975.

11. Mackerer, C. R., R. N. Saunders, J. R. Haettinger, and M. A. Mehlman, ''Influence of 1,3-Butanediol on Blood Glucose Concentration and Pancreatic Insulin Content of Streptozotocin-Diabetic Rats,'' *Federation Proceedings*, 34:2191–2196, 1975.

12. Mehlman, M. A., R. B. Tobin, and J. B. Johnston, ''Metabolic Control of Enzymes in Normal, Diabetic and Diabetic Insulin Treated Rats Utilizing 1,3-Butanediol'' (undated).

13. Mehlman, M. A., R. B. Tobin, H. K. J. Hahn, V. DeVore, and L. Kleager, ''Metabolic Fate of 1,3-Butanediol (BD) in the Rat,'' Omaha, NE (undated).

14. Mehlman, M. A., R. B. Tobin, and J. B. Johnston, ''Influence of Dietary 1,3-Butanediol on Metabolites and Enzymes Involved in Gluconeogenesis and Lipogenesis in Rats,'' *Journal of Nutrition*, 100:1341–1346, 1970.

15. Mehlman, M. A., R. B. Tobin, and C. R. Mackerer, ''1,3-Butanediol Catabolism in the Rat,'' *Federation Proceedings*, 34:2182–2185, 1975.

16. Nahapetian, A., ''Metabolism in Vivo of 1,3-Butanediol in the Rat'' (thesis for doctor of science degree), Massachusetts Institute of Technology, September 1971.

17. Parker, M. M. (under the supervision of Myron A. Mehlman), ''Metabolic Effects of 1,3-Butanediol,'' Omaha, NE, August 1972.

18. Romsos, D. R., P. S. Belo, and G. A. Leveille, ''Butanediol and Lipid Metabolism,'' *Federation Proceedings*, 34:2186–2190, 1975.

19. Tate, R. L., M. A. Mehlman, and R. B. Tobin, ''The Metabolism of 1,3-Butanediol'' (undated).

20. Tate, R. L., M. A. Mehlman, and R. B. Tobin, ''Metabolic Fate of 1,3-Butanediol in the Rat: Conversion to β-Hydroxybutyrate,'' *Journal of Nutrition*, 101:1719–1726, 1971.

21. Tobin, R. B., M. A. Mehlman, C. Kies, H. M. Fox, and J. S. Soeldner, ''Nutritional and Metabolic Studies in Humans With 1,3-Butanediol,'' *Federation Proceedings*, 34:2171–2176, 1975.

22. ''Toxicological Principles for the Safety Assessment of Direct Food Additives and Color Additives Used in Food'' in ''Redbook,'' Center for Food Safety and Applied Nutrition, Food and Drug Administration, 1982. Available through National Technical Information Service (NTIS), 5285 Port Royal Rd., Springfield, VA 22161, order number PB–83–170696. Revised draft is available from the Office of Premarket Approval (HFS–206), 200 C St. SW., Washington, DC 20204–0001.

List of Subjects in 21 CFR Part 172

Food additives, Incorporation by reference, Reporting and recordkeeping requirements.

Therefore, under the Federal Food, Drug, and Cosmetic Act and under authority delegated to the Commissioner of Food and Drugs and redelegated to the Director, Center for Food Safety and Applied Nutrition, 21 CFR part 172 is amended as follows:

PART 172—FOOD ADDITIVES PERMITTED FOR DIRECT ADDITION TO FOOD FOR HUMAN CONSUMPTION

1. The authority citation for 21 CFR part 172 continues to read as follows:

Authority: Secs. 201, 401, 402, 409, 701, 721 of the Federal Food, Drug, and Cosmetic Act (21 U.S.C. 321, 341, 342, 348, 371, 379e).

2. New § 172.712 is added to subpart H to read as follows:

§ 172.712 1,3-Butylene glycol.

The food additive 1,3-butylene glycol (CAS Reg. No. 107–88–0) may be safely used in food in accordance with the following prescribed conditions:

(a) It is prepared by the aldol condensation of acetaldehyde followed by catalytic hydrogenation.

(b) The food additive shall conform to the identity and specifications listed in the monograph entitled ''1,3-Butylene Glycol'' in the Food Chemicals Codex, 4th ed. (1996), p. 52, which is incorporated by reference in accordance with 5 U.S.C. 552(a) and 1 CFR part 51. Copies are available from the Office of Premarket Approval, Center for Food Safety and Applied Nutrition, 200 C St. SW., Washington, DC 20204–0001, or may be examined at the Center for Food Safety and Applied Nutrition's Library, Food and Drug Administration, 200 C St. SW., rm. 3321, Washington, DC, or at the Office of the Federal Register, 800 North Capitol St. NW., suite 700, Washington, DC.

(c) It is used in the manufacture of sausage casings as a formulation aid as defined in § 170.3(o)(14) of this chapter and as a processing aid as defined in § 170.3(o)(24) of this chapter.

Dated: April 14, 1997.

Fred R. Shank,

Director, Center for Food Safety and Applied Nutrition.

[FR Doc. 97–12461 Filed 5–12–97; 8:45 am]

BILLING CODE 4160–01–F

DEPARTMENT OF HEALTH AND HUMAN SERVICES

Food and Drug Administration

21 CFR Part 812

Export Requirements for Medical Devices; Technical Amendment

AGENCY: Food and Drug Administration, HHS.

ACTION: Final rule; technical amendment.

SUMMARY: The Food and Drug Administration (FDA) is amending its regulations for exporting devices for investigational use to correct the statutory reference. This action is being taken to reflect changes in the Federal Food, Drug, and Cosmetic Act (the act), and to ensure the accuracy and consistency of the regulations.

EFFECTIVE DATE: May 13, 1997.

FOR FURTHER INFORMATION CONTACT: Philip L. Chao, Office of Policy (HF–23), Food and Drug Administration, 5600 Fishers Lane, Rockville, MD 20850, 301–827–3380.

SUPPLEMENTARY INFORMATION: At present, two statutory provisions in the act govern the export of devices that are not approved for marketing in the United States. The first provision, at section 801(e)(2) of the act (21 U.S.C. 381(e)(2)), became law as part of the Medical Device Amendments Act of 1976 (Pub. L. 94–295) and required FDA's approval of certain exports of unapproved devices.

The second provision, now codified as section 802 of the act (21 U.S.C. 382), was the result of the FDA Export Reform and Enhancement Act of 1996 (Pub. L. 104–134, and amended by Pub. L. 104–180) (the Export Act of 1996). The Export Act of 1996 amended, among other things, sections 801 and 802 of the act. The Export Act of 1996 amended section 801(e)(2) of the act to state, in part, that export of an unapproved device may occur only if the agency determines that exportation of the device is not contrary to the public health and safety and has the approval of the country to which it is intended for export or ''the device is eligible for export under section 802'' of the act. Section 802 of the act, as amended, authorizes exports of unapproved drugs and devices if certain conditions or requirements are met. Under section 802(b)(1) of the act, an unapproved device may be exported to any country if the device complies with the laws of that country and has valid marketing authorization in Australia, Canada, Israel, Japan, New Zealand, Switzerland, South Africa, or in any country in the EU or the EEA (often referred to as the ''listed countries''). At present, the EU countries are Austria, Belgium, Denmark, Germany, Greece, Finland, France, Ireland, Italy, Luxembourg, the Netherlands, Portugal, Spain, Sweden, and the United Kingdom. The EEA countries are the EU countries, plus Iceland, Liechtenstein, and Norway. As new countries join the EU or the EEA, they will automatically be treated as listed countries without any need for FDA action. Additionally, the Secretary of Health and Human Services may designate additional countries to be added to the list if certain requirements are met.

Other provisions of the Export Act of 1996 permit devices to be exported, without prior FDA approval, for investigational use in the listed countries and to be exported in anticipation of market authorization in the listed countries (section 802(c) and (d) of the act). Prior FDA approval is required for devices intended for use in the treatment of a tropical disease or a disease that is not of significant prevalence in the United States (section 802(e) of the act).

All devices exported under section 802 of the act are subject to certain requirements, under section 802(f) of the act. For example, the device must be manufactured, processed, packaged, and held in substantial conformity with current good manufacturing practice requirements or meet international standards as certified by an international standards organization recognized by the agency; must not be adulterated under section 501(a)(1), (2)(A), or (3) (21 U.S.C. 351(a)(1), (2)(A), or (3)) or section 501(c) of the act; and must comply with sections 801(e)(1)(A) through (D) of the act (which require the

device to accord to the foreign purchaser's specifications, not be in conflict with the laws of the foreign country to which the device is being exported, be labeled on the outside of the shipping package that the device is intended for export, and not be sold or offered for sale in domestic commerce).

The only regulation pertaining to exports of unapproved devices for investigational use is at 21 CFR 812.18(b). The provision, which was originally written decades ago, simply stated that, ''A person exporting an investigational device subject to this part shall obtain FDA's prior approval as required by section 801(d) of the act.'' However, since the provision was written, Congress has amended the act twice; under the Drug Export Amendments Act of 1986, section 801(d) of the act was renumbered to become section 801(e) of the act, and the Export Act of 1996 established section 802 of the act as an alternative export mechanism for unapproved devices for investigational use. Consequently, FDA is amending § 812.18(b) to state that, ''A person exporting an investigational device subject to this part shall obtain FDA's prior approval as required by section 801(e) of the act or shall comply with the applicable export requirements in section 802 of the act.'' This amendment reflects the correct paragraph in section 801 of the act that applies to investigational device exports as well as the export mechanisms in section 802 of the act.

Publication of this document constitutes final action on these changes under the Administrative Procedure Act (5 U.S.C. 553(b)(3)(B)). Notice and public procedure are unnecessary because FDA is merely correcting a statutory reference.

List of Subjects in 21 CFR Part 812

Health records, Medical devices, Medical research, Reporting and recordkeeping requirements.

Therefore, under the Federal Food, Drug, and Cosmetic Act and under authority delegated to the Commissioner of Food and Drugs, 21 CFR part 812 is amended as follows:

PART 812—INVESTIGATIONAL DEVICE EXEMPTIONS

1. The authority citation for 21 CFR part 812 is revised to read as follows:

Authority: Secs. 301, 501, 502, 503, 505, 506, 507, 510, 513–516, 518–520, 701, 702, 704, 721, 801, 802, 803 of the Federal Food, Drug, and Cosmetic Act (21 U.S.C. 331, 351, 352, 353, 355, 356, 357, 360, 360c–360f, 360h–360j, 371, 372, 374, 379e, 381, 382, 383); secs. 215, 301, 351, 354–360F of the Public Health Service Act (42 U.S.C. 216, 241, 262, 263b–263n).

2. Section 812.18 is amended by revising paragraph (b) to read as follows:

§ 812.18 Import and export requirements.

* * * * *

(b) *Exports.* A person exporting an investigational device subject to this part shall obtain FDA's prior approval, as required by section 801(e) of the act or comply with section 802 of the act.

Dated: May 6, 1997.

William K. Hubbard,

Associate Commissioner for Policy Coordination.

[FR Doc. 97–12524 Filed 5–12–97; 8:45 am]

BILLING CODE 4160–01–F

DEPARTMENT OF TRANSPORTATION

Coast Guard

33 CFR Part 100

[CCGD11–97–003]

RIN 2115–AE46

Special Local Regulations: California Cup

AGENCY: Coast Guard, DOT.

ACTION: Notice of implementation.

SUMMARY: This notice implements 33 CFR 100.1101, ''Southern California Marine Events,'' for the 1997 California Cup Race. This event consists of a sailboat race with approximately 250 participants. These regulations will be effective in the portion of Santa Monica Bay off Santa Monica, California described in Table 1 to 33 CFR 100.1101. Implementation of section 33 CFR 11.1101 is necessary to control vessel traffic in the regulated area during the race to ensure the safety of participants and spectators.

DATES: The regulations in 33 CFR 100.1101 are effective from 2 p.m. until 5 p.m. on 23 May 1997, and from 11 a.m. until 5 p.m. on 24 and 25 May 1997, unless cancelled earlier by the Patrol Commander.

FOR FURTHER INFORMATION CONTACT: QMC D.K. LARSON, U.S. Coast Guard Marine Safety Office/Group Los Angeles/Long Beach, 165 N. Pico Avenue, Long Beach, California 90802; Tel: (310) 980–4442.

SUPPLEMENTARY INFORMATION: The California Cup is scheduled to occur on 23, 24 and 25 May 1997. These Special Local Regulations permit Coast Guard control of vessel traffic in order to ensure the safety of spectator and participant vessels. In accordance with the regulations in 33 CFR 100.1101, persons and vessels shall not anchor in or loiter in the regulated area, or impede the transit of participant or official patrol vessels, unless authorized by the Coast Guard Patrol Commander.

Dated: May 5, 1997.

R.T. Rufe, Jr.,

Vice Admiral, U.S. Coast Guard Commander, Eleventh Coast Guard District, Alameda, California.

[FR Doc. 97–12485 Filed 5–12–97; 8:45 am]

BILLING CODE 4910–14–M

DEPARTMENT OF DEFENSE

Corps of Engineers, Department of the Army

33 CFR Part 325

Processing of Department of the Army Permits

AGENCY: Army Corps of Engineers, DoD.

ACTION: Final rule.

SUMMARY: The Corps is making several minor editorial changes to its permit regulations to reflect a change in the title of a Division Office in the National Ocean Service (NOS), National Oceanic and Atmospheric Administration and the Agency's change of address. This amendment is necessary because Corps regulations require notification of the NOS by Corps Districts and permittees under certain circumstances.

EFFECTIVE DATE: May 13, 1997.

FOR FURTHER INFORMATION CONTACT: Mr. Ralph Eppard, HQUSACE, Regulatory Branch, CECW–OR at (202) 761–1783.

SUPPLEMENTARY INFORMATION: Pursuant to its authorities in sections 9 and 10 of the Rivers and Harbors Act of 1899 and section 404 of the Clean Water Act, the Corps issued regulations for the Regulatory Program in 33 CFR 320–330. In § 325.2(a)(9) (i) and (iii) and § 325.3(d)(2)(ii), and Appendix A–Permit Form and Special Conditions, a reference is made to the Charting and Geodetic Services, N/CG222, National Ocean Service, NOAA, Rockville, Maryland 20852. The correct identity and address for that Agency has changed and is now the National Ocean Service, Office of Coast Survey, N/CS261, 1315 East West Highway, Silver Spring, Maryland 20910–3282.

No other changes are being made to the permit regulations.

Procedural Requirements:

a. Review Under Executive Order 12866

The amendments contained in this rule are editorial and only reflect

another Federal Agency's internal reorganization and address change. There is no known impact on the public.

b. Review Under the Regulatory Flexibility Act

These rules have been reviewed under the Regulatory Flexibility Act (Pub. L. 96–354), which requires the preparation of a regulatory flexibility analysis for any regulation that will have a significant economic impact on a substantial number of small entities (i.e., small businesses and small governments). The Corps expects that the economic impact of these changes to permit regulations will have no impact on the public, and accordingly, certifies that this proposal will have no significant economic impact on small entities.

c. Review Under the National Environmental Policy Act

An environmental assessment has been prepared for the Regulations in 33 CFR parts 320–330. We have concluded based on the minor nature of these editorial changes to the permit regulations that these amendments will not have significant impact to the human environment, and preparation of an environmental impact statement is not required.

d. Unfunded Mandates Act

This rule does not impose an enforceable duty among the private sector and therefore, is not a Federal private sector mandate and is not subject to the requirements of Section 202 or 205 of the Unfunded Mandates Act. We have also found under Section 203 of the Act, that small governments will not be significantly and uniquely affected by this rulemaking.

e. Submission to Congress and the GAO

Pursuant to Section 801(a)(1)(A) of the Administrative Procedure Act as amended by the Small Business Regulatory Enforcement Fairness Act of 1996, the Corps has determined that submittal of this rule to the U.S. Senate, House of Representatives, and the Comptroller General of the General Accounting Office is not required. This rule reflects a change in agency organization and its relocation, corrects outdated materials in Department of the Army regulations. This is not a major rule within the meaning of Section 804(2) of the Administrative Procedure Act, as amended.

List of Subjects in 33 CFR Part 325

Administrative practice and procedure, Environmental protection, Intergovernmental relations, Navigation, Water pollution control, Waterways.

For the reasons set out in the preamble, we are amending 33 CFR part 325, as follows:

PART 325—[AMENDED]

1. The authority citation for Part 325 continues to read as follows:

Authority: 33 U.S.C. 401 et seq.; 33 U.S.C. 1344; 33 U.S.C. 1413.

§§ 325.2 and 325.3 [Amended]

2. In 33 CFR 325.2(a)(9) (i) and (iii) and 325.3(d)(2)(ii) remove the words ''Charting and Geodetic Services N/CG222, National Ocean Service, NOAA, Rockville, Maryland 20852'' and add in their place the words ''National Ocean Service, Office of Coast Survey, N/CS261, 1315 East West Highway, Silver Spring, Maryland 20910–3282''.

Appendix A—Permit Form and Special Conditions [Amended]

3. In Appendix A—Permit Form and Special Conditions, under heading B. Special Conditions, special condition #5, remove the words ''The Director, National Ocean Service (N/CG222 , Rockville, Maryland 20852'' and add in their place the words ''National Ocean Service, Office of Coast Survey, N/CS261, 1315 East West Highway, Silver Spring, Maryland 20910–3282''.

Dated: May 1, 1997.

Approved.

For the Commander:

Charles M. Hess,

Chief, Operations, Construction and Readiness Division, Directorate of Civil Works.

[FR Doc. 97–12433 Filed 5–12–97; 8:45 am]

BILLING CODE 3710–92–M

ENVIRONMENTAL PROTECTION AGENCY

40 CFR Part 81

[MN41–01–7266a; FRL–5820–8]

Designation of Areas for Air Quality Planning Purposes; Minnesota

AGENCY: Environmental Protection Agency.

ACTION: Direct final rule.

SUMMARY: In this action, the Environmental Protection Agency (EPA) is approving the St. Paul Park Area redesignation request submitted by the State of Minnesota on October 31, 1995. Minnesota requested that portions of Dakota and Washington Counties (the areas surrounding the Ashland Petroleum Company) be redesignated to attainment for the National Ambient Air Quality Standard (NAAQS) for sulfur dioxide (SO2). All future references to the areas surrounding the Ashland Petroleum Company will be made using St. Paul Park. Subsequent to this approval, Dakota and Washington Counties are each designated attainment in their entirety.

DATES: This ''Direct final''is effective July 14, 1997 unless EPA receives adverse or critical comments by June 13, 1997. If the effective date is delayed, timely notice will be published in the **Federal Register**.

ADDRESSES: Copies of the revision request are available for inspection at the following address: Environmental Protection Agency, Region 5, Air and Radiation Division, 77 West Jackson Boulevard, Chicago, Illinois 60604. (It is recommended that you telephone Todd Nettesheim at (312) 353–9153 before visiting the Region 5 Office.)

Written comments should be addressed to: Carlton Nash, Chief, Regulation Development Section, Air Programs Branch (AR–18J), United States Environmental Protection Agency, 77 West Jackson Boulevard, Chicago, Illinois 60604.

FOR FURTHER INFORMATION CONTACT: Todd Nettesheim, Air Programs Branch, Regulation Development Section (AR–18J), United States Environmental Protection Agency, Region 5, 77 W. Jackson Boulevard, Chicago, Illinois 60604, (312) 353–9153.

SUPPLEMENTARY INFORMATION:

I. Background

The NAAQS for SO2 consist of two standards: a primary standard for the protection of public health and a secondary standard for the protection of public welfare. The primary SO2 standard consists of a 24-hour maximum of 0.14 particles per million (ppm) and an annual arithmetic mean ambient SO2 concentration of 0.030 ppm. The secondary standard consists of a 3-hour maximum ambient SO2 concentration of 0.5 ppm. (40 CFR 50.2–50.5)

Monitored violations of the primary SO2 NAAQS from 1975 through 1977 led the Minnesota Pollution Control Agency (MPCA) to recommend EPA to designate Air Quality Control Region (AQCR) 131 as nonattainment for the SO2 NAAQS. The AQCR 131 includes Anoka, Carver, Dakota, Hennepin, Ramsey, Scott, and Washington Counties in the State of Minnesota. On March 3, 1978, EPA published the designation of AQCR 131 as a primary nonattainment area for SO2 based on these initial exceedences (43 FR 8962).

During 1980, the MPCA submitted an SO2 State Implementation Plan (SIP) revision which the EPA approved in 1981. In 1983, the MPCA requested redesignation to attainment for all of AQCR 131 except for an area surrounding the emission sources in the Pine Bend Area of Dakota County. The redesignation request was made this way because all of AQCR 131, except the Pine Bend Area, demonstrated monitored attainment of the SO2 NAAQS for 2 years following EPA approval of the AQCR 131 SO2 SIP. EPA delayed action while they reassessed their nonattainment policy.

During 1986 and 1987, the MPCA submitted SO2 SIP revisions for the St. Paul Park Area, the Pine Bend Area, and the rest of AQCR 131. From 1988 through early 1990, the MPCA and EPA focused on resolving issues in the Pine Bend Area. EPA suspended actions on SO2 SIPs during 1990 pending the passage of the Clean Air Act (Act) Amendments of 1990.

On December 22, 1992, Minnesota submitted an SO2 SIP revision for the St. Paul Park Area. EPA required changes to the SIP before it could be approved. Minnesota submitted the required changes on September 30, 1994. EPA approved the St. Paul Park SO2 SIP on January 18, 1995 (60 FR 3544).

II. Evaluation Criteria

Title I, section 107(d)(3)(D) of the Act, as amended in 1990, authorizes the Governor of a State to request the redesignation of any area within the State from nonattainment to attainment. The criteria used to review redesignation requests are derived from the Act. An area can be redesignated to attainment if all of the following conditions are met:

(1) EPA has determined that the NAAQS have been attained;

(2) The applicable implementation plan has been fully approved by EPA under section 110(k) of the Act;

(3) EPA has determined that the improvement in air quality is due to permanent and enforceable reductions;

(4) The State has met all applicable requirements for the area under section 110 and Part D of the Act; and

(5) EPA has fully approved a maintenance plan, including a contingency plan, for the area under section 175A of the Act.

III. Summary of State Submittal

The following paragraphs discuss how the State's redesignation request for the St. Paul Park Area address the Act's requirements.

A. Demonstrated Attainment of the NAAQS

As explained in the April 21, 1983, memorandum ''Section 107 Designation Policy Summary'' from the Director of the Office of Air Quality Planning and Standards (OAQPS), eight consecutive quarters of data showing SO2 NAAQS attainment are required for redesignation. A violation of the SO2 NAAQS occurs when more than one exceedence of the SO2 NAAQS is recorded in any year (40 CFR 50.4). Minnesota's October 31, 1995, submittal includes ambient monitoring data showing that the St. Paul Park Area has met the SO2 NAAQS from 1989 to 1994, which is more than enough time of clean air to promulgate a redesignation to attainment. Additionally, preliminary monitoring data for the period of 1995 to 1996 indicate that the SO2 NAAQS are still being met. The highest monitored SO2 values during this time have been well below the SO2 standards. The initial exceedences of the SO2 NAAQS in the St. Paul Park Area occurred between 1976 and 1978; while, the only other possible exceedences in this area occurred in 1987 and 1988. In both 1987 and 1988, the 75 percent sampling criteria for SO2 was not met at the monitor located by the City Garage near Seventh Avenue and Fifth Street. A monitor in the St. Paul Park Area was then established across the street at 649 Fifth Street on February 28, 1989. There have been no exceedences of the SO2 NAAQS at this monitor, and no additional SO2 exceedences have been recorded in the Aerometric Information and Retrieval System database through June 1996.

Dispersion modeling is also required to demonstrate attainment of the SO2 NAAQS. A September 4, 1992, EPA policy memorandum titled ''Procedures for Processing Requests to Redesignate Areas to Attainment'' (the Calcagni memo) explains that additional dispersion modeling is not required in support of an SO2 redesignation request if an adequate modeled attainment demonstration was submitted and approved as part of the fully implemented SIP, and no indication of an existing air quality deficiency exists. This required modeling data was submitted to EPA with SIP revisions on December 22, 1992. The modeled demonstration evaluates the SO2 source's impact and provides the areas of expected high concentration of SO2 based on current meteorological conditions at the Ashland Petroleum Company. The modeling data demonstrate modeled attainment of the SO2 NAAQS in the St. Paul Park Area with all control measures in operation.

B. Fully Approved SIP

The SIP for the area must be fully approved under section 110(k) of the Act and must satisfy all requirements that apply to the area. EPA's guidance for implementing section 110 of the Act is discussed in the General Preamble to Title I (57 FR 13498, April 16, 1992). The SO2 SIP for the St. Paul Park Area met the requirements of section 110 of the Act and was approved by EPA on January 18, 1995 (60 FR 3544).

C. Permanent and Enforceable Reductions in Emissions

The St. Paul Park Area attainment of the SO2 standards can be attributed to the permanent and enforceable control measures implemented at the Ashland Petroleum Company. SO2 emission limits and operating restrictions are imposed on the Ashland Petroleum Company by means of a non-expiring Administrative Order. This Order was submitted to EPA in the 1992 SIP submittal and was approved on January 18, 1995, which rendered the Order enforceable. The regulations are permanent and any future revisions to the rules must be submitted to and approved by EPA.

The Calcagni memo says that States should estimate the percent reductions from the year that determined the design value in SO2 emissions. The original SO2 violations that resulted in AQCR 131 (which includes the St. Paul Park Area) being designated nonattainment occurred between 1975 and 1977. However, it would be unrealistic to go back approximately 20 years to compare SO2 reductions. In addition, reliable data from the mid-1970's is not readily available. Therefore, improvements in air quality were measured based on reductions in SO2 emissions since the June 30, 1987, SIP submittal for the St. Paul Park Area.

The June 30, 1987, SIP submittal included a permit for the Ashland Petroleum Company, while the 1992 SIP submittal included the Administrative Order. The following table illustrates the reductions made as a result of the 1992 SIP submittal.

Type of equipment	Permit limit	Administrative order limit	Percent SO2 reduction
SRU/SCOT	500 lb/hr	15 lb/hr	97%.
FCC	800 lb/hr	793.65 lb/hr	Negligible.
All oil-fired sources	1.6 lb/MMBtu	0.9 lb/MMBtu	44%.
All gas-fired sources	0.0234 lb/MMBtu	Same	None.

SO2 emissions from the Ashland Petroleum Company were modeled with all these post-Administrative Order control measures in place. The resulting data showed modeled attainment of the SO2 NAAQS. The Administrative Order has been approved at the State and Federal level, and is non-expiring. Consequently, the reductions in emissions in the St. Paul Park Area are permanent and enforceable.

D. Fully Approved Maintenance Plan

Under section 107(d)(3)(E) and section 175A of the Act, the State must submit a SIP revision to provide for a maintenance plan in order for an area to be redesignated to attainment. Section 175A of the Act sets forth the maintenance plan requirements for areas seeking redesignation from nonattainment to attainment. The maintenance plan must demonstrate continued attainment of the applicable NAAQS for at least 10 years after the area is redesignated as well as contain such additional measures, if any, as may be necessary to ensure maintenance. Eight years after the redesignation date, the State is required to revise its SIP to provide for maintenance of the standard in the affected area for an additional ten-year period (section 175A(b) of the Act).

In addition, the maintenance plan should contain such contingency measures as the Administrator deems necessary to ensure prompt correction of any violation of the NAAQS (section 175A(d) of the Act). The Act provides that, at a minimum, the contingency measures must include a requirement that the State will implement all measures contained in the nonattainment SIP prior to redesignation. Failure to maintain the NAAQS and triggering of the contingency plan will not necessitate a revision of the SIP unless required by the Administrator, as stated in section 175A(d) of the Act.

EPA redesignation policy stated in the September 4, 1992, memorandum lists the five core provisions that a plan must contain in order to ensure maintenance of the standards: (1) an attainment inventory, (2) a maintenance demonstration, (3) a monitoring network, (4) verification of continued attainment, and (5) a contingency plan. The following paragraphs will discuss Minnesota's submittal with regard to EPA's requirements to ensure maintenance of the standards.

1. Attainment Inventory

The State is required to develop an attainment inventory to identify the level of emissions in the area at the time of redesignation. However, the attainment inventory associated with this redesignation will be the actual inventory at the time the St. Paul Park Area attained the standard because Minnesota has made an adequate demonstration that air quality has improved as a result of their December 22, 1992, SIP submittal. Minnesota's air dispersion modeling included in the 1992 SIP submittal contains the emission inventory of SO2 sources in the St. Paul Park Area. The modeling methodology and predicted SO2 concentrations based on the SO2 emissions inventory in the 1992 SIP submittal are summarized in the following sections.

The modeling results provided below demonstrate that Minnesota's attainment inventory included in their 1992 SIP submittal is sufficient to meet the SO2 standards in the future.

2. Maintenance Demonstration

The State is required to demonstrate maintenance of the NAAQS by either showing that future emissions of a pollutant or its precursors will not exceed the level of the attainment inventory, or by modeling to show that the future mix of sources and emission rates will not cause a violation of the NAAQS.

In the 1992 St. Paul Park SIP submittal, a modeled attainment demonstration was included to show that the reductions in emissions as a result of this SIP would be sufficient to attain the applicable NAAQS. The St. Paul Park Area's related maintenance demonstration is based on the same modeling that was included in that 1992 SIP submittal. A summary of the air quality model used by Minnesota in the 1992 SIP submittal and the resulting ambient SO2 concentrations expected from the application of various control strategies are contained below. Details of the modeled demonstration are contained in the proposed action on the St. Paul Park SIP (59 FR 45653).

Dispersion modeling for the 3-hour, 24-hour, and annual standards was conducted according to modeling guidance in effect at the time. The Industrial Source Complex Short-Term (ISCST) model was run using the regulatory option switch. SO2 impacts were calculated over a 4 km by 4 km area with 100 meter resolution (i.e., 1,681 receptors). Other (non-St. Paul Park) larger Twin Cities SO2 sources were modeled explicitly while other (non-St. Paul Park) smaller Twin Cities SO2 sources including area sources were accounted for using a background SO2 concentration of 8 μ/m3 (0.003 ppm). This simple terrain SO2 modeling indicates maximum second-highest 3-hour and 24-hour SO2 concentrations of 1186.26 and 332.16 μ/m3 (0.45 and 0.127 ppm), and maximum annual SO2 concentrations of 79.6 μ/m3 (0.030 ppm). All three of these modeled maximum SO2 concentrations fall at or below the SO2 NAAQS.

Complex terrain dispersion modeling for 24-hour averaging time was performed using the COMPLEX1 model in VALLEY mode modified for urban conditions (i.e., stability E and urban wind profile coefficients). This complex terrain SO2 modeling indicates maximum second-highest 24-hour SO2 concentrations of 195 μg/m3 (0.074 ppm). Because the COMPLEX1/VALLEY model 24-hour concentration was less than ISCST model result, the simple terrain (ISCST model) results were used for establishing the SO2 emission limits in the Ashland Petroleum Company Administrative Order.

In either the modeled approach or the attainment inventory approach, the maintenance demonstration requires the State to project emissions for the 10-year period following redesignation. This requirement is used for the purpose of showing that emissions will not increase over the attainment inventory. The St. Paul Park Area's emissions inventory is contained in the air dispersion modeling for Minnesota's 1992 SIP revision submittal. According to this inventory, there is approximately a 10 percent growth margin for the 3-hour and 24-hour standards and approximately a 1 percent growth margin for the annual standard.

3. Monitoring Network

In accordance with 40 CFR Part 58, after an area has been redesignated to attainment, the State must continue to operate an appropriate air quality network to verify the attainment status of the area. The current SO2 monitoring network in the St. Paul Park Area will remain operating in accordance with this regulation.

4. Verification of Continued Attainment

Each State should ensure that it has the legal authority to implement and enforce all measures necessary to attain and maintain the NAAQS. Descriptions of the MPCA's authority to enforce the orders were included in previous SIP submittal as letters from the Minnesota Attorney General's office.

Regardless of whether the maintenance demonstration is based on a showing that future emission inventories will not exceed the attainment inventory or on modeling, the State submittal should indicate how the State will track the progress of the maintenance plan. This is necessary because emission projections made for the maintenance demonstration depend on assumptions of point and area source growth.

Minnesota plans to use their permitting program to track the progress of the maintenance plan. The permitting program will be able to monitor the growth in the St. Paul Park Area by keeping track of new permit applications, keeping track of requests for permit amendments, and observing the annual emission inventories that all facilities with permits must submit to the MPCA. In order to thoroughly monitor the growth in the area with their permitting program, Minnesota has lowered their potential to emit threshold for SO2 sources needing a permit to 50 tons per year (the Federal limit is 100 tons per year).

The frequency of these monitoring activities will depend on the timing of requests for new permits and permit amendments. Facilities operating under permits must submit their emission inventories in the spring of every year.

Furthermore, future emissions are not predicted to increase for several qualitative reasons. First, the Clean Fuel Fleets Project initiated by Minnesota's refineries is producing diesel fuel with 0.05 percent sulfur instead of the standard 0.5 percent sulfur. This will decrease SO2 emissions for companies using this cleaner fuel. Second, Minnesota has a ''registration permit'' rule that encourages facilities to reduce emissions, thereby avoiding the need for a Title V permit. Third, Minnesota intends to require dispersion modeling of all major (Part 70) SO2 sources with a potential to emit at least 100 tons per year. The final reason relates to the possible overestimate of predicted SO2 concentrations due to the use of conservative stack base elevations for many of the smaller SO2 emissions sources (i.e., the Mississippi River elevation which is the lowest point in the Twin Cities area).

The incentives to reduce SO2 emissions, Minnesota's permitting program, requirements for dispersion modeling, and the overestimates of predicted SO2 concentrations jointly illustrate that SO2 emissions are not likely to increase in the St. Paul Park Area. These factors will also provide for continued attainment of the SO2 NAAQS in the St. Paul Park Area.

5. Contingency Plan

Section 175A of the Act requires that a maintenance plan include contingency provisions, as necessary, to promptly correct any violation of the NAAQS that occurs after redesignation of that area. These contingency measures are distinguished from those generally required for nonattainment areas under section 172(c)(9). For the purposes of section 175A, a State is not required to have fully adopted contingency measures that will take effect without further action by the State in order for the maintenance plan to be approved. However, the contingency plan is considered to be an enforceable part of the SIP and should ensure that the contingency measures are adopted expediently once they are triggered. The plan should clearly identify the measures to be adopted, a schedule and procedure for adoption and implementation, and a specific time limit for action by the State. As a necessary part of the plan, the State should also identify specific indicators, or triggers, which will be used to determine when the contingency measures need to be implemented.

The General Preamble for the Implementation of Title I of the Act published in the **Federal Register** on April 16, 1992 (57 FR 13498), states that SO2 SIPs present ''special considerations'' when referring to contingency plans. As stated in the Preamble, the modeling of SO2 sources is considered reliable for predicting the amount of SO2 emitted from sources in the nonattainment area. There is not such confidence with other pollutants. Also, the Preamble states that control measures for SO2 emissions are ''well understood and far less prone to uncertainty.'' Therefore, it would be unlikely for an SO2 area to implement emission controls but fail to attain the NAAQS. For the reasons stated above, EPA concluded that contingency measures in SO2 SIPs where a comprehensive program exists in the State ''to identify sources of violations of the SO2 NAAQS and to undertake an aggressive follow-up for compliance and enforcement'' need not submit contingency plans with their SO2 SIPs.

MPCA does have comprehensive enforcement and compliance programs that meet the above stated requirements.

The attainment inventory, maintenance demonstration, monitoring network, verification of continued attainment, and contingency plan submitted for the St. Paul Park Area constitute sound maintenance plans and satisfy EPA's requirements.

E. Part D and Other Section 110 Requirements

EPA approved the SO2 SIP revision for the St. Paul Park Area on January 18, 1995, after having concluded that the plan satisfied the requirements of Part D and section 110 of the Act. Once the SO2 nonattainment area is redesignated to attainment, the Part D new source review program requirements will not apply. However, the sources in the area will now be required to comply with the prevention of significant deterioration (PSD) program. Minnesota has been delegated the Federal PSD program as published in the Code of Federal Regulations at 40 CFR 52.1234 (1994).

1. Section 176 Conformity Requirements

Section 176 of the Act requires States to revise their SIPs to establish criteria and procedures to ensure that individual Federal actions will conform to the overall air quality planning goals in the applicable State SIP. Section 176 further provides that the State's conformity revisions must be consistent with the Federal conformity regulations promulgated by EPA under the Act. The requirement used by Federal agencies to determine conformity is defined in 40 CFR part 93 subpart B (''general conformity'').

EPA believes it is reasonable to interpret the conformity requirements as not being applicable requirements for purposes of evaluating redesignation requests under section 107(d) of the Act. The rationale for this is based on a combination of two factors. First, the requirement to submit SIP revisions to comply with the conformity provisions of the Act continues to apply to areas after redesignation to attainment, since such areas would be subject to a section 175A maintenance plan. Second, EPA's Federal conformity rules require the performance of conformity analyses in

the absence of federally approved State rules. Therefore, because areas are subject to the conformity requirements regardless of whether they are redesignated to attainment, and must implement conformity under Federal rules if State rules are not yet approved, EPA believes it is reasonable to view these requirements as not being applicable requirements for purposes of evaluation of a redesignation request. Consequently, the SO2 redesignation requests for the St. Paul Park Area may be approved notwithstanding the lack of fully approved general conformity rules. Refer to EPA's action in the Tampa, Florida, ozone redesignation finalized on December 7, 1995 (60 FR 627428).

IV. Final Rulemaking Action

EPA is approving the St. Paul Park Area redesignation request from the State of Minnesota submitted on October 31, 1995. Therefore, EPA is redesignating the St. Paul Park Area in Washington and Dakota Counties to attainment. Consequently, Washington and Dakota Counties in their entireties will be designated as attainment for the SO2 NAAQS. EPA has completed an analysis of this SIP revision request based on a review of the materials presented, and has determined that they met the requirements of the Act.

EPA is publishing this action without prior proposal because the EPA views this as a noncontroversial issue and anticipates no adverse comments. However, in a separate document in this **Federal Register** publication, EPA is proposing to approve the redesignation request should adverse or critical comments be filed. This action will be effective July 14, 1997 unless, by June 12, 1997, adverse or critical comments are received.

If EPA receives such comments, the actions affecting the St. Paul Park Area will be withdrawn before the effective date by publishing a subsequent document. All public comments received will be addressed in a subsequent final rule based on applicable parts of this action serving as a proposed rule. EPA will not institute a second comment period on this action. Any parties interested in commenting on this action should do so at this time. If no such comments are received, the public is advised that this action will be effective July 14, 1997.

Nothing in this action should be construed as permitting or allowing or establishing a precedent for any future request for revision to any SIP. Each request for revision to the SIP shall be considered separately in light of specific technical, economic, and environmental factors and in relation to relevant statutory and regulatory requirements.

V. Administrative Requirements

A. Executive Order 12866

This action has been classified as a Table 3 action for signature by the Regional Administrator under the procedures published in the **Federal Register** on January 19, 1989 (54 FR 2214–2225), as revised by a July 10, 1995 memorandum from Mary D. Nichols, Assistant Administrator for Air and Radiation. The Office of Management and Budget has exempted this regulatory action from Executive Order 12866 review.

B. Regulatory Flexibility Act

Under the Regulatory Flexibility Act, 5 U.S.C. 600 *et seq.*, EPA must prepare a regulatory flexibility analysis assessing the impact of any proposed or final rule on small entities. (5 U.S.C. 603 and 604). Alternatively, EPA may certify that the rule will not have a significant impact on a substantial number of small entities. Small entities include small businesses, small not-for-profit enterprises, and government entities with jurisdiction over populations of less than 50,000.

SIP approvals under section 110 and Subchapter I, Part D of the Act do not create any new requirements but simply approve requirements that the State is already imposing. Therefore, because the Federal SIP approval does not impose any new requirements, the Administrator certifies that it does not have a significant impact on any small entities affected. Moreover, due to the nature of the Federal-State relationship under the Act, preparation of a flexibility analysis would constitute Federal inquiry into the economic reasonableness of state action. The Act forbids EPA to base its actions concerning SIPs on such grounds. *Union Electric Co.* v. *EPA*, 427 U.S. 246, 255–66 (1976); 42 U.S.C. 7410(a)(2).

Redesignation of an area to attainment under section 107(d)(3)(E) of the Act does not impose any new requirements on small entities. Redesignation is an action that affects the status of a geographical area and does not impose any regulatory requirements on sources. The Administrator certifies that the approval of a redesignation request will not affect a substantial number of small entities.

C. Unfunded Mandates

Under section 202 of the Unfunded Mandates Reform Act of 1995, signed into law on March 22, 1995, EPA must undertake various actions in association with any proposed or final rule that includes a Federal mandate that may result in estimated costs to state, local, or tribal governments in the aggregate; or to the private sector, of $100 million or more. This Federal action approves pre-existing requirements under state or local law, and imposes no new Federal requirements. Accordingly, no additional costs to state, local, or tribal governments, or the private sector, result from this action.

D. Submission to Congress and the General Accounting Office

Under 5 U.S.C. 801(a)(1)(A) as added by the Small Business Regulatory Enforcement Fairness Act of 1996, EPA submitted a report containing this rule and other required information to the U.S. Senate, the U.S. House of Representatives and the Controller General of the General Accounting Office prior to publication of the rule in the **Federal Register**. This rule is not a ''major rule'' as defined by 5 U.S.C. 804(2).

E. Petitions for Judicial Review

Under section 307(b)(1) of the Act, petitions for judicial review of this action must be filed in the United States Court of Appeals for the appropriate circuit by July 14, 1997. Filing a petition for reconsideration by the Administrator of this final rule does not affect the finality of this rule for the purposes of judicial review nor does it extend the time within which a petition for judicial review may be filed, and shall not postpone the effectiveness of such rule or action. This action may not be challenged later in proceedings to enforce its requirements.

Executive Order 12866

The Office of Management and Budget has exempted this rule from the requirements of Section 6 of Executive Order 12866.

List of Subjects in 40 CFR Part 81

Environmental protection, Air pollution control.

Dated: April 23, 1997.

Valdas V. Adamkus,

Regional Administrator.

For the reasons stated in the preamble, part 81, chapter I, title 40 of the Code of Federal Regulations is amended as follows:

PART 81—[AMENDED]

1. The authority citation for part 81 continues to read as follows:

Authority: 42 U.S.C. 7401–7671q.

2. Section 81.324 is amended by revising the entry for AQCR 131 in the table entitled ''Minnesota-SO_2'' to read as follows:

§ 81.324 Minnesota.

* * * * *

MINNESOTA-SO_2

Designated area	Does not meet primary standards	Does not meet secondary standards	Cannot be classified	Better than national standards
AQCR 131:				
Anoka County				X
Carver County				X
Dakota County				X
Hennepin County				X
Ramsey County				X
Scott County				X
Washington County				X
* * * *	*	*	*	*

* * * * *

[FR Doc. 97–11994 Filed 5–12–97; 8:45 am]

BILLING CODE 6560–50–P

FEDERAL COMMUNICATIONS COMMISSION

47 CFR Parts 1 and 76

[CS Docket No. 96–46; FCC 97–130]

Open Video Systems

AGENCY: Federal Communications Commission.

ACTION: Final rule.

SUMMARY: The *Fourth Report and Order* adopts and modifies rules and policies concerning open video systems. The *Fourth Report and Order* amends our regulations to reflect the provisions of the Telecommunications Act of 1996 (the ''1996 Act'') which pertain to the filing requirements for certification applications, comments and oppositions, Notices of Intent and complaints concerning channel carriage. This item further fulfills Congress' mandate in adopting the 1996 Act and will provide guidance to open video system certification applicants, open video system operators, video programming providers and consumers concerning open video systems.

DATES: Effective upon approval of the OMB, but no sooner than June 12, 1997. The Commission will publish a document at a later date notifying the public as to the effective date. Written comments by the public on the modified information collections are due on or before June 12, 1997. Written comments must be submitted by OMB on the modified information collections on or before July 14, 1997.

ADDRESSES: A copy of any comments on the modified information collections contained herein should be submitted to Dorothy Conway, Federal Communications Commission, Room 234, 1919 M Street, N.W., Washington, DC 20554, or via the Internet to dconway@fcc.gov, and to Timothy Fain, OMB Desk Officer, 10236 NEOB, 725—17th Street, N.W., Washington, DC 20503 or via the Internet to fain—t@al.eop.gov.

FOR FURTHER INFORMATION CONTACT: Carolyn Fleming, Cable Services Bureau, (202) 418–7200. For additional information concerning the information collections contained herein contact Dorothy Conway at 202–418–0217, or via the Internet at dconway@fcc.gov.

SUPPLEMENTARY INFORMATION: This is a synopsis of the Commission's *Fourth Report and Order* in CS Docket No. 96–46, FCC 97–130, adopted April 10, 1997 and released April 15, 1997. The full text of this decision is available for inspection and copying during normal business hours in the FCC Reference Center (Room 239), 1919 M Street, NW, Washington, D.C. 20554, and may be purchased from the Commission's copy contractor, International Transcription Service, (202) 857–3800, 1919 M Street, NW, Washington, D.C. 20554.

The *Fourth Report and Order* contains modified information collections. It has been submitted to OMB for review, as required by the Paperwork Reduction Act of 1995. The Commission, as part of its continuing effort to reduce paperwork burdens, invites the general public and OMB to comment on the information collections contained in the *Fourth Report and Order.* Comments should address: (a) whether the proposed collection of information is necessary for the proper performance of the functions of the Commission, including whether the information shall have practical utility; (b) the accuracy of the Commission's burden estimates; (c) ways to enhance the quality, utility, and clarity of the information collected; and (d) ways to minimize the burden of the collection of information on the respondents, including the use of automated collection techniques or other forms of information technology.

OMB Approval Number: 3060–0700.

Title: Open Video Systems Provisions.

Form Number: FCC Form 1275.

Type of Review: Revision of a currently approved collection.

Respondents: Businesses and other for-profit entities; state, local and tribal governments.

Number of Respondents: 748. (10 OVS operators, 250 video programming providers that may request additional Notice of Intent information, file rate complaints, or dispute cases, 60 broadcast stations that may elect type of carriage and make network non-duplication notifications, 100 programming providers that may make notice of invalid rights claimed, 300 must-carry list requesters, 28 oppositions to OVS operator certifications.)

Number of Responses: 3,754. (14 certification filings/refilings, 250 requests for additional Notice of Intent information, 250 responses to requests for additional Notice of Intent information, 10 Notices of Intent, 50 rate complaints, 50 rate justifications, 60 carriage elections, 10 must-carry recordkeepers, 300 must-carry list requests, 300 provisions of must-carry lists, 1,200 notifications of network non-duplication rights to OVS operators, 100 programming provider notifications of invalid rights claimed, 1,100 OVS operator notifications to programming providers, 28 oppositions to certifications, 20 dispute case complainants, and 20 dispute case defendants.)

Estimated Burden to Respondents: Section 76.1502 Certification: We estimate that prospective OVS operators will make a total of 14 certification filings and refilings on an annual basis. The average burden to OVS operators for all aspects of each filing and refiling process, including serving copies to appropriate entities, is estimated to be 2 hours apiece; therefore 14 filings and refilings × 2 = 28 hours. We estimate there will be an average of 2 oppositions to each filing and refiling. The average burden entities will undergo in drafting and filing each opposition with the Commission's Office of the Secretary and Cable Services Bureaus is estimated to be 4 hours. 14 filings and refilings × 2 oppositions each × 4 hours for each opposition = 112 hours.

Section 76.1503 Carriage of video programming providers on open video systems: We currently estimate 10 Notices of Intent will be filed on an annual basis. The average number of entities that prospective OVS operators must notify with each Notice of Intent is estimated to be 45. The average burden for each OVS operator to undergo all aspects of the Notice of Intent process, including serving copies to all entities is estimated to be 8 hours; therefore 10 Notices × 8 hours each = 80 hours. We estimate that the number of written requests for additional information that will be received subsequent to Notices of Intent will be 25 per Notice of Intent. 10 Notices × 25 requests for additional information = 250. The average burden to prospective video programming providers to make each written request is estimated to be 2 hours apiece; therefore 10 × 25 × 2 = 500 hours. The average burden to each OVS operator to provide the additional information to the entire group of prospective video programming providers who requested additional information is estimated to be 8 hours apiece; therefore 10 Notices × 8 hours = 80 hours.

Section 76.1504 Rates, terms and conditions of carriage on open video systems: We estimate that video programming providers will file an average of 5 complaints against each OVS operator per year; therefore 10 OVS operators × 5 complaints = 50 complaints. We estimate the average burden to draft and file a complaint is 1 hour; therefore 50 complaints × 1 hour = 50 hours. We estimate the burden for OVS operators to undergo all aspects of the rate justification process to be 20 hours per justification; therefore 10 OVS operators × 5 justifications × 20 hours for each justification = 1,000 hours.

Section 76.1506 Carriage of television broadcast signals: We estimate there are 10 OVS operators, each with an estimated average number of 6 broadcast stations in each OVS operator's area of carriage. We estimated the average burden to broadcast stations for each election for must-carry or retransmission consent to be 2 hours per election; therefore 10 × 6 × 2 hours = 120 hours. The estimated annual recordkeeping burden for OVS operators to maintain list of broadcast stations carried in fulfillment of must-carry requirements is 4 hours per OVS operator; therefore 10 × 4 = 40 hours. The estimated annual number of written requests received by OVS operators is 30 per OVS operator; therefore 10 × 30 = 300. The burden for completing written requests: .25 hours per request; therefore 10 × 30 × .25 = 75 hours. The burden to OVS operators to respond to requests: .25 hours per request; therefore 10 × 30 × .25 = 75 hours.

Section 76.1508 Network non-duplication, Section 76.1509 Syndicated program exclusivity: We estimated number of notices to be filed by television broadcast stations in order to notify OVS operators of exclusive or non-duplication rights being exercised is 6 stations in each OVS operator's area of carriage × 20 estimated annual notifications × 10 OVS operators = 1,200. The burden to television stations to make notifications is estimated to be .5 hours per notice; therefore 1,200 × .5 = 600 hours. We estimate the annual number of notices filed by programming providers to notify OVS operators that the sports exclusivity rights claimed are invalid to be 100. The burden to programming providers to make notifications is estimated to be .5 hours per notice; therefore 100 × .5 hours = 50 hours. The burden for each OVS operator to make notifications available to all programming providers on their systems: 1 hour per notification × 1,100 occurrences = 1,100 hours.

Section 76.1513 Dispute resolution: We estimate there will be 20 initial notices filed by complainants annually as well as 20 defendants' responses to notices filed. The average burden for each notice and response is estimated to be 4 hours apiece; therefore 40 × 4 = 160 hours. We estimate that the 20 annual notices will result in the initiation of 10 dispute cases. The average burden for complainants and defendants for undergoing all aspects of the dispute case is estimated to be 25 hours per case; therefore 20 (10 complainants + 10 defendants) × 25 = 500 hours.

Total Annual Burden to respondents: 4,570 hours, as calculated above.

Estimated Costs to Respondents: Section 76.1502 Certification: Costs of stationery, diskettes, and postage at $10 for 14 Form 1275 filings/refilings sent to the Commission and all applicable local communities = $140. Costs of stationery and postage at $2 apiece for 28 sets of opposition filings = $56.

Section 76.1503 Carriage of video programming providers on open video systems: Costs of stationery and postage at $2 apiece for (10 Notices of Intent × 45 entities) + 250 requests for additional information + 250 responses to requests for additional information = $1,900.

Section 76.1504 Rates, terms and conditions of carriage on open video systems: Costs of stationery and postage at $2 apiece for 50 rate complaints + 50 rate justifications = $200.

Section 76.1506 Carriage of television broadcast signals: Costs of stationery and postage at $2 apiece for 60 carriage elections + 300 requests for lists + 300 provisions of lists = $1,320.

Section 76.1508 Network non-duplication, Section 76.1509 Syndicated program exclusivity: Costs of stationery and postage at $2 apiece for 1,200 notifications to OVS operators + 100 notifications of invalid rights claimed + 1,100 OVS operator notifications to programming providers = $4,800.

Section 76.1513 Dispute resolution: Costs of stationery and postage at $2 apiece for 20 notices + 20 responses to notices = $80. Costs of stationery and postage at $10 apiece for 10 complainants in dispute cases + 10 defendants in dispute cases = $200. $80 + $200 = $280.

Total Annual Cost to respondents: $8,696 as calculated above.

Needs and Uses: The information collections contained herein, which are necessary to implement the statutory provisions for Open Video Systems contained in the Telecommunications Act of 1996, have been previously approved by OMB under OMB control number 3060–0700. The following summary addresses only changes that have been adopted by the Commission in its *Fourth Report and Order.*

I. Introduction

1. On February 8, 1996, the Telecommunications Act of 1996 added Section 653 to the Communications Act of 1934, establishing open video systems as a new framework for entry into the video programming marketplace. Subsequently, the Commission adopted a series of orders prescribing rules and policies governing the establishment and operation of open video systems. The Commission has 10 calendar days from receipt of a complete FCC Form 1275 to issue an order approving or disapproving the certification. Upon receipt of a complete FCC Form 1275, the Commission will

publish a notice of the filing in the Daily Digest and post the filing on the Commission's Internet site. Comments or oppositions to the certification must be received by the Office of the Secretary within five days of the applicant's filing and must be served upon the applicant. The FCC Form 1275 will be deemed approved if the Commission does not disapprove the filing within the 10 calendar day time period. If the Commission disapproves the FCC Form 1275, the applicant may file a revised FCC Form 1275 or refile its original submission with a statement addressing the issues in dispute as stated in our order disapproving the filing.

2. Based on the experiences of recent open video system certification proceedings, we believe that certain modifications to the open video system procedures will benefit both the parties and the Commission. The intent of this *Fourth Report and Order* is to revise our procedures for both the filing of certification applications and the filing of comments and oppositions to provide the most efficient processing of applications for certification, given the limited 10-day statutory deadline for deciding certification applications.

3. Section 553 of the Administrative Procedures Act (''APA'') provides that an agency must provide notice of proposed rules in the **Federal Register** and afford an opportunity for interested persons to present their views. However, rules of ''agency organization, procedure, or practice'' are exempted from the APA's notice and comment requirement. We find that the changes in the Commission's open video system procedures proposed in this *Fourth Report and Order* fit within this exception because they are purely ministerial and do not alter the rights of interested parties. The purpose of these changes is to organize the Commission's internal procedures to provide for a more efficient processing of applications for certification. Accordingly, we issue this *Fourth Report and Order* without providing for a prior notice and comment period.

II. Certification Application

4. To date, certain certification applications that were submitted were found to be improperly filed with the Commission because the accompanying diskettes were not properly formatted. Parties are reminded that all certification applications must be filed on 3.5 diskettes formatted in an IBM compatible form using Wordperfect 5.1 for Windows and Excel 4.0 software. Attachments are part of the application package and, therefore, are subject to the same diskette requirements as the application, unless technologically infeasible. In addition, we remind parties that a hard copy and a diskette copy of the FCC Form 1275 and all attachments must be filed with both the Office of the Secretary and the Office of the Bureau Chief, Cable Services Bureau. In order to ensure the prompt delivery of the application and related pleadings to the staff person responsible for its review, parties are required to attach a cover sheet to the filing and related pleadings indicating that the submission is either an open video system certification application or related pleadings. Specifically, for an open video system certification application, the only wording on this cover sheet shall be ''Open Video System Certification Application'' and ''Attention: Cable Services Bureau.'' Similarly, for pleadings related to an open video system application, the only wording on this cover sheet shall be ''Open Video System Certification Application Comments'' and ''Attention: Cable Services Bureau.'' In either case, the wording shall be located in the center of the page and should be in letters at least ½ inch in size. For the purpose of open video system certification applications and related pleadings, we are also modifying our mailing address by requiring applications to be filed with the Office of the Bureau Chief, Cable Services Bureau as well as with the Office of the Secretary. Parties shall include the words ''open video systems'' on their mailing envelopes.

III. Filing Comments or Oppositions

5. In several instances, comments or oppositions filed with the Office of the Secretary were not also filed with, or served on, the Cable Services Bureau. Due to the short review period for certification applications, we now require parties wishing to respond to an FCC Form 1275 filing to submit comments or oppositions simultaneously to the Office of the Secretary and the Bureau Chief, Cable Services Bureau. Comments will not be considered timely filed unless filed with both offices. Untimely filed comments will not be deemed properly filed, and will not be considered by the Commission.

IV. Calculation of Response Period

6. Under the current rule, comments or oppositions must be filed within five days of the applicant's filing. The Commission has 10 calendar days from receipt of a complete FCC Form 1275 to issue an order approving or disapproving the certification. Intermediate holidays are not counted in determining the commenters' five-day response period, but are counted in determining the Commission's review period. These two rules, taken together, could lead to a situation where the Commission's order could be due on the same day that comments are due, effectively denying the Commission an opportunity to review the comments in rendering its decision.

7. Accordingly, in this *Fourth Report and Order* we now modify this rule to provide that comments or oppositions must be received by the Office of the Secretary and the Bureau Chief, Cable Services Bureau within five calendar days of the applicant's filing and served upon the applicant. Intermediate holidays (e.g. Saturday, Sunday, and other officially recognized federal holidays) will be counted in determining the due date for filing comments and oppositions. If, after making the necessary calculations, the due date for filing comments falls on a holiday, comments shall be filed on the next business day before noon, unless the nearest business day precedes the fifth calendar day following a filing, in which case the comments will be due on the preceding business day. We note that this modification of our computation of time regulations applies solely to the open video system certification process.

V. Certification Denials

8. If the Commission denies certification to an applicant, the applicant may file a revised FCC Form 1275 or refile its original submission with a statement addressing the issues in dispute as stated in our order disapproving the filing. Applicants to operate an open video system must serve such refilings on any objecting party from the previous proceeding and on all local communities in which the applicant intends to operate. The Commission will consider any revised or refiled FCC Form 1275 to be a new proceeding. Commenters from the original proceeding must refile their original comments if they think such comments should be considered in the subsequent proceeding. All persons, however, remain free to file new comments in response to a refiled FCC Form 1275.

VI. Channel Allocation and Carriage Dispute Resolution Proceedings

9. In order to commence the channel allocation process, an operator is required to file a Notice of Intent with the Commission. The Commission then releases the Notice of Intent to the public. As part of that release, the Cable

Services Bureau is required to publish the Notice on the Internet. In order to ensure the prompt delivery of such notices to the staff persons responsible for their review, we now require parties to include the word ''open video systems'' on their mailing envelopes. Parties are also now required to attach a cover sheet to the filing indicating that the submission is an Open Video System Notice of Intent. Specifically, for a Notice of Intent, the only wording on this cover sheet shall be ''Open Video System Notice of Intent'' and ''Attention: Cable Services Bureau.'' This wording shall be located in the center of the page and should be in letters at least ½ inch in size. Parties shall include the words ''open video systems'' on their mailing envelopes. Parties shall submit the Notice of Intent and related pleadings simultaneously to the Office of the Secretary and the Bureau Chief, Cable Services Bureau.

10. Additionally, pursuant to Section 653(a)(2) of the 1996 Telecommunications Act, the Commission has the authority to resolve disputes regarding open video system channel carriage. In order to conform our procedures for the filing of such complaints with our procedures for other open video system matters, parties are now required to include the words ''open video systems'' on their mailing envelopes. Parties are also now required to submit the complaint and materials related to these proceedings simultaneously to the Office of the Secretary and the Office of the Bureau Chief, Cable Services Bureau. Such pleadings must include a cover sheet indicating that the submission is either an Open Video System Channel Carriage Complaint or related pleading. In either case, the only wording on this cover sheet shall be ''Open Video System Channel Carriage Dispute Resolution'' and ''Attention: Cable Services Bureau.'' This wording shall be located in the center of the page and should be in letters at least ½ inch in size.

VII. Paperwork Reduction Act of 1995 Analysis

11. The requirements adopted in this *Fourth Report and Order* have been analyzed with respect to the Paperwork Reduction Act of 1995 (the ''PRA'') and found to impose modified information collection requirements on the public. Implementation of any modified requirement will be subject to approval by the Office of Management and Budget (''OMB'') as prescribed by the PRA. The Commission, as part of its continuing effort to reduce paperwork burdens, invites the general public and other Federal agencies to comment on the information collections contained in this *Fourth Report and Order* as required by the PRA. Comments should address: (1) Whether the proposed collection of information is necessary for the proper performance of the functions of the Commission, including whether the information shall have practical utility; (2) the accuracy of the Commission's burden estimates; (3) ways to enhance the quality, utility, and clarity of the information collected; and, (4) ways to minimize the burden of the collection of information on the respondents, including the use of automated collection techniques or other forms of information technology.

12. Written comments must be submitted by the Office of Management and Budget on the proposed and/or modified information collections on or before July 14, 1997. A copy of any comments on the information collections contained herein should be submitted to Dorothy Conway, Federal Communications Commission, Room 234, 1919 M Street, NW., Washington, DC 20554, or via the Internet to dconway@fcc.gov. For additional information concerning the information collections contained herein contact Dorothy Conway at 202–418–0217, or via the Internet at dconway@fcc.gov.

VIII. Ordering Clauses

13. Accordingly, *it is ordered* that, pursuant to Section 4(i), 4(j), 303(r), and 653 of the Communications Act of 1934, as amended, 47 U.S.C. §§ 154(i), 154(j), 303(r) and 573 of the rules, requirements and policies discussed in this order *are adopted* and Section 76.1502(e) of the Commission's rules, 47 CFR § 76.1502 *is amended* as set forth below.

14. *It is further ordered* that the requirements and regulations established in this decision shall become effective upon approval by OMB of the new information collection requirements adopted herein, but no sooner than June 12, 1997.

List of Subjects in 47 CFR Parts 1 and 76

Cable television.

Federal Communications Commission

William F. Caton,

Acting Secretary.

Rule Changes

Accordingly Parts 1 and 76 of Title 47 are amended as follows:

PART 1—PRACTICE AND PROCEDURE

1. The authority citation for Part 1 continues to read as follows:

Authority: 47 U.S.C. 151, 154, 207, 303 and 309(j).

2. Section 1.4 is amended by revising paragraphs (g), (j), and (k) to read as follows:

§ 1.4 Computation of time.

* * * * *

(g) Unless otherwise provided (e.g., §§ 1.773 and 76.1502(e)(1) of this chapter), if the filing period is less than 7 days, intermediate holidays shall not be counted in determining the filing date.

* * * * *

(j) Unless otherwise provided (e.g. § 76.1502(e) of this chapter) if, after making all the computations provided for in this section, the filing date falls on a holiday, the document shall be filed on the next business day. *See* paragraph (e)(1) of this section.

(k) Where specific provisions of part 1 conflict with this section, those specific provisions of part 1 are controlling. *See*, e.g.,§§ 1.45(d), 1.773(a)(3) and 1.773(b)(2). Additionally, where § 76.1502(e) of this chapter conflicts with this section, those specific provisions of § 76.1502 are controlling. *See* e.g. 47 CFR 76.1502(e).

PART 76—CABLE TELEVISION SERVICE

3. The authority citation for Part 76 continues to read as follows:

Authority: 47 U.S.C. 151, 152, 153, 154, 301, 302, 303, 303a, 307, 308, 309, 312, 315, 317, 325, 503, 521, 522, 531, 532, 533, 534, 5353, 536, 537, 543, 544, 544a, 545, 548, 552, 554, 556, 558, 560, 561, 571, 572, 573.

4. Section 76.1502 is amended by revising paragraphs (d) and (e), and adding new paragraph (f) to read as follows:

§ 76.1502 Certification.

* * * * *

(d) Parties are required to attach a cover sheet to the filing indicating that the submission is an open video system certification application. The only wording on this cover sheet shall be ''Open Video System Certification Application'' and ''Attention: Cable Services Bureau.'' This wording shall be located in the center of the page and should be in letters at least ½ inch in size. Parties shall also include the words ''open video systems'' on their mailing envelope.

(e) (1) Comments or oppositions to a certification must be filed within five calendar days of the Commission's receipt of the certification and must be served on the party that filed the certification. If, after making the necessary calculations, the due date for

filing comments falls on a holiday, comments shall be filed on the next business day before noon, unless the nearest business day precedes the fifth calendar day following a filing, in which case the comments will be due on the preceding business day. For example, if the fifth day falls on a Saturday, then the filing would be due on that preceding Friday. However, if the fifth day falls on Sunday, then the filing will be due on the next day, Monday, before noon (or Tuesday, before noon if the Monday is a holiday).

(2) Parties wishing to respond to a FCC Form 1275 filing must submit comments or oppositions with the Office of the Secretary and the Bureau Chief, Cable Services Bureau. Comments will not be considered properly filed unless filed with both of these Offices. Parties are required to attach a cover sheet to the filing indicating that the submission is a pleading related to an open video system application, the only wording on this cover sheet shall be ''Open Video System Certification Application Comments.'' This wording shall be located in the center of the page and should be in letters at least ½ inch in size. Parties shall also include the words ''open video systems'' on their mailing envelopes.

(f) If the Commission does not disapprove the certification application within ten days after receipt of an applicant's request, the certification application will be deemed approved. If disapproved, the applicant may file a revised certification or refile its original submission with a statement addressing the issues in dispute. Such refilings must be served on any objecting party or parties and on all local communities in which the applicant intends to operate. The Commission will consider any revised or refiled FCC Form 1275 to be a new proceeding and any party who filed comments regarding the original FCC Form 1275 will have to refile their original comments if they think such comments should be considered in the subsequent proceeding.

5. Section 76.1503 is amended by revising paragraph (b)(1) introductory text to read as follows:

§ 76.1503 Carriage of video programming providers on open video systems.

* * * * *

(b) * * *

(1) *Notification.* An open video system operator shall file with the Secretary of the Federal Communications Commission a ''Notice of Intent'' to establish an open video system, which the Commission will release in a Public Notice. Parties are required to attach a cover sheet to the filing indicating that the submission is an Open Video System Notice of Intent. The only wording on this cover sheet shall be ''Open Video System Notice of Intent'' and ''Attention: Cable Services Bureau.'' This wording shall be located in the center of the page and should be in letters at least ½ inch in size. Parties shall also include the words ''open video systems'' on their mailing envelopes. Parties must submit copies of the Notice of Intent with the Office of the Secretary and the Bureau Chief, Cable Services Bureau. The Notice of Intent shall include the following information:

* * * * *

6. Section 76.1513 is amended by adding new paragraphs (d)(8) and (d)(9) to read as follows:

§ 76.1513 Dispute resolution.

* * * * *

(d) * * *

(8) Parties are required to submit the complaint and materials related to these proceedings simultaneously to the Office of the Secretary and the Bureau Chief, Cable Services Bureau.

(9) Pleadings must include a cover sheet indicating that the submission is either an Open Video System Channel Carriage Complaint or related pleading. In either case, the only wording on this cover sheet shall be ''Open Video System Channel Carriage Dispute Resolution'' and ''Attention: Cable Services Bureau.'' This wording shall be located in the center of the page and should be in letters at least ½ in size. Parties shall also include the words ''open video systems'' on their mailing envelopes.

* * * * *

[FR Doc. 97–11973 Filed 5–12–97; 8:45 am]

BILLING CODE 6712–01–P

FEDERAL COMMUNICATIONS COMMISSION

47 CFR Parts 2 and 15

[ET Docket No. 96–8; FCC 97–114]

Spread Spectrum Transmitters

AGENCY: Federal Communications Commission.

ACTION: Final rule.

SUMMARY: By this *Report and Order*, the Commission amends its regulations regarding the unlicensed operation of spread spectrum systems in the 902–928 MHz (''915 MHz''), 2400–2483.5 MHz (''2450 MHz''), and 5725–5850 MHz (''5800 MHz'') bands, as proposed in the *Notice of Proposed Rule Making* (''*NPRM*'') in this proceeding. These amendments permit the use of high gain directional antennas for systems operating as fixed, point-to-point stations in the 2450 MHz and 5800 MHz bands. They also reduce the number of hopping channels for frequency hopping systems operating in the 915 MHz band. In addition, these amendments clarify existing regulations, codify existing policies into the rules, and update the definitions. These amendments will facilitate the growth of spread spectrum systems by enabling and encouraging practical applications for these systems.

DATES: Effective June 12, 1997.

ADDRESSES: Federal Communications Commission, 1919 M Street, N.W., Washington, D.C. 20554.

FOR FURTHER INFORMATION CONTACT: John A. Reed, Office of Engineering and Technology, (202) 418–2455.

SUPPLEMENTARY INFORMATION: This is a summary of the Commission's *Report and Order* in ET Docket No. 96–8, FCC 97–114, adopted April 3, 1997, and released April 10, 1997. The complete text of this *Report and Order* is available for inspection and copying during normal business hours in the FCC Reference Center (Room 239), 1919 M Street, NW., Washington, DC, and also may be purchased from the Commission's copy contractor, International Transcription Services, Inc., (202) 857–3800, 2100 M Street, NW, Suite 140, Washington, D.C. 20037.

Summary of the Report and Order

1. In the *Report and Order* (''Order''), the Commission amended Parts 2 and 15 of its regulations regarding unlicensed spread spectrum transmission systems operating in the 915 MHz, 2450 MHz and 5800 MHz bands. Spread spectrum systems use special modulation techniques that spread the energy of the signal being transmitted over a very wide bandwidth. This spreading reduces the power density of the signal at any frequency within the transmitted bandwidth, thereby reducing the probability of causing interference to other signals occupying the same spectrum. The reversal of the signal spreading process in the receiver enables the suppression of strong undesired signals.

2. The *Order* eliminates the limit on directional gain antennas for spread spectrum transmitters operating in the 2450 MHz and the 5800 MHz bands. The operation of these systems is limited to fixed, point-to-point systems. While transmitters in the 5800 MHz band are not required to reduce output power when the directional antenna

gain is increased, the maximum permitted output power of spread spectrum transmitters in the 2450 MHz band is decreased by 1 dB for every 3 dB that the directional antenna gain exceeds 6 dBi. This decrease in the maximum transmitter output power is necessary to reduce the potential for harmful interference to mobile stations operating in the 2450 MHz band, especially mobile licensees in the Public Safety Radio Services under Part 90 of the rules and other Part 15 devices. The waivers previously issued to six companies to permit the manufacture of systems at 2450 MHz and 5800 MHz employing unlimited antenna gain without a reduction in transmitter output power are no longer in effect upon 30 days from the publication of these final rules in the Federal Register. Any system manufactured after that date must comply with the regulations adopted herein.

3. The increase in directional antenna gain will permit users of spread spectrum systems to establish radio links without the delays and costs associated with formal frequency coordination and licensing. Such uses may include backbone connections to the new unlicensed NII system; intelligent transportation system communications links; high speed Internet connections for schools, hospitals, and government offices; energy utility applications; PCS and cellular backbone connections; and T–1 common carrier links in rural areas. However, the operators of these systems are reminded that the operation of Part 15 devices is subject to the conditions that any received interference must be accepted and that harmful interference may not be caused to other radio services. Thus, the Commission strongly recommends that operators of systems that provide critical communication services should exercise due caution to determine if there are any nearby radio services that could be affected by their communications.

4. In the *Order*, the Commission also reduces the minimum number of non-contiguous channels that must be employed by a frequency hopping spread spectrum system in the 915 MHz band from 50 channels to 25 channels. This reduction in the number of hopping channels will enable frequency hopping spread spectrum systems to avoid operations on frequencies used by wideband, multilateration LMS systems operating under Part 90 of the rules, thereby reducing mutual interference problems. Frequency hopping spread spectrum systems that employ less than 50 hopping channels must employ channel bandwidths of at least 250 kHz; shall not exceed an average time of occupancy on any hopping frequency of 0.4 seconds in any 10 second period; and shall operate with a maximum peak transmitter output power of 250 mW with a directional antenna gain of 6 dBi. Higher antenna gain is permitted only with a corresponding decrease in transmitter output power.

5. In the *Order*, the Commission made several amendments to the rules to clarify existing regulations, codify existing policies into the rules, and update the definitions. These amendments to the rules are summarized below:

—The spectral power density limit for direct sequence systems is modified to indicate that the standard applies to the peak spectral power density, and the measurement procedure employed for measuring spectral power density where the spectrum line spacing can not be resolved is corrected;

—The definition of a direct sequence system is modified, as proposed in the *NPRM*;

—The definition of a pseudorandom sequence and a frequency hopping system is modified, as proposed in the *NPRM*;

—The rules are clarified to permit short duration transmissions under the provisions for frequency hopping systems provided the systems are capable of complying with all of the spread spectrum standards, including the definition of a frequency hopping systems and the eventual distribution of the transmissions over the minimum number of hopping channels;

—An alternative method of measuring the processing gain of a direct sequence system, based on receiver jamming margin, is incorporated into the rules;

—The limits on unwanted emissions are simplified, as proposed in the *NPRM*;

—The existing policy permitting the coordination of a frequency hopping system when the system incorporates intelligence that permits it to recognize other users within the spectrum band so that it individually and independently chooses and adapts its hopping sequence to avoid hopping on occupied channels is codified into the rules;

—The prohibition against the marketing and use of external radio frequency power amplifiers that are not certified as part of the system and the prohibition against the marketing and use of antenna/transmitter combinations that are not certified as a system is clarified in the rules;

—The applicability of the RF guidelines for human exposure, as specified in Section 1.1307 of the rules, to Part 15 devices is noted; and

—The prohibition against cross-border operation into Mexico or Canada and the applicability of the non-interference rules to Canadian or Mexican radio operations are noted.

Final Regulatory Flexibility Analysis

6. As required by Section 603 of the Regulatory Flexibility Act, 5 U.S.C. 603 (RFA), Initial Regulatory Flexibility Analysis (IRFA) was incorporated in the *Notice of Proposed Rule Making* (''*NPRM*'') in ET Docket No. 96–8.[1] The Commission sought written public comments on the proposals in the *NPRM* including the IRFA. The Commission's Regulatory Flexibility Analysis (FRFA) in this Report and Order conforms to the RFA, as amended by the Contract with America Advancement Act of 1996 (CWAAA), Public Law 104–121, 110 Stat. 847 (1996).[2]

7. *Need for and Objective of the Rule.* The objective is to amend Parts 2 and 15 of the rules regarding the operation of spread spectrum transmission systems in the 902–928 MHz, 2400–2483.5 MHz and 5725–5850 MHz bands. The Commission is also adopting a number of amendments to the spread spectrum regulations to clarify the existing regulations, to codify existing policies into the rules, and to update the current definitions. These changes to the rules will facilitate the growth of the spread spectrum industry by enabling and encouraging practical applications for these products. The new rules will expand the ability of equipment manufacturers to develop spread spectrum systems for unlicensed use that provide users with the flexibility to establish radio links without the delays and costs associated with formal frequency coordination and licensing. Such uses may include intelligent transportation system communications links; high speed Internet connections for schools, hospitals, and government offices; energy utility applications; PCS and cellular backbone connections; and T–1 common carrier links in rural areas. The new rules will also permit frequency hopping spread spectrum systems and wideband, multilateration Location Monitoring Service (LMS) systems to operate within the same frequency band with decreased potential for mutual interference problems.

[1] Amendment of Parts 2 and 15 of the Commission's Rules Regarding Spectrum Transmitters, 11 FCC Rcd 3068 (1996), 61 FR 15206, April 5, 1996.

[2] Subtitle II of the CWAAA is ''The Small Business Regulatory Enforcement Fairness Act of 1996'' (SBREFA), codified at 5 U.S.C. 601 et seq.

8. *Summary of Significant Issues Raised by the Public Comments in Response to the Initial Regulatory Flexibility Analysis.* Only one commenter, Adtran submitted comments that were specifically in response to the IRFA. It agrees with the Commission's assessment that the changes made in the ''Order'' will have no negative impact on small entities. In general, commenters were supportive of the Commission's proposed changes to the rule. The Commission also received numerous suggestions for improving or modifying the rules. In response to a Petition for Rule Making filed by WMC, the Commission is eliminating the limit on directional gain antennas for spread spectrum transmitters operating in the 2450 MHz and 5800 MHz bands. For spread spectrum systems operating in the 2450 MHz band, the Commission is implementing its proposal to require that the output power for the transmitter be reduced by 1 dB for every 3 dB that the directional gain exceeds 6 dBi. In addition, in response to a Petition for Rule Making filed by SpectraLink, the Commission is reducing, from 50 to 25, the minimum number of channels required for frequency hopping spread spectrum systems operating in the 915 MHz band.

9. *Description and Estimate of the Number of Small Entities Subject to Which the Rules Apply.* The RFA generally defines the term ''small business'' as having the same meaning as the term ''small business concern'' under the Small Business Act, 15 U.S.C. 632. Based on that statutory provision, we will consider a small business concern one which: (1) Is independently owned and operated; (2) is not dominant in its field of operation; and (3) satisfies any additional criteria established by the Small Business Administration (SBA). The RFA SBREFA provisions also apply to nonprofit organizations and to governmental organizations. Since the Regulatory Flexibility Act amendments were not in effect until the record in this proceeding was closed, the Commission was unable to request information regarding the number of small businesses that manufacture spread spectrum transmitters and is unable at this time to determine the number of small businesses that would be affected by this action. However, the Commission believes that the amendments being adopted in this proceeding clarify permissible methods of operation. With the exception of limits on directional antenna gain versus transmitter output power for systems in the 2450 MHz band, these amendments should not impact any existing equipment designs. The only parties that would be impacted by the requirement to reduce transmitter output power when high antenna gains are employed are WMC, Cylink, ACS, MDS, Larus, and Wi-LAN Inc. These companies are currently producing this equipment under the conditions of a temporary waiver that permits them to manufacture fixed, point-to-point spread spectrum systems in the 2450 MHz band without a limit on directional antenna gain. All of these companies were notified at the time the waivers were granted that the waivers would expire upon the date of final action in this proceeding.

10. The rules adopted in this *Order* will apply to any entities manufacturing equipment for unlicensed Part 15 spread spectrum transmitters. The Commission has not developed a definition of small entities applicable to manufacturers of spread spectrum transmitters. Therefore, the applicable definition of small entity is the definition under the Small Business Administration (''SBA'') rules applicable to manufacturers of ''Radio and Television Broadcasting and Communications Equipment''. According to the SBA's regulations, radio frequency manufacturers must have 750 or fewer employees in order to qualify as a small business.[3] Census Bureau data indicates that there are 858 companies in the United States that manufacture radio and television broadcasting and communications equipment, and that 778 of these firms have fewer than 750 employees and would be classified as small entities.[4]

11. *Description of Projected Reporting, Recordkeeping and Other Compliance Requirements.* Part 15 spread spectrum transmitters are already required to be authorized under the Commission's certification procedure as a prerequisite to marketing and importation. The changes proposed in this proceeding would not change any of the current reporting or recordkeeping requirements. Further, the proposed regulations add permissible methods of operation and would not require the modification of any existing products, except for those currently operating under limited waivers that expire upon adoption of this *Order.* These requirements include obtaining a grant of certification for the transmitter and meeting the emission limits specified in the rules.

12. Skills of an application examiner, radio technician or engineer will be needed to meet the requirements. In many cases the studies can be done by a radio technician or engineer. Certification applications are usually done by applications examiners. It is the responsibility of the manufacturer of the device to determine whether the device will comply with the RF radiation limits. This study can be done by calculation or measurement, depending upon the situation.

13. *Significant Alternatives and Steps Taken by Agency to Minimize Significant Economic Impact on a Substantial Number of Small Entities Consistent with Stated Objectives.* In response to concerns raised in comments filed in response to the *NPRM*, the Commission made several minor clarifying amendments to its proposals. However, there was only one issue raised in the comments that could have had a significant economic impact on the manufacturers of spread spectrum systems. In the *NPRM*, the Commission proposed to require that the 3 dB beamwidths of the high gain directional antennas employed with spread spectrum transmitters differ by no more than a factor of two between the vertical and horizontal planes.[5] Supporting comments were received from Adtran and Digital Wireless; however, Cushcraft, Cylink, the Part 15 Coalition and WMC believe that the requirement is an unnecessary regulation. Cushcraft believes that the majority of antennas already meet this criterion. Cylink states that this proposal may prevent applications that require a different antenna design, such as communications to off-shore platforms. The Commission agrees with the latter commenters that this portion of its proposal is unnecessary.

14. *Commission's Outreach Efforts to Learn of and Respond to the Views of Small Entities pursuant to SBREFA 5 U.S.C. 609.* During the course of this proceeding Office of Engineering and Technology staff members have had numerous ex parte meetings with representatives from Metricom, Inc., Cylink Corporation, Mulcay Consulting Association, and Digital Wireless Corporation.

15. *Report to Congress.* The Commission shall send a copy of this Final Regulatory Flexibility Analysis, along with this Report and Order, in a report to Congress pursuant to the Small Business Regulatory Enforcement Fairness Act of 1996, 5 U.S.C. 801(a)(1)(A). A copy of this FRFA will

[3] *See* 13 CFR 121.201, Standard Industrial Classification (SIC) Code 3663.

[4] *See* U.S. Department of Commerce, *1992 Census of Transportation, Communications and Utilities* (issued May 1995), SIC category 3663.

[5] *See NPRM* at para. 17.

also be published in the **Federal Register**.

List of Subjects

47 CFR Part 2

Communications equipment, Radio.

47 CFR Part 15

Communications equipment, Radio, Reporting and recordkeeping requirements.

Federal Communications Commission

William F. Caton,

Acting Secretary.

Rule Changes

Title 47 of the Code of Federal Regulations, Parts 2 and 15, are amended as follows:

PART 2—FREQUENCY ALLOCATIONS AND RADIO TREATY MATTERS; GENERAL RULES AND REGULATIONS

1. The authority citation for Part 2 continues to read as follows:

Authority: Sec. 4, 302, 303, and 307 of the Communications Act of 1934, as amended, 47 U.S.C. Sections 154, 302, 303, and 307, unless otherwise noted.

2. Section 2.1, paragraph (c), is amended by removing the definition for ''Pseudorandom sequence'', by revising the definition for ''Direct Sequence Systems'', and by revising the definition for ''Frequency Hopping Systems'' and placing it in alphabetical order to read as follows:

§ 2.1 Terms and definitions.

* * * * *

(c) * * *

* * * * *

Direct Sequence Systems. A spread spectrum system in which the carrier has been modulated by a high speed spreading code and an information data stream. The high speed code sequence dominates the ''modulating function'' and is the direct cause of the wide spreading of the transmitted signal.

* * * * *

Frequency Hopping Systems. A spread spectrum system in which the carrier is modulated with the coded information in a conventional manner causing a conventional spreading of the RF energy about the frequency carrier. The frequency of the carrier is not fixed but changes at fixed intervals under the direction of a coded sequence. The wide RF bandwidth needed by such a system is not required by spreading of the RF energy about the carrier but rather to accommodate the range of frequencies to which the carrier frequency can hop. The test of a frequency hopping system is that the near term distribution of hops appears random, the long term distribution appears evenly distributed over the hop set, and sequential hops are randomly distributed in both direction and magnitude of change in the hop set.

* * * * *

PART 15—RADIO FREQUENCY DEVICES

1. The authority citation for Part 15 continues to read as follows:

Authority: 47 U.S.C. 154, 302, 303, 304, 307 and 544A.

2. Section 15.3 is amended by adding a new paragraph (cc), to read as follows:

§ 15.3 Definitions.

* * * * *

(cc) *External radio frequency power amplifier.* A device which is not an integral part of an intentional radiator as manufactured and which, when used in conjunction with an intentional radiator as a signal source, is capable of amplifying that signal.

3. A new § 15.204 is added, to read as follows:

§ 15.204 External radio frequency power amplifiers and antenna modifications.

(a) Except as otherwise described in paragraph (b) of this section, no person shall use, manufacture, sell or lease, offer for sale or lease (including advertising for sale or lease), or import, ship, or distribute for the purpose of selling or leasing, any external radio frequency power amplifier or amplifier kit intended for use with a Part 15 intentional radiator.

(b) A transmission system consisting of an intentional radiator, an external radio frequency power amplifier, and an antenna, may be authorized, marketed and used under this part. However, when a transmission system is authorized as a system, it must always be marketed as a complete system and must always be used in the configuration in which it was authorized. An external radio frequency power amplifier shall be marketed only in the system configuration with which the amplifier is authorized and shall not be marketed as a separate product.

(c) Only the antenna with which an intentional radiator is authorized may be used with the intentional radiator.

4. Section 15.247 is amended by revising paragraphs (a)(1)(i), (b), (c), (d), and (e), and by adding new paragraphs (g) and (h) before the note at the end of the section, to read as follows:

§ 15.247 Operation within the bands 902–928 MHz, 2400–2483.5 MHz, and 5725–5850 MHz.

(a) * * *

(1) * * *

(i) For frequency hopping systems operating in the 902–928 MHz band: if the 20 dB bandwidth of the hopping channel is less than 250 kHz, the system shall use at least 50 hopping frequencies and the average time of occupancy on any frequency shall not be greater than 0.4 seconds within a 20 second period; if the 20 dB bandwidth of the hopping channel is 250 kHz or greater, the system shall use at least 25 hopping frequencies and the average time of occupancy on any frequency shall not be greater than 0.4 seconds within a 10 second period. The maximum allowed 20 dB bandwidth of the hopping channel is 500 kHz.

* * * * *

(b) The maximum peak output power of the intentional radiator shall not exceed the following:

(1) For frequency hopping systems operating in the 2400–2483.5 MHz or 5725–5850 MHz band and for all direct sequence systems: 1 watt.

(2) For frequency hopping systems operating in the 902–928 MHz band: 1 watt for systems employing at least 50 hopping channels; and, 0.25 watts for systems employing less than 50 hopping channels, but at least 25 hopping channels, as permitted under paragraph (a)(1)(i) of this section.

(3) Except as shown in paragraphs (b)(3) (i), (ii) and (iii) of this section, if transmitting antennas of directional gain greater than 6 dBi are used the peak output power from the intentional radiator shall be reduced below the stated values in paragraphs (b)(1) or (b)(2) of this section, as appropriate, by the amount in dB that the directional gain of the antenna exceeds 6 dBi.

(i) Systems operating in the 2400–2483.5 MHz band that are used exclusively for fixed, point-to-point operations may employ transmitting antennas with directional gain greater than 6 dBi provided the maximum peak output power of the intentional radiator is reduced by 1 dB for every 3 dB that the directional gain of the antenna exceeds 6 dBi.

(ii) Systems operating in the 5725–5850 MHz band that are used exclusively for fixed, point-to-point operations may employ transmitting antennas with directional gain greater than 6 dBi without any corresponding reduction in transmitter peak output power.

(iii) Fixed, point-to-point operation, as used in paragraphs (b)(3)(i) and (b)(3)(ii) of this section, excludes the use of point-to-multipoint systems, omnidirectional applications, and multiple co-located intentional radiators

transmitting the same information. The operator of the spread spectrum intentional radiator or, if the equipment is professionally installed, the installer is responsible for ensuring that the system is used exclusively for fixed, point-to-point operations. The instruction manual furnished with the intentional radiator shall contain language in the installation instructions informing the operator and the installer of this responsibility.

(4) Systems operating under the provisions of this section shall be operated in a manner that ensures that the public is not exposed to radio frequency energy levels in excess of the Commission's guidelines. See § 1.1307(b)(1) of this chapter.

(c) In any 100 kHz bandwidth outside the frequency band in which the spread spectrum intentional radiator is operating, the radio frequency power that is produced by the intentional radiator shall be at least 20 dB below that in the 100 kHz bandwidth within the band that contains the highest level of the desired power, based on either an RF conducted or a radiated measurement. Attenuation below the general limits specified in § 15.209(a) is not required. In addition, radiated emissions which fall in the restricted bands, as defined in § 15.205(a), must also comply with the radiated emission limits specified in § 15.209(a) (see § 15.205(c)).

(d) For direct sequence systems, the peak power spectral density conducted from the intentional radiator to the antenna shall not be greater than 8 dBm in any 3 kHz band during any time interval of continuous transmission.

(e) The processing gain of a direct sequence system shall be at least 10 dB. The processing gain represents the improvement to the received signal-to-noise ratio, after filtering to the information bandwidth, from the spreading/despreading function. The processing gain may be determined using one of the following methods:

(1) As measured at the demodulated output of the receiver: the ratio in dB of the signal-to-noise ratio with the system spreading code turned off to the signal-to-noise ratio with the system spreading code turned on.

(2) As measured using the CW jamming margin method: a signal generator is stepped in 50 kHz increments across the passband of the system, recording at each point the generator level required to produce the recommended Bit Error Rate (BER). This level is the jammer level. The output power of the intentional radiator is measured at the same point. The jammer to signal ratio (J/S) is then calculated, discarding the worst 20% of the J/S data points. The lowest remaining J/S ratio is used to calculate the processing gain, as follows: Gp = (S/N) o + Mj + Lsys, where Gp = processing gain of the system, (S/N) o = signal to noise ratio required for the chosen BER, Mj = J/S ratio, and Lsys = system losses. Note that total losses in a system, including intentional radiator and receiver, should be assumed to be no more than 2 dB.

* * * * *

(g) Frequency hopping spread spectrum systems are not required to employ all available hopping channels during each transmission. However, the system, consisting of both the transmitter and the receiver, must be designed to comply with all of the regulations in this section should the transmitter be presented with a continuous data (or information) stream. In addition, a system employing short transmission bursts must comply with the definition of a frequency hopping system and must distribute its transmissions over the minimum number of hopping channels specified in this section.

(h) The incorporation of intelligence within a frequency hopping spread spectrum system that permits the system to recognize other users within the spectrum band so that it individually and independently chooses and adapts its hopsets to avoid hopping on occupied channels is permitted. The coordination of frequency hopping systems in any other manner for the express purpose of avoiding the simultaneous occupancy of individual hopping frequencies by multiple transmitters is not permitted.

* * * * *

Note: The following appendix will not appear in the Code of Federal Regulations.

Appendix—Measurement Procedure for Spread Spectrum Transmitters

Federal Communications Commission

Equipment Authorization Division, 7435 Oakland Mills Road, Columbia, MD 21046, Telephone: (301) 725–1585, Facsimile: (301) 344–2050

Guidance on Measurements for Direct Sequence Spread Spectrum Systems

Part 15 of the FCC Rules provides for operation of direct sequence spread spectrum transmitters. Examples of devices that operate under these rules include radio local area networks, cordless telephones, wireless cash registers, and wireless inventory tracking systems.

The Commission frequently receives requests for guidance as to how to perform measurements to demonstrate compliance with the technical standards for such systems. No formal measurement procedure has been established for determining compliance with the technical standards. Such tests are to be performed following the general guidance in Section 15.31 of the FCC Rules and using good engineering practice. The following provides information on the measurement techniques the Commission has accepted in the past for equipment authorization purposes. Alternative techniques may be acceptable upon consultation and approval by the Commission staff. The information is organized according to the pertinent FCC rule sections.

Section 15.31(m): This rule specifies the number of operating frequencies to be examined for tunable equipment.

Section 15.207: Power line conducted emissions. If the unit is AC powered, an AC power line conducted test is also required per this rule.

Section 15.247(a)(2): Bandwidth. Make the measurement with the spectrum analyzer's resolution bandwidth (RBW) = 100 kHz. In order to make an accurate measurement, set the span >> RBW.

Section 15.247(b): Power output. This is an RF conducted test. Use a direct connection between the antenna port of the transmitter and the spectrum analyzer, through suitable attenuation. Set the RBW > 6 dB bandwidth of the emission or use a peak power meter.

Section 15.247(c): Spurious emissions. The following tests are required :

(1) RF antenna conducted test: Set RBW = 100 kHz, Video bandwidth (VBW) > RBW, scan up through 10th harmonic. All harmonics/spurs must be at least 20 dB down from the highest emission level within the authorized band as measured with a 100 kHz RBW.

(2) Radiated emission test: Applies to harmonics/spurs that fall in the restricted bands listed in Section 15.205. The maximum permitted average field strength is listed in Section 15.209. A pre-amp (and possibly a high-pass filter) is necessary for this measurement. For measurements above 1 GHz, set RBW = 1 MHz, VBW = 10 Hz, Sweep: Auto. If the emission is pulsed, modify the unit for continuous operation, use the settings shown above, then correct the reading by subtracting the peak-average correction factor, derived from the appropriate duty cycle calculation. See Section 15.35(b) and (c).

Section 15.247(d): Power spectral density. Locate and zoom in on emission peak(s) within the passband. Set RBW = 3 kHz, VBW > RBW, sweep = (SPAN/3 kHz) e.g., for a span of 1.5 MHz, the sweep should be $1.5 \times 10^6 \div 3 \times 10^3 = 500$ seconds. The peak level measured must be no greater than +8 dBm. If external attenuation is used, don't forget to add this value to the reading. Use the following guidelines for modifying the power spectral density measurement procedure when necessary.

- For devices with spectrum line spacing greater than 3 kHz no change is required.
- For devices with spectrum line spacing equal to or less than 3 kHz, the resolution bandwidth must be reduced below 3 kHz until the individual lines in the spectrum are resolved. The measurement data must then be normalized to 3 kHz by summing the power of all the individual spectral lines

within a 3 kHz band (in linear power units) to determine compliance.

• If the spectrum line spacing cannot be resolved on the available spectrum analyzer, the noise density function on most modern conventional spectrum analyzers will directly measure the noise power density normalized to a 1 Hz noise power bandwidth. Add 34.8 dB for correction to 3 kHz.

• Should all the above fail or any controversy develop regarding accuracy of measurement, the Laboratory will use the HP 89440A Vector Signal Analyzer for final measurement unless a clear showing can be made for a further alternate.

Section 15.247(e): Processing Gain. The Processing Gain may be measured using the CW jamming margin method. Figure 1 shows the test configuration. The test consists of stepping a signal generator in 50 kHz increments across the passband of the system. At each point, the generator level required to produce the recommended Bit Error Rate (BER) is recorded. This level is the jammer level. The output power of the transmitting unit is measured at the same point. The Jammer to Signal (J/S) ratio is then calculated. Discard the worst 20% of the J/S data points. The lowest remaining J/S ratio is used when calculating the Processing Gain.

In a practical system, there are always implementation losses which degrade the performance below that of an optimal theoretical system of the same type. Losses occur due to non-optimal filtering, lack of equalization, LO phase noise, ''corner cutting in digital processing'', etc. Total losses in a system, including transmitter and receiver, should be assumed to be no more than 2 dB.

The signal to noise ratio for an *ideal* non-coherent receiver is calculated from:

(1) $Pe = \frac{1}{2}e^{(-\frac{1}{2}(S/N)o)}$

where :

Pe = probability of error (BER)

(S/N)o = the required signal to noise ratio at the receiver output for a given received signal quality

This is an example. You should use the equation (or curve) dictated by your demodulation scheme.

Ref.: Viterbi, A. J. *Principles of Coherent Communications,* (New York: McGraw-Hill 1966), Pg. 207 Using equation (1) shown above, calculate the signal to noise ratio required for your chosen BER. This value and the measured J/S ratio are used in the following equation to calculate the Processing Gain (Gp) of the system.

Gp=(S/N)o+Mj+Lsys

where:

(S/N)o = Signal to noise ratio

Mj = J/S ratio

Lsys = System losses.

Ref.: Dixon, R., *Spread Spectrum Systems* (New York: Wiley, 1984), Chapter 1.

BILLING CODE 6712–01–P

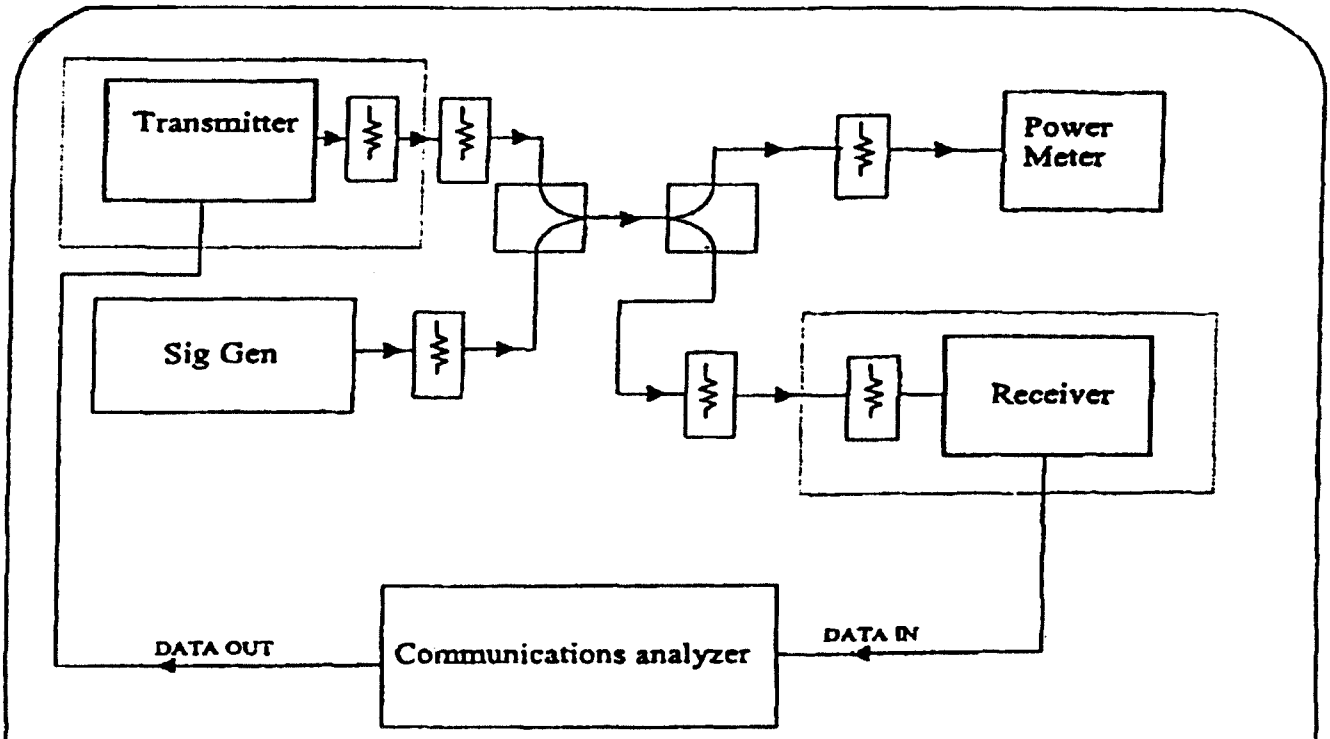

Jamming Test Setup
Figure 1

BILLING CODE 6712–01–C

Alternative Test Procedures

If antenna conducted tests cannot be performed on this device, radiated tests to show compliance with the various conducted requirements of Section 15.247 are acceptable. As stated previously, a pre-amp must be used in making the following measurements.

(1) Calculate the transmitter's peak power using the following equation:

$$E = \frac{\sqrt{30PG}}{d}$$

Where:

E is the measured maximum field strength in V/m utilizing the widest available RBW.

G is the numeric gain of the transmitting antenna over an isotropic radiator.

d is the distance in meters from which the field strength was measured.

P is the power in watts for which you are solving:

$$P = \frac{(Ed)^2}{30G}$$

(2) Measure the power spectral density as follows:

A. Tune the analyzer to the highest point of the maximized fundamental emission. Reset the analyzer to a RBW = 3 kHz, VBW > RBW, span = 300 kHz, sweep = 100 sec.

B. From the peak level obtained in (A), derive the field strength, E, by applying the appropriate antenna factor, cable loss, pre-amp gain, etc. Using the equation listed in (1), calculate a power level for comparison to the +8 dBm limit.

[FR Doc. 97–11584 Filed 5–12–97; 8:45 am]

BILLING CODE 6712–01–P

FEDERAL COMMUNICATIONS COMMISSION

47 CFR Part 76

[CS Docket No. 96–40; FCC 97–141]

Telecommunications Act of 1996

AGENCY: Federal Communications Commission.

ACTION: Interim rule.

SUMMARY: This Order establishes the enforcement date of the rule implementing Section 641 of the Communications Act regarding the scrambling of sexually explicit adult video service programming. Section 505 of the Telecommunications Act amends the Communications Act to add Section 641. In this Order, the Commission establishes that the rule implementing Section 641 will be enforced effective May 18, 1997.

DATES: 47 CFR 76.227 will be enforced effective May 18, 1997.

FOR FURTHER INFORMATION CONTACT: Meryl S. Icove, Cable Services Bureau, (202) 418–7200.

SUPPLEMENTARY INFORMATION: This is a synopsis of the Order in CS Docket No. 96–40, FCC 97–141, adopted and released on April 17, 1997 . The complete text of this Order is available for inspection and copying during normal business hours in the FCC Reference Center (room 239), 1919 M Street, NW., Washington, DC, and also may be purchased from the Commission's copy contractor, International Transcription Services, Inc. (''ITS Inc.'') at (202) 857–3800, 2100 M Street, NW., Suite 140, Washington, DC 20017.

Synopsis of Order

1. On February 8, 1996, the Telecommunications Act of 1996 (''1996 Act'') was enacted. Section 505 of the 1996 Act amends the Communications Act by adding a new Section 641, entitled ''Scrambling of Sexually Explicit Adult Video Service Programming.'' Section 641(a) requires that

[I]n providing sexually explicit adult programming or other programming that is indecent on any channel of its service primarily dedicated to sexually-oriented programming, a multichannel video programming distributor shall fully scramble or otherwise fully block the video and audio portion of such channel so that one not a subscriber to such channel or programming does not receive it.

Section 641(b) provides that:

[u]ntil a multichannel video programming distributor complies with the requirement set forth in subsection (a), the distributor shall limit the access of children to the programming referred to in that subsection by not providing such programming during the hours of the day (as determined by the Commission) when a significant number of children are likely to view it.

The Commission adopted an interim rule (61 FR 09648, March 11, 1996) implementing Section 505 and defining, on an interim basis, the hours of 6:00 am to 10:00 pm as those hours when a significant number of children are likely to view such programming. Order and interim rule in CS Docket No. 96–40, Implementation of Section 505 of the Telecommunications Act of 1996: Scrambling of Sexually Explicit Adult Video Service Programming, 61 FR 09648, March 11, 1996, 11 FCC Rcd 5386 (released March 5, 1996). Section 505 provides that these provisions take effect 30 days after the date of enactment of the 1996 Act, i.e., March 9, 1996. The Commission has not enforced Section 505 due to a temporary restraining order and a number of stays that were granted by the United States District Court for the District of Delaware.

2. Prior to the statute becoming effective the United States District Court for the District of Delaware issued a temporary restraining order enjoining the United States Government, including the Commission, from ''enforcing or implementing Section 505 of the Telecommunications Act of 1996 in any manner.'' The court's order stated that the temporary restraining order ''shall remain in force only until the hearing and determination by the district court of three judges of Plaintiff's Motion for Preliminary Injunction.'' *Playboy Entertainment Group, Inc.* v. *United States,* 918 F. Supp. 813 (D. Del. 1996). The Cable Services Bureau (''Bureau'') by public notice announced that the Commission would not enforce or implement Section 505 while the temporary restraining order was in effect. Public Notice, Report No. CS 96–17, DA 96–354 (Cable Services Bureau), released March 13, 1996, 11 FCC Rcd 10336 (1996).[1]

3. On November 8, 1996, a three judge panel of the United States District Court for the District of Delaware issued an order denying petitions for a preliminary injunction regarding Section 505, and thus lifted the temporary restraining order that was in effect. *Playboy Entertainment Group, Inc.* v. *United States,* 945 F. Supp. 772 (D. Del. 1996). Thereafter, the Bureau issued a public notice announcing that Section 505 of the Telecommunications Act, and its associated rules, were in effect. Public Notice, DA 96–1906 (Cable Services Bureau), released November 15, 1996.

4. The court, however, ordered that any enforcement of Section 505 was ''stayed pending the decision of the Court on plaintiffs' pending Motions to Stay'' the opinion of the court pending review by the Supreme Court. *Playboy Entertainment Group, Inc.* v. *United States,* Civil Action Nos. 96–94/96–107, November 15, 1996. The Bureau announced by public notice that the Commission would not enforce Section 505. Public Notice, DA 96–1915, (Cable Services Bureau), released November 18, 1996.

5. The three judge panel, on December 5, 1996, granted plaintiffs' motion to stay and ordered that any enforcement of Section 505 was ''stayed during the pendency of the [parties'] appeal'' to the Supreme Court. *Playboy Entertainment Group, Inc.* v. *United States,* Civil Action Nos. 96–94/96–107, December 5, 1996. On December 9, 1996, the Bureau issued a public notice announcing the court's decision and stating that Section 505 would remain unenforceable pending appeal to the Supreme Court. Public Notice, DA 96–2064 (Cable Services Bureau), released December 9, 1996.

6. On March 24, 1997, the Supreme Court affirmed the District Court's denial of the preliminary injunction. *Playboy Entertainment Group, Inc.* v. *United States,* 65 U.S.L.W. 3644, 3647,

[1] DA 96–354 and subsequent DA 96–1906, DA 96–1915, and DA 96–2064 were not published in the **Federal Register**.

1997 WL 128706 U.S. (Mar. 24, 1997). The time to seek rehearing of the Supreme Court's decision expired on April 18, 1997. Congress, prior to the above referenced judicial proceedings, provided that Section 641 would become effective with 30 days advance notice. Consistent with that initial schedule, the rules implementing Section 505 will be enforced effective May 18, 1997. We believe that this amount of time is reasonable given any previous uncertainty with respect to enforcement of this provision and that it will permit operators to comply, to the maximum extent feasible, with any relevant subscriber notice requirements.

7. Accordingly, *it is ordered that*, pursuant to Sections 4(i) and 641 of the Communications Act of 1934, as amended, 47 U.S.C. §§ 154(i), 561, and Section 505 of the Telecommunications Act of 1996, 47 CFR § 76.227 will be enforced effective May 18, 1997.

Lists of Subjects in 47 CFR Part 76

Cable television.

Federal Communications Commission

William F. Caton,

Acting Secretary.

[FR Doc. 97–11974 Filed 5–12–97; 8:45 am]

BILLING CODE 6712–01–P

DEPARTMENT OF COMMERCE

50 CFR Part 679

[Docket No. 970206022–7102–02; I.D. 012197C]

RIN 0648-AJ35

Fisheries in the Exclusive Economic Zone Off Alaska; Modify Prior Notice of Landing Requirement

AGENCY: National Marine Fisheries Service (NMFS), National Oceanic and Atmospheric Administration (NOAA), Commerce.

ACTION: Final rule.

SUMMARY: NMFS implements a regulatory amendment to the Individual Fishing Quota (IFQ) Program for fixed gear Pacific halibut and sablefish fisheries in and off Alaska. This action redefines the length of time within which a 6-hour prior notice of landing is valid and requires that a new prior notice of IFQ landing be submitted to NMFS if the landing originally reported will take place either before or more than 2 hours after the date and time scheduled in the original prior notice of IFQ landing. This action is necessary to reinforce the enforcement rationale underlying the original requirement and improve compliance with IFQ regulations. This action is intended to improve the IFQ Program's ability to manage efficiently the Pacific halibut and sablefish resources of the Exclusive Economic Zone off Alaska.

EFFECTIVE DATE: June 12, 1997.

ADDRESSES: Copies of the Regulatory Impact Review for this action may be obtained from Fisheries Management Division, Attn: Lori Gravel, Alaska Region, NMFS, Room 453, 709 West 9th Street, Juneau, AK 99801, or P.O. Box 21668, Juneau, AK 99802.

FOR FURTHER INFORMATION CONTACT: James Hale, 907-586-7228.

SUPPLEMENTARY INFORMATION:

Background

The fixed gear halibut and sablefish fisheries are managed under the IFQ Program, a limited access system for fixed gear Pacific halibut (*Hippoglossus stenolepis*) and sablefish (*Anoplopoma fimbria*) fisheries in and off Alaska. The North Pacific Fishery Management Council (Council), under authority of the Magnuson-Stevens Fishery Conservation and Management Act and the Northern Pacific Halibut Act of 1982 (Halibut Act), recommended the IFQ Program, which NMFS implemented in 1995. The IFQ Program was designed to reduce excessive fishing capacity while maintaining the social and economic character of the fixed gear fishery and the Alaskan coastal communities where many of these fishermen are based.

The regulations implementing the IFQ Program require vessel operators wishing to land IFQ species to notify NMFS no less than 6 hours prior to the landing and include in this notification the name and location of the registered buyer to whom the fish will be landed and the anticipated date and time of landing (§ 679.5(l)(1)(i)). This action modifies that requirement by specifying the length of time after the prior notice date and time specified in which IFQ species can be landed. As amended, the regulations require that fishermen land IFQ species no earlier than the anticipated time specified in the notice and no later than 2 hours after the specified time. In the event that a vessel does not make the landing within 2 hours after the time specified in the notice, the vessel operator must submit a new notice subject to all the requirements for the original notice, including that the notice be filed at least 6 hours prior to landing IFQ species. As in the present regulation, if a vessel operator wishes to make a landing earlier than the anticipated time specified in a notice, the operator must file a new notice subject to all the requirements of the original notice, including that the notice be filed at least 6 hours prior to landing IFQ species.

Also, the current requirement that the notice include the name and location of the registered buyer to whom a landing will be made is clarified. ''Location'' may be misinterpreted to mean the business address of the registered buyer rather than, as was intended, the actual location of the landing. This action clarifies that requirement by making explicit that the notice must include the location of the landing.

Further information on this action may be found in the preamble to the proposed rule published February 21, 1997, at 62 FR 7993. No comments were received during the public comment period on the proposed rule, and no changes have been made in this action as published in the proposed rule.

Classification

This final rule contains a collection-of-information requirement subject to the Paperwork Reduction Act (PRA). The requirement for a 6-hour prior notice of IFQ landings has been approved by the Office of Management and Budget (OMB) under Control Number 0648-0272. Public reporting burden for this collection of information is estimated to average 12 minutes per response, including the time for reviewing instructions, searching existing data sources, gathering and maintaining the data needed, and completing and reviewing the collection of information.

The proposed rule for this action invited comments on: (a) Whether the proposed collection of information is necessary for the proper performance of the functions of the agency, including whether the information shall have practical utility; (b) the accuracy of the agency's estimate of the burden of the proposed collection of information; (c) ways to enhance the quality, utility, and clarity of the information to be collected; and (d) ways to minimize the burden of the collection of information on respondents, including through use of automated collection techniques or other forms of information technology.

NMFS received no comments on these issues. This collection has been approved by OMB under Control Number 0648–0272.

This final rule has been determined to be not significant for purposes of E.O. 12866.

When this rule was proposed, the Assistant General Counsel for Legislation and Regulations of the Department of Commerce certified to the Chief Counsel for Advocacy of the Small Business Administration that, if adopted as proposed, the final rule

would not have a significant economic impact on a substantial number of small entities. As a result, a regulatory flexibility analysis was not prepared. No comments were received regarding this certification. Accordingly, the basis for that certification has not changed.

List of Subjects in 50 CFR Part 679

Fisheries, Reporting and recordkeeping requirements.

Dated: May 7, 1997.

Nancy Foster,

Deputy Assistant Administrator for Fisheries, National Marine Fisheries Service.

For the reasons set out in the preamble, 50 CFR part 679 is amended as follows:

PART 679—FISHERIES OF THE EXCLUSIVE ECONOMIC ZONE OFF ALASKA

1. The authority citation for part 679 continues to read as follows:

Authority: 16 U.S.C. 773 *et seq.*, 1801 *et seq.*

2. In § 679.5, paragraph (l)(1)(i)(B) is revised and paragraph (l)(1)(i)(D) is added to read as follows:

§ 679.5 Recordkeeping and reporting.

* * * * *

(l) * * *

(1) * * *

(i) * * *

(B) Notification must include: Name of the registered buyer(s) to whom the IFQ halibut or IFQ sablefish will be landed and the location of the landing; vessel identification; estimated weight of the IFQ halibut or IFQ sablefish that will be landed; identification number(s) of the IFQ card(s) that will be used to land the IFQ halibut or IFQ sablefish; and the date and time that the landing will take place.

* * * * *

(D) The operator of any vessel wishing to land IFQ halibut or IFQ sablefish before the date and time reported in the prior notice or later than 2 hours after the date and time reported in the prior notice must submit a new prior notice of IFQ landing in compliance with the provisions set forth in paragraphs (l)(1)(i) (A) through (C) of this section.

* * * * *

[FR Doc. 97–12422 Filed 5–12–97; 8:45 am]

BILLING CODE 3510–22–F

Proposed Rules

Federal Register
Vol. 62, No. 92
Tuesday, May 13, 1997

This section of the FEDERAL REGISTER contains notices to the public of the proposed issuance of rules and regulations. The purpose of these notices is to give interested persons an opportunity to participate in the rule making prior to the adoption of the final rules.

DEPARTMENT OF AGRICULTURE

Federal Crop Insurance Corporation

7 CFR Parts 435 and 457

Tobacco (Quota Plan) Crop Insurance Regulations; and Common Crop Insurance Regulations; Quota Tobacco Crop Insurance Provisions

AGENCY: Federal Crop Insurance Corporation, USDA.

ACTION: Proposed rule.

SUMMARY: The Federal Crop Insurance Corporation (FCIC) proposes specific crop provisions for the insurance of quota tobacco. The provisions will be used in conjunction with the Common Crop Insurance Policy Basic Provisions, which contain standard terms and conditions common to most crops. The intended effect of this action is to provide policy changes to better meet the needs of the insured, include the current tobacco (quota plan) crop insurance regulations with the Common Crop Insurance Policy for ease of use and consistency of terms, and to restrict the effect of the current tobacco (quota plan) crop insurance regulation to the 1997 and prior crop years.

EFFECTIVE DATES: Written comments and opinions on this proposed rule will be accepted until close of business June 12, 1997 and will be considered when the rule is to be made final.

ADDRESSES: Interested persons are invited to submit written comments to the Chief, Product Development Branch, Federal Crop Insurance Corporation, United States Department of Agriculture, 9435 Holmes Road, Kansas City, MO 64131.

FOR FURTHER INFORMATION CONTACT: Gary Johnson, Insurance Management Specialist, Research and Development Division, Product Development Branch, FCIC, at the Kansas City, MO, address listed above, telephone (816) 926–7730.

SUPPLEMENTARY INFORMATION:

Executive Order No. 12866

The Office of Management and Budget has determined this rule to be exempt for the purposes of Executive Order No. 12866 and, therefore, this rule has not been reviewed by OMB.

Paperwork Reduction Act of 1995

The amendments set forth in this proposed rule do not contain additional information collections that require clearance by OMB under the provisions of 44 U.S.C. chapter 35.

The title of this information collection is ''Multiple Peril Crop Insurance.'' The information to be collected includes a crop insurance application and acreage report. Information collected from the application and acreage report is electronically submitted to FCIC by the reinsured companies. Potential respondents to this information collection are producers of quota tobacco that are eligible for Federal crop insurance.

The information requested is necessary for the reinsured companies and FCIC to provide insurance and reinsurance, determine eligibility, determine the correct parties to the agreement or contract, determine and collect premiums or other monetary amounts, and pay benefits.

All information is reported annually. The reporting burden for this collection of information is estimated to average 16.9 minutes per response for each of the 3.6 responses from approximately 1,755,015 respondents. The total annual burden on the public for this information collection is 2,676,932 hours.

FCIC is requesting comments on the following: (a) Whether the proposed collection of information is necessary for the proper performance of the functions of the agency, including whether the information shall have practical utility; (b) the accuracy of the agency's estimate of the burden of the proposed collection of information; (c) ways to enhance the quality, utility, and clarity of the information to be collected; and (d) ways to minimize the burden of the collection of information on respondents, including through the use of automated collection techniques or other forms of information gathering technology.

Comments regarding paperwork reduction should be submitted to the Desk Officer for Agriculture, Office of Information and Regulatory Affairs, Office of Management and Budget, Washington, D.C. 20503.

OMB is required to make a decision concerning the collections of information contained in these proposed regulations between 30 and 60 days after submission to OMB. Therefore, a comment to OMB is best assured of having full effect if OMB receives it within 30 days of publication. This does not affect the deadline for the public to comment on the proposed regulation.

Unfunded Mandates Reform Act of 1995

Title II of the Unfunded Mandates Reform Act of 1995 (UMRA), Public Law 104–4, establishes requirements for Federal agencies to assess the effects of their regulatory actions on state, local, and tribal governments and the private sector. This rule contains no Federal mandates (under the regulatory provisions of title II of the UMRA) for state, local, and tribal governments or the private sector. Thus, this rule is not subject to the requirements of sections 202 and 205 of the UMRA.

Executive Order No. 12612

It has been determined under section 6(a) of Executive Order No. 12612, Federalism, that this rule does not have sufficient federalism implications to warrant the preparation of a Federalism Assessment. The provisions contained in this rule will not have a substantial direct effect on states or their political subdivisions, or on the distribution of power and responsibilities among the various levels of government.

Regulatory Flexibility Act

This regulation will not have a significant impact on a substantial number of small entities. New provisions included in this rule will not impact small entities to a greater extent than large entities. Under the current regulations, a producer is required to complete an application and acreage report. If the crop is damaged or destroyed, the insured is required to give notice of loss and provide the necessary information to complete a claim for indemnity. The insured must also annually certify to the previous years production if adequate records are available to support the certification. The producer must maintain the

production records to support the certified information for at least three years. This regulation does not alter those requirements. The amount of work required of the insurance companies delivering and servicing these policies will not increase significantly from the amount of work currently required. This rule does not have any greater or lesser impact on the producer. Therefore, this action is determined to be exempt from the provisions of the Regulatory Flexibility Act (5 U.S.C. 605), and no Regulatory Flexibility Analysis was prepared.

Federal Assistance Program

This program is listed in the Catalog of Federal Domestic Assistance under No. 10.450.

Executive Order No. 12372

This program is not subject to the provisions of Executive Order No. 12372, which require intergovernmental consultation with state and local officials. See the Notice related to 7 CFR part 3015, subpart V, published at 48 FR 29115, June 24, 1983.

Executive Order No. 12988

This proposed rule has been reviewed in accordance with Executive Order No. 12988. The provisions of this rule will not have a retroactive effect prior to the effective date. The provisions of this rule will preempt state and local laws to the extent such state and local laws are inconsistent herewith. The administrative appeal provisions published at 7 CFR part 11 must be exhausted before any action for judicial review may be brought.

Environmental Evaluation

This action is not expected to have a significant impact on the quality of the human environment, health, and safety. Therefore, neither an Environmental Assessment nor an Environmental Impact Statement is needed.

National Performance Review

This regulatory action is being taken as part of the National Performance Review Initiative to eliminate unnecessary or duplicative regulations and improve those that remain in force.

Background

FCIC proposes to add to the Common Crop Insurance Regulations (7 CFR part 457), a new section, 7 CFR 457.156, Quota Tobacco Crop Insurance Provisions. The new provisions will be effective for the 1998 and succeeding crop years. These provisions will replace and supersede the current provisions for insuring quota tobacco found at 7 CFR part 435 Tobacco (Quota Plan). FCIC also proposes to amend 7 CFR part 435 to limit its effect to the 1997 and prior crop years. FCIC also proposes to amend 7 CFR part 435 to limit its effect to the 1997 and prior crop years.

This rule makes minor editorial and format changes to improve the Tobacco (Quota Plan) Crop Insurance Regulation's compatibility with the Common Crop Insurance Policy. In addition, FCIC is proposing substantive changes in the provisions for insuring quota tobacco as follows:

1. The Late Planting Agreement Option (LPAO) has been discontinued because the final planting date is late enough to allow anyone with tobacco plants to timely transplant them and the reduction in guarantee under the LPAO is not sufficient to cover the increased risks of a shorter growing season.

2. Section 1—Add definitions for terms ''adequate stand,'' ''amount of insurance,'' ''approved yield,'' ''days,'' ''discount variety,'' ''FSA,'' ''fair market value,'' ''final planting date,'' ''good farming practices,'' ''insured poundage quota,'' ''irrigated practice,'' ''planted acreage,'' ''pound,'' ''practical to replant,'' ''production guarantee,'' ''replanting,'' ''tobacco bed,'' ''USDA,'' and ''written agreement'' for clarification. The definition of ''harvest'' was revised to remove the requirement that 20 percent of the production guarantee per acre for the unit of the tobacco had to be cut per acre from the unit in order for the unit to be considered harvested. Since the harvest incentive of 35 percent of the guarantee has been deleted, this provision is no longer necessary. Added the definition of ''hydroponic plants'' to identify seedlings grown in a liquid nutrient solution.

3. Section 3—Delete the six cents per pound warehouse charge deduction for the purpose of determining the amount of insurance. This provides the producer the full value of the tobacco sold without the warehouse charge. It also allows the use of gross sales to establish the value of production to count without the warehouse charge deduction. Allow the use of actual production history to determine the approved yield for insurance purposes. The most accurate determination of the yield for the unit uses insured's records of production.

4. Section 4—Change the contract date from December 31 to November 30 in order to maintain an adequate time period between this date and the earliest cancellation date.

5. Section 5—Change the cancellation and termination dates from April 15 to March 15. This conforms to a statutory change that moved spring planted crop sales closing dates 30 days earlier.

6. Section 6(a)—Clarify that insurance coverage will only apply to the effective poundage marketing quota as defined in these regulations.

7. Section 6(b)(c)—Require that a copy of any written lease agreement between the landlord and tenant be provided to the insurance provider. This will allow the farm's effective poundage marketing quota to be distributed between two or more insureds based on a written lease agreement between the landlord and the insured. This provision was added because the present method of distributing the farm's effective marketing quota between two or more insureds does not provide equitable treatment for all insureds.

8. Section 8(d)—Clarify that any acreage damaged prior to the final planting date must be replanted unless replanting is not practical.

9. Section 10(c)(d)—Clarify that insects and plant disease are insurable causes of loss, but they are not insurable causes of loss if damage was due to insufficient or improper application of pest or disease control measures.

10. Section 12(g)—Add a provision for a requirement that once the insurance provider agrees that any current year's or carryover tobacco has no market value, the insured must destroy it. This provision eliminates the adjustment of next year's quota when the crop is still saleable at the time of the loss. It also eliminates the opportunity to falsely report carryover and current year's tobacco as of no value to increase indemnity payments. This provision is consistent with FSA's requirement that tobacco having no value must be destroyed.

11. Section 13—Add provisions for providing insurance coverage by written agreement. FCIC has a long standing policy of permitting certain modifications of the insurance contract by written agreement for some policies. This amendment allows FCIC to tailor the policy to a specific insured in certain instances. The new section will cover the procedures for and duration of written agreements.

List of Subjects in 7 CFR Parts 435 and 457

Crop insurance, Quota tobacco, Tobacco (quota plan) crop insurance regulations. Proposed Rule

Accordingly, for reasons set forth in the preamble, the Federal Crop Insurance Corporation hereby proposes to amend 7 CFR parts 435 and 457, as follows:

PART 435—TOBACCO (QUOTA PLAN) CROP INSURANCE REGULATIONS FOR THE 1985 AND SUBSEQUENT CONTRACT YEARS

1. The authority citation for 7 CFR part 435 continues to read as follows:

Authority: 7 U.S.C. 1506(1), 1506(p).

2. The part heading is revised to read as set forth above.

3. The subpart heading ''Subpart—Regulations for the 1985 through 1997 Crop Years'' is removed.

4. Section 435.7 is amended by revising the introductory text of paragraph (d) to read as follows:

* * * * *

(d) The application for the 1985 and subsequent crop years is found at subpart D of part 400—General Administrative Regulations (7 CFR 400.37, 400.38). The provisions of the Tobacco (Quota Plan) Insurance Policy for the 1985 through 1997 crop years are as follows:

* * * * *

PART 457—COMMON CROP INSURANCE REGULATIONS; REGULATIONS FOR THE 1994 AND SUBSEQUENT CONTRACT YEARS

4. The authority citation for 7 CFR part 457 continues to read as follows:

Authority: 7 U.S.C. 1506(1), 1506(p).

5. Section 457.156 is added to read as follows:

§ 457.156 Quota tobacco crop insurance provisions.

The Quota Tobacco Crop Provisions for the 1998 and succeeding crop years are as follows:

FCIC policies:

DEPARTMENT OF AGRICULTURE

Federal Crop Insurance Corporation

Reinsured policies:

(Appropriate title for insurance provider)

Both FCIC and reinsured policies:

Quota Tobacco Crop Provisions

If a conflict exists among the Basic Provisions (§ 457.8), these Crop Provisions, and the Special Provisions; the Special Provisions will control these Crop Provisions and the Basic Provisions; and these Crop Provisions will control the Basic Provisions.

1. Definitions

Amount of insurance. The dollar amount determined by multiplying the insured poundage quota by the current year's support price.

Approved yield. The yield calculated in accordance with 7 CFR part 400, subpart G.

Carryover tobacco. Any tobacco produced on the FSA Farm Serial Number in previous years that remained unsold at the end of the most recent marketing year.

County. In lieu of the provisions of section 1 (Definitions) of the Basic Provisions (§ 457.8), county is defined as the county or other political subdivision of a state shown on your accepted application including any land identified by an FSA Farm Serial Number for such county but physically located in another county.

Days. Calendar days.

Discount variety. Tobacco defined as such under the provisions of the United States Department of Agriculture tobacco price support program.

Effective poundage marketing quota. The farm marketing quota as established and recorded by the FSA office for the county plus any additional poundage you intend to produce for each unit in that crop year, minus the amount of any carryover tobacco.

FSA. The Farm Service Agency, an agency of the United States Department of Agriculture, or a successor agency.

Fair market value. The current year's tobacco growing season average price for the applicable type of tobacco obtained from the sale of the tobacco through market other than an auction warehouse.

Farm yield. The yield per acre used by FSA to establish the effective poundage marketing quota for a FSA Farm Serial Number, unless we have established a yield for that FSA Farm Serial Number in the actuarial table.

Final planting date. The date contained in the Special Provisions for the insured crop by which the crop must initially be planted in order to be insured for the full production guarantee.

Good farming practices. The cultural practices generally in use in the county for the crop to make normal progress toward maturity and produce at least the yield used to determine the amount of insurance, and are those recognized by the Cooperative State Research, Education, and Extension Service as compatible with agronomic and weather conditions in the county.

Harvest. Cutting and removing all insured tobacco from the field in which it was grown.

Hydroponic plants. Seedlings grown in liquid nutrient solutions.

Insured poundage quota. The lesser of:

(1) the product (in pounds) obtained by multiplying the effective poundage marketing quota for the FSA Farm Serial Number by your selected coverage level; or

(2) the farm yield or approved yield, as applicable multiplied by the insured acres and by your selected coverage level.

Market price. The previous years' season average price published by National Agricultural Statistics Service for the applicable type of tobacco in the area.

Marketing year. The marketing year published by National Agricultural Statistics Service for the applicable type of tobacco in the area.

Planted acreage. Land in which tobacco seedlings, including hydroponic plants, have been transplanted by hand or machine from the tobacco bed to the field.

Pound. Sixteen ounces avoirdupois.

Practical to replant. In lieu of the definition of ''Practical to replant'' contained in section 1 of the Basic Provisions (§ 457.8), practical to replant is defined as our determination, after loss or damage to the insured crop, based on factors, including but not limited to moisture availability, condition of the field, time to crop maturity, and marketing window, that replanting the insured crop will allow the crop to attain maturity prior to the calendar date for the end of the insurance period. It will not be considered practical to replant after the final planting date.

Replanting. Performing the cultural practices necessary to replace the tobacco plant, and then replacing the tobacco plant in the insured acreage with the expectation of growing a successful crop.

Support price. The average price per pound for the type of tobacco as announced by the USDA under its tobacco price support program.

Tobacco bed. An area protected from adverse weather, in which tobacco seeds are sown and seedlings are grown until transplanted into the tobacco field by hand or machine.

Unit. In lien of the provision of section 1 (Definition) of the Basic Provisions (§ 457.8), a unit is all insurable acreage of an insurable type of tobacco in the county in which you have an insured share on the date of planting for the crop year and which is identified by a single FSA Farm Serial Number at the time insurance first attaches under these provisions for the crop year.

USDA. United States Department of Agriculture.

Written agreement. A written document that alters designated terms of this policy in accordance with section 13.

2. Unit Division

A unit will be determined in accordance with the definition of unit contained in section 1 of these Crop Provisions and may not be subdivided on any basis, unless specified by the Special Provisions.

3. Insurance Guarantees, Coverage Levels, and Prices for Determining Indemnities

In lieu of section 3(c) (Insurance Guarantees, Coverage Levels, and Prices for Determining Indemnities) of the Basic Provisions (§ 457.8), you will only be required to file an annual production report to us if required by the Special Provisions to establish an approved yield in lieu of the farm yield or yield shown by us on the actuarial table. If required by the Special Provisions, you must file an annual production report in accordance with section 3(c) (Insurance Guarantees, Coverage Levels, and Prices for Determining Indemnities) of the Common Crop Insurance Policy (§ 457.8).

4. Contract Changes.

In accordance with section 4 (Contract Changes) in the Basic Provisions (§ 457.8), the contract change date is November 30 preceding the cancellation date.

5. Cancellation and Termination Dates

In accordance with section 2 (Life of Policy, Cancellation, and Termination) of the Basic Provisions (§ 457.8), the cancellation and termination dates are March 15.

6. Report of Acreage

In addition to the requirements of section 6 (Report of Acreage) of the Basic Provisions (§ 457.8):

(a) You must report the effective poundage marketing quota, any additional poundage that you intend to produce for each unit in the crop year, and the quantity of carryover tobacco on hand at the time the acreage report is submitted. Once submitted, you may not revise the acreage report.

(b) You must provide a copy of any written lease agreement between you and any landlord or tenant showing the amount of the effective poundage marketing quota allocated to you. The total amount of the effective poundage marketing quota allocated to all persons holding a share may not differ from the effective poundage marketing quota designation made to FSA. The written lease agreement must:

(1) Identify all other persons sharing in the effective poundage marketing quota; and

(2) Be submitted to your local office by the acreage reporting date.

(c) In the event of a loss, if the written lease agreement has been submitted timely, we will distribute the effective poundage marketing quota in accordance with the terms of the written lease agreement. If the written lease agreement is not submitted timely, we will prorate the effective poundage marketing quota across the FSA Farm Serial Number to all insured and uninsured persons based on planted acres within the FSA Farm Serial Number.

7. Insured Crop

(a) In accordance with section 8 (Insured Crop) of the Basic Provisions (§ 457.8), the crop insured will be one or more of tobacco types designated in the Special Provisions, in which you have a share, that you elect to insure, and for which a premium rate is provided by the actuarial table.

(b) The effective poundage marketing quota may not include any tobacco that would be subject to a marketing quota penalty under USDA Tobacco Marketing Quota Regulations.

(c) Unless otherwise provided by the actuarial table, for any crop year in which USDA does not promulgate Tobacco Marketing Quota Regulations, the effective poundage marketing quota will be the pounds obtained by multiplying the applicable approved yield per acre by the lower of the reported or insured acreage on the unit.

8. Insurable Acreage

In addition to the provisions of section 9 (Insurable Acreage) of the Basic Provisions (§ 457.8), we will not insure any acreage:

(a) Planted to a discount variety;

(b) Planted to a tobacco type for which no premium rate is provided by the actuarial table;

(c) Planted in any manner other than as provided in the definition of ''planted acreage'' in section 1 of these Crop Provisions (Such acreage is not insurable unless otherwise provided by the Special Provisions or by written agreement); or

(d) Damaged before the final planting date to the extent that the majority of producers in the area would normally not further care for the crop, unless such crop is replanted or we agree that replanting is not practical.

9. Insurance Period

In accordance with the provisions of section 11 (Insurance Period) of the Basic Provisions (§ 457.8), insurance ceases the earliest of:

(a) Destruction of the tobacco;

(b) Weighing-in at the tobacco warehouse;

(c) Removal of the tobacco from the field where grown except for curing, grading, packing, or immediate delivery to the tobacco warehouse; or

(d) The February 28 immediately following the normal harvest period.

10. Causes of Loss

In accordance with the provisions of section 12 (Causes of Loss) of the Basic Provisions (§ 457.8), insurance is provided only against the following causes of loss that occur during the insurance period:

(a) Adverse weather conditions;

(b) Fire;

(c) Insects, but not damage due to insufficient or improper application of pest control measures;

(d) Plant disease, but not damage due to insufficient or improper application of disease control measures;

(e) Wildlife;

(f) Earthquake;

(g) Volcanic eruption; or

(h) Failure of the irrigation water supply, if caused by an insured peril that occurs during the insurance period.

11. Duties In The Event of Damage or Loss

In accordance with the requirements of section 14 (Duties In The Event of Damage or Loss) of the Basic Provisions (§ 457.8), any representative samples we may require of each unharvested tobacco type must be at least 5 feet wide and extend the entire length of each field in the unit. The samples must not be harvested or destroyed until the earlier of our inspection or 15 days after harvest of the balance of the unit is completed.

12. Settlement of Claim

(a) We will determine your loss on a unit basis. In the event you are unable to provide separate acceptable production records, we will allocate any commingled production to such units in proportion to our liability on the harvested acreage for each unit.

(b) In the event of loss or damage covered by this policy, we will settle your claim by:

(1) Multiplying the insured poundage quota by the current year's support price;

(2) Subtracting the value of the total production to be counted in (see section 12(c)) from the amount of insurance in section 12(b)(1); and

(3) Multiplying the result in section 12(b)(2) by your share;

(c) The value of the total production to count (pounds of production that is appraised or harvested multiplied by the applicable price) for all insurable acreage on the unit will include:

(1) All appraised production as follows:

(i) Not less than the amount of insurance per insured acre for the unit for any acreage:

(A) That is abandoned;

(B) Put to another use without our consent;

(C) That is damaged solely by uninsured causes; or

(D) For which you fail to provide acceptable production records;

(ii) Production lost due to uninsured causes;

(iii) Potential production on unharvested insured acreage that you intend to put to another use with our consent, if you and we agree on the appraised amount of production multiplied by the current year's support price. Upon such agreement, the insurance period for that acreage will end when you put the acreage to another use or abandon the crop. If agreement on the appraised amount of production is not reached:

(A) If you do not elect to continue to care for the crop, we may consent to allow you to put the acreage to another use if you agree to leave intact, and provide sufficient care for, representative samples of the crop in locations acceptable to us (The amount of production to count for such acreage will be based on the harvested production or appraisals multiplied by the current year's support price from the samples at the time harvest should have occurred. If you do not leave the required samples intact, or you fail to provide sufficient care for the samples, our appraisal made prior to giving you consent to put the acreage to another use will be used to determine the amount of production to count multiplied by the current year's support price); or

(B) If you elect to continue to care for the crop, the amount of production to count for the acreage will be the harvested production, or our reappraisal multiplied by the current year's support price if additional damage occurs and the crop is not harvested;

(iv) If a current year's support price is not in effect, appraised production will be valued at the market price;

(2) All harvested production from insurable acreage multiplied by:

(i) Gross sale receipts for the tobacco sold on a warehouse floor;

(ii) Fair market value for tobacco sold other than on the warehouse floor; and

(iii) Fair market value for tobacco not sold.

(d) Mature tobacco production that is damaged by insurable causes will be adjusted for quality, based on the USDA Official Standard Grades, Burley Tobacco, U.S. Type 31, and will receive a price based on the following:

(1) Gross sale receipts for the tobacco sold on a warehouse floor;

(2) Fair market value for tobacco sold other than on the warehouse floor; and

(3) Fair market value for tobacco not sold.

(e) Production that is damaged by uninsurable causes will not be adjusted for quality, but will receive a price based on the current year's support price.

(f) To enable us to determine the fair market value of tobacco not sold through auction warehouses, you must give us the opportunity to inspect such tobacco before it is sold, contracted to be sold, or otherwise disposed; failure to provide us the opportunity to inspect such tobacco may result in rejection of any claim for indemnity.

(g) If we consider the best offer you receive for such tobacco to be inadequate, we may obtain additional offers on your behalf.

(h) Once we agree that any carryover or current year's tobacco has no market value due to insured causes, you must destroy it. If you refuse to destroy the tobacco with no value, we will determine the value and count it as production to count.

13. Written Agreements

Terms of this policy which are specifically designated for the use of written agreements may be altered by written agreement in accordance with the following:

(a) You must apply in writing for each written agreement no later than the sales closing date, except as provided in section 13(e);

(b) The application for a written agreement must contain all variable terms of the contract between you and us that will be in effect if the written agreement is not approved;

(c) If approved, the written agreement will include all variable terms of the contract, including, but not limited to, crop type or variety, the guarantee, premium rate, and price election;

(d) Each written agreement will only be valid for one year (if the written agreement is not specifically renewed the following year, insurance coverage for subsequent crop years will be in accordance with the printed policy); and

(e) An application for a written agreement submitted after the sales closing date may be approved if, after a physical inspection of the acreage, it is determined that no loss has occurred and the crop is insurable in accordance with the policy and written agreement provisions.

Signed in Washington, D.C., on May 7, 1997.

Kenneth D. Ackerman,

Manager, Federal Crop Insurance Corporation.

[FR Doc. 97–12436 Filed 5–12–97; 8:45 am]

BILLING CODE 3410–08–P

DEPARTMENT OF AGRICULTURE

Grain Inspection, Packers and Stockyards Administration

7 CFR Part 800

RIN 0580–AA52

Fees for Official Inspection and Official Weighing Services

AGENCY: Grain Inspection, Packers and Stockyards Administration, USDA.

ACTION: Proposed rule.

SUMMARY: The Federal Grain Inspection Service (FGIS) of the Grain Inspection, Packers and Stockyards Administration (GIPSA) is proposing an approximate 3 percent increase in certain of its service fees for official inspection and weighing services performed in the United States under the United States Grain Standards Act (USGSA), as amended. The proposed increase covers hourly rates and certain unit rates on tests performed at other than an applicant's facility. The proposed increase is designed to generate additional revenue required to recover operational costs created by mandated cost-of-living increases to Federal salaries in fiscal year 1997.

DATE: Written comments must be submitted on or before May 28, 1997.

ADDRESSES: Written comments must be submitted to George Wollam, USDA, GIPSA, ART, Stop 3649, Washington, D.C. 20250–3649, or FAX them to (202) 720–4628. All comments received will be made available for public inspection during regular business hours in Room 0623, South Building, USDA, 1400 Independence Avenue, SW, Washington, D.C. 20250–3649 (7 CFR 1.27 (b)). Comments may also be sent by electronic mail or Internet to: gwollam@fgis.usda.gov.

FOR FURTHER INFORMATION CONTACT: George Wollam at above address or telephone (202) 720–0292.

SUPPLEMENTARY INFORMATION:

Executive Order 12866

This rule has been determined to be nonsignificant for the purpose of Executive Order 12866 and, therefore, has not been reviewed by the Office of Management and Budget.

Executive Order 12988

This proposed rule has been reviewed under Executive Order 12988, Civil Justice Reform. This action is not intended to have a retroactive effect. The USGSA provides in § 87g that no subdivision may require or impose any requirements or restrictions concerning the inspection, weighing, or description of grain under the Act. Otherwise, this proposed rule will not preempt any State or local laws, regulations, or policies unless they present irreconcilable conflict with this proposed rule. There are no administrative procedures which must be exhausted prior to any judicial challenge to provisions of this proposed rule.

Effects on Small Entities

James R. Baker, Administrator, GIPSA, has determined that this proposed rule will not have a significant economic impact on a substantial number of small entities as defined in the Regulatory Flexibility Act (5 U.S.C. 601 *et seq.*). Most users of the official inspection and weighing services do not meet the requirements for small entities. FGIS is required by statute to make services available and to recover costs of providing such services, as nearly as practicable.

The proposed fee revision is primarily applicable to entities engaged in the export of grain. Under provisions of the USGSA, most grain exported from U.S. export port locations must be officially inspected and weighed. Mandatory inspection and weighing services are provided by FGIS on a fee basis at 37 export facilities. All of the export facilities are owned and managed by multi-national corporations, large cooperatives, or public entities that do not meet the criteria for small entities as defined under the Regulatory Flexibility Act and the regulations issued thereunder. Some users of the service who request non-mandatory official inspection and weighing services at other than export locations could be considered small entities. However, this fee increase merely reflects the cost-of-living increases in Federal salaries for hourly and certain unit fees. The approximate 3-percent proposed increase in fees would not have a significant impact on either small or large entities. Additional revenue estimated for fiscal year 1997 are projected to be $218,100 for a total of $22.218 million in revenue projected for fiscal year 1997.

Information Collection and Recordkeeping Requirements

In compliance with the Paperwork Reduction Act of 1995 (44 U.S.C. Chapter 35), the previously approved information collection and recordkeeping requirements have been approved by the Office of Management and Budget under control number 0580–0013.

Background

The USGSA requires FGIS to charge and collect reasonable fees for performing official inspection and weighing services. The fees are to cover, as nearly as practicable, FGIS' costs for performing these services, including related administrative and supervisory costs.

The proposed approximate 3-percent increase in fees is designed to generate additional revenue required to recover operational costs created by mandated cost-of-living increases to Federal salaries for GIPSA employees in fiscal year 1997. The average salary increase for GIPSA employees in fiscal year 1997 is approximately 3 percent. The proposed action is being taken immediately to increase fiscal year 1997 revenue to cover, in part, projected fiscal year 1997 operational costs.

The current USGSA fees and were published in the **Federal Register** on August 22, 1996 (61 FR 43301), and became effective on October 1, 1996. They will appear in the 1997 edition of 7 CFR 800.71, Schedule A, Fees for Official Inspection and Weighing Services Performed in the United States. The current fee schedule is projected to

generate approximately $22 million revenue for fiscal year 1997. This revenue is insufficient to recover operating expenses in fiscal year 1997. This is 5.2 percent below estimated fiscal year 1997 costs of $23.2 million. Similar losses have occurred over the past 3 years with $753,000 in fiscal year 1994; $630,000 in fiscal year 1995; and $1,273,000 in fiscal year 1996. These losses resulted in a retained earnings balance of only $922,000 at the beginning of fiscal year 1997, significantly below a desired 3-month operating reserve of $6 million. With the fee increase, it is estimated that $218,100 in additional revenue will be generated for fiscal year 1997. Total costs for fiscal year 1997 are projected to be $23.2 million and revenues with the fee increase for the last period of fiscal year 1997 are projected to be $22.218 million.

A further adjustment of fees, including an adjustment to the per metric ton administrative fee to recover the indirect costs of field offices and headquarters and replenish the operating reserve, is being considered and would be addressed in future rulemaking.

A 15-day comment period is deemed appropriate because projected exports and the associated requests for official services for such grain are projected to decrease in the coming months due to seasonal and other adjustments. Accordingly, given the current level of the operating reserve, it would be necessary to implement any fee increase that may result from this rulemaking as soon as possible.

Proposed Action

GIPSA proposes to apply an approximate 3-percent increase to those hourly and certain unit rates in 7 CFR 800.71, Table 1—Fees for Official Services Performed at an Applicant's Facility in an Onsite FGIS Laboratory; Table 2—Services Performed at Other Than an Applicant's Facility in an FGIS Laboratory; and Table 3, Miscellaneous Services.

In reviewing the fee schedule to identify these fees that would require a 3-percent increase, FGIS has identified several fees that under the current fee schedule are at levels that would not require any change. Accordingly, these fees would remain the same at this time.

List of Subjects in 7 CFR Part 800

Administrative practice and procedure; Grain.

For the reasons set out in the preamble, 7 CFR Part 800 is proposed to be revised as follows:

PART 800—GENERAL REGULATIONS

1. The authority citation for Part 800 continues to read as follows:

Authority: Pub. L. 94–582, 90 Stat. 2867, as amended (7 U.S.C. 71 *et seq.*)

2. Section 800.71 is revised to read as follows:

§ 800.71 Fees assessed by the Service.

(a) * * *

Schedule A.—Fees for Official Inspection and Weighing Services Performed in the United States

TABLE 1.—FEES FOR OFFICIAL SERVICES PERFORMED AT AN APPLICANT'S FACILITY IN AN ONSITE FGIS LABORATORY [1]

	Monday to Friday (6 a.m to 6 p.m.)	Monday to Friday (6 p.m. to 6 a.m.)	Saturday, Sunday, and Overtime [2]	Holidays
(1) Inspection and Weighing Services Hourly Rates (per service representative)				
1-year contract	$23.80	$25.60	$33.40	$40.20
6-month contract	25.80	27.60	35.40	46.20
3-month contract	29.60	30.80	38.60	48.00
Noncontract	34.00	36.00	44.20	54.20
(2) Additional Tests (cost per test, assessed in addition to the hourly rate) [3]				
(i) Aflatoxin (other than Thin Layer Chromatography)				8.50
(ii) Aflatoxin (Thin Layer Chromatography method)				20.00
(iii) Soybean protein and oil (one or both)				1.50
(iv) Wheat protein (per test)				1.50
(v) Sunflower oil (per test)				1.50
(vi) Vomitoxin (qualitative)				7.50
(vii) Vomitoxin (quantitative)				12.50
(viii) Waxy corn (per test)				1.50
(ix) Fees for other tests not listed above will be based on the lowest noncontract hourly rate.				
(x) Other services				
(a) Class Y Weighing (per carrier)				
(1) Truck/container				.30
(2) Railcar				1.25
(3) Barge				2.50
(3) Administrative Fee (assessed in addition to all other applicable fees, only one administrative fee will be assessed when inspection and weighing services are performed on the same carrier)				
(i) All outbound carriers (per-metric-ton) [4]				
(a) 1–1,000,000				0.090
(b) 1,000,001–1,500,000				0.082
(c) 1,500,001–2,000,000				0.042
(d) 2,000,001–5,000,000				0.032
(e) 5,000,001–7,000,000				0.017
(f) 7,000,001–0				.002
(ii) Additional services (assessed in addition to all other fees) [3]				
(a) Submitted sample (per sample—grade and factor)				1.50

TABLE 1.—FEES FOR OFFICIAL SERVICES PERFORMED AT AN APPLICANT'S FACILITY IN AN ONSITE FGIS LABORATORY [1]—Continued

	Monday to Friday (6 a.m to 6 p.m.)	Monday to Friday (6 p.m. to 6 a.m.)	Saturday, Sunday, and Overtime [2]	Holidays
(b) Submitted sample—Factor only (per factor)				0.70

[1] Fees apply for original inspection and weighing, reinspection, and appeal inspection service include, but are not limited to, sampling, grading, weighing, prior to loading stowage examinations, and certifying results performed within 25 miles of an employee's assigned duty station. Travel and related expenses will be charged for service outside 25 miles as found in § 800.72(a).

[2] Overtime rates will be assessed for all hours in excess of 8 consecutive hours that result from an applicant scheduling or requesting service beyond 8 hours, or if requests for additional shifts exceed existing staffing.

[3] Appeal and reinspection services will be assessed the same fee as the original inspection service.

[4] The administrative fee is assessed on an accumulated basis beginning at the start of the Service's fiscal year (October 1 each year).

TABLE 2.—SERVICES PERFORMED AT OTHER THAN AN APPLICANT'S FACILITY IN AN FGIS LABORATORY [1 2]

(1)Original Inspection and Weighing (Class X) Services:	
(i) Sampling only (use hourly rates from Table 1):	
(ii) Stationary lots (sampling, grade/factor, & checkloading):	
(a) Truck/trailer/container (per carrier)	$17.80
(b) Railcar (per carrier)	27.25
(c) Barge (per carrier)	174.00
(d) Sacked grain (per hour per service representative plus an administrative fee per hundredweight) (CWT)	0.02
(iii) Lots sampled online during loading (sampling charge under (i) above, plus):	
(a) Truck/trailer container (per carrier)	9.75
(b) Railcar (per carrier)	19.00
(c) Barge (per carrier)	108.00
(d) Sacked grain (per hour per service representative plus an administrative fee per hundredweight) (CWT)	0.02
(iv) Other services:	
(a) Submitted sample (per sample—grade and factor)	10.25
(b) Warehouseman inspection (per sample)	17.25
(c) Factor only (per factor—maximum 2 factors)	4.20
(d) Checkloading/condition examination (use hourly rates from Table 1, plus an administrative fee per hundredweight if not previously assessed) (CWT)	0.02
(e) Reinspection (grade and factor only. Sampling service additional, item (i) above)	11.25
(f) Class X Weighing (per hour per service representative)	45.00
(v) Additional tests (excludes sampling):	
(a) Aflatoxin (per test—other than TLC method)	25.25
(b) Aflatoxin (per test—TLC method)	100.75
(c) Soybean protein and oil (one or both)	7.85
(d) Wheat protein (per test)	7.85
(e) Sunflower oil (per test)	7.85
(f) Vomitoxin (qualitative)	25.25
(g) Vomitoxin (quantitative)	30.25
(h) Waxy corn (per test)	9.10
(i) Canola (per test—00 dip test)	9.10
(j) Pesticide Residue Testing [3].	
(1) Routine Compounds (per sample)	200.00
(2) Special Compounds (per service representative)	100.00
(k) Fees for other tests not listed above will be based on the lowest noncontract hourly rate from Table 1.	
(2) Appeal inspection and review of weighing service: [4]	
(i) Board Appeals and Appeals (grade and factor)	74.85
(a) Factor only (per factor—max 2 factors)$	38.25
(b) Sampling service for Appeals additional (hourly rates from Table 1).	
(ii) Additional tests (assessed in addition to all other applicable fees):	
(a) Aflatoxin (per test, other than TLC)	25.25
(b) Aflatoxin (TLC)	110.30
(c) Soybean protein and oil (one or both)	15.45
(d) Wheat protein (per test)	15.45
(e) Sunflower oil (per test)	15.45
(f) Vomitoxin (per test—qualitative)	35.25
(g) Vomitoxin (per test—quantitative)	40.25
(h) Vomitoxin (per test—HPLC Board Appeal)	126.00
(i) Pesticide Residue Testing [3].	
(1) Routine Compounds (per sample)	200.00
(2) Special Compounds (per service representative)	100.00
(j) Fees for other tests not listed above will be based on the lowest noncontract hourly rate from Table 1.	
(iii) Review of weighing (per hour per service representative)	65.40
(3) Stowage examination (service-on-request): [3]	
(i) Ship (per stowage space) (minimum $250 per ship)	50.00
(ii) Subsequent ship examinations (same as original) (minimum $150 per ship).	
(iii) Barge (per examination)	40.00

TABLE 2.—SERVICES PERFORMED AT OTHER THAN AN APPLICANT'S FACILITY IN AN FGIS LABORATORY [1] [2]—Continued

(iv) All other carriers (per examination)	15.00

[1] Fees apply for original inspection and weighing, reinspection, and appeal inspection service include, but are not limited to, sampling, grading, weighing, prior to loading stowage examinations, and certifying results performed within 25 miles of an employee's assigned duty station. Travel and related expenses will be charged for service outside 25 miles as found in § 800.72(a).
[2] An additional charge will be assessed when the revenue from the services in Schedule A, Table 2, does not cover what would have been collected at the applicable hourly rate as provided in § 800.72(2).
[3] If performed outside of normal business, 1½ times the applicable unit fee will be charged.
[4] If, at the request of the Service, a file sample is located and forwarded by the Agency for an official agency, the Agency may, upon request, be reimbursed at the rate of $2.50 per sample by the Service.

TABLE 3.—MISCELLANEOUS SERVICES [1]

(1) Grain grading seminars (per hour per $45.00 service representative) [2]	$45.00
(2) Certification of diverter-type mechanical samplers (per hour per service representative) [2]	45.00
(3) Special weighing services (per hour per service representative) [2]	
(i) Scale testing and certification	45.00
(ii) Evaluation of weighing and material handling systems	45.00
(iii) NTEP Prototype evaluation (other than Railroad Track Scales)	45.00
(iv) NTEP Prototype evaluation of Railroad Track	45.00
Scales (plus usage fee per day for test car)	100.00
(v) Mass standards calibration and reverification	45.00
(vi) Special projects	45.00
(4) Foreign travel (per day per service representative)	420.00
(5) Online customized data EGIS service:	
(i) One data file per week for 1 year	500.00
(ii) One data file per month for 1 year	300.00
(6) Samples provided to interested parties (per sample)	2.50
(7) Divided-lot certificates (per certificate)	1.50
(8) Extra copies of certificates (per certificate)	1.50
(9) Faxing (per page)	1.50
(10) Special mailing (actual cost)	
(11) Preparing certificates onsite or during other than normal business hours (use hourly rates from Table 1).	

[1] Any requested service that is not listed will be performed at $45.00 per hour.
[2] Regular business hours—Monday thru Friday—service provided at other than regular hours charged at the applicable overtime hourly rate.

Dated: May 7, 1997.

James R. Baker,

Administrator.

[FR Doc. 97–12435 Filed 5–12–97; 8:45 am]

BILLING CODE 3410–EN–P

DEPARTMENT OF AGRICULTURE

Agricultural Marketing Service

7 CFR Part 1126

[DA–97–06]

Milk in the Texas Marketing Area; Notice of Proposed Suspension of Certain Provisions of the Order

AGENCY: Agricultural Marketing Service, USDA.

ACTION: Proposed suspension of rule.

SUMMARY: This document invites written comments on a proposal that would continue the suspension of segments of the pool plant and producer milk definitions of the Texas order for a two-year period. Associated Milk Producers, Inc., a cooperative association that represents producers who supply milk to the market, has requested the continuation of the suspension. The cooperative asserts that continuation of this suspension is necessary to ensure that dairy farmers who have historically supplied the Texas market will continue to have their milk priced under the Texas order without incurring costly and inefficient movements of milk.

DATES: Comments are due no later than June 12, 1997.

ADDRESSES: Comments (two copies) should be sent to USDA/AMS/Dairy Division, Order Formulation Branch, Room 2968, South Building, P.O. Box 96456, Washington, DC 20090–6456, (202) 720–9368.

FOR FURTHER INFORMATION CONTACT: Clifford M. Carman, Marketing Specialist, USDA/AMS/Dairy Division, Order Formulation Branch, Room 2968, South Building, P.O. Box 96456, Washington, DC 20090–6456, (202) 720–9368, e-mail address: Clifford__M__Carman@usda.gov.

SUPPLEMENTARY INFORMATION: The Department is issuing this proposed rule in conformance with Executive Order 12866.

This proposed rule has been reviewed under Executive Order 12988, Civil Justice Reform. This rule is not intended to have a retroactive effect. If adopted, this proposed rule will not preempt any state or local laws, regulations, or policies, unless they present an irreconcilable conflict with the rule.

The Agricultural Marketing Agreement Act of 1937, as amended (7 U.S.C. 601–674), provides that administrative proceedings must be exhausted before parties may file suit in court. Under section 608c(15)(A) of the Act, any handler subject to an order may request modification or exemption from such order by filing with the Secretary a petition stating that the order, any provision of the order, or any obligation imposed in connection with the order is not in accordance with law. A handler is afforded the opportunity for a hearing on the petition. After a hearing, the Secretary would rule on the petition. The Act provides that the district court of the United States in any district in which the handler is an inhabitant, or has its principal place of business, has jurisdiction in equity to review the Secretary's ruling on the petition, provided a bill in equity is filed not later than 20 days after the date of the entry of the ruling.

Small Business Consideration

In accordance with the Regulatory Flexibility Act (5 U.S.C. 601 et seq.), the Agricultural Marketing Service has considered the economic impact of this action on small entities and has certified that this proposed rule will not have a

significant economic impact on a substantial number of small entities. For the purpose of the Regulatory Flexibility Act, a dairy farm is considered a ''small business'' if it has an annual gross revenue of less than $500,000, and a dairy products manufacturer is a ''small business'' if it has fewer than 500 employees. For the purposes of determining which dairy farms are ''small businesses,'' the $500,000 per year criterion was used to establish a production guideline of 326,000 pounds per month. Although this guideline does not factor in additional monies that may be received by dairy producers, it should be an inclusive standard for most ''small'' dairy farmers. For purposes of determining a handler's size, if the plant is part of a larger company operating multiple plants that collectively exceed the 500-employee limit, the plant will be considered a large business even if the local plant has fewer than 500 employees.

For the month of March 1997, the milk of 1,805 producers was pooled on the Texas Federal milk order. Of these producers, 1,350 producers were below the 326,000-pound production guideline and are considered small businesses. During this same period, there were 24 handlers operating pool plants under the Texas order. Five of these handlers would be considered small businesses.

This rule proposes to continue the suspension of segments of the pool plant and producer milk definitions under the Texas order. This rule would lessen the regulatory impact of the order on certain milk handlers and would tend to ensure that dairy farmers would continue to have their milk priced under the order and thereby receive the benefits that accrue from such pricing.

Interested parties are invited to submit comments on the probable regulatory and informational impact of this proposed rule on small entities. Also, parties may suggest modifications of this proposal for the purpose of tailoring their applicability to small businesses.

Proposed Rule

Notice is hereby given that, pursuant to the provisions of the Act, the suspension of the following provisions of the order regulating the handling of milk in the Texas marketing area is being considered for the months of August 1, 1997, through July 31, 1999:

1. In § 1126.7(d) introductory text, the words ''during the months of February through July'' and the words ''under paragraph (b) or (c) of this section''.

2. In § 1126.7(e) introductory text, the words ''and 60 percent or more of the producer milk of members of the cooperative association (excluding such milk that is received at or diverted from pool plants described in paragraphs (b), (c), and (d) of this section) is physically received during the month in the form of a bulk fluid milk product at pool plants described in paragraph (a) of this section either directly from farms or by transfer from plants of the cooperative association for which pool plant status under this paragraph has been requested''.

3. In § 1126.13(e)(1), the words ''and further, during each of the months of September through January not less than 15 percent of the milk of such dairy farmer is physically received as producer milk at a pool plant''.

4. In § 1126.13, paragraph (e)(2).

5. In § 1126.13(e)(3), the sentence ''The total quantity of milk so diverted during the month shall not exceed one-third of the producer milk physically received at such pool plant during the month that is eligible to be diverted by the plant operator;''.

All persons who desire to submit written data, views or arguments about the proposed suspension should send two copies to USDA/AMS/Dairy Division, Order Formulation Branch, Room 2968, South Building, P.O. Box 96456, Washington, DC 20090–6456, by the 30th day after publication of this notice in the **Federal Register**.

All written submissions made pursuant to this notice will be made available for public inspection in the Dairy Division during regular business hours (7 CFR 1.27(b)).

Statement of Consideration

This action would continue the suspension of segments of the pool plant and producer milk definitions under the Texas order. This proposed suspension would be in effect from August 1997 through July 1999. The current suspension will expire July 31, 1997. The proposed action would continue the suspension of: (1) The 60 percent delivery standard for pool plants operated by cooperatives; (2) the diversion limitation applicable to cooperative associations; (3) the limits on the amount of milk that a pool plant operator may divert to nonpool plants; (4) the shipping standards that must be met by supply plants to be pooled under the order; and (5) the individual producer performance standards that must be met in order for a producer's milk to be eligible for diversion to a nonpool plant.

The order permits a cooperative association plant located in the marketing area to be a pool plant if at least 60 percent of the producer milk of members of the cooperative association is physically received at pool distributing plants during the month. In addition, a cooperative association may divert to nonpool plants up to one-third of the amount of milk that the cooperative causes to be physically received during the month at handlers' pool plants. The order also provides that the operator of a pool plant may divert to nonpool plants not more than one-third of the milk that is physically received during the month at the handler's pool plant. The proposed action would continue to inactivate the 60 percent delivery standard for plants operated by a cooperative association and remove the diversion limitations applicable to a cooperative association and to the operator of a pool plant.

The order also provides for regulating a supply plant each month in which it ships a sufficient percentage of its receipts to distributing plants. The order provides for pooling a supply plant that ships 15 percent of its milk receipts during August and December and 50 percent of its receipts during September through November and January. A supply plant that is pooled during each of the immediately preceding months of September through January is pooled under the order during the following months of February through July without making qualifying shipments to distributing plants. The requested action would continue the current suspension of these performance standards for supply plants that were regulated under the Texas order during each of the immediately preceding months of September through January.

The order also specifies that the milk of each producer must be physically received at a pool plant in order to be eligible for diversion to a nonpool plant. During the months of September through January, 15 percent of a producer's milk must be received at a pool plant for diversion eligibility. The proposed action would continue to suspend these requirements.

The continuation of the current suspension was requested by Associated Milk Producers, Inc., a cooperative association that represents a substantial number of dairy farmers who supply the Texas market. The cooperative stated that marketing conditions have not changed since the provisions were initially suspended and therefore should be continued until restructuring of the Federal order program is achieved as mandated in the 1996 Farm Bill.

The cooperative states that the continuation of the current suspension is necessary to ensure that dairy farmers who have historically supplied the Texas market will continue to have their milk priced under the Texas order. In

addition they maintain that the suspension would continue to provide handlers the flexibility needed to move milk supplies in the most efficient manner and to eliminate costly and inefficient movements of milk that would be made solely for the purpose of pooling the milk of dairy farmers who have historically supplied the market.

Accordingly, it may be appropriate to suspend the aforesaid provisions from August 1, 1997, through July 31, 1999.

List of Subjects in 7 CFR Part 1126

Milk marketing orders.

The authority citation for 7 CFR Part 1126 continues to read as follows:

Authority: 7 U.S.C. 601–674.

Dated: May 7, 1997.

Richard M. McKee,

Director, Dairy Division.

[FR Doc. 97–12502 Filed 5–12–97; 8:45 am]

BILLING CODE 3410–02–P

DEPARTMENT OF AGRICULTURE

Agricultural Marketing Service

7 CFR Part 1138

[DA–97–07]

Milk in the New Mexico-West Texas Marketing Area; Notice of Proposed Suspension of Certain Provisions of the Order

AGENCY: Agricultural Marketing Service, USDA.

ACTION: Proposed suspension of rule.

SUMMARY: This document invites written comments on a proposal that would continue the suspension of certain segments of the pool plant and producer milk definitions of the New Mexico-West Texas order for a two-year period. Associated Milk Producers, Inc. (AMPI), a cooperative association that represents a substantial number of the producers who supply milk to the market, has requested continuation of the suspension. The cooperative asserts that continuation of the suspension is necessary to ensure that dairy farmers who have historically supplied the New Mexico-West Texas order will continue to have their milk priced under the order without incurring costly and inefficient movements of milk.

DATES: Comments are due no later than June 12, 1997.

ADDRESSES: Comments (two copies) should be filed with the USDA/AMS/Dairy Division, Order Formulation Branch, Room 2971, South Building, P.O. Box 96456, Washington, DC 20090–6456.

FOR FURTHER INFORMATION CONTACT: Clifford M. Carman, Marketing Specialist, USDA/AMS/Dairy Division, Order Formulation Branch, Room 2971, South Building, P.O. Box 96456, Washington, DC 20090-6456, (202)720–9368, e-mail address: Clifford __ M __ Carman@usda.gov.

SUPPLEMENTARY INFORMATION: The Department is issuing this proposed rule in conformance with Executive Order 12866.

This proposed rule has been reviewed under Executive Order 12988, Civil Justice Reform. This rule is not intended to have a retroactive effect. If adopted, this proposed rule will not preempt any state or local laws, regulations, or policies, unless they present an irreconcilable conflict with the rule.

The Agricultural Marketing Agreement Act of 1937, as amended (7 U.S.C. 601–674), provides that administrative proceedings must be exhausted before parties may file suit in court. Under section 608c(15)(A) of the Act, any handler subject to an order may request modification or exemption from such order by filing with the Secretary a petition stating that the order, any provision of the order, or any obligation imposed in connection with the order is not in accordance with law. A handler is afforded the opportunity for a hearing on the petition. After a hearing, the Secretary would rule on the petition. The Act provides that the district court of the United States in any district in which the handler is an inhabitant, or has its principal place of business, has jurisdiction in equity to review the Secretary's ruling on the petition, provided a bill in equity is filed not later than 20 days after the date of the entry of the ruling.

Small Business Consideration

In accordance with the Regulatory Flexibility Act (5 U.S.C. 601 *et seq.*), the Agricultural Marketing Service has considered the economic impact of this action on small entities and has certified that this proposed rule will not have a significant economic impact on a substantial number of small entities. For the purpose of the Regulatory Flexibility Act, a dairy farm is considered a ''small business'' if it has an annual gross revenue of less than $500,000, and a dairy products manufacturer is a ''small business'' if it has fewer than 500 employees. For the purposes of determining which dairy farms are ''small businesses,'' the $500,000 per year criterion was used to establish a production guideline of 326,000 pounds per month. Although this guideline does not factor in additional monies that may be received by dairy producers, it should be an inclusive standard for most ''small '' dairy farmers. For purposes of determining a handler's size, if the plant is part of a larger company operating multiple plants that collectively exceed the 500-employee limit, the plant will be considered a large business even if the local plant has fewer than 500 employees.

For the month of March 1997, the milk of 174 producers was pooled on the New Mexico-West Texas Federal milk order. Of these producers, 26 producers were below the 326,000-pound production guideline and are considered small businesses. During this same period, there were 19 handlers operating pool plants under the New Mexico-West Texas order. Twelve of these handlers would be considered small businesses.

The proposed suspension would continue the current suspension of segments of the pool plant and producer milk definitions under the New Mexico-West Texas order. The provisions proposed for continued suspension limit the pooling of diverted milk. This rule would lessen the regulatory impact of the order on certain milk handlers and would tend to ensure that dairy farmers would continue to have their milk priced under the order and thereby receive the benefits that accrue from such pricing.

Interested parties are invited to submit comments on the probable regulatory and informational impact of this proposed rule on small entities. Also, parties may suggest modifications of this proposal for the purpose of tailoring their applicability to small businesses.

Proposed Rule

Notice is hereby given that, pursuant to the provisions of the Agricultural Marketing Agreement Act, the suspension of the following provisions of the order regulating the handling of milk in the New Mexico-West Texas marketing area is being considered for the months of October 1, 1997, through September 30, 1999:

1. In § 1138.7, paragraph (a)(1), the words ''including producer milk diverted from the plant,'';

2. In § 1138.7, paragraph (c), the words ''35 percent or more of the producer''; and

3. In § 1138.13(d), paragraphs (1), (2), and (5).

All persons who want to submit written data, views or arguments about the proposed suspension should send two copies of their views to the USDA/AMS/Dairy Division, Order Formulation Branch, Room 2971, South Building, P.O. Box 96456, Washington, DC 20090–

6456, by the 30th day after publication of this notice in the **Federal Register**.

All written submissions made pursuant to this notice will be made available for public inspection in the Dairy Division during regular business hours (7 CFR 1.27(b)).

Statement of Consideration

The proposed suspension would continue the current suspension of segments of the pool plant and producer milk definitions under the New Mexico-West Texas order. The provisions that are suspended limit the pooling of diverted milk. The proposed suspension would be in effect from October 1997 through September 1999. The current suspension will expire September 30, 1997.

The proposed suspension would continue the suspension of the following:

1. The requirement that milk diverted to a nonpool plant be considered a receipt at the distributing plant from which it was diverted;

2. The requirement that a cooperative must deliver at least 35 percent of its milk to pool distributing plants in order to pool a plant that the cooperative operates which is located in the marketing area and is neither a distributing plant nor a supply plant;

3. The requirement that a producer must deliver one day's production to a pool plant during the months of September through January to be eligible to be diverted to a nonpool plant;

4. The provision that limits a cooperative's diversions to nonpool plants to an amount equal to the milk it caused to be delivered to, and physically received at, pool plants during the month; and

5. The provision that excludes from the pool milk diverted from a pool plant to the extent that it would cause the plant to lose its status as a pool plant.

The continuation of the current suspension was requested by Associated Milk Producers, Inc., a cooperative association that represents a substantial number of dairy farmers who supply the New Mexico-West Texas market. The cooperative stated that marketing conditions have not changed since the provisions were suspended in 1993, and therefore should be continued until restructuring of the Federal order program is achieved as mandated in the 1996 Farm Bill.

The cooperative states that the continuation of the current suspension is necessary to ensure that dairy farmers who have historically supplied the New Mexico-West Texas market will continue to have their milk priced under this order. In addition, they maintain that the suspension would continue to provide handlers the flexibility needed to move milk supplies in the most efficient manner and to eliminate costly and inefficient movements of milk that would be made solely for the purpose of pooling the milk of dairy farmers who have historically supplied the market.

Accordingly, it may be appropriate to suspend the aforesaid provisions from October 1, 1997, through September 30, 1999.

List of Subjects in 7 CFR Part 1138

Milk marketing orders.

The authority citation for 7 CFR Part 1138 continues to read as follows:

Authority: 7 U.S.C. 601–674.

Dated: May 7, 1997.

Richard M. McKee,

Director, Dairy Division.

[FR Doc. 97–12501 Filed 5–12–97; 8:45 am]

BILLING CODE 3410–02–P

DEPARTMENT OF TRANSPORTATION

Federal Aviation Administration

14 CFR Part 39

[Docket No. 97–NM–46–AD]

RIN 2120–AA64

Airworthiness Directives; Empresa Brasileira de Aeronautica, S.A. (EMBRAER) Model EMB–120 Series Airplanes

AGENCY: Federal Aviation Administration, DOT.

ACTION: Notice of proposed rulemaking (NPRM).

SUMMARY: This document proposes the adoption of a new airworthiness directive (AD) that is applicable to all EMBRAER Model EMB–120 series airplanes. This proposal would require revising the Airplane Flight Manual (AFM) to include requirements for activation of the ice protection systems, and to add information regarding operation in icing conditions. This proposal also would require installing an ice detector system and revising the AFM to include procedures for testing system integrity. This proposal is prompted by reports indicating that flightcrews experienced difficulties controlling the airplane during (or following) flight in normal icing conditions, when the ice protection system either was not activated when ice began to accumulate on the airplane, or the ice protection system was never activated. These difficulties may have occurred because the flightcrews did not recognize that a significant enough amount of ice had formed on the airplane to require activation of the deicing equipment. The actions specified by the proposed AD are intended to ensure that the flightcrew is able to recognize the formation of significant ice accretion and take appropriate action; such formation of ice could result in reduced controllability of the airplane in normal icing conditions.

DATES: Comments must be received by June 24, 1997.

ADDRESSES: Submit comments in triplicate to the Federal Aviation Administration (FAA), Transport Airplane Directorate, ANM–103, Attention: Rules Docket No. 97–NM–46–AD, 1601 Lind Avenue, SW., Renton, Washington 98055–4056. Comments may be inspected at this location between 9:00 a.m. and 3:00 p.m., Monday through Friday, except Federal holidays.

The service information referenced in the proposed rule may be obtained from Embraer, Empresa Brasileira De Aeronautica S/A, Sao Jose Dos Campos, Brazil. This information may be examined at the FAA, Transport Airplane Directorate, 1601 Lind Avenue, SW., Renton, Washington; or at the FAA, Small Airplane Directorate, Atlanta Aircraft Certification Office, Campus Building, 1701 Columbia Avenue, Suite 2–160, College Park, Georgia.

FOR FURTHER INFORMATION CONTACT: Carla Worthey, Aerospace Engineer,Systems and Flight Test Branch, ACE–116A, FAA, Small Airplane Directorate, Atlanta Aircraft Certification Office, Campus Building, 1701 Columbia Avenue, Suite 2–160, College Park, Georgia 30337–2748; telephone (404) 305–7364; fax (404) 305–7348.

SUPPLEMENTARY INFORMATION:

Comments Invited

Interested persons are invited to participate in the making of the proposed rule by submitting such written data, views, or arguments as they may desire. Communications shall identify the Rules Docket number and be submitted in triplicate to the address specified above. All communications received on or before the closing date for comments, specified above, will be considered before taking action on the proposed rule. The proposals contained in this notice may be changed in light of the comments received.

Comments are specifically invited on the overall regulatory, economic, environmental, and energy aspects of the proposed rule. All comments submitted will be available, both before and after the closing date for comments, in the Rules Docket for examination by interested persons. A report summarizing each FAA-public contact concerned with the substance of this proposal will be filed in the Rules Docket.

Commenters wishing the FAA to acknowledge receipt of their comments submitted in response to this notice must submit a self-addressed, stamped postcard on which the following statement is made: ''Comments to Docket Number 97–NM–46–AD.'' The postcard will be date stamped and returned to the commenter.

Availability of NPRMs

Any person may obtain a copy of this NPRM by submitting a request to the FAA, Transport Airplane Directorate, ANM–103, Attention: Rules Docket No. 97–NM–46–AD, 1601 Lind Avenue, SW., Renton, Washington 98055–4056.

Discussion

The FAA has received reports indicating that the flightcrews of EMBRAER Model EMB–120 series airplanes experienced difficulties controlling the airplane during (or following) flight in normal icing conditions, when the ice protection system either was not activated when ice began to accumulate on the airplane, or the ice protection system was never activated. These difficulties may have occurred because the visual cues available to the flightcrew were not sufficient for the crew to recognize that enough ice had formed on the airplane to require activation of the deicing equipment. If the flightcrew is unable to recognize the formation of significant ice accretion [i.e., ¼- to ½-inch on the wing leading edges, as specified in the original FAA-approved Airplane Flight Manual (AFM) guidelines] on the airplane, appropriate action would not be taken to activate the deicing equipment. This condition, if not corrected, could result in reduced controllability of the airplane in normal icing conditions.

FAA's Determinations

The FAA is aware that, based on previous procedures provided to flightcrews of many airplanes equipped with deicing boots, a historical precedent has been set for waiting to activate the deicing equipment. In light of this information, and based on reports received, the FAA finds that certain procedures should be included in the Limitations and Normal Procedures Sections of the AFM for EMBRAER Model EMB–120 series airplanes. Additionally, an ice detector system should be installed on these airplanes to enable the flightcrew to more accurately determine the need to activate the ice protection systems on the airplane and to take appropriate action. The FAA has determined that such procedures must be included in the Limitations Section of the AFM for the affected airplanes to ensure that the flightcrew is aware of the potential hazard related to the formation of ice on the airplane, and of the procedures necessary to address it.

Explanation of Requirements of Proposed Rule

Since an unsafe condition has been identified that is likely to exist or develop on other products of this same type design, the proposed AD would require revising the Limitations Section of the AFM to include requirements for activation of the ice protection systems, and for revising the Normal Procedures Section of the AFM to add information regarding operation in icing conditions. This proposal also would require installing an ice detector system and revising the Normal Procedures Section of the AFM to include procedures for testing system integrity. The installation would be required to be accomplished in accordance with a method approved by the FAA.

Explanation of Proposed Compliance Time for Installation

Operators should note that paragraph (b) of this AD proposes a compliance time of 6 months for installation of an ice detector system. In developing an appropriate compliance time for this installation, the FAA considered not only the degree of urgency associated with addressing the subject unsafe condition, but the availability of required parts and the practical aspect of accomplishing the required installation within an interval of time that parallels normal scheduled maintenance for the majority of affected operators. The manufacturer has advised that an ample number of required parts will be available for installation of the ice detector systems on the U.S. fleet within the proposed compliance period.

Cost Impact

There are approximately 282 EMBRAER Model EMB–120 series airplanes of the affected design in the worldwide fleet. The FAA estimates that 220 airplanes of U.S. registry would be affected by this proposed AD.

The FAA estimates that it would take approximately 1 work hour per airplane to accomplish the proposed AFM revisions, and that the average labor rate is $60 per work hour. Based on these figures, the cost impact of the proposed AD on U.S. operators is estimated to be $13,200, or $60 per airplane.

The FAA estimates that it would take approximately 60 work hours per airplane to accomplish the proposed installation, and that the average labor rate is $60 per work hour. Required parts would cost approximately $15,000 per airplane. Based on these figures, the cost impact of the proposed AD on U.S. operators is estimated to be $4,092,000, or $18,600 per airplane.

The cost impact figures discussed above are based on assumptions that no operator has yet accomplished any of the proposed requirements of this AD action, and that no operator would accomplish those actions in the future if this AD were not adopted.

The FAA recognizes that the obligation to maintain aircraft in an airworthy condition is vital, but sometimes expensive. Because AD's require specific actions to address specific unsafe conditions, they appear to impose costs that would not otherwise be borne by operators. However, because of the general obligation of operators to maintain aircraft in an airworthy condition, this appearance is deceptive. Attributing those costs solely to the issuance of this AD is unrealistic because, in the interest of maintaining safe aircraft, prudent operators would accomplish the required actions even if they were not required to do so by the AD.

A full cost-benefit analysis has not been accomplished for this proposed AD. As a matter of law, in order to be airworthy, an aircraft must conform to its type design and be in a condition for safe operation. The type design is approved only after the FAA makes a determination that it complies with all applicable airworthiness requirements. In adopting and maintaining those requirements, the FAA has already made the determination that they establish a level of safety that is cost-beneficial. When the FAA, as in this proposed AD, makes a finding of an unsafe condition, this means that the original cost-beneficial level of safety is no longer being achieved and that the proposed actions are necessary to restore that level of safety. Because this level of safety has already been determined to be cost-beneficial, a full cost-benefit analysis for this proposed

AD would be redundant and unnecessary.

Regulatory Impact

The regulations proposed herein would not have substantial direct effects on the States, on the relationship between the national government and the States, or on the distribution of power and responsibilities among the various levels of government. Therefore, in accordance with Executive Order 12612, it is determined that this proposal would not have sufficient federalism implications to warrant the preparation of a Federalism Assessment.

For the reasons discussed above, I certify that this proposed regulation (1) is not a ''significant regulatory action'' under Executive Order 12866; (2) is not a ''significant rule'' under the DOT Regulatory Policies and Procedures (44 FR 11034, February 26, 1979); and (3) if promulgated, will not have a significant economic impact, positive or negative, on a substantial number of small entities under the criteria of the Regulatory Flexibility Act. A copy of the draft regulatory evaluation prepared for this action is contained in the Rules Docket. A copy of it may be obtained by contacting the Rules Docket at the location provided under the caption **ADDRESSES.**

List of Subjects in 14 CFR Part 39

Air transportation, Aircraft, Aviation safety, Safety.

The Proposed Amendment

Accordingly, pursuant to the authority delegated to me by the Administrator, the Federal Aviation Administration proposes to amend part 39 of the Federal Aviation Regulations (14 CFR part 39) as follows:

PART 39—AIRWORTHINESS DIRECTIVES

1. The authority citation for part 39 continues to read as follows:

Authority: 49 U.S.C. 106(g), 40113, 44701.

§ 39.13 [Amended]

2. Section 39.13 is amended by adding the following new airworthiness directive:

Empresa Brasileira de Aeronautica, S.A. (Embraer): Docket 97–NM–46–AD.

Applicability: All Model EMB–120 series airplanes, certificated in any category.

Note 1: This AD applies to each airplane identified in the preceding applicability provision, regardless of whether it has been otherwise modified, altered, or repaired in the area subject to the requirements of this AD. For airplanes that have been modified, altered, or repaired so that the performance of the requirements of this AD is affected, the owner/operator must request approval for an alternative method of compliance in accordance with paragraph (c) of this AD. The request should include an assessment of the effect of the modification, alteration, or repair on the unsafe condition addressed by this AD; and, if the unsafe condition has not been eliminated, the request should include specific proposed actions to address it.

Compliance: Required as indicated, unless accomplished previously.

To ensure that the flightcrew is able to recognize the formation of significant ice accretion, which could result in reduced controllability of the airplane in normal icing conditions, accomplish the following:

(a) Within 30 days after the effective date of this AD, accomplish paragraphs (a)(1), (a)(2), and (a)(3) of this AD.

(1) Revise the Limitations Section of the FAA-approved Airplane Flight Manual (AFM) to include the following requirements for activation of the ice protection systems. This may be accomplished by inserting a copy of this AD in the AFM.

''TURN ON ICE PROTECTION SYSTEM and IGNITION SWITCHES AS FOLLOWS:

• AOA, TAT, SLIP, and IGNITION SWITCHES:

—When atmospheric or ground icing conditions exist.

• PROPELLER:

—When atmospheric or ground icing conditions exist, OR

—At the first sign of ice formation anywhere on the aircraft.

• WING and TAIL LEADING EDGES, ENGINE AIR INLET, and WINDSHIELD:

—At the first sign of ice formation anywhere on the aircraft.

Note: Atmospheric icing conditions exist when:

—Outside Air Temperature (OAT) during ground operations or Total Air Temperature (TAT) in flight is 10 degrees C or below; and

—Visible moisture in any form is present (such as clouds, fog with visibility of one mile or less, rain, snow, sleet, or ice crystals).

Note: Ground icing conditions exist when:

—OAT during ground operations is 10 degrees C or below; and

—Surface snow, standing water, or slush is present on the ramps, taxiways, or runways.

Note: For Operation in Atmospheric Icing Conditions:

—Follow the procedures in the Normal Procedures Section under Operation in Icing Conditions.''

(2) Revise the Normal Procedures Section of the AFM by removing any icing procedures that contradict the procedures specified in paragraphs (a)(1) and (a)(3) of this AD from that section of the AFM. Where differences exist between the icing procedures specified in the Limitations and Normal Procedures Sections of the AFM, the procedures specified in the Limitations Section prevail.

(3) Revise the Normal Procedures Section of the FAA-approved Airplane Flight Manual (AFM) to include the following additional information regarding operation in icing conditions. This may be accomplished by inserting a copy of this AD in the AFM.

''Under DAILY CHECKS of the Ice Protection System, add the following:

Ice Detector System TEST Button (if installed)—PRESS Check normal test sequence.

Under OPERATION IN ICING CONDITIONS for FLYING INTO NORMAL ICING CONDITIONS, add the following:

—During flight, monitoring for icing conditions should start whenever the outside air temperature is near or below freezing or when operating into icing conditions, as specified in the Limitations Section of this manual.

—When operating in icing conditions, the front windshield corners (unheated areas), propeller spinners, and wing leading edges will provide good visual cues of ice accretion.

—For airplanes equipped with an ice detection system, icing conditions also will be indicated by the illumination of the ICE CONDITION light on the multiple alarm panel.

—When flying into known or forecast icing conditions, proceed as follows:

IGNITION Switches—ON
Airspeed—160 KIAS MINIMUM

If buffet onset occurs, increase airspeed.

Holding configuration:

Landing Gear Lever—UP
Flap Selector Lever—UP
N_P—85% MINIMUM

Increase N_P as required to eliminate propeller vibrations.

Approach procedure:

Increase approach speeds (according to the flap setting) by 10 KIAS until landing is assured.

Note: For airplanes equipped with an ice detection system, ice formation will be indicated by the ICE CONDITION light illumination on the multiple alarm panel.

CAUTION: The ice protection systems must be turned on immediately when the ICE CONDITION light illuminates on the multiple alarm panel or when any ice accretion is detected by visual observation or other cues.

CAUTION: Do not interrupt the automatic sequence of operation of the leading edge deice boots once it is turned ON. The system should be turned OFF only after leaving the icing conditions.''

(b) Within 6 months after the effective date of this AD, install an ice detector in accordance with a method approved by the Manager, Atlanta Aircraft Certification Office (ACO), FAA, Small Airplane Directorate.

(c) An alternative method of compliance or adjustment of the compliance time that provides an acceptable level of safety may be used if approved by the Manager, Atlanta ACO. Operators shall submit their requests through an appropriate FAA Principal Operations Inspector, who may add comments and then send it to the Manager, Atlanta ACO.

Note 2: Information concerning the existence of approved alternative methods of

compliance with this AD, if any, may be obtained from the Standardization Branch, ANM–113.

(d) Special flight permits may be issued in accordance with sections 21.197 and 21.199 of the Federal Aviation Regulations (14 CFR 21.197 and 21.199) to operate the airplane to a location where the requirements of this AD can be accomplished.

Issued in Renton, Washington, on May 7, 1997.

Neil D. Schalekamp,

Acting Manager, Transport Airplane Directorate, Aircraft Certification Service.

[FR Doc. 97–12519 Filed 5–12–97; 8:45 am]

BILLING CODE 4910–13–U

DEPARTMENT OF TRANSPORTATION

Federal Aviation Administration

14 CFR Part 39

[Docket No. 97–CE–05–AD]

RIN 2120–AA64

Airworthiness Directives; Raytheon Aircraft Company (formerly Beech Aircraft Corporation) 90, 100, 200 and 300 Series Airplanes

AGENCY: Federal Aviation Administration, DOT.

ACTION: Notice of proposed rulemaking (NPRM).

SUMMARY: This document proposes to adopt a new airworthiness directive (AD) that would apply to Raytheon Aircraft Company (formerly Beech Aircraft Corporation) 90, 100, 200 and 300 series airplanes. The proposed action would require inspecting gray, blue or clear Ethylene Vinyl Acetate (EVA) tubing near the co-pilot's foot warmer for collapse or deformity. If the tubing is collapsed or deformed, the proposed action would require replacing and re-routing the tubing. This EVA tubing is used on the pneumatic de-ice indicator lines and the pressurization control system pneumatic lines that provide vacuum to the outflow safety valves that depressurize the airplane. Several reports of collapsed EVA tubing prompted the proposed action. The actions specified by the proposed AD are intended to prevent a loss of vacuum to depressurize the airplane cabin, which could result in personal injury to the door operator; and to prevent malfunction of the de-ice indicator system, which could cause the pilot to immediately exit icing conditions.

DATES: Comments must be received on or before July 18, 1997.

ADDRESSES: Submit comments in triplicate to the Federal Aviation Administration (FAA), Central Region, Office of the Assistant Chief Counsel, Attention: Rules Docket No. 97–CE–05–AD, Room 1558, 601 E. 12th Street, Kansas City, Missouri 64106. Comments may be inspected at this location between 8 a.m. and 4 p.m., Monday through Friday, holidays excepted.

Service information that applies to the proposed AD may be obtained from Raytheon Aircraft Company, P.O. Box 85, Wichita, Kansas 67201–0085. This information also may be examined at the Rules Docket at the address above.

FOR FURTHER INFORMATION CONTACT: Mike Imbler, Aerospace Engineer, FAA, Wichita Aircraft Certification Office, 1801 Airport Road, Room 100, Mid-Continent Airport, Wichita, Kansas 67209; telephone (316) 946–4147, facsimile (316) 946–4407.

SUPPLEMENTARY INFORMATION:

Comments Invited

Interested persons are invited to participate in the making of the proposed rule by submitting such written data, views, or arguments as they may desire. Communications should identify the Rules Docket number and be submitted in triplicate to the address specified above. All communications received on or before the closing date for comments, specified above, will be considered before taking action on the proposed rule. The proposals contained in this notice may be changed in light of the comments received.

Comments are specifically invited on the overall regulatory, economic, environmental, and energy aspects of the proposed rule. All comments submitted will be available, both before and after the closing date for comments, in the Rules Docket for examination by interested persons. A report that summarizes each FAA-public contact concerned with the substance of this proposal will be filed in the Rules Docket.

Commenters wishing the FAA to acknowledge receipt of their comments submitted in response to this notice must submit a self-addressed, stamped postcard on which the following statement is made: ''Comments to Docket No. 97–CE–05–AD.'' The postcard will be date stamped and returned to the commenter.

Availability of NPRMs

Any person may obtain a copy of this NPRM by submitting a request to the FAA, Central Region, Office of the Assistant Chief Counsel, Attention: Rules Docket No. 97–CE–05–AD, Room 1558, 601 E. 12th Street, Kansas City, Missouri 64106.

Discussion

The FAA has received field reports on the following incidents:

- A pilot was having difficulty with ''pressure bumps'' while on the ground in a Raytheon Model 200 airplane,
- A door operator was opening a cabin door on a Raytheon Model C90A airplane and was thrown out of the airplane, and
- A passenger on a Raytheon Model B300 was attempting to open the cabin door and cabin pressure forced the door outward, damaging the door, door hinge, and door snubber.

In all of these incidents, further investigation revealed the EVA vacuum tubes for the pneumatic pressurization control system had collapsed. These pressurized control system vacuum tubes are routed adjacent to the de-ice indicator pneumatic tubes. The tubes are collapsing because they are located near the co-pilot's foot warmer outlet and associated plumbing.

This foot warmer is generating sufficient heat to deform and collapse the EVA tubing. Should the de-ice indicator pneumatic tube collapse or rupture from this heat source, the de-ice indicator will read zero. A zero reading from the de-ice indicator could cause the pilot to exit icing conditions unnecessarily.

Relevant Service Information

Raytheon Aircraft Company has issued Mandatory Service Bulletin No. 2676, Issued: January 1997, which specifies procedures for inspecting the affected airplanes for the condition of the pneumatic tubing and replacing the tubing if it is deformed or collapsed and re-routing the tubing. If the tubing is in good condition, then the service bulletin specifies re-routing the tubing away from the heat source.

The FAA's Determination

After examining the circumstances and reviewing all available information related to the incidents described above, the FAA has determined that AD action should be taken to prevent a loss of vacuum to depressurize the airplane cabin, which could result in personal injury to the door operator; and to prevent malfunction of the de-ice indicator system, which could cause the pilot to unnecessarily exit icing conditions.

Explanation of the Provisions of the Proposed AD

Since an unsafe condition has been identified that is likely to exist or

develop in other Raytheon Aircraft Company (formerly Beech Aircraft Corporation) 90, 100, 200, and 300 series airplanes of the same type design, the proposed AD would require inspecting the condition and proper routing of the gray, blue, or clear pneumatic pressurization control system tubes and the de-ice indicator pneumatic tubing located forward of the co-pilot's right outboard rudder pedal. If either tube is deformed or collapsed, the proposed action would require replacing the damaged section of tube with new nylon tubing, then re-routing and securing the tubing using aluminum tubing and hose clamps. If there is no evidence of damage to the tubing, the proposed action would only require re-routing and securing the tubing to ensure that it is at least 8 inches away from the discharge opening of the co-pilot's foot warmer outlet. Accomplishment of the proposed actions would be required in accordance with the service bulletin referenced previously.

Cost Impact

The FAA estimates that 2,515 airplanes in the U.S. registry would be affected by the proposed AD; that it would take approximately 6 workhours per airplane to accomplish the proposed inspection, repair, and re-routing of the tubing; and that the average labor rate is approximately $60 an hour. Parts would be covered under the manufacturer's warranty credit program. Based on these figures, the total cost impact of the proposed AD on U.S. operators is estimated to be $905,400 or $360 per airplane. The FAA has no way to determine the number of owners/operators of the affected airplanes who may have already accomplished this action.

Regulatory Impact

The regulations proposed herein would not have substantial direct effects on the States, on the relationship between the national government and the States, or on the distribution of power and responsibilities among the various levels of government. Therefore, in accordance with Executive Order 12612, it is determined that this proposal would not have sufficient federalism implications to warrant the preparation of a Federalism Assessment.

For the reasons discussed above, I certify that this action (1) is not a ''significant regulatory action'' under Executive Order 12866; (2) is not a ''significant rule'' under DOT Regulatory Policies and Procedures (44 FR 11034, February 26, 1979); and (3) if promulgated, will not have a significant economic impact, positive or negative, on a substantial number of small entities under the criteria of the Regulatory Flexibility Act. A copy of the draft regulatory evaluation prepared for this action has been placed in the Rules Docket. A copy of it may be obtained by contacting the Rules Docket at the location provided under the caption **ADDRESSES.**

List of Subjects in 14 CFR Part 39

Air transportation, Aircraft, Aviation safety, Safety.

The Proposed Amendment

Accordingly, pursuant to the authority delegated to me by the Administrator, the Federal Aviation Administration proposes to amend part 39 of the Federal Aviation Regulations (14 CFR part 39) as follows:

PART 39—AIRWORTHINESS DIRECTIVES

1. The authority citation for part 39 continues to read as follows:

Authority: 49 USC 106(g), 40113, 44701.

§ 39.13 [Amended]

2. Section 39.13 is amended by adding a new airworthiness directive (AD) to read as follows:

Raytheon Aircraft Company (formerly Beech Aircraft Company): Docket No. 97–CE–05–AD.

Applicability: The following Models and serial numbered airplanes, certificated in any category:

Models	Serial No.
C90 and C90A	LJ–683 through LJ–1463.
E90	LW–177 through LW–347.
F90	LA–1 through LA–236.
H90	LL–1 through LL–61.
A100	B–228 through B–247.
B100	BE–6 through BE–137.
200 and B200	BB–114 through BB–1553.
200C and B200C.	BL–1 through BL–72 and BL–124 through BL–140.
200CT and B200CT.	BN–1 through BN–4.
200T and B200T	BT–1 through BT–38.
300	FA–1 through FA–230 and FF–1 through FF–19.
B300	FL–1 through FL–154.
B300C	FM–1 through FM–9 and FN–1.
A200 (C–12C)	BC–19 through BC–75 and BD–15 through BD–30.
A200C (UC–12B).	BJ–1 through BJ–66.
A200CT (C–12D/F).	BP–1, BP–22, and BP–24 through BP–63.
A200CT (FWC–12D).	BP–7 through BP–11.
A200CT (RC–12D).	GR–1 through GR–13.
A200CT (RC–12H).	GR–14 through GR–19.
A200CT (RC–12G).	FC–1 through FC–3.
A200CT (RC–12K).	FE–1 through FE–9.
A200CT (RC–12N).	FE–10 through FE–31.
A200CT (RC–12P).	FE–33 and FE–35.
A200CT (RC–12Q).	FE–32, FE–34, and FE–36.
B200C (C–12F)	BL–73 through BL–112, BL–118 through BL–123, and BP–64 through BP–71.
B200C (C–12R)	BW–1 through BW–29.
B200C (UC–12F).	BU–1 through BU–10.
B200C (RC–12F).	BU–11 and BU–12.
B200C (UC–12M).	BV–1 through BV–10.
B200C (RC–12M).	BV–11 and BV–12.
B200CT (FWC–12D).	FG–1 and FG–2.

Note 1: This AD applies to each airplane identified in the preceding applicability provision, regardless of whether it has been modified, altered, or repaired in the area subject to the requirements of this AD. For airplanes that have been modified, altered, or repaired so that the performance of the requirements of this AD is affected, the owner/operator must request approval for an alternative method of compliance in accordance with paragraph (e) of this AD. The request should include an assessment of the effect of the modification, alteration, or repair on the unsafe condition addressed by this AD; and, if the unsafe condition has not been eliminated, the request should include specific proposed actions to address it.

Compliance: Required within the next 200 hours time-in-service (TIS) after the effective date of this AD, unless already accomplished.

To prevent a loss of vacuum to depressurize the airplane cabin, which could result in personal injury to the door operator; and to prevent malfunction of the de-ice indicator system which could cause the pilot to unnecessarily exit icing conditions, accomplish the following:

(a) Inspect for collapse, deformation, and proper routing of the gray, blue, or clear pneumatic pressurization control system tubes and the de-ice indicator pneumatic tubing located forward of the co-pilot's right outboard rudder pedal in accordance with the ACCOMPLISHMENT INSTRUCTIONS section and Figure 1 of the Raytheon Aircraft Company (Raytheon) Mandatory Service Bulletin (SB) No. 2676, Issued: January 1997.

(b) If any of this tubing is deformed or collapsed, prior to further flight, replace the damaged section of tube with new nylon tubing, then use aluminum tubing and hose clamps to secure and re-route the tubing at least 8 inches away from the discharge opening of the co-pilot's foot warmer outlet in accordance with the ACCOMPLISHMENT INSTRUCTIONS section and Figure 2 of the Raytheon Mandatory SB No. 2676, January 1997.

(c) If there is no evidence of damage to the tubing, prior to further flight, re-route and secure the tubing as specified in paragraph (b) of this AD in accordance with the ACCOMPLISHMENT INSTRUCTIONS section of the Raytheon Mandatory SB No. 2676, Issued: January 1997.

(d) Special flight permits may be issued in accordance with sections 21.197 and 21.199 of the Federal Aviation Regulations (14 CFR 21.197 and 21.199) to operate the airplane to a location where the requirements of this AD can be accomplished.

(e) An alternative method of compliance or adjustment of the compliance time that provides an equivalent level of safety may be approved by the Manager, Wichita Aircraft Certification Office, 1801 Airport Road, Room 100, Mid-Continent Airport, Wichita, Kansas 67209. The request shall be forwarded through an appropriate FAA Maintenance Inspector, who may add comments and then send it to the Manager, Wichita Aircraft Certification Office.

Note 2: Information concerning the existence of approved alternative methods of compliance with this AD, if any, may be obtained from the Wichita Aircraft Certification Office.

(f) All persons affected by this directive may obtain copies of this document referred to herein upon request to Raytheon Aircraft Company, P.O. Box 85, Wichita, Kansas 67201–0085; or may examine this document at the FAA, Central Region, Office of the Assistant Chief Counsel, Room 1558, 601 E. 12th Street, Kansas City, Missouri 64106.

Issued in Kansas City, Missouri, on May 7, 1997.

Henry A. Armstrong,

Acting Manager, Small Airplane Directorate, Aircraft Certification Service.

[FR Doc. 97–12518 Filed 5–12–97; 8:45 am]

BILLING CODE 4910–13–U

DEPARTMENT OF TRANSPORTATION

Federal Aviation Administration

14 CFR Part 71

[Airspace Docket No. 97–AGL–9]

Establishment of Class E Airspace; McLaughlin, SD, McLaughlin Municipal Airport

AGENCY: Federal Aviation Administration (FAA), DOT.

ACTION: Notice of proposed rulemaking.

SUMMARY: This notice proposes to establish Class E airspace at McLaughlin, SD. A Global Positioning System (GPS) standard instrument approach procedure (SIAP) to Runway 31 has been developed for McLaughlin Municipal Airport. Controlled airspace extending upward from 700 to 1200 feet above ground level (AGL) is needed to contain aircraft executing the approach. The intended affect of this proposal is to provide segregation of aircraft using instrument approach procedures in instrument conditions from other aircraft operating in visual weather conditions.

DATES: Comments must be received on or before June 25, 1997.

ADDRESSES: Send comments on the proposal in triplicate to: Federal Aviation Administration, Office of the Assistant Chief Counsel, AGL–7, Rules Docket No. 97–AGL–9, 2300 East Devon Avenue, Des Plaines, Illinois 60018.

The official docket may be examined in the Office of the Assistant Chief Counsel, Federal Aviation Administration, 2300 East Devon Avenue, Des Plaines, Illinois. An informal docket may also be examined during normal business hours at the Air Traffic Division, Operations Branch, Federal Aviation Administration, 2300 East Devon Avenue, Des Plaines, Illinois.

FOR FURTHER INFORMATION CONTACT: John A. Clayborn, Air Traffic Division, Operations Branch, AGL–530, Federal Aviation Administration, 2300 East Devon Avenue, Des Plaines, Illinois 60018, telephone (847) 294–7568.

SUPPLEMENTARY INFORMATION:

Comments Invited

Interested parties are invited to participate in this proposed rulemaking by submitting such written data, views, or arguments as they made desire. Comments that provide the factual basis supporting the views and suggestions presented are particularly helpful in developing reasoned regulatory decisions on the proposal. Comments are specifically invited on the overall regulatory, aeronautical, economic, environmental, and energy-related aspects of the proposal. Communications should identify the airspace docket number and be submitted in triplicate to the address listed above. Commenters wishing the FAA to acknowledge receipt of their comments on this notice must submit with those comments a self-addressed, stamped postcard on which the following statement is made: ''Comments to Airspace Docket No. 97–AGL–9.'' The postcard will be date/time stamped and returned to the commenter. All communications received on or before the specified closing date for comments will be considered before taking action on the proposed rule. The proposal contained in this notice may be changed in light of comments received. All comments submitted will be available for examination in the Rules Docket, FAA, Great Lakes Region, Office of the Assistant Chief Counsel, 2300 East Devon Avenue, Des Plaines, Illinois, both before and after the closing date for comments. A report summarizing each substantive public contact with FAA personnel concerned with this rulemaking will be filed in the docket.

Availability of NPRM's

Any person may obtain a copy of the Notice of Proposed Rulemaking (NPRM) by submitting a request to the Federal Aviation Administration, Office of Public Affairs, Attention: Public Inquiry Center, APA–230, 800 Independence Avenue, SW., Washington, DC 20591, or by calling (202) 267–3484. Communications must identify the notice number of this NPRM. Persons interested in being placed on a mailing list for future NPRM's should also request a copy of Advisory Circular No. 11–2A, which describes the application procedure.

The Proposal

The FAA is considering an amendment to part 71 of the Federal Aviation Regulations (14 CFR part 71) to establish Class E airspace at McLaughlin, SD; this proposal would provide adequate Class E airspace for operators executing the GPS Runway 31 SIAP at McLaughlin Municipal Airport. Controlled airspace extending upward from 700 to 1200 feet AGL is needed to contain aircraft executing the approach. The intended effect of this action is to provide segregation of aircraft using instrument approach procedures in instrument conditions from other aircraft operating in visual weather conditions. The area would be depicted on appropriate aeronautical charts thereby enabling pilots to circumnavigate the area or otherwise comply with IFR procedures. Class E airspace designations for airspace areas extending upward from 700 feet or more above the surface of the earth are published in paragraph 6005 of FAA Order 7400.9D dated September 4, 1996, and effective September 16, 1996, which is incorporated by reference in 14 CFR 71.1. The Class E airspace designation listed in this document would be published subsequently in the Order.

The FAA has determined that this proposed regulation only involves an established body of technical regulations for which frequent and routine amendments are necessary to keep them operationally current. Therefore this, proposed regulation—(1) is not a ''significant regulatory action'' under Executive Order 12866; (2) is not a ''significant rule'' under DOT Regulatory Policies and Procedures (44 FR 11034; February 26, 1979); and (3)

does not warrant preparation of a Regulatory Evaluation as the anticipated impact is so minimal. Since this is a routine matter that will only affect air traffic procedures and air navigation, it is certified that this proposed rule will not have a significant economic impact on a substantial number of small entities under the criteria of the Regulatory Flexibility Act.

List of Subjects in 14 CFR Part 71

Airspace, Incorporation by reference, Navigation (air).

The Proposed Amendment

Accordingly, pursuant to the authority delegated to me, the Federal Aviation Administration proposes to amend part 71 of the Federal Aviation Regulations (14 CFR part 71) as follows:

PART 71—[AMENDED]

1. The authority citation for part 71 continues to read as follows:

Authority: 49 U.S.C. 106(g), 40103, 40113, 40120; E.O. 10854, 24 FR 9565, 3 CFR, 1959–1963 Comp., p. 389; 14 CFR 11.69.

§ 71.1 [Amended]

2. The incorporation by reference in 14 CFR 71.1 of the Federal Aviation Administration Order 7400.9D, Airspace Designations and Reporting Points, dated September 4, 1996, and effective September 16, 1996, is amended as follows:

Paragraph 6005 Class E airspace areas extending upward from 700 feet or more above the surface of the earth.

* * * * *

AGL SD E5 McLaughlin, SD [New]

McLaughlin Municipal Airport, SD
(Lat. 45°47′49″ N, long. 100°47′03″ W)
Bismark VOR/DME, ND
(Lat. 46°45′42″ N, long. 100°39′55″ W)

That airspace extending upward from 700 feet above the surface within a 6.4-mile radius of the McLaughlin Municipal Airport, and within 1.5 miles each side of the 140° bearing from the airport extending from the 6.4-mile radius to 9.8 miles southeast of the airport, and that airspace extending upward from 1,200 feet above the surface bounded on the west and southwest by V169, on the east, northeast, and southeast by V71, on the south by V344, and on the north by the Bismark, ND, VOR/DME 36-mile radius, excluding that airspace within the Mobridge, SD, Class E surface area, excluding all Federal airways.

* * * * *

Issued in Des Plaines, Illinois on April 25, 1997.

Maureen Woods,

Manager, Air Traffic Division.

[FR Doc. 97–12446 Filed 5–12–97; 8:45 am]

BILLING CODE 4910–13–M

DEPARTMENT OF TRANSPORTATION

Federal Aviation Administration

14 CFR Part 71

[Airspace Docket No. 97–AGL–10]

Establishment of Class E Airspace; Harvey, ND, Harvey Municipal Airport

AGENCY: Federal Aviation Administration (FAA), DOT.

ACTION: Notice of proposed rulemaking.

SUMMARY: This notice proposes to establish Class E airspace at Harvey, ND. A Global Positioning System (GPS) standard instrument approach procedure (SIAP) to Runway 11 and a GPS SIAP to Runway 29 has been developed for Harvey Municipal Airport. Controlled airspace extending upward from 700 to 1200 feet above ground level (AGL) is needed to contain aircraft executing the approach. The intended affect of this proposal is to provide segregation of aircraft using instrument approach procedures in instrument conditions from other aircraft operating in visual weather conditions.

DATES: Comments must be received on or before June 25, 1997.

ADDRESSES: Send comments on the proposal in triplicate to: Federal Aviation Administration, Office of the Assistant Chief Counsel, AGL–7, Rules Docket No. 97–AGL–10, 2300 East Devon Avenue, Des Plaines, Illinois 60018.

The official docket may be examined in the Office of the Assistant Chief Counsel, Federal Aviation Administration, 2300 East Devon Avenue, Des Plaines, Illinois. An informal docket may also be examined during normal business hours at the Air Traffic Division, Operations Branch, Federal Aviation Administration, 2300 East Devon Avenue, Des Plaines, Illinois.

FOR FURTHER INFORMATION CONTACT: John A. Clayborn, Air Traffic Division, Operations Branch, AGL–530, Federal Aviation Administration, 2300 East Devon Avenue, Des Plaines, Illinois 60018, telephone (847) 294–7568.

SUPPLEMENTARY INFORMATION:

Comments Invited

Interested parties are invited to participate in this proposed rulemaking by submitting such written data, views, or arguments as they may desire. Comments that provide the factual basis supporting the views and suggestions presented are particularly helpful in developing reasoned regulatory decisions on the proposal. Comments are specifically invited on the overall regulatory, aeronautical, economic, environmental, and energy-related aspects of the proposal. Communications should identify the airspace docket number and be submitted in triplicate to the address listed above. Commenters wishing the FAA to acknowledge receipt of their comments on this notice must submit with those comments a self-addressed, stamped postcard on which the following statement is made: ''Comments to Airspace Docket No. 97–AGL–10.'' The postcard will be date/time stamped and returned to the commenter. All communications received on or before the specified closing date for comments will be considered before taking action on the proposed rule. The proposal contained in this notice may be changed in light of comments received. All comments submitted will be available for examination in the Rules Docket, FAA, Great Lakes Region, Office of the Assistant Chief Counsel, 2300 East Devon Avenue, Des Plaines, Illinois, both before and after the closing date for comments. A report summarizing each substantive public contact with FAA personnel concerned with this rulemaking will be filed in the docket.

Availability of NPRM's

Any person may obtain a copy of the Notice of Proposed Rulemaking (NPRM) by submitting a request to the Federal Aviation Administration, Office of Public Affairs, Attention: Public Inquiry Center, APA–230, 800 Independence Avenue, S.W., Washington, DC 20591, or by calling (202) 267–3484. Communications must identify the notice number of this NPRM. Persons interested in being placed on a mailing list for future NPRM's should also request a copy of Advisory Circular No. 11–2A, which describes the application procedure.

The Proposal

The FAA is considering an amendment to part 71 of the Federal Aviation Regulations (14 CFR part 71) to establish Class E airspace at Harvey, ND; this proposal would provide adequate Class E airspace for operators executing the GPS Runway 11 SIAP and GPS Runway 29 SIAP at Harvey Municipal Airport. Controlled airspace extending upward from 700 to 1200 feet AGL is needed to contained aircraft executing the approach. The intended affect of this action is to provide segregation of aircraft using instrument approach procedures in instrument conditions from other aircraft operating in visual

weather conditions. The area would be depicted on appropriate aeronautical charts thereby enabling pilots to circumnavigate the area or otherwise comply with IFR procedures. Class E airspace designations for airspace areas extending upward from 700 feet or more above the surface of the earth are published in paragraph 6005 of FAA Order 7400.9D dated September 4, 1996, and effective September 16, 1996, which is incorporated by reference in 14 CFR 71.1. The Class E airspace designation listed in this document would be published subsequently in the Order.

The FAA has determined that this proposed regulation only involves an established body of technical regulations for which frequent and routine amendments are necessary to keep them operationally current. Therefore this, proposed regulation—(1) is not a ''significant regulatory action'' under Executive Order 12866; (2) is not a ''significant rules'' under DOT Regulatory Polices and Procedures (44 FR 11034; February 26, 1979); and (3) does not warrant preparation of a Regulatory Evaluation as the anticipated impact is so minimal. Since this is a routine matter that will only affect air traffic procedures and air navigation, it is certified that this proposed rule will not have a significant economic impact on a substantial number of small entities under the criteria of the Regulatory Flexibility Act.

List of Subjects in 14 CFR Part 71

Airspace, Incorporation by references, Navigation (air).

The Proposed Amendment

Accordingly, pursuant to the authority delegated to me, the Federal Aviation Administration proposes to amend part 71 of the Federal Aviation Regulations (14 CFR part 71) as follows:

PART 71—[AMENDED]

1. The authority citation for part 71 continues to read as follows:

Authority: 49 U.S.C. 106(g), 40103, 40113, 40120; E.O. 10854, 24 FR 9565, 3 CFR, 1959–1963 Comp., 389; 14 CFR 11.69.

§ 71.1 [Amended]

2. The incorporation by reference in 14 CFR 71.1 of the Federal Aviation Administration Order 7400.9D, Airspace Designations and Reporting Points, dated September 4, 1996, and effective September 16, 1996, is amended as follows:

Paragraph 6005 Class E airspace areas extending upward from 700 feet or more above the surface of the earth.

* * * * *

AGL ND E5 Harvey, ND [New]

(Lat. 47°47′28″ N, long. 99°55′54″ W)
Minot AFB, ND
(Lat. 48°24′56″ N, long. 101°21′28″ W)
Bismark VOR/DME
(Lat. 46°45′42″ N, long. 100°39′55″ W)

That airspace extending upward from 700 feet above the surface within a 6.3-mile radius of the Harvey Municipal Airport, and that airspace extending upward from 1,200 feet above the surface bounded on the north by V430, on the southwest by V15, on the west by the 47-mile radius of Minot Air Force Base, on the south-southwest by the Bismark VOR/DME 36-mile radius, on the east and southeast by V169, on the east by that area bounded by V169 along latitude 47°30′00″ N, then north along latitude 99°19′00″ W to the area bounded by V169, excluding all Federal airways.

* * * * *

Issued in Des Plaines, Illinois on April 25, 1997.

Maureen Woods,

Manager, Air Traffic Division.

[FR Doc. 97–12445 Filed 5–12–97; 8:45 am]

BILLING CODE 4910–13–M

DEPARTMENT OF TRANSPORTATION

Federal Aviation Administration

14 CFR Part 71

[Airspace Docket No. 97–AGL–8]

Establishment of Class E Airspace; Perham, MN, Perham Municipal Airport

AGENCY: Federal Aviation Administration (FAA), DOT.

ACTION: Notice of proposed rulemaking.

SUMMARY: This notice proposes to establish Class E airspace at Perham, MN. A Global Positioning System (GPS) standard instrument approach procedure (SIAP) to Runway 30 has been developed for Perham Municipal Airport. Controlled airspace extending upward from 700 to 1200 feet above ground level (AGL) is needed to contain aircraft executing the approach. The intended affect of this proposal is to provide segregation of aircraft using instrument approach procedures in instrument conditions from other aircraft operating in visual weather conditions.

DATES: Comments must be received on or before June 25, 1997.

ADDRESSES: Send comments on the proposal in triplicate to: Federal Aviation Administration, Office of the Assistant Chief Counsel, AGL–7, Rules Docket No. 97–AGL–8, 2300 East Devon Avenue, Des Plaines, Illinois 60018.

The official docket may be examined in the Office of the Assistant Chief Counsel, Federal Aviation Administration, 2300 East Devon Avenue, Des Plaines, Illinois. An informal docket may also be examined during normal business hours at the Air Traffic Division, Operations Branch, Federal Aviation Administration, 2300 East Devon Avenue, Des Plaines, Illinois.

FOR FURTHER INFORMATION CONTACT: John A. Clayborn, Air Traffic Division, Operations Branch, AGL–530, Federal Aviation Administration, 2300 East Devon Avenue, Des Plaines, Illinois 60018, telephone (847) 294–7568.

SUPPLEMENTARY INFORMATION:

Comments Invited

Interested parties are invited to participate in this proposed rulemaking by submitting such written data, views, or arguments as they may desire. Comments that provide the factual basis supporting the views and suggestions presented are particularly helpful in developing reasoned regulatory decisions on the proposal. Comments are specifically invited on the overall regulatory, aeronautical, economic, environmental, and energy-related aspects of the proposal. Communications should identify the airspace docket number and be submitted in triplicate to the address listed above. Commenters wishing the FAA to acknowledge receipt of their comments on this notice must submit with those comments a self-addressed, stamped postcard on which the following statement is made: ''Comments to Airspace Docket No. 97–AGL–8.'' The postcard will be date/time stamped and returned to the commenter. All communications received on or before the specified closing date for comments will be considered before taking action on the proposed rule. The proposal contained in this notice may be changed in light of comments received. All comments submitted will be available for examination in the Rules Docket, FAA, Great Lakes Region, Office of the Assistant Chief Counsel, 2300 East Devon Avenue, Des Plaines, Illinois, both before and after the closing date for comments. A report summarizing each substantive public contact with FAA personnel concerned with this rulemaking will be filed in the docket.

Availability of NPRM's

Any person may obtain a copy of the Notice of Proposed Rulemaking (NPRM) by submitting a request to the Federal Aviation Administration, Office of Public Affairs, Attention: Public Inquiry Center, APA–230, 800 Independence Avenue, SW., Washington, DC 20591, or

by calling (202) 267–3484. Communications must identify the notice number of this NPRM. Persons interested in being placed on a mailing list for future NPRM's should also request a copy of Advisory Circular No. 11–2A, which describes the application procedure.

The Proposal

The FAA is considering an amendment to part 71 of the Federal Aviation Regulations (14 CFR part 71) to establish Class E airspace at Perham, MN; this proposal would provide adequate Class E airspace for operators executing the GPS Runway 30 SIAP at Perham Municipal Airport. Controlled airspace extending upward from 700 to 1200 feet AGL is needed to contain aircraft executing the approach. The intended affect of this action is to provide segregation of aircraft using instrument approach procedures in instrument conditions from other aircraft operating in visual weather conditions. The area would be depicted on appropriate aeronautical charts thereby enabling pilots to circumnavigate the area or otherwise comply with IFR procedures. Class E airspace designations for airspace areas extending upward from 700 feet or more above the surface of the earth are published in paragraph 6005 of FAA Order 7400.9D dated September 4, 1996, and effective September 16, 1996, which is incorporated by reference in 14 CFR 71.1. The Class E airspace designation listed in this document would be published subsequently in the Order.

The FAA has determined that this proposed regulation only involves an established body of technical regulations for which frequent and routine amendments are necessary to keep them operationally current. Therefore this, proposed regulation—(1) is not a ''significant regulatory action'' under Executive Order 12866; (2) is not a ''significant rule'' under DOT Regulatory Policies and Procedures (44 FR 11034; February 26, 1979); and (3) does not warrant preparation of a Regulatory Evaluation as the anticipated impact is so minimal. Since this is a routine matter that will only affect air traffic procedures and air navigation, it is certified that this proposed rule will not have a significant economic impact on a substantial number of small entities under the criteria of the Regulatory Flexibility Act.

List of Subjects in 14 CFR Part 71

Airspace, Incorporation by reference, Navigation (air).

The Proposed Amendment

Accordingly, pursuant to the authority delegated to me, the Federal Aviation Administration proposes to amend part 71 of the Federal Aviation Regulations (14 CFR part 71) as follows:

PART 71—[AMENDED]

1. The authority citation for part 71 continues to read as follows:

Authority: 49 U.S.C. 106(g), 40103, 40113, 40120; E.O. 10854, 24 FR 9565, 3 CFR, 1959–1963 Comp., p. 389; 14 CFR 11.69.

§ 71.1 [Amended]

2. The incorporation by reference in 14 CFR 71.1 of the Federal Aviation Administration Order 7400.9D, Airspace Designations and Reporting Points, dated September 4, 1996, and effective September 16, 1996, is amended as follows:

Paragraph 6005 Class E airspace areas extending upward from 700 feet or more above the surface of the earth.

* * * * *

AGL MN E5 Perham, MN [New]

Perham Municipal airport, MN
(Lat. 46°36′40″ N, long. 95°36′22″ W)

That airspace extending upward from 700 feet above the surface within a 6.5-mile radius of the Perham Municipal Airport.

* * * * *

Issued in Des Plaines, Illinois on April 25, 1997.

Maureen Woods,

Manager, Air Traffic Division.

[FR Doc. 97–12447 Filed 5–12–97; 8:45 am]

BILLING CODE 4910–13–M

ENVIRONMENTAL PROTECTION AGENCY

40 CFR Part 81

[MN41–01–7266b; FRL–5820–7]

Designation of Areas for Air Quality Planning Purposes; Minnesota

AGENCY: Environmental Protection Agency.

ACTION: Proposed rule.

SUMMARY: The Environmental Protection Agency (EPA) is proposing to approve the St. Paul Park Area redesignation request submitted by the State of Minnesota on October 31, 1995. The State requested that portions of Dakota and Washington Counties (the areas surrounding the Ashland Petroleum Company) be redesignated to attainment for the sulfur dioxide National Ambient Air Quality Standard. All future references to the areas surrounding the Ashland Petroleum Company will be made using St. Paul Park.

A detailed rationale for the approval of the St. Paul Park Area redesignation request is set forth in the direct final rule. If no adverse comments are received in response to this proposed rule, no further activity is contemplated in relation to this rule. If EPA receives adverse comments, the direct final rule will be withdrawn and all public comments received will be addressed in a subsequent final rule based on this proposed rule. EPA will not institute a second comment period on this action. Any parties interested in commenting on this action should do so at this time.

DATES: Comments on this request and on the proposed EPA action must be received by June 12, 1997.

ADDRESSES: Copies of the revision request are available for inspection at the following address: Environmental Protection Agency, Region 5, Air and Radiation Division, 77 West Jackson Boulevard, Chicago, Illinois 60604. (It is recommended that you telephone Todd Nettesheim at (312) 353–9153 before visiting the Region 5 Office.)

Written comments should be addressed to: Carlton Nash, Chief, Regulation Development Section, Air Programs Branch (AR–18J), United States Environmental Protection Agency, 77 West Jackson Boulevard, Chicago, Illinois 60604.

FOR FURTHER INFORMATION CONTACT: Todd Nettesheim, Air Programs Branch, Regulation Development Section (AR–18J), United States Environmental Protection Agency, Region 5, 77 West Jackson Boulevard, Chicago, Illinois 60604, (312) 353–9153.

SUPPLEMENTARY INFORMATION: See the information provided in the Direct Final action of the same title which is located in the Rules and Regulations Section of this **Federal Register**.

Executive Order 12866

The Office of Management and Budget has exempted this rule from the requirement of Section 6 of Executive Order 12866.

List of Subjects in 40 CFR Part 81

Environmental protection, Air pollution control.

Authority: 42 U.S.C. 7401–7671q.

Dated: April 23, 1997.

Valdas V. Adamkus,

Regional Administrator.

[FR Doc. 97–11993 Filed 5–12–97; 8:45 am]

BILLING CODE 6560–50–P

ENVIRONMENTAL PROTECTION AGENCY

40 CFR Part 228

[FRL–5825–1]

Simultaneous De-designation and Termination of the Mud Dump Site and Designation of the Historic Area Remediation Site

AGENCY: Environmental Protection Agency.

ACTION: Proposed rule.

SUMMARY: The Environmental Protection Agency (EPA) is proposing today to de-designate and terminate the New York Bight Dredged Material Disposal Site (also known as the Mud Dump Site) as of September 1, 1997. The Mud Dump Site was designated in 1984 for the disposal of 100 million cubic yards of dredged material from navigational dredging and other dredging projects associated with the Port of New York and New Jersey and nearby harbors. Simultaneous with closure of the Mud Dump Site, the site and surrounding areas that have been used historically as disposal sites for dredged materials will be redesignated under 40 CFR part 228 as the Historic Area Remediation Site. The Historic Area Remediation Site will be managed to reduce impacts of historical disposal activities at the site to acceptable levels (in accordance with 40 CFR 228.11(c)). This amendment will, when finalized, identify for remediation an area in and around the Mud Dump Site which has exhibited the potential for adverse ecological impacts. As discussed further below, the Historic Area Remediation Site will be remediated with uncontaminated dredged material (i.e., dredged material that meets current Category I standards and will not cause significant undesirable effects including through bioaccumulation) (hereinafter referred to as ''the Material for Remediation'' or ''Remediation Material'').

DATES: Comments must be received on or before June 30, 1997. The public hearing dates are as follows:

1. June 16, 1997, at 7:00 PM: Monmouth Beach, New Jersey.
2. June 17, 1997, at 7:00 PM: Long Island, NY.
3. June 18, 1997, at 2:00 PM: New York, New York.

ADDRESSES: Comments on this proposed rule should be addressed to: Mr. Mario P. Del Vicario, Chief, Place Based Protection Branch, U.S. Environmental Protection Agency Region 2, 290 Broadway, New York, NY 10007–1866 (E-mail delvicario.mario@epamail.epa.gov). The official record of this rulemaking is available for inspection at the EPA Region 2 Library, 16th Floor, 290 Broadway, New York, NY 10007–1866. For access to the docket materials, call Karen Schneider at (212) 637–3189 between 9:00 am and 3:30 pm Monday through Friday, excluding legal holidays, for an appointment. The record is also available for viewing at EPA's Region 2 Field Office Library, 2890 Woodbridge Avenue, Building 209, MS–245, Edison, New Jersey 08837. For access to the docket materials, call Ms. Dorothy Szefczyk (908) 321–6762 between 9:00 am and 3:30 pm Monday through Friday, excluding legal holidays, for an appointment. The EPA public information regulation (40 CFR Part 2) provides that a reasonable fee may be charged for copying.

The public hearing locations are as follows:

1. New Jersey—Monmouth Beach Municipal Auditorium, 22 Beach Road, Monmouth Beach, New Jersey, 07750.
2. Long Island, NY—Social Services Building Auditorium, County Seat Drive, Mineola, Long Island, NY 11501.
3. New York, NY—Oval Room, Port Authority of New York/New Jersey, Floor 43, 1 World Trade Center, New York, New York 10048.

FOR FURTHER INFORMATION CONTACT: Mr. Mario P. Del Vicario, Chief, Place Based Protection Branch, US EPA Region 2, 290 Broadway, New York, NY 10007–1866; (212) 637–3781 (delvicario.mario@epamail. epa.gov).

SUPPLEMENTARY INFORMATION:

I. Regulated Entities

Entities potentially affected by this action include those who might have sought permits to dump dredged material into ocean waters at the Mud Dump Site (MDS) or those who might seek to place Remediation Material at the proposed Historic Area Remediation Site (HARS), under the Marine Protection, Research, and Sanctuaries Act, 33 U.S.C. 1401 *et seq.* (hereinafter referred to as the MPRSA). The rule would primarily be of relevance to entities in the New York-New Jersey Harbor and surrounding area seeking permits from the U.S. Army Corps of Engineers (USACE) for the ocean dumping of dredged material at the Mud Dump Site or those seeking to place Remediation Material at the HARS, as well as the USACE itself. Potentially affected categories and entities seeking to use the Mud Dump Site or the HARS include:

Category	Examples of potentially affected entities
Industry	Ports in NY/NJ Harbor and surrounding areas seeking MPRSA permits for dredged material. Marinas in the NY/NJ Harbor and surrounding areas seeking MPRSA permits for dredged material. Shipyards in the NY/NJ Harbor and surrounding areas seeking MPRSA permits for dredged material. Berth owners in the NY/NJ Harbor and surrounding area seeking MPRSA permits for dredged material.
State/local/ tribal governments.	Local governments owning ports or berths in the NY/NJ Harbor and surrounding area seeking MPRSA permits for dredged material.
Federal	US Army Corps of Engineers for its proposed dredging projects in NY/NJ Harbor and surrounding areas. Federal agencies seeking MPRSA permits for dredged material from NY/NJ Harbor and surrounding areas.

This table is not intended to be exhaustive, but rather provides a guide for readers regarding entities likely to be affected by this action. This table lists the types of entities that EPA is now aware could potentially be affected by this action. Other types of entities not listed in the table could also be affected. To determine whether your organization is affected by this action, you should carefully consider whether your organization is subject to the requirement to obtain an MPRSA permit in accordance with the Purpose and Scope provisions of § 220.1 of Title 40 of the Code of Federal Regulations, and you wish to use the site subject to today's proposal. If you have any questions regarding applicability of this action to a particular entity, please consult the person listed in the preceding **FOR FURTHER INFORMATION CONTACT** section.

Other entities potentially affected by today's proposal would include commercial and recreational fishing interests using New York Bight Apex fishing and shellfish grounds. By providing for remediation of areas adversely impacted by historic disposal activities (see discussion below), today's proposal would be expected to have positive effects on fishery and shellfish resources.

II. Background

Since the 1800s, the New York Bight Apex and surrounding area has been

used for disposal of dredged material and a variety of waste products, including municipal garbage, building materials, sewage sludge, and industrial waste. The New York Bight Apex is defined as the area of approximately 2,000 km² extending along the New Jersey coastline from Sandy Hook south to 40°10′ latitude and east along the Long Island coastline from Rockaway Point to 73°30′ longitude. The New York Bight Apex is a small part of the New York Bight. The New York Bight is an approximately 39,000 km² area extending seaward from Cape May, New Jersey to Montauk Point, New York outward to the edge of the continental shelf. Dredged material placement in the New York Bight Apex began ''officially'' in 1888 at a point 2.5 miles south of Coney Island. At that time, the New York Harbor U.S. Congressional Act of 1888 established that the Supervisor of New York Harbor had the authority to grant permits for ocean disposal. Due to shoaling off Coney Island, the dredged material disposal location was moved in 1900 to a point one-half mile south and eastward of Sandy Hook Lightship. In 1903, the location was moved again, to 1.5 miles east of Scotland Lightship. Dredged material placement continued seaward of this area for the next 70 years.

In 1972, the Congress of the United States enacted the MPRSA to address and control the dumping of materials into ocean waters. Title I of MPRSA authorized the EPA and the USACE to regulate dumping in ocean waters. Since the MPRSA was enacted, and through its subsequent amendments (including the Ocean Dumping Ban Act of 1988, which prohibited ocean dumping of sewage sludge and industrial waste), dumping in the New York Bight has been dramatically reduced through education and implementation actions by EPA, the USACE, the U.S. Coast Guard, and other agencies. In the New York Bight, this has meant permanent closure of the 12-Mile and 106-Mile sewage sludge sites, the Cellar Dirt site, the Acid Waste site, and the Woodburning site.

Regulations implementing the MPRSA are set forth at 40 CFR Parts 220 through 229. With few exceptions, the MPRSA prohibits the transportation of material from the United States for the purpose of ocean dumping except as may be authorized by a permit issued under the MPRSA. The MPRSA divides permitting responsibility between EPA and the USACE. Under Section 102 of the MPRSA, EPA has responsibility for issuing permits for all materials other than dredged material (e.g., fish wastes, burial at sea). Under Section 103 of the MPRSA, the Secretary of the Army has the responsibility for issuing permits for the ocean dumping of dredged material. This permitting authority has been delegated to the USACE. Determinations to issue MPRSA permits for dredged material are subject to EPA review and concurrence. Sediments proposed for ocean disposal within EPA Region 2 and the USACE New York District (NYD) have been separated into 3 categories (see Supplemental EIS), with Category I being allowed for ocean disposal without capping, Category II allowed for ocean disposal with capping, and Category III prohibited from ocean disposal.

Section 102(c) of the MPRSA also provides that EPA may designate recommended times and sites for ocean dumping, and Section 103(b) further provides that the USACE should use such EPA designated sites to the maximum extent feasible. EPA's ocean dumping regulations provide that EPA's designation of an ocean dumping site is accomplished by promulgation of a site designation in 40 CFR part 228 specifying the site. On October 1, 1986, the Administrator delegated the authority to designate/de-designate ocean dumping sites for dredged material to the Regional Administrator of the Region in which the site is located. EPA is proposing the de-designation and termination of the Mud Dump Site and simultaneous HARS designation pursuant to the foregoing authorities and 40 CFR 228.5, 228.6, 228.10, and 228.11. Today's proposal consists of a single rulemaking action that would amend § 228.15(d)(6) by deleting existing language that lists the Mud Dump Site as a designated site and simultaneously replacing it with language designating the HARS. It should be noted that MPRSA site designation does not constitute or imply EPA's approval of actual placement of material at the site. Before placement of the Material for Remediation at the HARS may commence, the USACE must evaluate permit applications according to EPA's Ocean Dumping Regulations.

Interested persons may participate in this proposed rulemaking by submitting written comments to the address given above on or before the close of the public comment period specified in the **DATES** section of this Preamble. Because of the September 1, 1997, deadline for completion of this action (see paragraph below), comments must be timely received in order to enable their consideration.

III. Need for Remediation

As stated in a letter to several New Jersey Congressmen, signed by EPA Administrator Carol Browner, then-Secretary of Transportation Federico F. Peña, and Secretary of the Army Togo D. West, Jr. (July 24, 1996, 3-party letter):

''EPA will immediately begin the administrative process for closure of the Mud Dump Site by September 1, 1997. The proposed closure shall be finalized no later than that date. Post-closure use of the site would be limited, consistent with the management standards in 40 CFR 228.11(c). Simultaneous with closure of the Mud Dump Site, the site and surrounding areas that have been used historically as disposal sites for contaminated material will be redesignated under 40 CFR part 228 as the Historic Area Remediation Site. This designation will include a proposal that the site be managed to reduce impacts at the site to acceptable levels (in accordance with 40 CFR 228.11(c)). The Historic Area Remediation Site will be remediated with uncontaminated dredged material (i.e., dredged material that meets current Category I standards and will not cause significant undesirable effects including through bioaccumulation)'' (referred to hereinafter as ''the Material for Remediation'' or ''Remediation Material''). As also stated in the July 24, 1996, 3-Party Letter: ''The designation of the Historic Area Remediation Site will assure long-term use of Category I dredge material.''

As discussed and documented in the Supplemental environmental impact statement (EIS) accompanying today's proposed action (see section IV of preamble, below), field studies of the New York Bight Apex have found undesirable levels of bioaccumulative contaminants and toxicity in the surface sediments of much of the MDS and in sediments immediately surrounding the MDS. Further, it was found that some of these sediments cause toxicity in amphipod bioassays. Amphipods are small-bodied crustaceans that live in the surface layers of sediment, and are important prey items for many coastal marine organisms. These and other organisms are used by EPA and the USACE to evaluate sediment samples from proposed dredging sites.

While it is impossible to quantify how much of New York Bight Apex contamination is the direct result of past dredged material disposal, other ocean dumping activities (e.g., former sewage sludge disposal at the 12-Mile Site), or other sources (e.g., via Hudson River plume or atmospheric deposition), the presence of these degraded sediments in the Apex is cause for concern. Organisms living in or near these degraded surface sediments in

nearshore waters will be continually exposed to contaminants until the contaminants are buried by natural sedimentation, placement of Remediation Material, or otherwise isolated or removed. Exposed sediments can directly and indirectly impact benthic and pelagic organisms. Impacts to terrestrial organisms (including human beings) are also possible if the contaminants were to undergo trophic transfer.

EPA employed several types of evaluations to determine the extent and location of potential environmental impacts in the vicinity of the MDS and historic dredged material disposal areas. These included the type of amphipod bioassays normally conducted on sediment samples from proposed dredging sites, contaminant-bioaccumulation evaluations of infaunal organisms and sediment from the Study Area (a 30 square nautical mile area within the New York Bight Apex encompassing benthic areas that showed evidence of dredged material disposal (presence of craters and mounds)), and evaluation of the benthic community structure in the potentially impacted areas. The results of these evaluations and the main factors that make remediation necessary are summarized below.

Contaminant Toxicity

Potential toxicity of sediments was evaluated using the same 10-day amphipod (*Ampelisca abdita*) bioassay test used as part of the evaluation of the suitability of sediment for ocean disposal by EPA Region 2 and the USACE New York District (NYD). The data from amphipod bioassays of sediments from 1994 Study Area samples indicated widespread toxic conditions in sediment from areas around the MDS. If these surface sediments from the Study Area were from a proposed Region 2/NYD dredging project site, the sediments would have been categorized as Category III and found to not meet the limiting permissible concentration (LPC) in EPA's Ocean Dumping Regulations (40 CFR 227.27), and thus would not be permitted for disposal at the MDS.

Contaminant Bioaccumulation/Trophic Transfer

Contaminant bioaccumulation was evaluated by analyzing the tissues of infaunal worms collected from the Study Area sediments. Infaunal organism bioaccumulation of sediment-associated contaminants can, if accumulated to high enough levels, result in both acute and chronic impacts and eventually transform benthic community structure. Such changes can affect the food source of demersal predators. When demersal predators feed on infauna with contaminated tissues, the contaminants can be transferred to and potentially accumulate in the predator. These contaminants can then potentially be consumed by humans. EPA's evaluation of contaminant bioaccumulation in the Study Area was similar to the national testing manual's (Green Book) Tier IV ''steady-state'' evaluations, which are used in determining compliance with the ocean dumping criteria. The results showed that there were areas in the vicinity of the MDS where these benthic worms were accumulating undesirable levels of contaminants from the sediments.

Contaminants in Sediments

Contaminant concentrations in sediments in the vicinity of the MDS were compared to National Oceanic and Atmospheric Administration (NOAA) ER–L (Effects Range-Low) and ER–M (Effects Range-Median) values which have been derived from a broad range of biological and chemical data collected synoptically from field and laboratory experiments. Although ER–L/ER–M values are not appropriate for regulatory decision making, they are useful in sediment evaluations when considered concurrently with other data. In general, the comparisons of ER–L/ER–M values to contaminant levels in sediments from parts of the Study Area indicated that, based on contaminant levels in the sediment, negative biological effects could be possible at many stations. This conclusion is corroborated by the results of the toxicity and contaminant bioaccumulation tests described above.

Contaminant Levels in Area Lobsters

NOAA tissue data from lobsters that were harvested in the New York Bight Apex in 1994 revealed that PCB and 2,3,7,8–TCDD (dioxin) concentrations in the hepatic tissue (tomalley) of the lobsters were above U.S. Food and Drug Administration consumption guidelines. Other contaminants were also present in the hepatopancreas and other tissues, but the concentrations of these contaminants were within consumption guidelines.

It must be kept in mind that the lobsters analyzed in the NOAA study were harvested from wild stocks in the Apex, whose populations migrate seasonally through the region, including perhaps the SEIS Study Area. Contamination of these animals cannot be definitively linked to specific areas of dredged material disposal, to other past dumping activities, or to other ongoing pollution sources. Nor does the study data indicate that human consumption of lobster muscle tissue (meat) presents health risks. However, the lobster study data do show that contaminants are being accumulated, and that concern about potential human-health risks is warranted. This contaminant data set complements other evidence of benthic contamination in the Bight Apex region.

Solutions to Sediment Degradation in the Study Area

Today's proposal to terminate and de-designate the Mud Dump Site, and simultaneously redesignate the area of that site and surrounding degraded areas as the Historic Area Remediation Site is amply supported by the presence of toxic effects (a Category III sediment characteristic), dioxin bioaccumulation exceeding Category I levels in worm tissue (a Category II sediment characteristic), ER–L/ER–M exceedances in some Study Area sediments, as well as TCDD/PCB contamination in area lobster stocks. Individual elements of the aforementioned data do not prove that sediments within the Study Area are imminent hazards to the New York Bight Apex ecosystem, living resources, or human health. However, the collective evidence presents cause for concern, justifies the conclusion of the July 24, 1996, 3-Party Letter that a need for remediation exists, that the site is Impact Category I (*see,* 40 CFR 228.10), and that the site should be managed to reduce impacts to acceptable levels (*see,* 40 CFR 228.11(c)). Further information on the conditions in the Study Area and the surveys performed may be found in the Supplemental Environmental Impact Statement described immediately below.

IV. EIS Development

Section 102(c) of the National Environmental Policy Act of 1969, Section 4321 *et seq.* (NEPA) requires that Federal agencies prepare an environmental impact statement (EIS) on proposals for major Federal actions significantly affecting the quality of the human environment. The object of NEPA is to build into the Agency decision making process careful consideration of all environmental aspects of proposed actions. Although EPA activities have been determined to be ''functionally equivalent'' with NEPA, EPA has voluntarily undertaken to prepare an EIS when designating ocean dumping sites. *See,* 39 FR 16186 (May 7, 1974).

In August 1982, EPA published a final EIS entitled, ''Environmental Impact Statement for the New York Dredged

Material Disposal Site Designation.'' The EIS assessed the environmental impacts of establishing an ocean disposal site for 100 million cubic yards (mcy) of dredged materials generated within the Port of New York and New Jersey. After completion of the environmental studies and publication of the EIS, EPA designated the Mud Dump Site as an Impact Category I disposal site on May 4, 1984 at 49 FR 19012 (*see,* 40 CFR 228.10(c)). The resulting rule specifying the Mud Dump Site established a capacity of 100 mcy (*see,* 40 CFR 228.15(d)(6)). Approximately 68 mcy of dredged material has been disposed of at the Mud Dump Site since that designation; the remaining capacity of the Mud Dump Site is affected by a variety of factors, including disposal strategies and mound height restrictions for dredged material. Consistent with the need for remediation and the above-quoted provision of the July 24, 1996, 3-Party letter, on September 11, 1996, EPA announced the following actions: (1) Modification of the scope of the existing supplemental environmental impact statement (EIS) by eliminating the proposal to expand the Mud Dump Site for Category II dredged material disposal; and (2) implementation of the July 24, 1996, 3-Party letter by closing the Mud Dump Site by September 1, 1997, and simultaneously designating the HARS for the purpose of remediation. Accordingly, EPA has prepared a Supplemental EIS entitled, ''Supplement to the Environmental Impact Statement on the New York Dredged Material Disposal Site Designation for the Designation of the Historic Area Remediation Site (HARS) in the New York Bight Apex.'' The document addresses the environmental considerations relevant to the HARS, and identifies the Priority Remediation Area (PRA) within the HARS. Anyone desiring a copy of the Supplemental EIS may obtain one from the address given above.

The action discussed in the Supplemental EIS is the simultaneous termination/de-designation of the Mud Dump Site and designation of the HARS. The appropriateness of placing specific material at a designated site is determined on a case-by-case basis as part of the process of issuing permits under the MPRSA. The Category II capacity of the existing Mud Dump Site will be reached by September 1, 1997. The basis for this limit is explained in the Mud Dump Site Management and Monitoring Plan (SMMP), which can be obtained by contacting Douglas A. Pabst, EPA Region 2, at (212) 637–3797 (E-mail pabst.douglas@epamail.epa.gov) or Brian May, USACE-New York District (NYD), at (212) 264–1853 (E-mail: Brian.May@NAN01.USACE.Army.Mil).

The following alternatives were evaluated in detail in the Supplemental EIS:

1. No Action

Under this alternative, there would be no designation of a HARS in the New York Bight Apex for the placement of Remediation Material. With the no action alternative, Category II dredged material capacity will be reached by September 1, 1997; no Category II disposal will be allowed at the Mud Dump Site after capacity is reached. The disposal of Category I dredged materials would continue until the capacity of the Mud Dump Site is reached (i.e., 31 mcy of Category I). There would be no change to the size or management of the present Mud Dump Site. EPA has not selected the no action alternative because this alternative does not allow for any remediation of the degraded sediments outside the Mud Dump Site.

2. Closure of the Mud Dump Site With No Designation of the HARS

Under this alternative, the Mud Dump Site would be closed/de-designated by September 1, 1997, and there would be no designation of the HARS. Similar to the no action alternative, this option does not allow for any remediation of degraded sediments inside or outside of the Mud Dump Site, and thus was not selected.

3. Remediation (Preferred Alternative)

Under the remediation alternative (which is the subject of today's proposed rule), there would be simultaneous closure/de-designation of the Mud Dump Site and designation of the HARS by September 1, 1997. The proposed HARS, which will include the 2.2 square nautical mile area of the Mud Dump Site, would be an approximately 15.7 square nautical mile area located approximately 3.5 nautical miles east of Highlands, New Jersey and 7.7 nautical miles south of Rockaway, New York. The Mud Dump Site is located approximately 5.3 nautical miles east of Highlands, New Jersey and 9.6 nautical miles south of Rockaway, New York. The proposed HARS will include the following three areas (See Figure 1):

BILLING CODE 6560–50–P

HISTORIC AREA REMEDIATION SITE

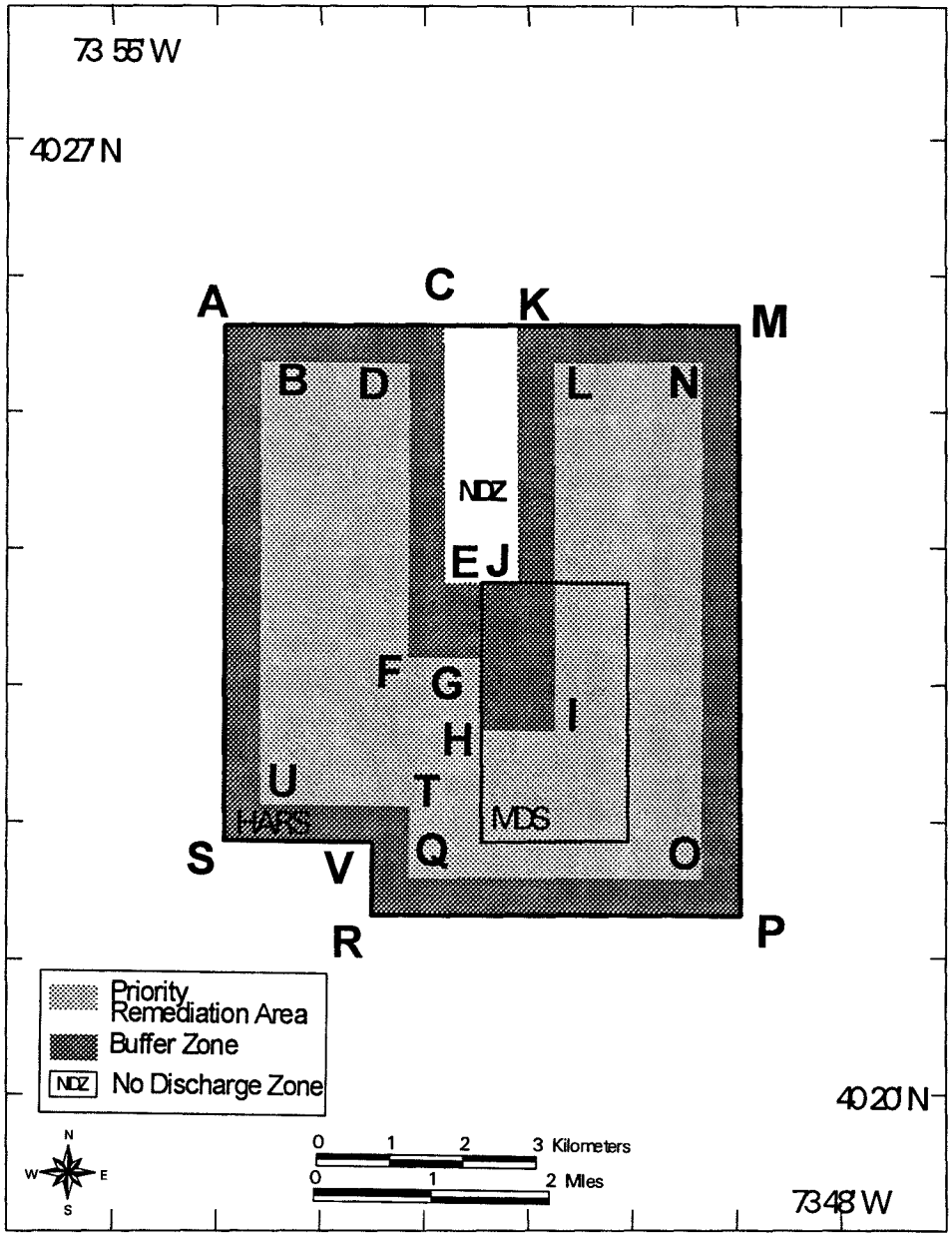

BILLING CODE 6560–50–C

Priority Remediation Area (PRA): A 9.0 square nautical mile area to be remediated with at least 1 meter of Remediation Material. The PRA encompasses the area of degraded sediments as described in greater detail in the Supplemental EIS.

Buffer Zone: An approximately 5.7 square nautical mile area (0.27 nautical mile wide band around the PRA) in which no placement of the Material for Remediation will be allowed, but may receive Material for Remediation that incidentally spreads out of the PRA.

No Discharge Zone: An approximately 1.0 square nautical mile area in which no placement or incidental spread of Material for Remediation is allowed.

Remediation would be accomplished by covering all areas within the PRA, prioritized by the degree of degradation, with at least a 1 meter cap (minimum required cap thickness) of the Material for Remediation.

The Supplemental EIS selects remediation as the preferred alternative following a comparison of the four proposed project alternatives. The remediation alternative would reduce the toxicity of area sediments to sensitive marine organisms and would decrease the contaminant bioavailability and possible sublethal effects to fish and shellfish resources, thereby reducing potential trophic transfer of contaminants to piscivorous marine birds, mammals and human beings. As stated in the July 24, 1996, 3-Party letter: ''Simultaneous with closure of the MDS, the site and surrounding areas that have been used historically as disposal sites for contaminated material will be redesignated under 40 CFR part 228 as the Historic Area Remediation Site. This designation will include a proposal that the site be managed to reduce impacts at the site to acceptable levels (in accordance with 40 CFR 228.11(c)).'' As further stated in the July 24, 1996, 3-Party Letter: ''The designation of the Historic Area Remediation Site will assure long-term use of category I dredge material.'' A draft SMMP for the HARS has been prepared and may be obtained by contacting Douglas A. Pabst, EPA Region 2, at (212) 637–3797 (E-mail: pabst.douglas@epamail.epa.gov) or Brian May, USACE-New York District (NYD), at (212) 264–1853 (E-mail: Brian.May@NAN01.USACE.Army.Mil).

4. Restoration

Under the restoration alternative, there would be the simultaneous closure/de-designation of the Mud Dump Site and designation of the HARS by September 1, 1997. The HARS would include the present area of the Mud Dump Site and areas outside the Mud Dump Site found to be degraded by historical dredged material disposal. The restoration work would be conducted by covering degraded sediment areas with at least a one meter cover of sandy Material for Remediation (0 to 10% fines). Restoration work would be prioritized by the degree of degradation—that is, areas exhibiting the greatest degradation would be restored first. EPA did not select this alternative since it would have contributed to a loss of mud, and muddy sand habitats, with possible negative effects to living resources (e.g., lobster and winter flounder). Further, there is limited availability of sandy Material for Remediation from New York-New Jersey Harbor and surrounding areas, and no dedicated funding for obtaining suitable material from other sources (e.g., inlet projects or mining sites). This could make restoration infeasible or result in a much longer restoration period than Alternative 3, with continued exposure of degraded sediments to the biotic zone of the New York Bight. In addition, one of the objectives of the July 24, 1996, 3-Party letter is that the designation of the Historic Area Remediation Site assures long-term use of Category I dredged material.

V. Proposed Action

Today's proposal would implement Alternative 3 of the Supplemental EIS. The proposed HARS (which includes the 2.2 square nautical mile Mud Dump Site) is a 15.7 square nautical mile area located approximately 3.5 nautical miles east of Highlands, New Jersey, and 7.7 nautical miles south of Rockaway, New York, and bounded by the coordinates shown in Table 1.

In order to reduce adverse effects that have occurred within the HARS (*see,* 40 CFR 228.11(c)), use of the site would be limited to the placement of Remediation Material. Remediation Material, as provided in the July 24, 1996, 3-party letter, is ''uncontaminated dredged material (i.e., dredged material that meets current Category I standards and will not cause significant undesirable effects, including through bioaccumulation)''. Based upon evaluation for environmental impact under 40 CFR part 227, subpart B, material to be used for remediation must satisfy the criteria of 40 CFR 227.6 and 227.27 and not indicate a potential for short term (acute) impacts or long term (chronic) impacts. Consistent with achieving the objective of remediating the HARS to acceptable levels of impact, material to be used for remediation will possess characteristics that demonstrably contribute to the improvement of conditions within the area in which they are to be placed so as to enable development of sustainable and diverse communities of healthy benthic marine life.

If at any time remediation operations at the site cause significant adverse environmental impacts, EPA will place such additional limitations on site use as are necessary to reduce the impacts to acceptable levels, particularly taking into account the following factors: movement of materials into estuaries or marine sanctuaries, or onto oceanfront beaches, or shorelines; movement of materials toward productive fishery or shell fishery areas; absence from the HARS of pollution-sensitive biota characteristic of the general area; progressive, non-seasonal changes in water quality or sediment composition at the HARS, when these changes are attributable to material placed at the HARS; progressive, non-seasonal changes in composition or numbers of pelagic, demersal, or benthic biota at or near the HARS, when these changes are attributable to the material placed at the HARS; and accumulation of constituents from the material in marine biota near the HARS. *See,* 40 CFR 228.10.

VI. Site Designation Criteria

Under 40 CFR 228.5, five general criteria are used in the selection and approval of sites under section 102 of the MPRSA for continuing use. Pursuant to § 228.5(a), sites are selected so as to minimize interference with other marine activities, particularly avoiding areas of existing fisheries or shell fisheries, and areas of heavy navigational use. For additional information on § 228.5(a) see sections 3.5, 4.0, 4.1, 4.2, 4.2.1, 4.2.2, and 4.2.4 of the Supplemental EIS. Pursuant to § 228.5(b), sites are situated such that temporary water quality perturbations caused by site operations would be expected to be reduced to normal ambient levels before reaching any beach shoreline, sanctuary or geographically limited fishery area. For additional information on § 228.5(b) see Sections 3.2.4, 4.2.2, 4.2.3, and 5.0 of the Supplemental EIS. Pursuant to § 228.5(c), if site designation studies show that any interim site does not meet the site selection criteria, use of such site shall be terminated as soon as an alternate site can be designated. Pursuant to § 228.5(d), site size is limited in order to localize for identification and control any immediate adverse impacts, and to facilitate effective monitoring for long-range effects. For additional information

on § 228.5(d) see Section 5.0 of the Supplemental EIS. Pursuant to § 228.5(e), EPA will, wherever feasible, designate sites beyond the edge of the continental shelf or sites that have been historically used. For additional information on § 228.5(e) see Sections 3.2.1 and 3.2.2 of the Supplemental EIS.

As described in Chapter 4 of the Supplemental EIS, today's proposal complies with the general criteria of § 228.5. Specifically, the HARS, which will be remediated to improve its current condition, is not in a geographically limited fishery area, is not in a major navigation area and otherwise has no geographically limited resource values that are not abundant in other parts of this coastal region. The Material for Remediation placed at the site will not reach any significant areas such as a marine sanctuary, beach, or other important natural resource area (i.e., the buffer zone ensures that transport beyond the HARS boundaries during initial mixing is avoided). Neither the HARS nor the existing Mud Dump Site are interim sites, and the HARS has an appropriately limited size that will allow for effective monitoring and localize impacts. Although the site is not located off the Continental Shelf, it is located in an area previously affected by historical dredged material disposal. Use of a site off the Continental Shelf is not feasible because a major underlying purpose of the HARS designation is to provide for remediation of such historically used areas, and these areas are located on the continental shelf.

Section 228.6 of the Ocean Dumping Regulations also lists eleven specific factors used in evaluating a proposed site. These 11 specific criteria were also considered in developing today's proposed rule, as described below, and documented in the Supplemental EIS.

1. *Geographical position, depth of water, bottom topography and distance from coast (40 CFR 228.6(a)(1):* The HARS (which includes the 2.2 square nautical area of the mile Mud Dump Site) is a 15.7 square nautical mile area located approximately 3.5 nautical miles east of Highlands, New Jersey and 7.7 nautical miles south of Rockaway, New York, bounded by the following coordinates:

TABLE 1

Point	Latitude DMS	Longitude DMS	Latitude DDM	Longitude DDM
A	40°25′39″ N	73°53′55″ W	40°25.65′ N	73°53.92′ W
M	40°25′39″ N	73°48′58″ W	40°25.65′ N	73°48.97′ W
P	40°21′19″ N	73°48′57″ W	40°21.32′ N	73°48.95′ W
R	40°21′19″ N	73°52′30″ W	40°21.32′ N	73°52.50′ W
S	40°21′52″ N	73°53′55″ W	40°21.87′ N	73°53.92′ W
V	40°21′52″ N	73°52′30″ W	40°21.87′ N	73°52.50′ W

DMS = Degrees, Minutes, Seconds
DDM = Degrees, Decimal Minutes

The proposed HARS includes the following 3 areas:

Priority Remediation Area (PRA): 9.0 square nautical mile area to be remediated with at least 1 meter of Remediation Material, bounded by the following coordinates:

TABLE 2

Point	Latitude DMS	Longitude DMS	Latitude DDM	Longitude DDM
B	40°25′23″ N	73°53′34″ W	40°25.38′ N	73°53.57′ W
D	40°25′22″ N	73°52′08″ W	40°25.37′ N	73°52.13′ W
F	40°23′13″ N	73°52′09″ W	40°23.22′ N	73°52.15′ W
G	40°23′13″ N	73°51′28″ W	40°23.22′ N	73°51.47′ W
H	40°22′41″ N	73°51′28″ W	40°22.68′ N	73°51.47′ W
I	40°22′41″ N	73°50′43″ W	40°22.68′ N	73°50.72′ W
L	40°25′22″ N	73°50′44″ W	40°25.37′ N	73°50.73′ W
N	40°25′22″ N	73°49′19″ W	40°25.37′ N	73°49.32′ W
O	40°21′35″ N	73°49′19″ W	40°21.58′ N	73°49.32′ W
Q	40°21′36″ N	73°52′08″ W	40°21.60′ N	73°52.13′ W
T	40°22′08″ N	73°52′08″ W	40°22.13′ N	73°52.13′ W
U	40°22′08″ N	73°53′34″ W	40°22.13′ N	73°53.57′ W

DMS = Degrees, Minutes, Seconds
DDM = Degrees, Decimal Minutes

Water depths within this area range from 40 feet (12 meters) to 138 feet (42 meters). The bottom topography is characterized by mounds from previous disposal activities that gradually slope downward toward the southeast near the Hudson Shelf Valley.

Buffer Zone: an approximately 5.7 square nautical mile area (0.27 nautical mile wide band around the PRA) in which no placement of the Material for Remediation will be allowed, but which may receive Remediation Material that incidentally spreads out of the PRA, bounded by the following coordinates:

TABLE 3

Point	Latitude DMS	Longitude DMS	Latitude DDM	Longitude DDM
A	40°25′39″ N	73°53′55″ W	40°25.65′ N	73°53.92′ W

TABLE 3—Continued

Point	Latitude DMS	Longitude DMS	Latitude DDM	Longitude DDM
B	40°25′23″ N	73°53′34″ W	40°25.38′ N	73°53.57′ W
C	40°25′39″ N	73°51′48″ W	40°25.65′ N	73°51.80′ W
D	40°25′22″ N	73°52′08″ W	40°25.37′ N	73°52.13′ W
E	40°23′48″ N	73°51′48″ W	40°23.80′ N	73°51.80′ W
F	40°23′13″ N	73°52′09″ W	40°23.22′ N	73°52.15′ W
G	40°23′13″ N	73°51′28″ W	40°23.22′ N	73°51.47′ W
H	40°22′41″ N	73°51′28″ W	40°22.68′ N	73°51.47′ W
I	40°22′41″ N	73°50′43″ W	40°22.68′ N	73°50.72′ W
J	40°23′48″ N	73°51′06″ W	40°23.80′ N	73°51.10′ W
K	40°25′39″ N	73°51′06″ W	40°25.65′ N	73°51.10′ W
L	40°25′22″ N	73°50′44″ W	40°25.37′ N	73°50.73′ W
M	40°25′39″ N	73°48′58″ W	40°25.65′ N	73°48.97′ W
N	40°25′22″ N	73°49′19″ W	40°25.37′ N	73°49.32′ W
O	40°21′35″ N	73°49′19″ W	40°21.58′ N	73°49.32′ W
P	40°21′19″ N	73°48′57″ W	40°21.32′ N	73°48.95′ W
Q	40°21′36″ N	73°52′08″ W	40°21.60′ N	73°52.13′ W
R	40°21′19″ N	73°52′30″ W	40°21.32′ N	73°52.50′ W
S	40°21′52″ N	73°53′55″ W	40°21.87′ N	73°53.92′ W
T	40°22′08″ N	73°52′08″ W	40°22.13′ N	73°52.13′ W
U	40°22′08″ N	73°53′34″ W	40°22.13′ N	73°53.57′ W
V	40°21′52″ N	73°52′30″ W	40°21.87′ N	73°52.50′ W

DMS = Degrees, Minutes, Seconds
DDM = Degrees, Decimal Minutes

No Discharge Zone: an approximately 1.0 square nautical mile area in which no placement or incidental spread of the Material for Remediation is allowed, bounded by the following coordinates:

TABLE 4

Point	Latitude DMS	Longitude DMS	Latitude DDM	Longitude DDM
C	40°25′39″ N	73°51′48″ W	40°25.65′ N	73°51.80′ W
E	40° 23′ 48″ N	73° 51′ 48″ W	40° 23.80′ N	73° 51.80′ W
J	40° 23′ 48″ N	73° 51′ 06″ W	40° 23.80′ N	73° 51.10′ W
K	40° 25′ 39″ N	73° 51′ 06″ W	40° 25.65′ N	73° 51.10′ W

DMS = Degrees, Minutes, Seconds
DDM = Degrees, Decimal Minutes

For additional information see Sections 3.1, 3.2.2, 3.3.1, 3.3.4, 4.1, 4.2, 4.2.9 of the Supplemental EIS.

2. *Location in relation to breeding, spawning, nursery, feeding, or passage areas of living resources in adult or juvenile phases* (40 CFR 228.6(a)(2)): There are substantial living marine resources that breed, spawn, feed and transit the proposed HARS in both juvenile and adult phases. These biological resources are utilized by commercial and recreational fishermen. Placement of the Material for Remediation at the HARS is intended to help improve the sediment conditions in the area, and thus should be beneficial to marine life.

Approximately 30 species of whales, seals, and dolphins are observed in the mid-Atlantic area in the course of their migration. Three endangered and two threatened species of sea turtles are found in the mid-Atlantic. Two of the five, the Kemp's ridley and loggerhead turtle, are known to occur near shore. Fin and humpback whales occur in both near shore and offshore waters. Several species of seabirds breed in the middle Atlantic states, with New Jersey and Long Island harboring the largest nesting areas. Of particular concern are the least tern, roseate tern, and the black skimmer, as the present populations of these species are greatly reduced over historic population sizes. The HARS lies within the Atlantic Flyway through which over three million migratory waterfowl travel annually. Although these activities occur in the vicinity of the proposed HARS, no feature of the life history of valuable organisms is known to be unique to the area.

With respect to endangered and threatened species, informal consultation was conducted with the U.S. Fish and Wildlife Service (USFWS) and the National Marine Fisheries Service (NMFS). The USFWS concurred with EPA's determination that species under its jurisdiction would not likely be adversely affected by the proposed action. EPA prepared a Biological Assessment of the proposed action on four species under NMFS jurisdiction: Kemp's ridley sea turtle, loggerhead sea turtle, humpback whale, and the fin whale. The Biological Assessment, which concludes that the proposed action is not likely to affect these four species, is available upon request by contacting the person listed in the **FOR FURTHER INFORMATION CONTACT** section. For additional information see Sections 3.4, 3.5, 4.2.2, 4.3.1.4, 4.3.2.4, 4.3.3.4 of the Supplemental EIS.

3. *Location in relation to beaches and other amenity areas* (40 CFR 228.6(a)(3)): There are heavily used beaches, public shorelines and recreational facilities on the southern coast of Long Island, New York, and the Atlantic shore of New Jersey. The HARS encompasses all benthic areas that EPA has determined are appropriate for remediation and show evidence of dredged material disposal and/or historical ocean dumping activities as found within the 30 square nautical mile Study Area evaluated in the SEIS. Portions of the ocean front beaches in

New Jersey will be as close as 3.5 nautical miles west of the HARS; amenity areas in Long Island, New York, will be 7.4 nautical miles from the HARS. Given the rapid dissipation characteristics of dredge plumes (i.e., plume dilution after two hours, based on total suspended solids, ranged from approximately 64,000:1 to 557,000:1) and that virtually all released materials settle to the bottom near the release point, the Material for Remediation placed in the HARS would not adversely affect beaches or similar amenities. For additional information see Sections 3.1, 4.2.1, 4.2.3 of the Supplemental EIS.

4. *Types and quantities of wastes proposed to be disposed of , and proposed methods of release, including methods of packing the waste, if any* (40 CFR 228.6(a)(4)): Approximately 41 mcy of the Material for Remediation will be placed at the HARS. This estimate is based upon the placement of a 1 meter cap (minimum required cap thickness) of the Material for Remediation on sediments within the PRA. This volume is an estimate; past capping experience suggests that the actual remediation volume will be higher due to settling and mounding of the material. The Material for Remediation will be generated through the maintenance and development of navigation channels and berthing areas in the Port of New York and New Jersey and surrounding areas, and could also be generated as a result of non-navigational dredging. All of the materials would be transported to the HARS by dump scow or hopper dredge. The Material for Remediation placed in the HARS would not be containerized or packaged. For additional information see Sections 3.2.3, 3.2.4, and 5.0 of the Supplemental EIS.

5. *Feasibility of surveillance and monitoring* (40 CFR 228.6(a)(5)): Surveillance of the site can be accomplished by boat, helicopter, disposal inspectors aboard barges, scows, and tugboats, or through radar or satellite. This effort would be conducted jointly by the EPA—USACE New York District , and the U.S. Coast Guard. The EPA has developed a draft HARS SMMP which covers post-closure activities at the Mud Dump Site and remediation activities within the HARS upon its designation (see below for information on obtaining the HARS SMMP). The HARS will be managed to reduce impacts at the site to acceptable levels (in accordance with 40 CFR 228.11 (c)). For additional information see Sections 3.2.4, 4.3.1.7, 4.3.2.7, 4.3.3.7, 4.3.4.7, and 5.0 of the Supplemental EIS.

6. *Dispersal, horizontal transport and vertical mixing characteristics of the area, including prevailing current direction and velocity, if any* (40 CFR 228.6(a)(6)): Prevailing long-term currents in the New York Bight, which includes the area of the HARS, are to the southwest at mean speeds of approximately 3.7 cm/second, with an occasional clockwise eddy in the Bight Apex. Surface waves are generally less than 2 meters in height except during major storms which occur most frequently in the fall and winter seasons. Wave-induced near bottom currents are greater than 20 cm/second only when surface wave heights exceed 3 meters, wave periods are in excess of 10 seconds, and storm centers are to the east or southeast. These wave conditions are encountered less than 3% of the time in the fall and winter, and less than 1% of the time in the spring and summer. Near bottom oscillatory currents at the HARS are relatively weak with maximum speeds on the order of 10 cm/s. Mean currents are also weak, with direction that is dependent upon location, water depth, and bottom topography.

Short term dispersion in the water column is a function of tidal forces and currents at the time of placement. Deposited Remediation Material sediments are relatively stable under non-storm conditions. Resuspension and dispersion after deposition is primarily caused by major storm activity and the most intense storms can resuspend and transport sandy sediments deposited in less than 20 m of water. Any potential for transport of the Material for Remediation to beaches and amenities is negligible. For additional information see Sections 3.3.3, 3.3.4, 3.3.5, 3.3.6, 3.3.7, 3.3.8, and 4.2.3 of the Supplemental EIS.

7. *Existence and effects of current and previous discharges and dumping in the area (including cumulative effects)* (40 CFR 228.6(a)(7)): The NY Bight Apex has been historically utilized for ocean disposal of dredged material and a variety of waste products since the 1800's (e.g., building materials, sewage sludge, industrial waste). Ocean disposal of garbage was eliminated in 1934; other industrial waste product disposal practices ended as a result of the passage of the Ocean Dumping Ban Act (sewage sludge disposal ended in 1992). The size of the PRA within the HARS is 9.0 square nautical miles. For additional information see Sections 3.2.1, 3.2.2, 3.2.3, 4.3.1.1, 4.3.2.1, and 4.3.3.1 of the Supplemental EIS.

As previously discussed in today's preamble and further explained in Chapters 1 and 3 of the Supplemental EIS accompanying today's proposal, field surveys have identified areas of sediments exhibiting unacceptable toxicity to amphipods and elevated levels of bioaccumulative contaminants within the MDS and surrounding areas. Although precise quantification of the sources of such contamination is not possible (with potential sources including historical dredged material disposal, former 12-Mile Site sewage sludge dumping, the Hudson River Plume, and atmospheric deposition), the presence of degraded sediments exhibiting unacceptable toxicity and/or unacceptable bioaccumulation is cause for concern. Bathymetric and side scan data show evidence of dredged material disposal mounds in the Supplemental EIS study area. The available information, as documented in the accompanying Supplemental EIS, supports both the closure of the MDS and designation and remediation of the HARS.

8. *Interference with shipping, fishing, recreation, mineral extraction, desalination, fish and shellfish culture, areas of special scientific importance and other legitimate uses of the ocean* (40 CFR 228.6(a)(8)): The site is located in the entrance to New York Harbor. It is within the precautionary zone established by the U.S. Coast Guard for commercial and recreational ship traffic. Discussions with local harbor pilots indicate that the proposed activities at the HARS will not interfere with commercial navigation activity. Neither desalination nor fish or shellfish culture occurs near the site. This action is intended to help improve sediment conditions in the area, and thus should be beneficial to fishing. Sand mining in the area of the HARS has been precluded by a 1996 statement of policy from the Minerals Management Service (MMS). In a related matter, the MMS has stated that areas of low petroleum potential in the vicinity of the site are under moratorium for oil and gas exploration. The HARS is not a scientifically important area. For additional information see Sections 3.5, 4.2.1, 4.2.2, 4.2.4, 4.2.5, 4.2.5.1, 4.2.5.2, 4.2.6, and 4.2.8 of the Supplemental EIS.

9. *The existing water quality and ecology of the site as determined by available data or by trend assessment or baseline surveys* (40 CFR 228.6(a)(9)): From 1994 to 1996, EPA Region 2 and the USACE NYD conducted a variety of oceanographic surveys within an approximately 30 square nautical mile study area (including the 15.7 square nautical mile HARS). Water quality in and near the HARS meets applicable Federal marine water quality criteria; the water quality can be affected by Hudson River outflow/plume and

natural seasonal cycles. With respect to site ecology, demersal and pelagic fish are abundant in the site. Two benthic infaunal communities (i.e., sandy and fine grain) occur in the site. Abundance of both benthic communities is high, diversity is moderate. Neither of the benthic communities is detectably impaired by contaminants in the sediments. Studies conducted by EPA, however, indicate that when sediments from the HARS area are removed and brought back to the laboratory for subsequent toxicity testing using standard 10-day amphipod (ampelisca abdita) acute toxicity test procedures, sediment toxicity is observed in sediments from many areas of the HARS. These studies revealed levels of toxicity within the HARS that would fail the ocean disposal criteria and qualify as Category III dredged material. Analyses conducted on worm tissue collected from the HARS revealed levels of dioxin in excess of Category I levels but below Category III levels. For additional information see Section 3.3.10, 3.4, and 3.5.2 of the Supplemental EIS.

10. *Potential for the development or recruitment of nuisance species in the site* (40 CFR 228.6(a)(10)): Based on the available evidence, including monitoring studies of the New York Bight Apex and the Mud Dump Site, the Material for Remediation is not a potential source for the development or recruitment of nuisance species in the HARS. Monitoring results and available data indicate that placement of dredged material at the Mud Dump Site has not extended the range of undesirable living organisms or pathogens or degraded uninfected areas, or introduced viable non-indigenous species into the area. For additional information see sections 3.3, 3.4.1.1, 4.3.2.4, and 4.3.3.4 of the Supplemental EIS.

11. *Existence at or in close proximity to the site of any significant natural or cultural feature of historical importance* (40 CFR 228.6(a)(11)): The site is located approximately 7.7 nautical miles from the Gateway National Recreational Areas in Rockaway, NY, and 3.5 nautical miles from Sandy Hook, NJ. It is also near a number of important features of historic importance, including the Marconi Twin Lights (3.5 nautical miles away). Dredged material placed at the nearby Mud Dump Site has not been found to affect state or national parks, beaches, or features of historical importance. A cultural resources survey of the study area was conducted as part of the development of the Supplemental EIS; 15 shipwrecks were located within the study area. EPA has determined to avoid (i.e., no placement within 500 meters of a wreck) four of the vessels that are located in the PRA that have potential eligibility to the National Register of Historic Places. Avoidance ensures that the wrecks are available for further investigation and determination for eligibility for nomination should any future federal action be planned in the area. For additional information see Sections 3.5.7, 4.3.1.5, 4.3.2.5, 4.3.3.5, and 4.3.4.5 of the Supplemental EIS.

In conclusion, the available information, as documented in the accompanying SEIS, supports both the closure of the MDS and designation and remediation of the HARS.

VII. Summary

Today's proposal would de-designate the Mud Dump Site and simultaneously redesignate the area of that site and surrounding degraded areas as the Historic Area Remediation Site. The proposed HARS is compatible with the general criteria and specific factors used for site evaluation. EPA thus is proposing the designation of the HARS as an EPA approved site under authorities contained in MPRSA Section 102(c). Management of this site is delegated to the Regional Administrator of EPA Region 2. Today's proposal would revise § 228.15(d)(6) to de-designate the Mud Dump Site and simultaneously designate the HARS.

The proposed action would provide for remediation of the area containing sediments exhibiting Category II and III characteristics. These areas will be remediated with at least a 1 meter cap of Remediation Material in order to isolate the areas from the marine environment, thus assuring the potential effects of historical dumping in the HARS are reduced to acceptable levels.

VIII. Compliance With Other Acts and Orders

A. Executive Order 12866

Under Executive Order 12866 (58 FR 51735, October 4, 1993), the Agency must determine whether the regulatory action is ''significant'' and therefore subject to OMB review and the requirements of the Executive Order. The Order defines ''significant regulatory action'' as one that is likely to result in a rule that may:

(1) Have an annual effect on the economy of $100 million or more or adversely affect in a material way the economy, a sector of the economy, productivity, competition, jobs, the environment, public health or safety, or State, local or tribal governments or communities;

(2) Create a serious inconsistency or otherwise interfere with an action taken or planned by another agency;

(3) Materially alter the budgetary impact of entitlement, grants, user fees, or loan programs or the rights and obligations of recipients thereof; or

(4) Raise novel legal or policy issues arising out of legal mandates, the President's priorities, or the principles set forth in the Executive Order.''

Today's proposed action, which would simultaneously de-designate the Mud Dump Site and designate the HARS, is not a significant regulatory action. The de-designation of the Mud Dump Site would not affect the disposal of Category II material, because the Mud Dump Site will reach capacity for Category II materials in the next few months (before September 1, 1997) due to already existing technical limitations on the height of the mound. This would occur regardless of whether the Agency goes forward with today's proposed action. With regard to Category I material, the proposed HARS would continue to provide an EPA-designated site for the placement of ''uncontaminated dredged material (i.e., dredged material that meets current Category I standards and will not cause significant undesirable effects including through bioaccumulation)'' (July 24,1996, 3-party letter). It thus has been determined that this rule is not a ''significant regulatory action'' under the terms of the Executive Order 12866 and is therefore not subject to OMB review.

B. Regulatory Flexibility Act

The Regulatory Flexibility Act (RFA) provides that, whenever an agency proposes a rule subject to notice and comment requirements under 5 U.S.C. 553, it must prepare an initial regulatory flexibility analysis unless the head of the agency certifies that the rule will not have a significant economic impact on a substantial number of small entities (5 U.S.C. 604 and 605). Today's proposal is not likely to impact a substantial number of small entities. Even if small pier and berth owners and small marinas might be economically affected, such economic effects would be slight because although today's proposal would terminate the Mud Dump Site, it also would simultaneously designate an area (the HARS) for the placement of Material for Remediation. As provided in the July 24, 1996, 3-Party letter, such material is ''* * * uncontaminated dredged material (i.e., dredged material that meets current Category I standards and will not cause significant undesirable effects, including through bioaccumulation).'' Thus, today's

proposal will help assure the ''* * * long-term use of category 1 dredge material.'' from NY/NJ Harbor and surrounding areas. With respect to Category II dredged material, the capacity of the Mud Dump Site to receive Category II material will be used up by September 1, 1997 as a result of pre-existing constraints, even in the absence of today's proposal. For all of these reasons, the Regional Administrator certifies, pursuant to Section 605(b) of the RFA, that the rule will not have a significant economic impact on a substantial number of small entities.

C. Paperwork Reduction Act

The Paperwork Reduction Act, 44 U.S.C. 3501 *et seq.*, is intended to minimize the reporting and record keeping burden on the regulated community, as well as to minimize the cost of Federal information collection and dissemination. In general, the Act requires that information requests and record-keeping requirements affecting ten or more non-Federal respondents be approved by the Office of Management and Budget. Since this rule does not establish or modify any information or record-keeping requirements, it is not subject to the requirements of the Paperwork Reduction Act.

D. The Unfunded Mandates Reform Act and Executive Order 12875

Title II of the Unfunded Mandates Reform Act (UMRA), Public Law 104–4, establishes requirements for Federal agencies to assess the effects of their regulatory actions on State, local, and tribal governments and the private sector. Under section 202 of the UMRA, EPA generally must prepare a written statement, including a cost-benefit analysis, for proposed and final rules with ''Federal Mandates'' that may result in expenditures to State, local, and tribal governments, in the aggregate, or to the private sector, of $100 million or more in any one year. Before promulgating an EPA rule for which a written statement is needed, section 205 of the UMRA generally requires EPA to identify and consider a reasonable number of regulatory alternatives and adopt the least costly, most cost-effective or least burdensome alternative that achieves the objectives of the rule. The provisions of section 205 do not apply when they are inconsistent with applicable law. Moreover, section 205 allows EPA to adopt an alternative other than the least costly, most cost-effective or least burdensome alternative if the Administrator publishes with the final rule an explanation of why that alternative was not adopted. Before EPA establishes any regulatory requirements that may significantly or uniquely affect small governments, including tribal governments, it must have developed under section 203 of the UMRA a small government agency plan. The plan must provide for notifying potentially affected small governments to have meaningful and timely input in the development of EPA regulatory proposals with significant Federal intergovernmental mandates, and informing, educating, and advising small governments on compliance with the regulatory requirements.

This rule contains no Federal mandates (under the regulatory provisions of the UMRA) for State, local, or tribal governments or sections 205 and 205 of the UMRA. As is explained elsewhere in this preamble, the proposed rule de-designates the Mud Dump Site, and designates instead an area in the ocean suitable for the placement of Remediation Material. Accordingly, it imposes no new enforceable duty on any State, local or tribal governments or the private sector. Even if this rule did contain a Federal mandate, it would not result in annual expenditures of $100 million or more for State, local or tribal governments in the aggregate, or the private sector. Thus, this rule is not subject to the requirements of sections 202 and 205 of UMRA.

For the foregoing reasons, EPA also has determined that this rule contains no regulatory requirements that might significantly or uniquely affect small governments. Thus, the requirements of section 203 of UMRA also do not apply to this rule.

E. The Endangered Species Act

Under Section 7(a)(2) of the Endangered Species Act, 16 U.S.C. 1536(a)(2), federal agencies are required to ''insure that any action authorized, funded, or carried on by such agency * * * is not likely to jeopardize the continued existence of any endangered or threatened species or result in the destruction or adverse modification of habitat of such species. * * *'' Under regulations implementing the Endangered Species Act, a federal agency is required to consult with either the U. S. Fish and Wildlife Service or the National Marine Fisheries Service (depending on the species involved) if the agency's action ''may affect'' endangered or threatened species or their critical habitat. *See*, 50 CFR 402.14(a).

EPA initiated its consultation process with the U.S. Fish and Wildlife Service on April 6, 1995. The consultation process was concluded with them on July 28, 1995, with their concurrence that EPA's action was not likely to adversely affect federally listed species under U. S. Fish and Wildlife Service jurisdiction. EPA initiated threatened and endangered species consultation with the National Marine Fisheries Service on April 4, 1996. Based on this coordination, EPA concluded that the preparation of a biological assessment was warranted for the Kemp's ridley and loggerhead sea turtles, and the humpback and fin whales within the Mud Dump Site and surrounding areas. The National Marine Fisheries Service concurred with this approach on May 8, 1996, and EPA sent them a Biological Assessment in May, 1997, which concluded that there are unlikely to be any effects on the threatened or endangered species or their critical habitat.

List of Subjects in 40 CFR Part 228

Environmental protection, Water pollution control.

Dated: May 6, 1997.

William J. Muszynski,

Acting Regional Administrator, EPA Region 2.

In consideration of the foregoing, EPA is proposing to amend part 228 of title 40 as set forth below.

PART 228—CRITERIA FOR THE MANAGEMENT OF DISPOSAL SITES FOR OCEAN DUMPING

1. The authority citation for part 228 continues to read as follows:

Authority: 33 U.S.C. 1412 and 1418.

2. Section 228.15 is amended by revising paragraph (d)(6) to read as follows:

§ 228.15 Dumping sites designated on a final basis.

* * * * *

(d) * * *

(6) Historical Area Remediation Site (HARS) Designation/Mud Dump Site Termination.

(i) *Status of Former Mud Dump Site:* The Mud Dump Site, designated as an Impact Category I site on May 4, 1984, is terminated.

(ii) *Location:* (A) The HARS (which includes the 2.2 square nautical mile area of the former Mud Dump Site) is a 15.7 square nautical mile area located approximately 3.5 nautical miles east of Highlands, New Jersey and 7.7 nautical miles south of Rockaway, Long Island. The HARS consists of a Primary Remediation Area (PRA), a Buffer Zone, and a No Discharge Zone. The HARS is bounded by the following coordinates:

Point	Latitude DMS	Longitude DMS	Latitude DDM	Longitude DDM
A	40°25′39″ N	73°53′55″ W	40°25.65′N	73°53.92′ W
M	40°25′39″ N	73°48′58″ W	40°25.65′N	73°48.97′ W
P	40°21′19″ N	73°48′57″ W	40°21.32′N	73°48.95′ W
R	40°21′19″ N	73°52′30″ W	40°21.32′N	73°52.50′ W
S	40°21′52″ N	73°53′55″ W	40°21.87′N	73°53.92′ W
V	40°21′52″ N	73°52′30″ W	40°21.87′N	73°52.50′ W

DMS = Degrees, Minutes, Seconds
DDM = Degrees, Decimal Minutes

(B) The PRA, is a 9.0 square nautical mile area to be remediated with at least a 1 meter cap of the Material for Remediation. The PRA is bounded by the following coordinates:

Point	Latitude DMS	Longitude DMS	Latitude DDM	Longitude DDM
B	40°25′23″ N	73°53′34″ W	40°25.38′ N	73°53.57′ W
D	40°25′22″ N	73°52′08″ W	40°25.37′ N	73°52.13′ W
F	40°23′13″ N	73°52′09″ W	40°23.22′ N	73°52.15′ W
G	40°23′13″ N	73°51′28″ W	40°23.22′ N	73°51.47′ W
H	40°22′41″ N	73°51′28″ W	40°22.68′ N	73°51.47′ W
I	40°22′41″ N	73°50′43″ W	40°22.68′ N	73°50.72′ W
L	40°25′22″ N	73°50′44″ W	40°25.37′ N	73°50.73′ W
N	40°25′22″ N	73°49′19″ W	40°25.37′ N	73°49.32′ W
O	40°21′35″ N	73°49′19″ W	40°21.58′ N	73°49.32′ W
Q	40°21′36″ N	73°52′08″ W	40°21.60′ N	73°52.13′ W
T	40°22′08″ N	73°52′08″ W	40°22.13′ N	73°52.13′ W
U	40°22′08″ N	73°53′34″ W	40°22.13′ N	73°53.57′ W

DMS = Degrees, Minutes, Seconds
DDM = Degrees, Decimal Minutes

(iii) *Size:* 15.7 square nautical miles.

(iv) *Depth:* Ranges from 12 to 42 meters.

(v) *Restrictions on Use:*

(A) The site will be managed so as to reduce impacts within the PRA to acceptable levels in accordance with 40 CFR 228.11(c). Use of the site will be restricted to dredged material suitable for use as the Material for Remediation. This material shall be selected so as to ensure it will not cause significant undesirable effects including through bioaccumulation or unacceptable toxicity, in accordance with 40 CFR 227.6.

(B) Placement of Material for Remediation will be limited to the PRA. Placement of Material for Remediation within the PRA is not allowed in a 0.27 nautical mile radius around the following coordinates due to the presence of shipwrecks: 40°25.30′ W , 73°52.80′ N; 40°25.27′ W, 73°52.13′ N; 40°25.07′ W, 73°50.05′ N; 40°22.46′ W, 73°53.27′ N.

(C) No placement of material may take place within the Buffer Zone, although this zone may receive material that incidentally spreads out of the PRA. The Buffer Zone is an approximately 5.7 square nautical mile area (0.27 nautical mile wide band around the PRA), which is bounded by the following coordinates:

Point	Latitude DMS	Longitude DMS	Latitude DDM	Longitude DDM
A	40°25′39″N	73°53′55″W	40°25.65′N	73°53.92′W
B	40°25′23″N	73°53′34″W	40°25.38′N	73°53.57′W
C	40°25′39″N	73°51′48″W	40°25.65′N	73°51.80′W
D	40°25′22″N	73°52′08″W	40°25.37′N	73°52.13′W
E	40°23′48″N	73°51′48″W	40°23.80′N	73°51.80′W
F	40°23′13″N	73°52′09″W	40°23.22′N	73°52.15′W
G	40°23′13″N	73°51′28″W	40°23.22′N	73°51.47′W
H	40°22′41″N	73°51′28″W	40°22.68′N	73°51.47′W
I	40°22′41″N	73°50′43″W	40°22.68′N	73°50.72′W
J	40°23′48″N	73°51′06″W	40°23.80′N	73°51.10′W
K	40°25′39″N	73°51′06″W	40°25.65′N	73°51.10′W
L	40°25′22″N	73°50′44″W	40°25.37′N	73°50.73′W
M	40°25′39″N	73°48′58″W	40°25.65′N	73°48.97′W
N	40°25′22″N	73°49′19″W	40°25.37′N	73°49.32′W
O	40°21′35″N	73°49′19″W	40°21.58′N	73°49.32′W
P	40°21′19″N	73°48′57″W	40°21.32′N	73°48.95′W
Q	40°21′36″N	73°52′08″W	40°21.60′N	73°52.13′W
R	40°21′19″N	73°52′30″W	40°21.32′N	73°52.50′W
S	40°21′52′N	73°53′55″W	40°21.87′N	73°53.92′W
T	40°22′08″N	73°52′08″W	40°22.13′N	73°52.13′W
U	40°22′08″N	73°53′34″W	40°22.13′N	73°53.57′W
V	40°21′52″N	73°52′30″W	40°21.87′N	73°52.50′W

DMS = Degrees, Minutes, Seconds
DDM = Degrees, Decimal Minutes

(D) No placement or incidental spread of the material is allowed within the No Discharge Zone, an approximately 1.0 square nautical mile area, bounded by the following coordinates:

Point	Latitude DMS	Longitude DMS	Latitude DDM	Longitude DDM
C	40°25′39″ N	73°51′48″ W	40°25.65′ N	73°51.80′ W
E	40°23′48″ N	73°51′48″ W	40°23.80′ N	73°51.80′ W
J	40°23′48″ N	73°51′06″ W	40°23.80′ N	73°51.10′ W
K	40°25′39″ N	73°51′06″ W	40°25.65′ N	73°51.10′ W

DMS = Degrees, Minutes, Seconds
DDM = Degrees, Decimal Minutes

(vi) *Period of Use:* Continuing use until EPA determines that the PRA has been sufficiently capped with at least 1 meter of the Material for Remediation. At that time, EPA will undertake any necessary rulemaking to de-designate the HARS.

* * * * *

[FR Doc. 97–12480 Filed 5–8–97; 3:15 pm]

BILLING CODE 6560–50–P

Notices

Federal Register
Vol. 62, No. 92
Tuesday, May 13, 1997

This section of the FEDERAL REGISTER contains documents other than rules or proposed rules that are applicable to the public. Notices of hearings and investigations, committee meetings, agency decisions and rulings, delegations of authority, filing of petitions and applications and agency statements of organization and functions are examples of documents appearing in this section.

DEPARTMENT OF AGRICULTURE

Forest Service

Rocky Mountain Region: Colorado, Kansas, Nebraska, South Dakotas, Eastern Wyoming; Legal Notice of the Opportunity To Comment on Certain Proposed Actions and of Decisions Subject to Notice and Comment

AGENCY: Forest Service, USDA.

ACTION: Notice; newspapers for legal notices.

SUMMARY: This is a list of those newspapers that will be used to publish notice of all decisions which are subject to appeal under 36 CFR 217, notice of the opportunity to comment on certain proposed actions pursuant to 36 CFR 215.5, and notice of decisions subject to appeal under the general provisions of 36 CFR part 215. As required at 36 CFR 215.5 and 215.9, such notice shall constitute legal evidence that the agency has given timely and constructive notice of decisions that are subject to public notice and comment and administrative appeal. Newspaper publication of notices of decisions is in addition to direct notice to those who have requested notice in writing and to those known to be interested in or affected by a specific decision.

EFFECTIVE DATE: Use of these newspapers for purposes of publishing the notices required under the provisions of 36 CFR 215 shall begin November 30, 1996.

FOR FURTHER INFORMATION CONTACT: Larry D. Keown, Regional Appeals and Litigation Coordinator, Rocky Mountain Region, Box 25127, Lakewood, Colorado 80225, Area Code 303–275–5148.

SUPPLEMENTARY INFORMATION: Responsible Officials in the Rocky Mountain Region shall give notice of the opportunity to comment on certain proposed actions and of decisions subject to appeal pursuant to 36 CFR Part 215 in the following newspapers which are listed by Forest Service unit. Where more than one newspaper is listed for any unit, the first newspaper listed is the primary newspaper which shall be used to constitute legal evidence that the agency has given timely and constructive notice of decisions that are subject to administrative appeal. The day after the publication of the public notice in the primary newspaper shall be the first day of the appeal filing period.

Decisions by the Regional Forester

The Denver Post, published daily in Denver, Denver County, Colorado, for decisions affecting National Forest System lands in the States of Colorado, Nebraska, Kansas, and eastern Wyoming and for any decision of Region-wide impact. In addition, notice of decisions made by the Regional Foresters will also be published in the Rocky Mountain News, Published daily in Denver, Denver County, Colorado. Notice of decisions affecting National Forest System lands in the State of South Dakota will also be published in the The Rapid City Journal, published daily in Rapid City, Pennington County, South Dakota. For these decisions affecting a particular unit, the newspaper specific to that unit will be used.

Arapaho and Roosevelt National Forests, Colorado; Forest Supervisor Decisions

The Denver Post, published daily in Denver, Denver County, Colorado.

District Ranger Decisions

Redfeather and Estes-Poudre Districts: Coloradoan, published daily in Fort Collins, Larimer County, Colorado.

Pawnee District: Greeley Tribune, published daily in Greeley, Weld County, Colorado.

Boulder District: Boulder Daily Camera, published daily in Boulder, Boulder County, Colorado.

Clear Creek District: Clear Creek Courant, published weekly in Idaho Springs, Clear Creek County, Colorado.

Sulphur District: Granby Sky High News, published weekly in Granby, Grand County, Colorado.

Grand Mesa, Uncompahgre and Gunnison National Forests, Colorado; Forest Supervisor Decisions

Grand Junction Daily Sentinel, published daily in Grand Junction, Mesa County, Colorado.

District Ranger Decisions

Collbran and Grand Junction Districts: Grand Junction Daily Sentinel, published daily in Grand Junction, Mesa County, Colorado.

Paonia District: Delta County Independent, published weekly in Delta, Delta County, Colorado.

Cebolla and Taylor River Districts: Gunnison Country Times, published weekly in Gunnison, Gunnison County, Colorado.

Norwood District: Telluride Times-Journal, published weekly in Telluride, San Miguel County, Colorado.

Ouray District: Montrose Daily Press, published daily in Montrose, Montrose County, Colorado.

Pike and San Isabel National Forests; Forest Supervisor Decisions

Pueblo Chieftain, published daily in Pueblo, Pueblo County, Colorado.

District Ranger Decisions

San Carlos District: Pueblo Chieftain, published daily in Pueblo, Pueblo County, Colorado.

Comanche District: Plainsman Herald, published weekly in Springfield, Baca County, Colorado. In addition, notice of decisions made by the District Ranger will also be published in the La Junta Tribune Democrat, published daily in La Junta, Otero County, Colorado, and in the Ark Valley Journal, published weekly in La Junta, Otero County, Colorado.

Cimarron District: Tri-State News, published weekly in Elkhart, Morton County, Kansas.

South Platte District: Daily News Press, published daily in Castle Rock, Douglas County, Colorado. In addition, notice of decisions made by the District Ranger will also be published in the High Timber Times, published weekly in Conifer, Jefferson County, Colorado, and in the Fairplay Flume, published weekly in Fairplay, Park County, Colorado. Leadville District: Herald Democrat, published weekly in Leadville, Lake County, Colorado.

Salida District: *The Mountain Mail*, published daily in Salida, Chaffee County, Colorado.

South Park District: *Fairplay Flume*, published weekly in Fairplay, Park County, Colorado.

Pikes Peak District: *Gazette Telegraph*, published daily in Colorado Springs, El Paso County, Colorado.

Rio Grande National Forest, Colorado; Forest Supervisor Decisions

Valley Courier, published daily in Alamosa, Alamosa County, Colorado.

District Ranger Decisions

Valley Courier, published daily in Alamosa, Alamosa County, Colorado.

Routt National Forest, Colorado; Forest Supervisor Decisions

Laramie Daily Boomerang, published daily in Laramie, Albany County, Wyoming. In addition, for decisions affecting an individual district(s), the local district(s) newspaper will also be used.

District Ranger Decision

Bears Ears District: *Northwest Colorado Daily Press,* published daily in Craig, Moffat County, Colorado. In addition, notice of decisions by the District Ranger will also be published in the *Hayden Valley Press,* published weekly in Hayden, Routt County, Colorado, and in the *Steamboat Pilot,* published weekly in Steamboat Springs, Routt County, Colorado.

Yampa and Hahns Peak Districts: *Steamboat Pilot,* published weekly in Steamboat Springs, Routt County, Colorado.

Middle Park District: *Middle Park Times,* published weekly in Kremmling, Grand County, Colorado.

North Park District: *Jackson County Star,* published weekly in Walden, Jackson County, Colorado.

San Juan National Forest, Colorado; Forest Supervisor Decisions.

Durango Herald, published daily in Durango, La Plata County, Colorado.

District Ranger Decisions

Durango Herald, published daily in Durango, La Plata County, Colorado.

White River National Forest, Colorado; Forest Supervisor Decisions.

The Glenwood Post, published Monday through Saturday in Glenwood Springs, Garfield County, Colorado.

District Ranger Decisions

Aspen District: *Aspen Times,* published weekly in Aspen, Pitkin County, Colorado.

Blanco District: *Meeker Herald,* published weekly in Meeker, Rio Blanco County, Colorado.

Dillon District: *Summit Daily News,* published daily in Frisco, Summit County, Colorado.

Eagle District: Eagle Valley Enterprise, published weekly in Eagle, Eagle County, Colorado.

Holy Cross District: Vail Trail, published weekly in Vail, Eagle County, Colorado.

Rifle District: Citizen Telegram, published weekly in Rifle, Garfield County, Colorado.

Sopris District: Valley Journal, published weekly Carbondale, Garfield County, Colorado.

Nebraska National Forest, Nebraska; Forest Supervisor Decisions.

The Rapid City Journal, published daily in Rapid City, Pennington County, South Dakota for decisions affecting National Forest System lands in the State of South Dakota.

The Omaha World Herald, published daily in Omaha, Douglas County, Nebraska for decisions affecting National Forest System lands in the State of Nebraska.

District Ranger Decisions

Bessey District: *The North Platte Telegraph,* published daily in North Platte, Lincoln County, Nebraska.

Pine Ridge District: *The Chadron Record,* published weekly in Chadron, Dawes County, Nebraska.

Samuel R. McKelvie National Forest: *The Valentine Newspaper,* published weekly in Valentine, Cherry County, Nebraska.

Fall River and Wall Districts, Buffalo Gap National Grassland: *The Rapid City Journal,* published daily in Rapid City, Pennington County, South Dakota.

Fort Pierre National Grassland: *The Capital Journal,* published daily in Pierre, Hughes County, South Dakota.

Fall River and Wall District: The Rapid City Journal, published daily in Rapid City, Pennington County, South Dakota.

Fort Pierre National Grassland: *The Capital Journal,* published Monday thru Friday Pierre, Hughes County, South Dakota.

Black Hills National Forest, South Dakota and eastern Wyoming Forest Supervisor Decisions.

The Rapid City Journal, published daily in Rapid City, Pennington County, South Dakota.

District Ranger Decisions

The Rapid City Journal, published daily in Rapid City, Pennington County, South Dakota.

Bighorn National Forest, Wyoming; Forest Supervisor Decisions.

Sheridan Press, published daily in Sheridan, Sheridan County, Wyoming. In addition, for decisions affecting an individual district(s), the local district(s) newspaper will be used (see listing below).

District Ranger Decisions

Tongue District: *Sheridan Press,* published daily in Sheridan, Sheridan County, Wyoming.

Buffalo District: *Buffalo Bulletin,* published weekly in Buffalo Johnson County, Wyoming.

Medicine Wheel District: *Lovell Chronicle,* published weekly in Lovell, Big Horn County, Wyoming.

Tensleep District: *Northern Wyoming Daily News,* published daily in Worland, Washakie County, Wyoming.

Paintrock District: *Greybull Standard,* published weekly in Greybull, Big Horn County, Wyoming.

Medicine Bow National Forest, Wyoming; Forest Supervisor Decisions

Laramie Daily Boomerang, published daily in Laramie, Albany County, Wyoming.

District Ranger Decisions

Laramie District: *Laramie Daily Boomerang,* published daily in Laramie, Albany County, Wyoming.

Douglas District: *Casper Star-Tribune,* published daily in Casper, Natrona County, Wyoming.

Brush Creek and Hayden Districts: *Rawlins Daily Times,* published daily in Rawlins, Carbon County, Wyoming.

Shoshone National Forest, Wyoming; Forest Supervisor Decisions

Cody Enterprise, published twice weekly in Cody, Park County, Wyoming.

District Ranger Decisions

Clark Fork District: *Powell Tribune,* published twice weekly in Powell, Park County, Wyoming.

Wapiti and Greybull Districts: *Cody Enterprise,* published twice weekly in Cody, Park County, Wyoming.

Wind River District: *The Dubois Frontier,* published weekly in Dubois, Teton County, Wyoming.

Lander District: *Wyoming State Journal,* published twice weekly in Lander, Fremont County, Wyoming.

Dated: May 5, 1997.

Thomas P. Ryan,

Acting Regional Forester.

[FR Doc. 97–12143 Filed 5–12–97; 8:45 am]

BILING CODE 3410–11–M

DEPARTMENT OF AGRICLTURE

Forest Service

National Urban and Community Forestry Advisory Council

AGENCY: Forest Service, USDA.

ACTION: Notice of meeting.

SUMMARY: The National Urban and Community Forestry Advisory Council will hold a closed conference call on Monday, May 19, 1997, from 12:00 p.m. to 2:30 p.m. Eastern time. The meeting will be chaired by Genni Cross of The Trust for Public Land/California Releaf. The purpose of the conference call is to vote on the finalists for the 1997 Challenge Cost-Share grant program. The Council will then make recommendations for grant awards to the Forest Service. The Challenge Cost-Share grant program is advertised annually to solicit proposals in categories identified by the Council which will advance the knowledge of, and promote interest in, urban and community forestry needs. Pursaunt to 5 U.S.C. 552(c)(9)(B), the conference call will be closed to the public.

DATES: The conference call will be held May 19, 1997.

FOR FURTHER INFORAMTION CONTACT: Suzanne M. del Villar, Cooperative Forestry Staff, (970) 928–9264.

Dated: May 6, 1997.

Dan Glickman,

Secretary, Department of Agriculture.

[FR Doc. 97–12418 Filed 5–12–97; 8:45 am]

BILLING CODE 3410–11–M

DEPARTMENT OF AGRICULTURE

Forest Service

National Urban and Community Forestry Advisory Council

AGENCY: Forest Service, USDA.

ACTION: Notice of meeting.

SUMMARY: The National Urban and Community Forestry Advisory Council will meet in Sacramento, California, June 5–7, 1997. The purpose of the meeting is to review that status of the Council's annual report, continue discussion on emerging issues in Urban and Community Forestry, and determine the grant categories for the 1998 Challenge Cost-Share grant program.

DATES: The meeting will be held June 5–7, 1997.

ADDRESSES: The meeting will be held at the Holiday Inn Sacramento Northeast, 5321 Date Avenue, Sacramento, California. A tour of local projects will be June 5, 9:00 a.m.–3:00 p.m.

Individuals who wish to speak at the meeting or to propose agenda items must send their names and proposals to Suzanne M. del Villar, Executive Assistance, National Urban and Community Forestry Advisory Council, 1042 Park West Court, Glenwood Springs, CO 81601.

FOR FURTHER INFORMATION CONTACT: Suzanne M. del Villar, Cooperative Forestry Staff, (970) 928–9264.

SUPPLEMENTARY INFORMATION: The Challenge Cost-Share grant categories, identified by the Council, are advertised annually to solicit proposals for projects to advance the knowledge of, and promote interest in, urban and community forestry. Pursuant to 5 U.S.C. 552(b)(9)(B), the meeting will be closed from approximately 8:30 to 10:00 a.m. on June 7 in order for the Council to determine the categories for the 1998 Challenge Cost-Share grant program. Otherwise, the meeting is open to the public.

Persons who wish to bring urban and community forestry matters to the attention of the Council may file written statements with the Council staff before or after the meeting. Public input sessions will be provided and individuals who made written requests by May 30 will have the opportunity to address the Council. Council discussion is limited to Forest Service staff and Council members.

Dated: May 6, 1997.

Dan Glickman,

Secretary, Department of Agriculture.

[FR Doc. 97–12419 Filed 5–12–97; 8:45 am]

BILLING CODE 3410–11–M

ASSASSINATION RECORDS REVIEW BOARD

Sunshine Act Meeting

ASSASSINATION RECORDS REVIEW BOARD FEDERAL REGISTER CITATION OF PREVIOUS ANNOUNCEMENT: Sunshine Act Meeting Notice, 62 FR 24635 (5–6–97).

PREVIOUSLY ANNOUNCED TIME AND DATE OF THE MEETING: May 12–13, 1997—ARRB, 600 E Street, NW, Washington, DC.

CHANGES IN THE MEETING: This closed meeting has been canceled and will be rescheduled on a future date.

CONTACT PERSON FOR MORE INFORMATION: Eileen Sullivan, Assistant Press and Public Affairs Officer, 600 E Street, NW, Second Floor, Washington, DC 20530. Telephone: (202) 724–0088; Fax: (202) 724–0457.

David G. Marwell,

Executive Director.

[FR Doc. 97–12688 Filed 5–9–97; 2:16 pm]

BILLING CODE 6118–01–P

COMMISSION ON CIVIL RIGHTS

Agenda and Notice of Public Meeting of the California Advisory Committee

Notice is hereby given, pursuant to the provisions of the rules and regulations of the U.S. Commission on Civil Rights, that a meeting of the California Advisory Committee to the Commission will convene at 10:00 a.m. and adjourn at 6:30 p.m. on May 29, 1997, at the Westin South Coast Plaza, San Carlos Room, 686 Anton Boulevard, Costa Mesa, California 92626. The purpose of the meeting is to obtain follow up data on civil rights issues in Orange County originally raised in December 1993, and to inquire into law enforcement procedures for identification and tracking of youth for placement in gang-tracking databases.

Persons desiring additional information, or planning a presentation to the Committee, should contact Committee Chairperson Fernando Hernandez, 310–696–0104, or Philip Montez, Director of the Western Regional Office, 213–894–3437 (TDD 213–894–3435). Hearing-impaired persons who will attend the meeting and require the services of a sign language interpreter should contact the Regional Office at least five (5) working days before the scheduled date of the meeting.

The meeting will be conducted pursuant to the provisions of the rules and regulations of the Commission.

Dated at Washington, DC, May 7, 1997.

Carol-Lee Hurley,

Chief, Regional Programs Coordination Unit.

[FR Doc. 97–12430 Filed 5–12–97; 8:45 am]

BILLING CODE 6335–01–P

DEPARTMENT OF COMMERCE

International Trade Administration

[A–423–805]

Cut-to-Length Carbon Steel Plate From Belgium: Extension of Time Limits for Antidumping Duty Administrative Review

AGENCY: Import Administration, International Trade Administration, Department of Commerce.

ACTION: Extension of time limits for antidumping duty administrative review of cut-to-length carbon steel plate from Belgium.

SUMMARY: The Department of Commerce (''the Department'') is extending the time limit for the preliminary results of the third antidumping duty administrative review of the

antidumping order on Cut-to-Length Carbon Steel Plate from Belgium. This review covers one manufacturer and exporter of the subject merchandise: Fabrique de Fer de Charleroi. The period of review is August 1, 1995 through July 31, 1996.

EFFECTIVE DATE: May 13, 1997.

FOR FURTHER INFORMATION CONTACT: Helen Kramer or Linda Ludwig, AD/CVD Enforcement Group III—Office 8, Import Administration, International Trade Administration, U.S. Department of Commerce, 14th Street and Constitution Avenue, N.W., Washington D.C. 20230, telephone (202) 482–0405 or 482–3833, respectively.

SUPPLEMENTARY INFORMATION: The Department initiated this administrative review on September 16, 1996 (61 FR 48882). Because it is not practicable to complete this review within the time limits mandated by section 751(a)(3)(A) of the Tariff Act of 1930 (''the Act''), as amended by the Uruguay Round Agreements Act of 1994, the Department is extending the time limit for the preliminary results of the aforementioned reviews to June 4, 1997. *See* memorandum from Joseph A. Spetrini to Robert S. LaRussa, which is on file in Room B–099 at the Department's headquarters.

This extension of time limit is in accordance with section 751(a)(3)(A) of the Act.

Dated: May 5, 1997.

Richard O. Weible,

Acting Deputy Assistant Secretary AD/CVD Enforcement Group III.

[FR Doc. 97–12508 Filed 5–12–97; 8:45 am]

BILLING CODE 3510–DS–P

DEPARTMENT OF COMMERCE

International Trade Administration

[A–475–703]

Granular Polytetrafluoroethylene Resin From Italy; Preliminary Results of Antidumping Duty Administrative Review

AGENCY: Import Administration, International Trade Administration, Department of Commerce.

ACTION: Notice of preliminary results of antidumping duty administrative review.

SUMMARY: In response to a request by the petitioner, the Department of Commerce (the Department) is conducting an administrative review of the antidumping duty order on granular polytetrafluoroethylene (PTFE) resin from Italy. This review covers one manufacturer/exporter of the subject merchandise to the United States for the period August 1, 1995, through July 31, 1996.

We have preliminarily determined that dumping margins exist for the respondent. Interested parties are invited to comment on these preliminary results. Parties who submit arguments in this proceeding are requested to submit with each argument (1) a statement of the issue, and (2) a brief summary of the argument.

EFFECTIVE DATE: May 13, 1997.

FOR FURTHER INFORMATION CONTACT: Chip Hayes or Richard Rimlinger, Import Administration, International Trade Administration, U.S. Department of Commerce, 14th Street and Constitution Avenue, N.W., Washington, DC 20230; telephone: (202) 482–4733.

SUPPLEMENTARY INFORMATION:

Applicable Statute and Regulations

Unless otherwise indicated, all citations to the Tariff Act of 1930, as amended (the Act), are references to the provisions effective January 1, 1995, the effective date of the amendments made to the Act by the Uruguay Round Agreements Act (URAA). In addition, unless otherwise indicated, all citations to the Department's regulations are to the current regulations, as amended by the interim regulations published in the **Federal Register** on May 11, 1995 (60 FR 25130).

Background

On August 30, 1988, the Department published in the **Federal Register** (53 FR 33163) the antidumping duty order on granular PTFE resin from Italy. On August 12, 1996, the Department published a notice of ''Opportunity to Request Administrative Review'' of the antidumping duty order for the period of August 1, 1995 through July 31, 1996 (61 FR 41768). We received a timely request for review from the petitioner, E. I. DuPont de Nemours & Company. On September 17, 1996, the Department initiated a review of Ausimont S.p.A. (61 FR 48882).

Scope of the Review

The product covered by this review is granular PTFE resins, filled or unfilled. This order also covers PTFE wet raw polymer exported from Italy to the United States. *See Granular Polytetrafluoroethylene Resin from Italy; Final Determination of Circumvention of Antidumping Duty Order,* 58 FR 26100 (April 30, 1993). This order excludes PTFE dispersions in water and fine powders. During the period covered by this review, such merchandise was classified under item number 3904.61.00 of the *Harmonized Tariff Schedule* (HTS). We are providing this HTS number for convenience and Customs purposes only. The written description of the scope remains dispositive.

The review covers one Italian manufacturer/exporter of granular PTFE resin, Ausimont S.p.A., and the period August 1, 1995 through July 31, 1996.

Constructed Export Price

The Department calculated constructed export price (CEP) as defined in section 772(b) of the Act because all sales to unrelated parties were made after importation of the subject merchandise into the United States. We based CEP on the packed, delivered prices to unrelated purchasers in the United States (the starting price). We made deductions for movement expenses, in accordance with section 772(c)(2)(A) of the Act, including international freight, marine insurance, brokerage and handling, U.S. inland freight, other transportation expenses, and U.S. customs duties.

In accordance with section 772(d)(1) of the Act and the Statement of Administrative Action (SAA) accompanying the URAA (at 823–824), we also adjusted the starting price by deducting selling expenses associated with economic activities occurring in the United States, including direct selling expenses assumed on behalf of the buyer and U.S. indirect selling expenses. Finally, we made an adjustment for an amount of profit allocated to these expenses, in accordance with section 772(d)(3) of the Act and as described in section 772(f).

For sales of granular PTFE resin finished in the United States from PTFE wet raw polymer imported from Italy, we determined that the special rule for merchandise with value added after importation under section 772(e) of the Act did not apply because the value added in the United States by the affiliated person did not exceed substantially the value of the subject merchandise. Therefore, for subject merchandise further manufactured in the United States, we used the starting price of the subject merchandise and deducted the costs of further manufacturing to determine the CEP for such merchandise in accordance with section 772(d)(2) of the Act. We deducted the costs of further manufacturing in the United States and that portion of the profit on sales of further-manufactured merchandise attributable to the additional manufacturing. No other adjustments were claimed or allowed.

Normal Value

In order to determine whether there was a sufficient volume of sales of granular PTFE resin in the home market to serve as a viable basis for calculating normal value (NV), we compared respondent's volume of home market sales of the foreign like product to the volume of U.S. sales of the subject merchandise, in accordance with section 773(a) of the Act. Because the aggregate volume of home market sales of the foreign like product for Ausimont was greater than five percent of the respective aggregate volume of U.S. sales for the subject merchandise, we determined that the home market provides a viable basis for calculating NV for Ausimont. Therefore, in accordance with section 773(a)(1)(B)(i) of the Act, we based NV on the prices at which the foreign like product was first sold for consumption in the exporting country, in the usual commercial quantities and in the ordinary course of trade.

We calculated NV on a monthly weighted-average basis. Where possible, we compared U.S. sales to sales of identical merchandise in Italy. When there were no identical sales of the foreign like product available for matching purposes, we based NV on contemporaneous sales of the most similar foreign like product, in accordance with section 771(16) of the Act. Because filled and unfilled resins generally are not similar in terms of their physical characteristics, we compared, whenever possible, home market sales of filled resins to U.S. sales of filled resins and home market sales of unfilled resins with U.S. sales of unfilled resins. We matched filled resins sold in the two markets according to the amounts and types of fillers and the percentages of fillers in the products sold based upon the information provided in Ausimont's questionnaire response.

Where applicable, we made adjustments for packing and movement expenses, in accordance with sections 773(a)(6) (A) and (B) of the Act. In order to adjust for differences in packing between the two markets, we deducted home market packing costs from NV and added U.S. packing costs. We also made adjustments for differences in costs attributable to differences in physical characteristics of the merchandise, pursuant to section 773(a)(6)(C)(ii) of the Act, and for other differences in the circumstances of sale (COS) in accordance with section 773(a)(6)(C)(iii) of the Act. These COS adjustments included deductions for home market rebates and credit.

In accordance with section 773(a)(4) of the Act, we used constructed value (CV) as the basis for NV when there were no comparable sales of the foreign like product in the home market. We calculated CV in accordance with section 773(e) of the Act. We included the cost of materials and fabrication, selling, general and administrative (SG&A) expenses, and profit. In accordance with section 773(e)(2)(A) of the Act, we based SG&A expenses and profit on the amounts incurred and realized by Ausimont in connection with the production and sale of the foreign like product in the ordinary course of trade for consumption in Italy. For selling expenses, we used the weighted-average home market selling expenses. We included U.S. packing pursuant to section 773(e)(3) of the Act. Where appropriate, we made adjustments to CV, in accordance with section 773(a)(8) of the Act, for differences in the COS. Specifically, we made COS adjustments by deducting home market direct selling expenses. We also made a CEP-offset adjustment to NV for indirect selling expenses pursuant to section 773(a)(7)(B) of the Act as discussed below.

Level of Trade

As instructed by section 773(a)(1)(A) of the Act and the SAA at 829–31, we determine, to the extent practicable, NV for sales at the same level of trade as the U.S. sales (either export price or CEP). When there are no sales at the same level of trade, we compare U.S. sales to home market (or, if appropriate, third-country) sales at a different level of trade, and adjust NV, if appropriate. The NV level of trade is that of the starting-price sales in the home market. When NV is based on CV, the level of trade is that of the sales from which we derive selling, SG&A and profit.

As the Department explained in *Gray Portland Cement and Clinker from Mexico: Final Results of Antidumping Duty Administrative Review*, 62 FR 17148, 17156 (April 9, 1997), for both export price and CEP, the relevant transaction for the level-of-trade analysis is the sale (or constructed sale) from the exporter to the importer. While the starting price for CEP is that of a subsequent resale to an unaffiliated buyer, the construction of the CEP results in a price that would have been charged if the importer had not been affiliated. We calculate the CEP by removing from the first resale to an independent U.S. customer the expenses under section 772(d) of the Act and the profit associated with these expenses. These expenses represent activities undertaken by the affiliated importer. As such, they occur after the transaction between the exporter and the importer for which we construct CEP. Because the expenses deducted under section 772(d) represent selling activities in the United States, the deduction of these expenses normally yields a different level of trade for the CEP than for the later resale (which we use for the starting price). Movement charges, duties and taxes deducted under section 772(c) do not represent activities of the affiliated importer, and we do not remove them to obtain the CEP level of trade.

To determine whether home market sales are at a different level of trade than U.S. sales, we examine whether the home market sales are at different stages in the marketing process than the U.S. sales. The marketing process in both markets begins with goods being sold by the producer and extends to the sale to the final user, regardless of whether the final user is an individual consumer or an industrial user. The chain of distribution between the producer and the final user may have many or few links, and each respondent's sales occur somewhere along this chain. In the United States, the respondent's sales are generally to an importer, whether independent or affiliated. We review and compare the distribution systems in the home market and U.S. export markets, including selling functions, class of customer, and the extent and level of selling expenses for each claimed level of trade. Customer categories such as distributor, original equipment manufacturer (OEM), or wholesaler are commonly used by respondents to describe levels of trade, but, without substantiation, they are insufficient to establish that a claimed level of trade is valid. An analysis of the chain of distribution and of the selling functions substantiates or invalidates the claimed levels of trade. If the claimed levels are different, the selling functions performed in selling to each level should also be different. Conversely, if levels of trade are nominally the same, the selling functions performed should also be the same. Different levels of trade necessarily involve differences in selling functions, but differences in selling functions, even substantial ones, are not alone sufficient to establish a difference in the levels of trade. A different level of trade is characterized by purchasers at different stages in the chain of distribution and sellers performing qualitatively or quantitatively different functions in selling to them.

When we compare U.S. sales to home market sales at a different level of trade,

we make a level-of-trade adjustment if the difference in levels of trade affects price comparability. We determine any effect on price comparability by examining sales at different levels of trade in a single market, the home market. Any price effect must be manifested in a pattern of consistent price differences between home market sales used for comparison and sales at the equivalent level of trade of the export transaction. To quantify the price differences, we calculate the difference in the average of the net prices of the same models sold at different levels of trade. Net prices are used because any difference will be due to differences in level of trade rather than other factors. We use the average difference in net prices to adjust NV when NV is based on a level of trade different from that of the export sale. If there is no pattern of consistent price differences, the difference in levels of trade does not have a price effect and, therefore, no adjustment is necessary.

The statute also provides for an adjustment to NV when NV is based on a level of trade different from that of the CEP if the NV level is more remote from the factory than the CEP and there is no basis to determine whether the difference in levels of trade between CEP and NV affects the comparability of their prices. This latter situation might occur where there is no home market level of trade equivalent to the U.S. sales level or where there is an equivalent home market level but the data are insufficient to support a conclusion on price effect. This adjustment, the CEP offset, is identified in section 773(7)(B) and is the lower of the following:

- The indirect selling expenses on the home market sale, or
- The indirect selling expenses deducted from the starting price used to calculate CEP.

The CEP offset is not automatic each time we use CEP. The CEP offset is made only when the level of trade of the home market sale is more advanced than the level of trade of the U.S. (CEP) sale and there is not an appropriate basis for determining whether there is an effect on price comparability.

We requested information about the selling functions associated with each phase of marketing, or the equivalent, in each of Ausimont's markets. Ausimont claimed one channel of distribution and one level of trade for sales to its U.S. affiliate, Ausimont U.S.A., Inc., and only one channel of distribution and one level of trade for its home-market sales to fabricators.

To determine whether Ausimont's CEP and NV sales were at the same level of trade, we reviewed information in Ausimont's questionnaire response regarding the selling functions and marketing processes associated with both categories of sales.

The evidence of record establishes that all sales in the home market are at a single level of trade. In the home market, Ausimont sold directly to fabricators. These sales entailed selling functions such as inventory maintenance, technical advice, strategic and economic planning, market research, computer assistance, personnel training, engineering services, advertising, and freight and delivery services.

The U.S. subsidiary's sales entailed selling functions such as inventory maintenance, technical advice, strategic and economic planning, market research, computer assistance, personnel training, engineering services, advertising, and freight and delivery services. Although sales through Ausimont U.S.A. to the first unaffiliated party in the United States were made at a marketing stage similar to Ausimont's home-market sales and entailed essentially the same selling functions as described above, we are using the CEP methodology in making price comparisons. In determining the level of trade for the U.S. sales, we only considered the selling activities reflected in the price after making the appropriate adjustments under section 772(d) of the Act. (See, *e.g., Certain Stainless Wire Rods From France: Final Results of Antidumping Administrative Review*, 61 FR 47874, 47879–80 (Sept. 11, 1996).)

After deducting expenses for selling functions which the U.S. subsidiary provides, the CEP still contains indirect selling expenses which Ausimont S.p.A provides. Based on a comparison of the home market and this CEP level of trade, we find significantly different levels of selling functions in each price. Further, based on the distribution phase at which the home-market transactions take place and the nature of the selling functions they entail, we find the home market sales to be at a different level of trade from and more remote from the factory than the CEP sales.

As noted above, all Ausimont's home market sales were at a single level of trade which is different from the CEP level of trade. Section 773(a)(7)(A) of the Act directs us to make an adjustment for difference in levels of trade where such differences affect price comparability. However, we were unable to quantify such price differences from information on the record. Because we have determined that the home-market level of trade is more remote from the factory than the CEP level of trade but the data necessary to calculate a level-of-trade adjustment are unavailable, we made a CEP-offset adjustment to NV pursuant to section 773(a)(7)(B) of the Act.

Preliminary Results of Review

As a result of this review, we preliminarily determine that the following weighted-average dumping margin exists:

Manufacturer/exporter	Period	Margin (percent)
Ausimont S.p.A.	08/01/95–07/31/96	6.83

Parties to the proceeding may request disclosure within five days of the date of publication of this notice. Any interested party may request a hearing within 10 days of publication. Any hearing, if requested, will be held 44 days after the date of publication, or the first workday thereafter. Case briefs and/or written comments from interested parties may be submitted not later than 30 days after the date of publication. Rebuttal briefs and rebuttals to written comments, limited to issues raised in the case briefs and comments, may be filed not later than 37 days after the date of publication. Parties who submit arguments in this proceeding are requested to submit with each argument (1) a statement of the issue and (2) a brief summary of the argument. The Department will issue the final results of the administrative review, including the results of its analysis of issues raised in any such written comments or at a hearing, within 120 days of issuance of these preliminary results.

The Department shall determine, and Customs shall assess, antidumping duties on all appropriate entries. Individual differences between USP and NV may vary from the percentage stated above.

The Department will issue appraisement instructions directly to Customs. The final results of this review shall be the basis for the assessment of

antidumping dumping duties on entries of merchandise covered by the determination and for future deposits of estimated duties.

Furthermore, the following deposit requirements will be effective upon completion of the final results of this administrative review for all shipments of PTFE resin from Italy entered, or withdrawn from warehouse, for consumption on or after the publication date of the final results of this administrative review, as provided by section 751(a)(1) of the Act: (1) The cash deposit rate for Ausimont will be the rate established in the final results of administrative review; (2) for merchandise exported by manufacturers or exporters not covered in this review but covered in the original less than fair value (LTFV) investigation or a previous review, the cash deposit will continue to be the most recent rate published in the final determination or final results for which the manufacturer or exporter received a company-specific rate; (3) if the exporter is not a firm covered in this review, a previous review, or the original investigation, but the manufacturer is, the cash deposit rate will be that established for the manufacturer of the merchandise in the final results of this review or the LTFV investigation; and (4) if neither the exporter nor the manufacturer is a firm covered in this or any previous review, the cash deposit rate will be 46.46 percent, the ''all others'' rate established in the LTFV investigation (50 FR 26019, June 24, 1985).

This notice also serves as a preliminary reminder to importers of their responsibility to file a certificate regarding the reimbursement of antidumping duties prior to liquidation of the relevant entries during this review period. Failure to comply with this requirement could result in the Secretary's presumption that reimbursement of antidumping duties occurred and the subsequent assessment of double antidumping duties.

This administrative review and notice are in accordance with section 751(a)(1) of the Act (19 U.S.C. 1675(a)(1)) and 19 CFR 353.22 (1996).

Dated: May 5, 1997.

Robert S. LaRussa,

Acting Assistant Secretary for Import Administration.

[FR Doc. 97–12506 Filed 5–12–97; 8:45 am]

BILLING CODE 3510–DS–P

DEPARTMENT OF COMMERCE

International Trade Administration

[A–489–501]

Certain Welded Carbon Steel Pipe and Tube From Turkey: Preliminary Results of Antidumping Duty Administrative Review

AGENCY: Import Administration, International Trade Administration, Department of Commerce.

ACTION: Notice of Preliminary Results of Antidumping Duty Administrative Review.

SUMMARY: In response to a request by petitioner and one respondent, the Department of Commerce (the Department) is conducting an administrative review of the antidumping duty order on certain welded carbon steel pipe and tube from Turkey(A–489–501). This review covers two manufacturers/exporters of the subject merchandise to the United States during the period of review (POR): May 1, 1993, through April 30, 1994.

We have preliminarily determined that sales have been made below the foreign market value (FMV) for Borusan. We preliminarily determine no dumping margin exists for Yucelboru during the POR. If these preliminary results are adopted in our final results of administrative review, we will instruct U.S. Customs to assess antidumping duties equal to the difference between the United States price (USP) and the FMV.

Interested parties are invited to comment on these preliminary results. Parties who submit argument in this proceeding are requested to submit with the argument: (1) A statement of the issue; and (2) a brief summary of the argument.

EFFECTIVE DATE: May 13, 1997.

FOR FURTHER INFORMATION CONTACT: Ilissa Kabak, Nancy Decker, Robin Gray or Linda Ludwig, Enforcement Group III–Office 8, Import Administration, International Trade Administration, U.S. Department of Commerce, 14th Street and Constitution Avenue, N.W., Room 7866, Washington, D.C. 20230; telephone (202) 482–0182 (Kabak), (202) 482–1324 (Decker), (202) 482–0196 (Gray), or (202) 482–3833 (Ludwig).

SUPPLEMENTARY INFORMATION:

Applicable Statute and Regulations

Unless otherwise indicated, all citations to the statute and to the Department's regulations are references to the provisions as they existed on December 31, 1994.

Background

The Department published an antidumping duty order on certain welded carbon steel pipe and tube from Turkey on May 15, 1986 (51 FR 17784). The Department published a notice of ''Opportunity to Request an Administrative Review'' of the antidumping duty order on May 4, 1994 (59 FR 23051). On May 31, 1994, the petitioners, Allied Tube & Conduit Corporation (''Allied'') and Wheatland Tube Co. (''Wheatland'') requested an administrative review of Borusan Group (''Borusan'') and all related entities (including, but not limited to, Borusan Holding A.S., Borusan Gemlik Boru Tesisleri A.S., Borusan Boru Sanayii A.S., Istikbal Ticaret A.S., Borusan Ihracat Ithalat ve Dagitim A.S., and Tubeco Pipe and Steel Corporation) and of Mannesmann-Sumerbank Boru Endustrisi T.A.S. (''Mannesmann''). On May 31, 1994, respondent Yucelboru Ihracat, Ithalat ve Pazarlama A.S. (''Yucelboru'') requested an administrative review. We initiated this review on June 15, 1994. *See* 59 FR 30770. On April 20, 1995, Mannesmann stated that they did not have any shipments during the POR.

The Department is conducting this administrative review in accordance with section 751 of the Act.

Scope of the Review

Imports covered by this review are shipments of certain welded carbon steel standard pipe and tube products with an outside diameter of 0.375 inch or more but not over 16 inches, of any wall thickness, currently classifiable under the following Harmonized Tariff Schedule (HTS) subheadings: 7306.3010.00, 7306.30.50.25, 7306.30.50.32, 7306.30.50.40, 7306.30.50.55, 7306.30.50.85, and 7306.30.50.90. These products commonly referred to in the industry as standard pipe and tube, are produced to various American Society for Testing and Materials (ASTM) specifications, most notably A–120, A–53 or A–135. These HTS item numbers are provided for convenience and customs purposes. The written descriptions remain dispositive.

The POR is May 1, 1993 through April 30, 1994. This review covers sales of certain welded carbon steel pipe and tube by Borusan and Yucelboru.

Verification

As provided in section 782(i)(3) of the Act, we verified information provided by the respondents using standard verification procedures, including on-site inspection of the manufacturer's

facilities, the examination of relevant sales, cost of production and financial records, and selection of original documentation containing relevant information. Our verification results are outlined in the public versions of the verification reports.

Product Comparisons

In accordance with section 771(16) of the Act, we considered each welded carbon steel pipe and tube product produced by Borusan or Yucelboru, covered by the descriptions in the ''Scope of the Review'' section of this notice, *supra*, and sold in the home market during the POR, to be a foreign like product for purposes of determining appropriate product comparisons to U.S. sales of certain welded carbon steel pipe and tube. For each of the products produced by Borusan or Yucelboru within the scope of the A–489–501 order, we examined the categories of merchandise listed in section 771 (16) of the Act for purposes of model matching. Where there were no sales of identical merchandise in the home market to compare to U.S. sales, we compared U.S. sales to the next most similar foreign like product on the basis of the characteristics listed in Appendix V of the Department's February 24, 1995 antidumping questionnaire. In making the product comparisons, we matched each foreign like product based on the physical characteristics and level of trade reported by the respondent. For Borusan, we determined that there is one U.S. level of trade and three home market levels of trade: wholesaler/distributor, retailer, end-user. Yucelboru had no level of trade distinctions in either market.

Where sales were made in the home market on a different weight basis from the U.S. market (e.g., theoretical versus actual weight), we converted all quantities to the same weight basis, using the conversion factors supplied by the company, before making our fair-value comparisons. We compared individual U.S. transactions to monthly weighted average FMVs.

Date of Sale

For Borusan, in the home market we treated the date of invoice, which is generally the same as the date of shipment, as the date of sale. In the United States, Borusan reported the date of the purchase order or sales contract, whenever the terms are firmly set, as date of the sale. Yucelboru reported date of invoice (which is also date of shipment) as the date of sale in both markets.

Fair Value Comparisons

To determine whether sales of pipe and tube to the United States were made at less than fair value, we compared the U.S. price to the FMV, as described in the ''United States Price'' and ''Foreign Market Value'' sections of this notice.

Turkey experienced a significant inflation rate of over 125 percent, as measured by the wholesale price index published in the *International Financial Statistics*, during the POR. In accordance with our practice, to avoid the distortions caused by the effects of this level of inflation on prices, we limited our comparisons to sales in the same month. *See Notice of Final Determination of Sales at Less Than Fair Value: Certain Steel Concrete Reinforcing Bars from Turkey, 62 FR 9737,9738 (March 4, 1997) (''Steel Bars'')*. When the rate of home market inflation is significant, as it is in this case, it is important that we use as a basis for FMV home market prices that are as contemporaneous as possible with the date of the U.S. sale. This is to minimize the extent to which calculated dumping margins are overstated or understated due solely to price inflation that occurred in the intervening time period between the U.S. and home market sales. For this reason, we have used the daily exchange rates for currency conversion purposes.

The Department's preferred source for daily exchange rates is the Federal Reserve Bank. However, the Federal Reserve Bank does not track or publish exchange rates for the Turkish lira. Therefore, we made currency conversions based on the daily exchange rates from the Dow Jones Service, as published in the Wall Street Journal. (*Steel Bars*, at 9741).

United States Price

All of Borusan's sales were based on the price to the first unrelated purchaser in the United States. The Department determined that purchase price, as defined in section 772 of the Tariff Act, was the appropriate basis for calculating USP. We made adjustments to purchase price, where appropriate, for foreign inland freight and insurance, international freight and charges, credit, and other direct selling expenses including bank commissions. We added the amount of countervailing duties related to export subsidies and the amount for duty drawback. Additionally, we deducted payments made by Borusan to its U.S. customers equal to the amount of countervailing duties. We disallowed Borusan's claimed value-added tax drawback because no statutory authority exists for such an adjustment.

All of Yucelboru's sales were based on the price to the first unrelated purchaser in the United States. The Department determined that purchase price, as defined in section 772 of the Tariff Act, was the appropriate basis for calculating USP. We made adjustments to purchase price, where appropriate, for foreign inland freight, foreign and U.S. brokerage and handling, ocean freight, and U.S. duties. We relied on Yucelboru's reported data except for foreign brokerage and handling, which was revised as a result of verification.

Foreign Market Value

For both Borusan and Yucelboru we determined that the home market was viable, based on a comparison of the volume of home market and third country sales. Therefore, in accordance with section 773(a)(1)(A) of the Tariff Act, we based FMV on the packed, delivered price to unrelated purchasers in the home market.

We made adjustments to FMV for differences in cost attributable to differences in physical characteristics of the merchandise, pursuant to section 773(a)(6)(C)(ii) of the Act.

Cost-of-Production Analysis

Petitioners alleged, on January 11, 1996, that Borusan sold certain welded carbon steel pipe and tube in the home market at prices below COP. Based on this allegation, in accordance with section 773(b) of the Act, the Department determined, on December 4, 1996, that it had reasonable grounds to believe or suspect that Borusan had sold the subject merchandise in the home market at prices below COP. *See* Letter to Dickstein, Shapiro, Morin & Oshinsky and Decision Memorandum (December 4, 1996). We therefore initiated a cost investigation with regard to Borusan in order to determine whether the respondent made home-market sales at prices below its COP within the meaning of section 773(b) of the Act.

We requested Yucelboru to respond to our cost questionnaire, dated February 24, 1995, in order to determine whether the respondent made home-market sales at prices below its COP within the meaning of section 773(b) of the Act.

In accordance with 19 CFR 353.51(c), we calculated COP for Borusan and Yucelboru as the sum of reported cost of manufacturing (COM) and general expenses. We compared COP to home market prices, net of price adjustments, discounts and rebates, and movement expenses.

In accordance with section 773(b) of the Tariff Act, in determining whether

to disregard home market sales made at prices below the COP, we examined whether such sales were made in substantial quantities over an extended period of time, and whether such sales were made at prices which permitted recovery of all costs within a reasonable period of time in the normal course of trade.

As noted above, we determined that the Turkish economy experienced significant inflation during the POR. Therefore, in order to avoid the distortive effect of inflation on our comparison of costs and prices, in accordance with our practice in such cases we requested that Borusan and Yucelboru submit monthly production costs incurred during each month of the POR. *Notice of Preliminary Results of Antidumping Duty Administrative Review: Certain Welded Carbon Steel Pipe and Tube from Turkey* (61 FR 35188, 35191 (July 5, 1996)). We used the companies' adjusted monthly COP amounts and the wholesale price index to calculate a weighted-average cost for each product for each company. The weighted-average COM was then restated in the currency value of each respective month and used to calculate monthly COP and CV for each product.

In accordance with our normal practice, for each model for which less than 10 percent, by quantity, of the home market sales during the POR were made at prices below COP, we included all sales of that model in the computation of FMV. For each model for which 10 percent or more, but less than 90 percent, of the home market sales during the POR were priced below COP, we excluded those sales priced below COP, provided that they were made over an extended period of time. For each model for which 90 percent or more of the home market sales during the POR were priced below COP and were made over an extended period of time, we disregarded all sales of that model in our calculation and, in accordance with section 773(b) of the Tariff Act, we used the constructed value (CV) of those models, as described below. *See, e.g., Mechanical Transfer Presses from Japan, Final Results of Antidumping Duty Administrative Review*, 59 FR 9958 (March 2, 1994).

In accordance with section 773(b)(1) of the Tariff Act, to determine whether sales below cost had been made over an extended period of time, we compared the number of months in which sales below cost occurred for a particular model to the number of months in which that model was sold. If the model was sold in fewer than three months, we did not disregard below-cost sales unless there were below-cost sales of that model in each month. If a model was sold in three or more months, we did not disregard below-cost sales unless there were sales below cost in at least three of the months. *See Tapered Roller Bearings and Parts Thereof, Finished and Unfinished, From Japan and Tapered Roller Bearings, Four Inches or Less in Outside Diameter, and Components Thereof, From Japan-Final Results of Antidumping Duty Administrative Reviews*, 58 FR 64720, 64729 (December 8, 1993).

Because Borusan and Yucelboru provided no indication that their below-cost sales of models within the ''greater than 90 percent'' and the ''between 10 and 90 percent'' categories were at prices that would permit recovery of all costs within a reasonable period of time and in the normal course of trade, we disregarded those sales of models within the ''10 to 90 percent'' category which were made below cost over an extended period of time. In addition, as a result of our COP test for home market sales of models within the ''greater than 90 percent'' category, we based FMV on CV for all U.S. sales for which more than 90 percent of sales of the comparison home market model occurred below COP. Finally, where we found, for certain of Borusan's and Yucelboru's models, home market sales for which less than 10 percent were made below COP, we used all home market sales of these models in our comparisons.

We also used CV as FMV for those U.S. sales for which there was no sale of such or similar merchandise in the home market. In accordance with section 773(e) of the Tariff Act, we calculated CV as the sum of the COM, general expenses and profit. Where the general expenses were less than the statutory minimum of 10 percent of COM, we calculated general expenses as 10 percent of the COM. Where the actual profits were less than the statutory minimum of 8 percent of the COM plus general expenses, we calculated profit as 8 percent of the sum of COM plus general expenses.

Based on our verification of Yucelboru's cost response, we adjusted Yucelboru's reported COP and CV to reflect certain adjustments to general and administrative expenses, indirect selling expenses, and interest expenses. Based on our verification of Borusan's cost response, we adjusted Borusan's reported COP and CV to reflect certain adjustments to general and administrative expenses and interest expenses.

In accordance with section 773 of the Tariff Act, for Borusan's U.S. models for which we were able to find a home market such or similar match that had sufficient above-cost sales, we calculated FMV based on the packed, F.O.B., ex-factory, or delivered prices to unrelated purchasers in the home market or prices to affiliated customers which were determined to be at arm's length (*See* discussion below regarding these sales). We made adjustments, where applicable, for inland freight, pre-sale warehouse expense, discounts and rebates, post-sale inland freight and for home market direct expenses. We added collection of late payment charges. We also adjusted FMV for differences in circumstances of sale, including physical characteristics, direct selling expenses, credit, advertising, warranty, packing costs, and the Turkish value added tax. Where merchandise exported to the United States is exempt from home market consumption tax, in comparing FMV to USP, we added to U.S. price the absolute amount of such taxes charged on the comparison sales in the home market.

For Yucelboru's U.S. models for which we were able to find a home market such or similar match that had sufficient above-cost sales, we calculated FMV based on the packed, F.O.B., ex-factory, or delivered prices to unrelated purchasers in the home market. We made adjustments, where applicable, for discounts and rebates. We disallowed Yucelboru's claimed credit adjustment (*See* the Department's April 15, 1997, Analysis Memorandum). We also adjusted FMV for differences in circumstances of sale, including physical characteristics, packing costs, and the Turkish value added tax. Where merchandise exported to the United States is exempt from home market consumption tax, in comparing FMV to USP, we added to U.S. price the absolute amount of such taxes charged on the comparison sales in the home market.

In calculating for physical differences in merchandise we calculated simple average variable and total costs of manufacturing by product after indexing the reported monthly costs using the wholesale price index for Turkey. We then indexed the average variable and total costs of manufacturing to restate them in the currency value of each respective month. The adjusted monthly variable costs of manufacturing for U.S. and home market products were then compared to arrive at the difference in merchandise adjustment.

To determine whether Borusan and Yucelboru's sales were made at arm's length, we compared the gross unit prices of sales to related and unrelated customers net of all movement charges, direct and indirect selling expenses, and

packing (*See Final Determination of Sales at Less Than Fair Value: Certain Cold-Rolled Carbon Steel Flat Products from Argentina* (58 FR 37062, 37077, July 9, 1993)). We included those sales that passed the arm's length test in our analysis (see 19 CFR 353.45(a)).

Reimbursement

Section 353.26 of the regulations states that ''[I]n calculating the United States price, the Secretary will deduct the amount of any antidumping duty which the producer or reseller: (i) Paid directly on behalf of the importer; or (ii) reimbursed to the importer.'' The Statement of Administrative Action of the Uruguay Round Agreements Act, in addressing the issue of reimbursement, states that ''[C]ommerce has the full authority under its current regulations (19 CFR 353.26) to increase the duty when an exporter directly pays the duties due, or reimburses the importer, whether independent or affiliated, for the importer's payment of duties.'' In *Color Television Receivers from the Republic of Korea: Final Results of Antidumping Duty Administrative Reviews*, 61 FR 4408, 4410 (February 6, 1996), Commerce stated the following:

> In effect, antidumping duties raise prices of subject merchandise to importers, thereby providing a level playing field upon which injured U.S. industries can compete. The remedial effect of the law is defeated, however, where exporters themselves pay antidumping duties, or reimburse importers for such duties.

Since we found no evidence that the conditions mentioned above exist with respect to these companies, we did not apply § 353.26 of our regulations.

Preliminary Results of Review

As a result of our comparison of USP to FMV we preliminarily determine that the following margin exists:

CERTAIN WELDED CARBON STEEL PIPE AND TUBE FROM TURKEY

Producer/manufacturer/exporter	Weighted-average margin
Borusan	8.55%
Yucelboru	0%

Interested parties may request disclosure within 5 days of the date of publication of this notice and may request a hearing within 10 days of publication. Any hearing, if requested, will be held 44 days after the date of publication or the first business day thereafter. Case briefs and/or written comments from interested parties may be submitted no later than 30 days after the date of publication. Rebuttal briefs and rebuttals to written comments, limited to issues raised in those comments, may be filed not later than 37 days after the date of publication of this notice. The Department will publish the final results of these administrative reviews including the results of its analysis of issues raised in any such written comments or at a hearing.

The Department shall determine, and the Customs Service shall assess, antidumping duties on all appropriate entries. Individual differences between the USP and FMV may vary from the percentages stated above.

Furthermore, the following deposit requirements will be effective for all of Yucelboru's shipments of the subject merchandise entered, or withdrawn from warehouse, for consumption on or after the publication date of the final results of this administrative review, as provided for by section 751(a)(1) of the Tariff Act. A cash deposit of estimated antidumping duties shall be required on shipments of review of the antidumping duty order on certain welded carbon steel pipe and tube from Turkey as follows: (1) The cash deposit rate for Yucelboru will be the rate established in the final results of this review; (2) for Borusan and previously reviewed or investigated companies not listed above, the cash deposit rate will continue to be the company-specific rate published for the most recent period; (3) if the exporter is not a firm covered in this review, or the original LTFV investigation, but the manufacturer is, the cash deposit rate will be the rate established for the most recent period for the manufacturer of the merchandise; and (4) if neither the exporter nor the manufacturer is a firm covered in this review, the cash deposit rate will be 14.74 percent. This is the ''all others'' rate from the LTFV investigation. *See Antidumping Duty Order; Welded Carbon Steel Standard Pipe and Tube from Turkey*, 51 FR 17784 (May 15, 1986).

This notice also serves as a preliminary reminder to importers of their responsibility under 19 CFR 353.26 to file a certificate regarding the reimbursement of antidumping duties prior to liquidation of the relevant entries during this review period. Failure to comply with this requirement could result in the Department's presumption that reimbursement of antidumping duties occurred and the subsequent assessment of double antidumping duties.

This administrative review and this notice are in accordance with section 751(a)(1) of the Tariff Act (19 U.S.C. 1675(a)(1)) and 19 CFR 353.22.

Dated: May 5, 1997.

Robert S. LaRussa,

Acting Assistant Secretary for Import Administration.

[FR Doc. 97–12507 Filed 5–12–97; 8:45 am]

BILLING CODE 3510–DS–P

DEPARTMENT OF COMMERCE

International Trade Administration

[C–557–806]

Extruded Rubber Thread from Malaysia; Preliminary Results of Countervailing Duty Administrative Review

AGENCY: Import Administration, International Trade Administration, Department of Commerce.

ACTION: Notice of preliminary results of Countervailing Duty Administrative Review.

SUMMARY: The Department of Commerce (''the Department'') is conducting an administrative review of the countervailing duty order on extruded rubber thread from Malaysia. For information on the net subsidy for each reviewed company, as well for all non-reviewed companies, *see* the Preliminary Results of Review section of this notice. If the final results remain the same as these preliminary results of administrative review, we will instruct the U.S. Customs Service (''Customs'') to collect cash deposits of countervailing duties as detailed in the Preliminary Results of Review section of this notice. Interested parties are invited to comment on these preliminary results. (See Public Comment section of this notice.)

EFFECTIVE DATE: May 13, 1997.

FOR FURTHER INFORMATION CONTACT: Judy Kornfeld or Richard Herring, Office of CVD/AD Enforcement VI, Import Administration, International Trade Administration, U.S. Department of Commerce, 14th Street and Constitution Avenue, N.W., Washington, D.C. 20230; telephone: (202) 482–3146 or (202) 482–2786.

SUPPLEMENTARY INFORMATION:

Background

On August 25, 1992, the Department published in the **Federal Register** (57 FR 38472) the countervailing duty order on extruded rubber thread from Malaysia. On August 12, 1996, the Department published a notice of ''Opportunity to Request Administrative Review'' (61 FR 41768) of this countervailing duty order. We received a timely request for review, and we

initiated the review, covering the period January 1, 1995 through December 31, 1995, on September 17, 1996 (61 FR 48882).

In accordance with 19 C.F.R. 355.22(a), this review covers only those producers or exporters of the subject merchandise for which a review was specifically requested. Accordingly, this review covers Heveafil Sdn. Bhd., Filmax Sdn. Bhd., Rubberflex Sdn. Bhd., Filati Lastex Elastofibre Sdn. Bhd. (Filati), and Rubfil Sdn. Bhd. Heveafil and Filmax are affiliated parties. (See Affiliated Parties section below.) This review also covers 13 programs.

Applicable Statute

Unless otherwise indicated, all citations to the statute are references to the provisions of the Tariff Act of 1930, as amended by the Uruguay Round Agreements Act (''URAA'') effective January 1, 1995 (''the Act''). The Department is conducting this administrative review in accordance with section 751(a) of the Act.

Scope of the Review

Imports covered by this review are shipments of extruded rubber thread from Malaysia. Extruded rubber thread is defined as vulcanized rubber thread obtained by extrusion of stable or concentrated natural latex of any cross sectional shape; measuring from 0.18 mm, which is 0.007 inch or 140 gauge, to 1.42 mm, which is 0.056 inch or 18 gauge, in diameter. Such merchandise is classifiable under item number 4007.00.00 of the Harmonized Tariff Schedule (HTS). The HTS item number is provided for convenience and Customs purposes. The written description is dispositive.

Affiliated Parties

Heveafil owns and controls Filmax and both companies produce subject merchandise. Therefore, we determine them to be affiliated companies under section 771(33) of the Act and, consistent with prior reviews of this order, we have calculated a single rate applicable to both of these companies. *See Extruded Rubber Thread From Malaysia; Final Results of Countervailing Duty Administrative Review* (61 FR 55272; October 25, 1996) (*Malaysian Rubber Thread 1994 Review*). For further information, *see Memorandum to File from Judy Kornfeld Regarding Status as Affiliated Parties* dated March 28, 1997, on file in the public file of the Central Records Unit, Room B–099 of the Department of Commerce.

Analysis of Programs

I. Programs Conferring Subsidies

A. Programs Previously Determined to Confer Subsidies

1. *Export Credit Refinancing (ECR) Program*

The ECR program was established in order to promote: (1) Exports of manufactured goods and agricultural food products that have significant value-added and high local content, (2) greater domestic linkages in export industries, and (3) easy access to credit facilities. In order to accomplish this, the Bank Negara Malaysia, the central bank of Malaysia, provides order-based, and pre- and post-shipment financing of exports through commercial banks for periods of up to 120 and 180 days, respectively, and certificate of performance (CP)—based pre-shipment financing. These loans are provided in Malaysian Ringgits. Order-based financing is provided for specific sales to specific markets. CP-based financing is a line of credit based on the previous 12 months' export performance, and cannot be tied to specific sales in specific markets.

The Department determined that this program was an export subsidy in *Final Affirmative Countervailing Duty Determination and Countervailing Duty Order; Extruded Rubber Thread From Malaysia* (57 FR 38472; August 25, 1992) (*Malaysian Rubber Thread Final Determination*) because receipt of loans under this program was contingent upon export performance. No new information or evidence of changed circumstances has been submitted in this proceeding to warrant reconsideration of this finding. During the period of review (POR), Heveafil, Filmax, Rubberflex and Rubfil used ECR pre-shipment loans; Rubfil and Filati used ECR post-shipment loans.

Section 771(5)(E)(ii) of the Act states that, in the case of a loan, if there is a difference between the amount the recipient of the loan pays on the loan and the amount the recipient would pay on a comparable commercial loan that the recipient could actually obtain on the market, then a countervailable benefit is bestowed. In this case, as the benchmark interest rates, we are using company-specific interest rates on comparable commercial loans to determine whether there is a benefit from the ECR pre-shipment and post-shipment loans.

With respect to ECR post-shipment loans, we preliminarily determine that Banker's Acceptances (BAs) are a comparable form of alternative short-term commercial financing because both BAs and ECR post-shipment loans are short-term borrowing instruments used to finance specified export shipments. Therefore, as the benchmark for ECR post-shipment loans to Filati and Rubfil, we used each company's average effective BA rate, inclusive of the cost of commissions for the BA, for all BA loans taken out during the POR.

BAs, however, are not comparable to ECR pre-shipment loans. The ECR pre-shipment financing used by the respondents is based on a line of credit, much like a general short-term loan in the Malaysian market. We determined in the *Malaysian Rubber Thread 1994 Review* that term loans and overdrafts offered by commercial banks are comparable forms of short-term financing in Malaysia. During the POR, respondents used revolving lines of credit and overdrafts for short-term commercial financing. Therefore, we have used as our benchmark for ECR pre-shipment loans that were taken out by Heveafil, Filmax, Rubfil or Rubberflex, the average of the commercial bank lending rates charged to each company during the POR for revolving lines of credit and overdrafts.

Using these benchmarks, we continue to find these loans countervailable (except for the ECR post-shipment loans received by Rubfil because the interest rate charged is equal to or greater than the benchmark rate) because the interest rate charged is less than the rate for comparable commercial loans that the company could actually obtain in the market. To calculate the benefit from ECR loans on which interest was paid in 1995, we used our short-term loan methodology which has been applied consistently in previous determinations. (*See, e.g., Certain Iron-Metal Castings from India; Preliminary Results of Countervailing Duty Administrative Review* (61 FR 64669; December 6, 1996). Because the ECR post-shipment loans are shipment-specific, we included in our calculations only those loans approved to finance or taken out to finance export shipments of extruded rubber thread to the United States. Because the pre-shipment loans are not tied to specific shipments, we included all loans on which interest was paid during the POR.

To determine the benefit, we compared the amount of interest actually paid on these loans during the POR with the amount that would have been paid at each benchmark rate for pre-shipment financing and post-shipment financing. The difference between those amounts is the benefit. We then divided each company's interest savings by total exports, in the case of pre-shipment loans, because

they applied to all exports, or by exports to the United States, in the case of post-shipment loans, because they applied to specific shipments of exports to the United States. On this basis, we preliminarily determine the *ad valorem* subsidy from pre-shipment loans to be the following for each of the reviewed companies:

Net subsidies—producer/exporter	Subsidy rate (percent)
Heveafil/Filmax	0.15
Rubberflex	.30
Filati	.00
Rubfil	.03

For post-shipment loans, we preliminarily determine the *ad valorem* subsidy to be the following for each of the reviewed companies:

Net subsidies—producer/exporter	Subsidy rate (percent)
Heveafil/Filmax	0.00
Rubberflex	.00
Filati	.15
Rubfil	.00

2. *Pioneer Status*

Pioneer status is a tax incentive offered to promote investment in the manufacturing, tourist, and agricultural sectors. Pioneer status was first introduced under the Pioneer Industries (Relief from Income Tax) Ordinance, 1958. This ordinance was replaced by the Investment Incentives Act (IIA) in 1968, which was subsequently replaced by the Promotion of Investment Act (PIA) of 1986. Under the IIA and the PIA, the Minister of International Trade and Industry may determine products or activities to be pioneer products or activities.

Companies petition for pioneer status for products or activities that have already been approved and listed as pioneer products. Once a company receives pioneer status, its profits from the designated product or activity are exempt from the corporate income tax for a period of five years, with the possibility of an extension for an additional five years. The five-year extension was abolished for companies which applied for pioneer status on or after November 1991. Further, the computation of capital allowances, which are normally deducted against the adjusted taxable income, is postponed to the post-tax holiday period.

Under certain conditions, companies must agree to an export commitment (*i.e.*, they must agree to export a certain percentage of their production) to receive pioneer status. Furthermore, an export requirement may sometimes be applied to certain industries after it is determined that the domestic market is saturated and will no longer support additional producers.

In the investigation of this case (*see Malaysian Rubber Thread Final Determination*), we determined that pioneer status was granted to Rubberflex based on its obligation to export. Therefore, we found that the program constitutes an export subsidy with respect to that company. In addition, in past administrative reviews, we reviewed the pioneer status of Filati, Filmax and Rubfil and found the program countervailable with respect to all of these companies because pioneer status was granted to each based on a commitment that they would export a majority of their production. *See Extruded Rubber Thread from Malaysia; Final Results of Countervailing Duty Administrative Review* (60 FR 17515; April 6, 1995). *See also Malaysian Rubber Thread 1994 Review*. No new information or evidence of changed circumstances has been submitted in this proceeding to warrant reconsideration of these findings. Rubberflex, Filati, Filmax and Rubfil continued to hold pioneer status during the POR, but only Rubberflex and Filmax claimed pioneer income on the income tax return filed during the POR. Filati did not file a tax return during the POR and Rubfil reported a loss on the tax return filed during the POR. Therefore, these two companies did not use this program.

To calculate the benefit to Rubberflex and Filmax, we calculated the amount of tax that would have been paid absent the program and compared that to the amount of tax actually paid. The difference equals the tax savings received by each company. Dividing the tax savings by total exports, we preliminarily determine the *ad valorem* subsidy from this program to be the following for each of the reviewed companies:

Net subsidies—producer/exporter	Subsidy rate (percent)
Heveafil/Filmax	0.74
Rubberflex	.77
Filati	.00
Rubfil	.00

3. *Industrial Building Allowance*

Sections 63 through 66 of the Income Tax Act of 1967, as amended, allow an income tax deduction for a percentage of the value of constructed or purchased buildings used in manufacturing. In 1984, this allowance, which had been limited to manufacturing facilities, was extended to include buildings used as warehouses to store finished goods ready for export or imported inputs to be incorporated into exported goods. This program includes a 10 percent initial and a 2 percent annual tax allowance (*i.e.*, 12 percent in the first year and 2 percent thereafter). The program effectively reduces a company's taxable income, and the tax allowance can be carried forward to future tax years until fully exhausted. Rubber-based exporters are eligible for this program. We found this program countervailable in the *Malaysian Rubber Thread Final Determination* because use of this allowance is limited to exporters. No new information or evidence of changed circumstances has been submitted in this proceeding to warrant reconsideration of this program's countervailability.

Heveafil claimed allowances under this program on the tax return filed during the POR. To determine the benefit, we calculated the tax savings from this program during the review period for Heveafil and divided the savings amount by Heveafil/Filmax's total exports, because these benefits applied to all exports. On this basis, we preliminarily determine the *ad valorem* subsidy from this program to be the following for each of the reviewed companies:

Net subsidies—producer/exporter	Subsidy rate (percent)
Heveafil/Filmax	Less than 0.005.
Rubberflex	0.00.
Filati	0.00.
Rubfil	0.00.

4. *Double Deduction for Export Promotion Expenses*

Section 41 of the Promotion of Investments Act allows companies to deduct expenses related to the promotion of exports twice, once in calculating net income on the financial statement and again in calculating taxable income. We found this program countervailable in the *Malaysian Rubber Thread Final Determination* because its use is limited to exporters. No new information or evidence of changed circumstances has been submitted in this proceeding to warrant reconsideration of this finding.

Heveafil claimed deductions under this program on the tax return filed during the POR. To determine the benefit, we calculated the tax savings

from this program during the review period for this company and divided those savings by Heveafil/Filmax's total exports, because these benefits applied to all exports. On this basis, we preliminarily determine the *ad valorem* subsidy from this program to be the following for each of the reviewed companies:

Net subsidies—producer/exporter	Subsidy rate (percent)
Heveafil/Filmax	0.01
Rubberflex	0.00
Filati	0.00
Rubfil	0.00

II. Programs Preliminarily Determined to be Not Used

We examined the following programs and preliminarily determine that the producers and/or exporters of the subject merchandise did not apply for or receive benefits under these programs during the period of review:

- Investment Tax Allowance,
- Abatement of a Percentage of Net Taxable Income Based on the F.O.B. Value of Export Sales,
- Abatement of Five Percent of Taxable Income Due to Location in a Promoted Industrial Area,
- Abatement of Taxable Income of Five Percent of Adjusted Income of Companies due to Capital Participation and Employment Policy Adherence,
- Double Deduction of Export Credit Insurance Payments, and
- Preferential Financing for Bumiputras.

Preliminary Results of Review

In accordance with 19 C.F.R. § 355.22(c)(4)(ii), we calculated an individual subsidy rate for each producer/exporter subject to this administrative review. For the period January 1, 1995 through December 31, 1995, we preliminarily determine the subsidy for the following companies to be:

Net subsidies—producer/exporter	Net subsidy rate (percent)
Heveafil/Filmax	0.90
Rubberflex	1.07
Rubfil	0.03
Filati	0.15

If the final results of this review remain the same as these preliminary results, the Department intends to instruct Customs to collect cash deposits as indicated above.

This countervailing duty order was determined to be subject to section 753 of the Act. *Countervailing Duty Order; Opportunity to Request a Section 753 Injury Investigation,* 60 FR 27,963 (May 26, 1995), amended 60 FR 32,942 (June 26, 1995). In accordance with section 753(a), domestic interested parties have requested an injury investigation with respect to this order with the International Trade Commission (ITC). Pursuant to section 753(a)(4), liquidation of entries of subject merchandise made on or after January 1, 1995, the date Malaysia joined the World Trade Organization (WTO), is suspended until the ITC issues a final injury determination. Therefore, we will not issue assessment instructions for any entries made on or after January 1, 1995; however, we will instruct Customs to collect cash deposits in accordance with the final results of this administrative review. As provided for in the Act, any rate less than 0.5 percent *ad valorem* in an administrative review is *de minimis.* Accordingly, for those companies with *de minimis* rates, no cash deposits will be required.

Because the URAA replaced the general rule in favor of a country-wide rate with a general rule in favor of individual rates for investigated and reviewed companies, the procedures for establishing countervailing duty rates, including those for non-reviewed companies, are now essentially the same as those in antidumping cases, except as provided for in section 777A(e)(2)(B) of the Act. The requested review will normally cover only those companies specifically named. *See* 19 C.F.R. § 355.22(a). Pursuant to 19 C.F.R. § 355.22(g), for all companies for which a review was *not* requested, duties must be assessed at the cash deposit rate, and cash deposits must continue to be collected, at the rate previously ordered. As such, the countervailing duty cash deposit rate applicable to a company can no longer change, except pursuant to a request for a review of that company. *See Federal-Mogul Corporation and The Torrington Company* v. *United States,* 822 F.Supp. 782 (CIT 1993) and *Floral Trade Council* v. *United States,* 822 F.Supp. 766 (CIT 1993) (interpreting 19 C.F.R. § 353.22(e), the antidumping regulation on automatic assessment, which is identical to 19 C.F.R. § 355.22(g)). Therefore, the cash deposit rates for all companies except those covered by this review will be unchanged by the results of this review. However, as noted above, pursuant to section 753(a)(4), we will not issue assessment instructions for these unreviewed companies, unless and until the ITC issues a final injury determination.

Public Comment

Parties to the proceeding may request disclosure of the calculation methodology and interested parties may request a hearing not later than 10 days after the date of publication of this notice. Interested parties may submit written arguments in case briefs on these preliminary results within 30 days of the date of publication. Rebuttal briefs, limited to arguments raised in case briefs, may be submitted seven days after the time limit for filing the case brief. Parties who submit argument in this proceeding are requested to submit with the argument (1) A statement of the issue and (2) a brief summary of the argument. Any hearing, if requested, will be held seven days after the scheduled date for submission of rebuttal briefs. Copies of case briefs and rebuttal briefs must be served on interested parties in accordance with 19 C.F.R. § 355.38.

Representatives of parties to the proceeding may request disclosure of proprietary information under administrative protective order no later than 10 days after the representative's client or employer becomes a party to the proceeding, but in no event later than the date the case briefs, under 19 C.F.R. § 355.38, are due. The Department will publish the final results of this administrative review, including the results of its analysis of issues raised in any case or rebuttal brief or at a hearing.

This administrative review and notice are in accordance with section 751(a)(1) of the Act (19 U.S.C. 1675(a)(1)).

Dated: May 5, 1997.

Robert S. LaRussa,

Acting Assistant Secretary for Import Administration.

[FR Doc. 97–12509 Filed 5–12–97; 8:45 am]

BILLING CODE 3510–DS–P

DEPARTMENT OF COMMERCE

International Trade Administration

Determination Not to Revoke Countervailing Duty Orders

AGENCY: Import Administration, International Trade Administration, Department of Commerce.

ACTION: Notice of determination not to revoke Countervailing Duty Order.

SUMMARY: The Department of Commerce (the Department) is notifying the public of its determination not to revoke the countervailing duty orders listed below.

EFFECTIVE DATE: May 13, 1997.

FOR FURTHER INFORMATION CONTACT:

Russell Morris or Maria MacKay, Office of CVD/AD Enforcement VI, Import Administration, International Trade Administration, U.S. Department of Commerce, 14th Street and Constitution Avenue, N.W., Washington, D.C. 20230; telephone: (202) 482–2786.

SUPPLEMENTARY INFORMATION:

Background

On February 27, 1997, the Department published in the **Federal Register** (62 FR 8929) its intent to revoke the following countervailing duty orders:

Countervailing duty orders	
Chile: Standard Carnations (C–337–601).	03/19/87, 52FR 8635.
France: Brass Sheet and Strip (C–427–603).	03/06/87, 52FR 6996.
Iran: Raw Pistachios (C–507–501).	03/11/86, 51FR 8344.
Israel: Oil Country Tubular Goods (C–508–601).	03/06/87, 52FR 6999.

Under 19 CFR 355.25(d)(4)(iii), the Secretary of Commerce will conclude that an order is no longer of interest to interested parties and will revoke the order if no domestic interested party (as defined in sections 355.2 (i)(3), (i)(4), (i)(5), and (i)(6) of the regulations) objects to revocation or no interested party requests an administrative review by the last day of the 5th anniversary month.

Within the specified time frame, we received objections from domestic interested parties to our intent to revoke these countervailing duty orders. Therefore, because the requirements of 19 CFR 355.25(d)(4)(iii) have not been met, we will not revoke these orders.

This determination is in accordance with 19 CFR 355.25(d)(4).

Dated: May 5, 1997.

Jeffrey P. Bialos,

Principal Deputy Assistant Secretary for Import Administration.

[FR Doc. 97–12510 Filed 5–12–97; 8:45 am]

BILLING CODE 3510–DS–M

DEPARTMENT OF COMMERCE

National Institute of Standards and Technology

[Docket No. 960924273–6273–01]

RIN 0693–2A11

Announcing Plans to Revise Federal Information Processing Standard 186, Digital Signature Standard

AGENCY: National Institute of Standards and Technology (NIST), Commerce.

ACTION: Notice; request for comments.

SUMMARY: NIST is planning to develop a proposed revision to Federal Information Processing Standard 186, Digital Signature Standard. This revision would specify additional public-key based digital signature algorithms (in addition to the Digital Signature Algorithm [DSA]) for use in designing and implementing public-key based signature systems which Federal departments and agencies operate or which are operated for them under contract. The purpose of the revision will be to enable Federal departments and agencies greater flexibility, consistent with sound security practices, in the design, implementation, and use of public-key based digital signature systems.

DATES: Comments should be received on or before August 11, 1997.

ADDRESSES: Written comments should be sent to: Director, Information Technology Laboratory, ATTN: Planned Revision to FIPS 186, Technology Building, Room A231, National Institute of Standards and Technology, Gaithersburg, MD 20899.

Electronic comments should be sent to: FIPS186@NIST.GOV

Comments are particularly sought with respect to the RSA and elliptic curve techniques. In addition, parties believing their patents or other intellectual property pertain to either of these techniques are asked to comment and provide specifics of the nature of their claims.

Comments received in response to this notice will be made part of the public record and will be made available for inspection and copying in the Central Reference and Records Inspection Facility, Room 6020, Herbert C. Hoover Building, 14th Street between Pennsylvania and Constitution Avenues, NW., Washington, DC 20230.

FOR FURTHER INFORMATION CONTACT: Edward Roback, Computer Security Division, National Institute of Standards and Technology, Gaithersburg, MD 20899, telephone (301) 975–3696. The current FIPS 186 and change notice is available at http://csrc.nist.gov/fips/fips186.txt. Interested parties may obtain copies of the current FIPS 186 and change notice from the National Technical Information Service, U.S. Department of Commerce, Springfield, VA 22161, telephone (703) 487–4650, e-mail orders@NTIS.fedworld.gov.

SUPPLEMENTARY INFORMATION: NIST is planning to develop a proposed revision to Federal Information Processing Standard 186, Digital Signature Standard, to specify additional public-key based digital signature algorithms (in addition to the Digital Signature Algorithm [DSA]) for incorporation into FIPS 186. These algorithms could then be used in designing and implementing public-key based signature systems which Federal departments and agencies operate or which are operated for them under contract. The purpose of the revision will be to enable Federal departments and agencies greater flexibility, consistent with sound security practices, in the design, implementation, and use of public-key based signature systems.

Other algorithms approved for inclusion shall be either: (1) Freely available or (2) available under terms consistent with the American National Standards Institute (ANSI) patent policy.

The Administration policy is that cryptographic keys used by Federal agencies for encryption (i.e., to protect the confidentiality of information) shall be recoverable through an agency or third-party process and that keys used for digital signature (i.e., for integrity and authentication of information) shall not be recoverable. Agencies must be able to ensure that signature keys cannot be used for encryption. Any algorithms proposed for digital signature must be able to be implemented such that they do not support encryption unless keys used for encryption are distinct from those used for signature and are recoverable.

The distinction between signature and encryption keys will be facilitated in the public key infrastructure by using X.509v3 public key certificates.

NIST solicits comments from interested parties, including industry, voluntary standards organizations, the public, and State and local governments concerning developing such a proposed revision, and concerning the availability, security, and adequacy of existing industry standards, de facto or otherwise, for public key-based digital signature systems.

This work is pursuant to NIST's responsibilities under the Computer Security Act of 1987, the Information

Technology Management Reform Act of 1996, OMB Circular A–130, and Executive Order 13011.

Dated: May 6, 1997.

Elaine Bunten-Mines,

Director, Program Office.

[FR Doc. 97–12341 Filed 5–12–97; 8:45 am]

BILLING CODE 3510–CN–M

DEPARTMENT OF COMMERCE

National Institute of Standards and Technology

[Docket No. 960924271–6271–01]

RIN 0693–ZA10

Announcing Plans to Develop a Federal Information Processing Standard for Public-Key Based Cryptographic Key Agreement and Exchange

AGENCY: National Institute of Standards and Technology (NIST), Commerce.

ACTION: Notice; request for comments.

SUMMARY: NIST is planning to develop a Federal Information Processing Standard for Public-Key Based Cryptographic Key Agreement and Exchange. This notice solicits comments regarding techniques for consideration specifically including RSA, Diffie-Hellman, and Elliptic Curve techniques. This standard will be for use in designing and implementing public-key based key agreement and exchange systems which Federal departments and agencies operate or which are operated for them under contract. More than one algorithm may be specified, consistent with sound security practices, to enable Federal departments and agencies enhanced flexibility in the design, implementation, and use of cryptographic systems.

DATES: Comments should be received on or before August 11, 1997.

ADDRESSES: Written comments should be sent to: Director, Information Technology Laboratory, ATTN: Key Agreement/Exchange FIPS, Technology Building, Room A231, National Institute of Standards and Technology, Gaithersburg, MD 20899.

Electronic comments should be sent to: KEYEX@NIST.GOV

Comments received in response to this notice will be made part of the public record and will be made available for inspection and copying in the Central Reference and Records Inspection Facility, Room 6020, Herbert C. Hoover Building, 14th Street between Pennsylvania and Constitution Avenues, NW, Washington, DC 20230.

FOR FURTHER INFORMATION CONTACT: Miles Smid, Manager, Security Technology Group, Computer Security Division, National Institute of Standards and Technology, Gaithersburg, MD 20899, telephone (301) 975–2938.

SUPPLEMENTARY INFORMATION: NIST is planning to develop a Federal Information Processing Standard for Public-Key Based Cryptographic Key Agreement and Exchange. This standard will be for use in designing and implementing public-key based key agreement and exchange systems which Federal departments and agencies operate or which are operated for them under contract. More than one algorithm may be specified in the standard, consistent with sound security practices, to enable Federal departments and agencies enhanced flexibility in the design, implementation, and use of cryptographic systems.

Algorithms approved for inclusion shall be either: (1) Freely available or (2) available under terms consistent with the American National Standards Institute (ANSI) patent policy.

The Administration policy is that cryptographic keys used by Federal agencies for encryption (i.e., to protect the confidentiality of information) shall be recoverable through an agency or third-party process and that keys used for digital signature (i.e., for integrity and authentication of information) shall not be recoverable. Agencies must be able to ensure that signature keys cannot be used for encryption. Any algorithms proposed for digital signature must be able to be implemented such that they do not support encryption unless keys used for encryption are distinct from those used for signature and are recoverable.

The distinction between signature and encryption keys will be facilitated in the public key infrastructure by using X.509v3 public key certificates.

This standard would specify the mathematical algorithm(s) approved for use by Federal agencies for using public key cryptographic key exchange/agreement (e.g., to exchange the encryption key[s] used by two parties for data encryption). This standard will be complemented by the activities of the ''Technical Advisory Committee to Develop a Federal Information Processing Standard for Federal Key Management Infrastructure,'' which is working on recommendations for a federal standard on encryption key recovery (independent of the underlying mathematical algorithm[s] used to exchange the encryption key[s]).

NIST solicits comments from interested parties, including industry, voluntary standards organizations, the public, and State and local governments concerning developing such a standard, and concerning the availability, security, and adequacy of existing standards for public key-based key agreement and exchange.

Comments are particularly sought with respect to the RSA, Diffie-Hellman, and elliptic curve techniques. In addition, parties believing their patents or other intellectual property pertain to any of these three techniques are asked to comment and provide specifics of the nature of their claims.

This work is pursuant to NIST's responsibilities under the Computer Security Act of 1987, the Information Technology Management Reform Act of 1996, OMB Circular A–130, and Executive Order 13011.

Dated: May 6, 1997.

Elaine Bunten-Mines,

Director, Program Office.

[FR Doc. 97–12340 Filed 5–12–97; 8:45 am]

BILLING CODE 3510–CN–M

CORPORATION FOR NATIONAL AND COMMUNITY SERVICE

Foster Grandparent and Senior Companion Programs; Income Eligibility Levels

AGENCY: Corporation for National and Community Service.

ACTION: Revision of income eligibility levels.

SUMMARY: This Notice revises the schedules of income eligibility levels for participation in the Foster Grandparent Program (FGP) and the Senior Companion Program (SCP) of the Corporation for National and Community Service (Corporation) published in 61 FR 14558 on April 2, 1996.

DATES: These guidelines go into effect May 13, 1997.

FOR FURTHER INFORMATION CONTACT: Ruth Archie, National Senior Service Corps, Corporation for National and Community Service, 1201 New York Avenue NW, Washington, DC 20525, or by telephone at (202) 606–5000 ext. 289.

SUPPLEMENTARY INFORMATION: The revised schedules are based on changes in the Poverty Guidelines issued by the Department of Health and Human Services (DHHS) published in 62 FR 10856, March 10, 1997. In accordance with program regulations, the income eligibility level for each State and the District of Columbia is 125 percent of the DHHS Poverty Guidelines, except in those areas determined by the Corporation to be of a higher cost of living. In such instances, the income

elibility levels shall be 135 percent of the DHHS Poverty Guidelines. The level of eligibility is rounded to the next highest multiple of $5.00.

In determining income eligibility, consideration should be given to the following definitions set forth in 59 FR 15120, March 31, 1994:

Allowable medical expenses are annual out-of-pocket expenses for health insurance premiums, health care services, and medications provided to the applicant, enrollee, or spouse and were not and will not be paid for by Medicare, Medicaid, other insurance, or by any other third party and, shall not exceed 15 percent of the applicable Corporation income guideline.

Annual income is counted for the past 12 months and includes: The applicant or enrollee's income and the applicant or enrollee's spouse's income, if the spouse lives in the same residence. Project directors may count the value of shelter, food, and clothing, if provided at no cost by persons related to the applicant, enrollee or spouse.

Any person whose income is not more than 100 percent of the DHHS Poverty Guideline for her/his specific family unit shall be given special consideration for participation in the Foster Grandparent and Senior Companion Programs.

1997 FGP/SCP INCOME ELIGIBILITY LEVELS

[Based on 125 Percent of DHHS Poverty Guidelines]

States	Family units of			
	One	Two	Three	Four
All, except High Cost Areas, Alaska & Hawaii	$9,865	$13,265	$16,665	$20,065

(For family units with more than four members, add $3,400 for each additional member in all States except designated High Cost Areas, Alaska, and Hawaii).

1997 FGP/SCP INCOME ELIGIBILITY LEVELS FOR HIGH COST AREAS

[Based on 135 Percent of DHHS Poverty Guidelines]

Area	Family units of			
	One	Two	Three	Four
All, except Alaska & Hawaii	$10,655	$14,325	$17,995	$21,670
Alaska	13,325	17,915	22,505	27,095
Hawaii	12,245	16,470	20,695	24,925

(For family units with more than four members, add: $4,590 in Alaska, $4,225 in Hawaii, and $3,670 in all other areas for each additional member).

The income eligibility levels specified above are based on 135 percent of the DHHS poverty guidelines and are applicable to the following high cost metropolitan statistical areas and primary metropolitan statistical areas:

High Cost Areas

(Including all Counties/Locations Included in that Area as Defined by the Office of Management and Budget).

Alaska

(All Locations).

California

Los Angeles-Compton-San Gabriel-Long Beach-Hawthorne (Los Angeles County).

Santa Barbara/Santa Maria/Lompoc (Santa Barbara County).

Santa Cruz-Watsonville (Santa Cruz County).

Santa Rosa-Petaluma (Sonoma County).

San Diego-El Cajon (San Diego County).

San Jose-Los Gatos (Santa Clara County).

San Francisco/San Rafael (Marin County).

San Francisco/Redwood City (San Mateo County).

San Francisco (San Francisco County).

Oakland-Berkeley (Alameda County).

Oakland-Martinez (Contra Costa County).

Anaheim-Santa Ana (Orange County).

Oxnard-Ventura (Ventura County).

District of Columbia/Maryland/Virginia

District of Columbia and Surrounding Counties in Maryland and Virginia.

MD counties: Calvert, Charles, Cecil, Frederick, Montgomery and Prince Georges Counties.

VA counties: Arlington, Fairfax, Loudoun, Prince William, Stafford, Alexandria City, Fairfax City, Falls Church City, Manassas City and Manassas Park City.

Hawaii

(All Locations).

Illinois

Chicago-Des Plaines-Oak Park-Wheaton-Woodstock (Cook, DuPage and McHenry Counties).

Massachusetts

Fall River (Bristol County).

Boston-Malden (Essex, Norfolk, Plymouth, Middlesex and Suffolk Counties).

Salem-Gloucester (Essex County).

Worcester (Worcester County).

Brockton-Quincy-Braintree (Norfolk County).

Dorchester (Suffolk County).

Fitchburg-Leominster (Worcester County).

New Jersey

Bergen-Passaic-Paterson (Bergen and Passaic Counties).

Middlesex-Somerset-Hunterdon (Hunterdon, Middlesex and Somerset Counties).

Monmouth-Ocean-Spring Lake (Monmouth and Ocean Counties).

Newark-East Orange (Essex, Morris, Sussex and Union Counties).

Trenton (Mercer County).

New York

Nassau-Suffolk-Long Beach-Huntington (Suffolk and Nassau Counties).

New York-Bronx-Brooklyn (Bronx, Kings, New York, Putnam, Queens, Richmond and Rockland Counties).

Westchester-White Plains-Yonkers-Valhalla (Westchester County).

Pennsylvania

Philadelphia-Doylestown-West Chester-Media-Norristown (Bucks, Chester, Delaware, Montgomery and Philadelphia Counties).

The revised income eligibility levels presented here are calculated from the base DHHS Poverty Guidelines now in effect as follows:

1997 DHHS POVERTY GUIDELINES FOR ALL STATES

States	Family units of			
	One	Two	Three	Four
All, except Alaska & Hawaii	$7,890	$10,610	$13,330	$16,050
Alaska	9,870	13,270	16,670	20,070
Hawaii	9,070	12,200	15,330	18,460

Authority: These programs are authorized pursuant to the Domestic Volunteer Service Act of 1973, as amended (42 U.S.C 4950 *et seq.*). The income eligibility levels are determined by the current guidelines published by DHHS pursuant to Sections 652 and 673 (2) of the Omnibus Budget Reconciliation Act of 1981 which requires poverty guidelines to be adjusted for Consumer Price Index changes.

Dated: May 7, 1997.

Thomas E. Endres,

Director, National Senior Service Corps.

[FR Doc. 97–12470 Filed 5–12–97; 8:45 am]

BILLING CODE 6050–28–P

DEPARTMENT OF DEFENSE

Office of the Secretary of Defense

Department of Defense Wage Committee; Notice of Closed Meetings

Pursuant to the provisions of section 10 of Public Law 92–463, the Federal Advisory Committee Act, notice is hereby given that closed meetings of the Department of Defense Wage Committee will be held on June 3, 1997; June 10, 1997; June 17, 1997; and June 24, 1997, at 10:00 a.m. in Room A105, The Nash Building, 1400 Key Boulevard, Rosslyn, VA.

Under the provisions of section 10(d) of Public Law 92–463, the Department of Defense has determined that the meetings meet the criteria to close meetings to the public because the matters to be considered are related to internal rules and practices of the Department of Defense and the detailed wage data to be considered were obtained from officials of private establishments with a guarantee that the data will be held in confidence.

However, members of the public who may wish to do so are invited to submit material in writing to the chairman concerning matters believed to be deserving of the Committee's attention.

Additional information concerning the meetings may be obtained by writing to the Chairman, Department of Defense Wage Committee, 4000 Defense Pentagon, Washington, DC 20301–4000.

Dated: May 7, 1997.

L.M. Bynum,

Alternate OSD Federal Register Liaison Officer, Department of Defense.

[FR Doc. 97–12427 Filed 5–12–97; 8:45 am]

BILLING CODE 5000–04–M

DEPARTMENT OF DEFENSE

Office of the Secretary

Defense Intelligence Agency, Scientific Advisory Board; Closed Meeting

AGENCY: Department of Defense, Defense Intelligence Agency.

ACTION: Notice.

SUMMARY: Pursuant to the provisions of Subsection (d) of Section 10 of Public Law 92–463, as amended by Section 5 of Public Law 94–409, notice is hereby given that a closed meeting of the DIA Scientific Advisory Board has been scheduled as follows:

DATES: May 28 and May 29, 1997 (8:00 am to 16:00 pm).

ADDRESSES: The Defense Intelligence Agency, Bolling AFB, Washington, D.C. 20340–5100.

FOR FURTHER INFORMATION CONTACT: Maj. Michael W. Lamb, USAF, Executive Secretariat, DIA Scientific Advisory Board, Washington, D.C. 20340–1328 (202) 231–4930.

SUPPLEMENTARY INFORMATION: The entire meeting is devoted to the discussion of classified information as defined in Section 552b(c)(I). Title 5 of the U.S. Code and therefore will be closed to the public. The Board will receive briefings on and discuss several current critical intelligence issues and advise the Director, DIA, on related scientific and technical matters.

Dated: May 6, 1997.

L.M. Bynum,

Alternate OSD Federal Register Liaison Officer, Department of Defense.

[FR Doc. 97–12426 Filed 5–12–97; 8:45 am]

BILLING CODE 5000–04–M

DEPARTMENT OF DEFENSE

Office of the Secretary

Meeting of the Advisory Council on Dependents' Education

AGENCY: Department of Defense, Department of Defense Dependents Schools (DoDDS).

ACTION: Notice of meeting.

SUMMARY: Notice is hereby given of a forthcoming semiannual public meeting of the Advisory Council on Dependents' Education (ACDE). The purpose of this meeting is to review the reports on topics raised during the ACDE team visits in November 1996 to DoD overseas schools in Korea and Japan.

DATES: May 29, 1997, 8:30 a.m. to 5 p.m. and May 30, 1997, 8:30 a.m. to 1 p.m.

ADDRESSES: This meeting will be held in the Secretary of Defense Conference Room (Room 3E869) in the Pentagon.

FOR FURTHER INFORMATION CONTACT: Ms. Amy Huffman, Department of Defense Dependents Schools, 4040 North Fairfax Drive, Arlington, Virginia, 22203–1635. Ms. Huffman can be reached at 703–696–4235, extension 100.

SUPPLEMENTARY INFORMATION: Space constraints are such that anyone wishing to attend the meeting should contact Ms. Amy Huffman, above, to ensure that seating space is available. The Advisory Council on Dependents' Education is established under Title XIV, section 1411, of Public Law 95–561, Defense Dependents' Education Act of 1978, as amended (20 U.S.C. section 929). The purpose of the Council is to recommend to the Director, DoDDS, general policies for the operation of the DoDDS, to provide the Director, DoDDS,

with information about effective educational programs and practices that should be considered by DoDDS, and to perform other tasks as may be required by the Secretary of Defense.

Dated: May 7, 1997.

L.M. Bynum,

Alternate OSD Federal Register Liaison Officer, Department of Defense.

[FR Doc. 97–12424 Filed 5–12–97; 8:45 am]

BILLING CODE 5000–04–M

DEPARTMENT OF DEFENSE

Office of the Secretary

Defense Intelligence Agency, Scientific Advisory Board; Closed Meeting

AGENCY: Department of Defense, Defense Intelligence Agency.

ACTION: Notice.

SUMMARY: Pursuant to the provisions of Subsection (d) of Section 10 of Public Law 92–463, as amended by Section 5 of Public Law 94–409, notice is hereby given that a closed meeting of the DIA Scientific Advisory Board has been scheduled as follows:

DATES: 28–29 May 1997 (8:00 am to 16:00 pm).

ADDRESSES: The Defense Intelligence Agency, Bolling AFB, Washington, DC 20340–5100.

FOR FURTHER INFORMATION CONTACT: Maj. Michael W. Lamb, USAF, Executive Secretary, DIA Scientific Advisory Board, Washington, DC 20340–1328 (202) 231–4930.

SUPPLEMENTARY INFORMATION: The entire meeting is devoted to the discussion of classified information as defined in Section 552b(c)(I), Title 5 of the U.S. Code and therefore will be closed to the public. The Board will receive briefings on and discuss several current critical intelligence issues and advise the Director, DIA, on related scientific and technical matters.

Dated: May 6, 1997.

L.M. Bynum,

Alternate OSD Federal Register Liaison Officer, Department of Defense.

[FR Doc. 97–12425 Filed 5–12–97; 8:45 am]

BILLING CODE 5000–04–M

DEPARTMENT OF ENERGY

Environmental Management Site-Specific Advisory Board, Idaho National Engineering and Environmental Laboratory

AGENCY: Department of Energy.

ACTION: Notice of open meeting.

SUMMARY: Pursuant to the provisions of the Federal Advisory Committee Act (Pub. L. 92–463, 86 Stat. 770) notice is hereby given of the following Advisory Committee meeting: Environmental Management Site-Specific Advisory Board (EM SSAB), Idaho National Engineering and Environmental Laboratory (INEEL).

DATES: Tuesday, May 20, 1997 from 8:00 a.m. to 6:00 p.m., Mountain Standard Time (MST). Wednesday, May 21, 1997 from 7:30 a.m. to 5:00 p.m., MST. There will be a public comment availability session. Tuesday, May 20, 1997 from 5:00 p.m. to 6:00 p.m. MST.

ADDRESSES: Sun Valley Lodge, One Sun Valley Road, Sun Valley, Idaho 83353, (208) 523–8000.

FOR FURTHER INFORMATION CONTACT: INEEL Information (1–800–708–2680) or Stephanie Meyers, Jason Associates Corporation Staff Support (1–208–522–1662).

SUPPLEMENTARY INFORMATION:

Purpose of the Board: The purpose of the Board is to make recommendations to DOE and its regulators in the areas of environmental restoration, waste management, and related activities.

Tentative Agenda: The EM SSAB, INEEL will hear presentations on environmental monitoring in southeast Idaho, the Environmental Management FY 1999 budget, and DOE Headquarters Ten-Year Plan. Representatives from British Nuclear Fuels Limited will discuss the Advanced Mixed Waste Treatment Project. The Board will also be discussing high-level waste storage and disposal with representatives from the Yucca Mountain Project. On Wednesday, May 21, the Board will select new members to fill two vacancies. For a most current copy of the agenda, contact Woody Russell, DOE-Idaho, (208) 526–0561, or Stephanie Meyers, Jason Associates, (208) 522–1662. The final agenda will be available at the meeting.

Public Comment Availability: The two-day meeting is open to the public, with a Public Comment Availability session scheduled for Tuesday, May 20, 1997 from 5:00 p.m. to 6:00 p.m. MST. The Board will be available during this time period to hear verbal public comments or to review any written public comments. If there are no members of the public wishing to comment or no written comments to review, the board will continue with it's current discussion. Written statements may be filed with the Committee either before or after the meeting. Individuals who wish to make oral statements pertaining to agenda items should contact the INEEL Information line or Stephanie Meyers, Jason Associates, at the addresses or telephone numbers listed above. Requests must be received 5 days prior to the meeting and reasonable provision will be made to include the presentation in the agenda. The Designated Federal Official is empowered to conduct the meeting in a fashion that will facilitate the orderly conduct of business. Each individual wishing to make public comment will be provided a maximum of 5 minutes to present their comments. This notice is being published less than 15 days before the date of the meeting due to programmatic issues that had to be resolved.

Minutes: The minutes of this meeting will be available for public review and copying at the Freedom of Information Public Reading Room, 1E–190, Forrestal Building, 1000 Independence Avenue, SW, Washington, DC 20585 between 9:00 a.m. and 4 p.m., Monday-Friday, except Federal holidays.

Issued at Washington, DC on May 8, 1997.

Rachel M. Samuel,

Deputy Advisory Committee Management Officer.

[FR Doc. 97–12498 Filed 5–12–97; 8:45 am]

BILLING CODE 6450–01–P

DEPARTMENT OF ENERGY

Environmental Management Site-Specific Advisory Board, Oak Ridge Reservation

AGENCY: Department of Energy.

ACTION: Notice of open meeting.

SUMMARY: Pursuant to the provisions of the Federal Advisory Committee Act (Pub. L. 92–463, 86 Stat. 770) notice is hereby given of the following Advisory Committee meeting: Environmental Management Site-Specific Advisory Board (EM SSAB), Oak Ridge Reservation.

DATES: Wednesday, June 11, 6:00 p.m.—9:30 p.m.

ADDRESSES: Information Resource Center, 105 Broadway, Oak Ridge, Tennessee.

FOR FURTHER INFORMATION CONTACT: Sandy Perkins, Site-Specific Advisory Board Coordinator, Department of Energy Oak Ridge Operations Office, 105 Broadway, Oak Ridge, TN 37830, (423) 576–1590.

SUPPLEMENTARY INFORMATION:

Purpose of the Board: The purpose of the Board is to make recommendations to DOE and its regulators in the areas of environmental restoration, waste management, and related activities.

Tentative Agenda: The meeting will include a presentation by Mr. Earl Dixon, technical advisor for the EM SSAB, Nevada.

Public Participation: The meeting is open to the public. Written statements may be filed with the Committee either before or after the meeting. Individuals who wish to make oral statements pertaining to agenda items should contact Sandy Perkins at the address or telephone number listed above. Requests must be received 5 days prior to the meeting and reasonable provision will be made to include the presentation in the agenda. The Designated Federal Official is empowered to conduct the meeting in a fashion that will facilitate the orderly conduct of business. Each individual wishing to make public comment will be provided a maximum of 5 minutes to present their comments.

Minutes: The minutes of this meeting will be available for public review and copying at the Freedom of Information Public Reading Room, 1E–190, Forrestal Building, 1000 Independence Avenue, SW, Washington, DC 20585 between 9:00 a.m. and 4 p.m., Monday-Friday, except Federal holidays. Minutes will also be available at the Department of Energy's Information Resource Center at 105 Broadway, Oak Ridge, TN between 8:30 am and 5:00 pm on Monday, Wednesday, and Friday; 8:30 am and 7:00 pm on Tuesday and Thursday; and 9:00 am and 1:00 pm on Saturday, or by writing to Sandy Perkins, Department of Energy Oak Ridge Operations Office, 105 Broadway, Oak Ridge, TN 37830, or by calling her at (423) 576–1590.

Issued at Washington, DC on May 8, 1997.

Rachel M. Samuel,

Deputy Advisory Committee Management Officer.

[FR Doc. 97–12499 Filed 5–12–97; 8:45 am]

BILLING CODE 6450–01–P

DEPARTMENT OF ENERGY

DOE Response to Recommendation 97–1 of the Defense Nuclear Facilities Safety Board, Safe Storage of Uranium-233

AGENCY: Department of Energy.

ACTION: Notice.

SUMMARY: The Defense Nuclear Facilities Safety Board published Recommendation 97–1, concerning the safe storage of uranium-233, on March 11, 1997 (62 FR 11160). Section 315(b) of the Atomic Energy Act of 1954, as amended, 42 U.S.C. 2286d(b) required the Department of Energy to transmit a response to the Defense Nuclear Facilities Safety Board by April 25, 1997. The Secretary's response follows.

DATES: Comments, data, views, or arguments concerning the Secretary's response are due on or before June 12, 1997.

ADDRESSES: Send comments, data, views, or arguments concerning the Secretary's response to: Defense Nuclear Facilities Safety Board, 625 Indiana Avenue, NW, Suite 700, Washington, D.C. 20004.

FOR FURTHER INFORMATION CONTACT: Mr. Robert Stallman, Deputy Assistant Manager for Facility Operations, Department of Energy, Idaho Operations Office, 850 Energy Drive, Idaho Falls, Idaho, 83401–1563.

Issued in Washington, D.C., on May 7, 1997.

Mark B. Whitaker, Jr.

Departmental Representative to the Defense Nuclear Facilities Safety Board.

The Secretary of Energy

Washington, DC 20585

April 25, 1997

The Honorable John T. Conway,
Chairman, Defense Nuclear Facilities Safety Board, 625 Indiana Avenue, N.W., Suite 700, Washington, D.C. 20004.

Dear Mr. Chairman: This letter acknowledges receipt of your Recommendation 97–1 issued on March 3, 1997, concerning the safe storage of uranium-233 material. As you noted in your recommendation, the Department has recently completed a safety review of issues associated with highly enriched uranium. The Department's Highly Enriched Uranium Vulnerability Study identifies many of the concerns expressed in your recommendation. A management plan to address the issues in the Highly Enriched Uranium Vulnerability Study is currently being developed under the leadership of Defense Programs.

The Department accepts Recommendation 97–1. The process of assigning organizational responsibility for this effort will require further review. I am reserving our response to this issue until I have the opportunity to review the results of ongoing Department studies related to this matter.

The Department will use a systems engineering approach to manage the implementation of this recommendation. Needed actions identified as a result of a systems engineering study will be incorporated into the Department's budget formulation process and will be worked in conjunction with other related activities in progress. These activities include applicable elements of the Department's 94–1 Implementation Plan, the Environmental Management ten-year planning process, and the Highly Enriched Uranium Vulnerability Management Plan, currently under development.

It is the Department's understanding that spent nuclear fuel containing uranium-233 is not within the scope of Recommendation 97–1. In addition, I understand that uranium-233 safety concerns related to the Molten Salt Reactor Experiment at Oak Ridge are being addressed in the Recommendation 94–1 Implementation Plan on improving schedules for remediation and stabilization of nuclear materials.

Mr. Robert Stallman, Deputy Assistant Manager for Facility Operations, Idaho Operations Office, is the responsible manager for the preparation of the Implementation Plan. He will work with you and your staff to develop an acceptable Implementation Plan meeting our mutual expectations. He can be reached at (208) 526–1995.

Sincerely,

Federico F. Peña

[FR Doc. 97–12496 Filed 5–12–97; 8:45 am]

BILLING CODE 6450–01–P

DEPARTMENT OF ENERGY

Office of Energy Efficiency and Renewable Energy

National Electric and Magnetic Field Advisory Committee; Rechartering

Pursuant to Section 9 (a)(2) of the Federal Advisory Committee Act and in accordance with title 41 of the Code of the Federal Regulations, Section 101–6.1015, and following consultation with the Committee Management Secretariat, General Services Administration, notice is hereby given that the National Electric and Magnetic Fields Advisory Committee has been rechartered until December 31, 1997. The Committee will provide advice to the Secretary of Energy and the Director of the National Institute of Environmental Health Sciences.

The National Electric and Magnetic Fields Advisory Committee charter has been determined to be essential to the conduct of the Department's business and to be in the public interest in connection with the performance of duties imposed upon the Department of Energy by law. The Committee will operate in accordance with the provisions of the Federal Advisory Committee Act, the Department of Energy Organization Act (Pub. L. 95–91), and the rules and regulations issued in implementations of those Acts.

Further information regarding this Advisory Committee can be obtained from Rachel M. Samuel at (202) 586–3279.

Issued in Washington, D.C. on April 28, 1997.

Rachel M. Samuel,

Deputy Advisory Committee Management Officer.

[FR Doc. 97–12497 Filed 5–12–97; 8:45 am]

BILLING CODE 6450–01–P

DEPARTMENT OF ENERGY

Federal Energy Regulatory Commission

[Docket No. RP97–363–000]

Egan Hub Partners, L.P.; Notice of Proposed Changes in FERC Gas Tariff

May 7, 1997.

Take notice that on May 2, 1997, Egan Hub Partners, L.P. (Egan) tendered for filing as part of its FERC Gas Tariff, the tariff sheets listed on Appendix A to the filing, with an effective date of November 3, 1997.

Egan states that its filing is being made to comply with the Commission's Order No. 587 series, issued in Docket No. RM96–1–000, and the Commission's February 11, 1997, letter order in Egan Hub Partners, L.P., issued in Docket No. CP96–199–003.

Egan states that the purpose of its filing is to reflect changes to its tariff to implement the standards approved by the Gas Industry Standards Board and incorporated into the Commission's regulations.

Egan further states that copies of its filing were served on its current firm customers and interested state commissions.

Any person desiring to intervene or to protest the filing should file a motion to intervene or a protest with the Federal Energy Regulatory Commission, 888 First Street, N.E., Washington, D.C. 20426, in accordance with the Commission's rules and regulations, 18 CFR 385.211 and 385.214. All such motions or protests should be filed on or before May 22, 1997. Protests will be considered by the Commission in determining the appropriate action to be taken, but will not serve to make protestants parties to the proceeding. Any person wishing to become a party must file a motion to intervene. Copies of this filing are on file with the Commission and are available for public inspection in the Public Reference Room.

Lois D. Cashell,

Secretary.

[FR Doc. 97–12439 Filed 5–12–97; 8:45 am]

BILLING CODE 6717–01–M

DEPARTMENT OF ENERGY

Federal Energy Regulatory Commission

[Docket No. RP97–364–000]

Koch Gateway Pipeline Company; Notice of Proposed Changes in FERC Gas Tariff

May 7, 1997.

Take notice that on May 2, 1997, Koch Gateway Pipeline Company (Koch) tendered for filing as part of its FERC Gas Tariff, Fifth Revised Volume No. 1, the tariff sheets listed on attachment 1 to the filing, to become effective June 1, 1997.

Koch states that the proposed tariff sheets update certain tariff provisions and terminology consistent with the standardized business practices which will become effective on June 1, 1997. Koch states that this filing primarily consists of minor tariff clarifications to ensure a smooth transition from its current practices to the standardized industry structure.

Koch also states that it has served copies of this filing upon each affected customer, state commission, and other interested parties.

Any person desiring to be heard or to protest this filing should file a motion to intervene or protest with the Federal Energy Regulatory Commission, 888 First Street, NE., Washington, DC 20426, in accordance with Sections 385.214 and 385.211 of the Commission's rules and regulations. All such motions or protests must be filed as provided by Section 154.210 of the Commission's Regulations. Protests will be considered by the Commission in determining the appropriate action to be taken, but will not serve to make protestants parties to the proceeding. Any person wishing to become a party must file a motion to intervene. Copies of this filing are on file with the Commission and are available for public inspection in the Public Reference Room.

Lois D. Cashell,

Secretary.

[FR Doc. 97–12438 Filed 5–12–97; 8:45 am]

BILLING CODE 6717–01–M

DEPARTMENT OF ENERGY

Federal Energy Regulatory Commission

[Docket No. RP97–361–000]

Mobile Bay Pipeline Company; Notice of Proposed Changes in FERC Gas Tariff

May 7, 1997.

Take notice that on May 2, 1997, Mobile Bay Pipeline Company (Mobile Bay) tendered for filing as part of its FERC Gas Tariff, Second Revised Volume No. 1, the tariff sheets listed on attachment 1 to the filing, to become effective June 1, 1997.

Mobile Bay states that the proposed tariff sheets update certain tariff provisions and terminology consistent with the standardized business practices which will become effective on June 1, 1997. Mobile Bay states that this filing primarily consists of minor tariff clarifications to ensure a smooth transition from its current practices to the standardized industry structure.

Mobile Bay also states that it has served copies of this filing upon each affected customer, and interested parties.

Any person desiring to be heard or to protest this filing should file a motion to intervene or protest with the Federal Energy Regulatory Commission, 888 First Street, NE., Washington, DC 20426, in accordance with Sections 385.214 and 385.211 of the Commission's rules and regulations. All such motions or protests must be filed as provided by Section 154.210 of the Commission's Regulations. Protests will be considered by the Commission in determining the appropriate action to be taken, but will not serve to make protestants parties to the proceeding. Any person wishing to become a part must file a motion to intervene. Copies of this filing are on file with the Commission and are available for public inspection in the Public Reference Room.

Lois D. Cashell,

Secretary.

[FR Doc. 97–12440 Filed 5–12–97; 8:45 am]

BILLING CODE 6717–01–M

DEPARTMENT OF ENERGY

Federal Energy Regulatory Commission

[Docket No. CP97–92–001]

Transcontinental Gas Pipe Line Corporation; Notice of Application

May 7, 1997.

Take notice that on May 1, 1997, Transcontinental Gas Pipe Line Corporation (Transco), P.O. Box 1396, Houston, Texas 77251, filed in Docket No. CP97–92–001 an amendment to its initial application pursuant to Section 7(c) of the Natural Gas Act for a certificate of public convenience and necessity authorizing an extension and expansion of Transco's Mobile Bay Lateral (Project). Transco states that the purpose of the amendment is to eliminate or modify certain onshore and offshore facilities [1] that were originally proposed, in order to revise the total capacity of the project to the dekatherm equivalent of 350 million cubic feet per day (MMcf/d) of firm transportation capacity on the offshore extension of the Mobile Bay Lateral and 263.848 MMcf/d of additional firm transportation capacity [2] in the existing onshore Mobil Bay Lateral, thereby reducing the scope of the Project to correspond to the firm transportation commitment evidenced by the transportation Precedent Agreement executed by Transco and Williams Energy Services Company (WESCO) all as more fully set forth in the application which is on file with the Commission and open to public inspection.

Transco seeks authority to construct and place in service the Project facilities in phases. It is stated that in Phase I, Transco intends to place in service by July 1, 1998, all of its offshore extension facilities to provide the entire 350 MMcf/s of offshore capacity, as well as the Station No. 82 compression addition. As part of Phase I, Transco also seeks to place into service the onshore capacity which will become available as a result of the Mobile Bay Lateral capacity relinquishments requests in order to provide initial onshore capacity of 214.289 MMcf/d. In Phase II, Transco proposes to place into service by November 1, 1989 its Station No. 83 compression facilities for the remaining 135.711 MMcf/d of onshore capacity.

Transco further requests authority to charge as its initial rate for the entire capacity its then current Rate Schedule FT maximum rate for Zone 4A upon placing the Phase I facilities in service. Transco also seeks to roll-in the revised costs associated with the Project as amended here in its first NGA Section 4 proceeding after Transco places all Project facilities in service.

Transco states that the Project facilities as revised by this amendment will create firm transportation capacity of 350 MMcf/d from Main Pass Area Block 261 to Transco's Station No. 82 and 263.848 MMcf/d (which, in conjunction with 86.152 MMcf/d of capacity turnback on the Mobile Bay Lateral, provides for a total 350 MMcf/d of capacity) from Station No. 82 to Station No. 85 where Transco's Mobil Bay Lateral interconnects with its mainline in Choctaw County, Alabama.

Phase I Facilities

Transco states that it will construct:

1. Offshore Extension Facilities

a. Approximately 56.58 miles of 24-inch diameter pipeline extending from an offshore platform currently being designed for installation at East Main Pass, Block 261 (Transco has purchased a portion of SOCO's undivided ownership interest in the Block 261 platform in order to place a 24-inch spare launcher, measurement equipment, riser pipe and appurtenant facilities on the platform), to a proposed new junction platform located in the Mobile Bay Area, Block 822 (MB 822) which will be constructed, operated and owned by Transco.

b. Approximately 18.89 miles of 30-inch diameter pipeline extending from the junction platform at MB 822 to a proposed nonjurisdictional separation and processing plant owned and operated by WFS, in Mobile County, Alabama. The total amount of 24, 30, and 36-inch pipeline required for the offshore extension is 75.66 miles.

c. Junction Platform facilities in the MB 822 area, including a 24-inch sphere receive and a 30-inch sphere launcher and appurtenant facilities.

2. Station No. 82 Compression Addition

A 15,000 horsepower compression addition at Transco's existing Station No. 82 in Mobile County, Alabama (i.e., the amount of compression at Station No. 82 is reduced from the 26,000 horsepower addition which was originally proposed.

Phase II Facilities

Transco states that it will construct a new Compressor Station No. 83 in Mobile County, Alabama at Mobile Bay Lateral MP 68.4, housing a 15,000 horsepower compressor unit.

Non-Jurisdictional Facilities

Transco states that Williams Field Services Company (WFS) will construct, own and operate a 600 MMcf per day processing plant, including a 350 MMcf/d separation facility, immediately upstream of Compressor Station No. 82. The plant will be designed to remove liquids from the pipeline and deliver pipeline quality natural gas to the suction side of Compressor Station No. 82. The plant is estimated to require 30 acres of land and is planned to be located immediately to the west and adjacent to Compressor Station No. 82. (Transco states that these nonjurisdictional facilities are not included in the Project facilities.)

Transco estimates that the cost of the Phase I and Phase II Project facilities, as revised by this amendment, will cost in the aggregate approximately $120.2 million.

Transco states that immediately after filing its original application, it held an open season from November 15, 1996, through December 16, 1996 for the Project capacity. Transco concurrently requested offers of permanent firm capacity relinquishments from existing Mobile Bay Lateral shippers in order to approximately size the onshore portion of the Project expansion. Transco states that it received relinquishment offers from two entities: 58.616 MMcf/d from two FT contracts held by WESCO and 27.536 MMcf/d from one FT contract held by Enron Capital and Trade Resources Corp., for a total capacity relinquishment of 86.152 MMcf/d on the existing Mobile Bay Lateral. As a result of the open season, Transco and WESCO have executed a 15-year binding Precedent Agreement containing a subscription by WESCO for the full Project capacity of 362,250 Dt/d (based on Transco's tariff Btu conversion standard of 1035 Btu/cf, but in no event will Transco's transportation commitment exceed 350 MMcf/d on any day, irrespective of the actual Btu content of the gas).

Transco states that the firm transportation service to be rendered through this new capacity will be performed under its Rate Schedule FT and Part 284(G) of the Commission's regulations. Transco states that it will

[1] In referring to the ''offshore extension'' of its Mobile Bay Lateral, Transco states that approximately 72.0 miles of the extension as revised will be located offshore and approximately 4.0 miles will be located onshore upstream of and connecting with Station No. 82, which is the existing terminus of the Mobile Bay Lateral.

[2] Transco states that it is sizing its onshore expansion facilities to provide less capacity than its offshore extension facilities based on its receipt of 86.152 MMcf/d of capacity relinquishment on the Mobile Bay Lateral. Transco states that together with the 263.848 MMcf/d of additional firm capacity, this Project provides for 350 MMcf/d of total onshore capacity.

charge the Project shippers the then-current Zone 4A maximum rate under Rate Schedule FT in effect when the Phase I facilities are placed in service, plus any applicable surcharges.

Transco requests that the Commission grant rolled-in rate treatment for the costs associated with the Mobile Bay Project as revised by this amendment in Transco's first Section 4 rate proceeding to become effective after the in-service date of the Project. Transco states that a presumption to roll-in the Project costs applies because the rate impact on its existing customers under each firm rate schedule is less than the five percent threshold set forth in the Commission's Statement of Policy for pricing new pipeline construction. Transco also states that the facilities constructed as part of the Project will produce significant system-wide operational and financial benefits and will be operated on an integrated basis with its existing facilities.

To meet the proposed in-service date of July 1, 1998 for Phase I and November 15, 1998 for Phase II of the Project, Transco requests that the Commission issue a preliminary determination approving all aspects of this application other than environmental matters by October 1, 1997, with a final determination and all appropriate certificate authorizations by December 1, 1997.

Any person desiring to be heard or to make any protest with reference to said application should on or before May 28, 1997, file with the Federal Energy Regulatory Commission, Washington, D.C. 20426, a motion to intervene or a protest in accordance with the requirements of the Commission's Rules of Practice and Procedure (18 CFR 385.214 or 385.211) and the Regulations under the Natural Gas Act (18 CFR 157.10). All protests filed with the Commission will be considered by it in determining the appropriate action to be taken but will not serve to make the protestants parties to the proceeding. Any person wishing to become a party to a proceeding or to participate as a party in any hearing therein must file a motion to intervene in accordance with the Commission's Rules.

Take further notice that, pursuant to the authority contained in and subject to jurisdiction conferred upon the Federal Energy Regulatory Commission by Sections 7 and 15 of the Natural Gas Act and the Commission's Rules of Practice and procedure, a hearing will be held with further notice before the Commission or its designee on this application if no motion to intervene is filed within the time required herein, if the commission on its own review of the matter finds that a grant of the certificate is required by the public convenience and necessity. If a motion for leave to intervene is timely filed, or if the Commission on its own motion believes that a formal hearing is required, further notice of such hearing will be duly given.

Under the procedure herein provided for, unless otherwise advised, it will be unnecessary for Transco to appear or be represented at the hearing.

Lois D. Cashell,

Secretary.

[FR Doc. 97–12441 Filed 5–12–97; 8:45 am]

BILLING CODE 6717–01–M

DEPARTMENT OF ENERGY

Federal Energy Regulatory Commission

[Docket No. ER95–208–009, et al.]

KCS Power Marketing, Inc., et al.; Electric Rate and Corporate Regulation Filings

May 6, 1997.

Take notice that the following filings have been made with the Commission:

1. KCS Power Marketing, Inc.

[Docket No. ER95–208–009]

Take notice that on April 7, 1997, KCS Power Marketing, Inc. tendered for filing a letter stating that KCS Power Marketing, Inc. dissolved during the first quarter of 1997, and therefore request that the Commission terminate the rate schedule of KCS Power Marketing, Inc.

Comment date: May 19, 1997, in accordance with Standard Paragraph E at the end of this notice.

2. Ohio Edison Company; Pennsylvania Power Company

[Docket No. ER97–644–001]

Take notice that on April 11, 1997, Ohio Edison Company tendered for filing on behalf of itself and Pennsylvania Power Company, a compliance filing modifying its Power Sales Tariff in accordance with the Commission's March 27, 1997, Order Accepting And Suspending Cost-Based Power Sales Tariff, As Modified. This filing is made pursuant to Section 205 of the Federal Power Act.

Comment date: May 20, 1997, in accordance with Standard Paragraph E at the end of this notice.

3. PEC Energy Marketing, Inc.

[Docket No. ER97–1431–000]

Take notice that on April 25, 1997, PEC Energy Marketing, Inc. (PEC) tendered for filing an amended petition for waivers and blanket approvals under various regulations of the Commission and for an order accepting its FERC Electric Rate Schedule No. 1 to be effective at the earliest possible time, but no later than 60 days from the date of its filing.

PEC intends to engage in electric power and energy transactions as a marketer and a broker. In transactions where PEC sells electric energy, it proposes to make such sales on rates, terms and conditions to be mutually agreed to with the purchasing party. As outlined in the amended petition PEC is an affiliate of GPU, Inc., a public utility holding company and the parent company of Jersey Central Power & Light Company, Metropolitan Edison Company and Pennsylvania Electric Company.

Comment date: May 20, 1997, in accordance with Standard Paragraph E at the end of this notice.

4. DePere Energy Marketing, Inc.

[Docket No. ER97–1432–000]

Take notice that on April 25, 1997, DePere Energy Marketing, Inc. (DePere) tendered for filing an amended petition for waivers and blanket approvals under various regulations of the Commission and for an order accepting its FERC Electric Rate Schedule No. 1 to be effective at the earliest possible time, but no later than 60 days from the date of its filing.

DePere intends to engage in electric power and energy transactions as a marketer and a broker. In transactions where DePere sells electric energy, it proposes to make such sales on rates, terms and conditions to be mutually agreed to with the purchasing party. As outlined in the amended petition DePere is an affiliate of GPU, Inc., a public utility holding company and the parent company of Jersey Central Power & Light Company, Metropolitan Edison Company and Pennsylvania Electric Company.

Comment date: May 20, 1997, in accordance with Standard Paragraph E at the end of this notice.

5. Northeast Energy Services, Inc.

[Docket No. ER97–2570–000]

Take notice that on May 2, 1997, Northeast Energy Services, Inc. tendered for filing an amendment in the above-referenced docket.

Comment date: May 20, 1997, in accordance with Standard Paragraph E at the end of this notice.

6. Interstate Power Company

[Docket No. ER97–2645–000]

Take notice that on April 22, 1997, Interstate Power Company (IPW), tendered for filing a Transmission Service Agreement between IPW and NIPSO Energy Services, Inc. Under the Transmission Service Agreement, IPW will provide non-firm point-to-point transmission service to NIPSO Energy Services, Inc.

Comment date: May 20, 1997, in accordance with Standard Paragraph E at the end of this notice.

7. Public Service Electric and Gas Company

[Docket No. ER97–2646–000]

Take notice that on April 22, 1997, Public Service Electric and Gas Company (PSE&G), tendered for filing two sets of tariff sheets modifying its Bulk Power Service Tariff, Original Volume No. 2. PSE&G states that the purpose of the filing is to modify its Bulk Power Service Tariff in order to comply with the unbundling requirements of Order No. 888. PSE&G requests that First Revised Volume No. 2 become effective on July 9, 1996 and remain in effect until March 31, 1997. PSE&G further requests that Second Revised Volume No. 2 take effect on April 1, 1997.

Comment date: May 20, 1997, in accordance with Standard Paragraph E at the end of this notice.

8. Duquesne Light Company

[Docket No. ER97–2647–000]

Take notice that on April 23, 1997, Duquesne Light Company (DLC), filed a Service Agreement dated April 8, 1997 with Cinergy under DLC's Open Access Transmission Tariff (Tariff). The Service Agreement adds Cinergy as a customer under the Tariff. DLC requests an effective date of April 8, 1997, for the Service Agreement.

Comment date: May 20, 1997, in accordance with Standard Paragraph E at the end of this notice.

9. The Montana Power Company

[Docket No. ER97–2649–000]

Take notice that on April 22, 1997, The Montana Power Company (Montana), tendered for filing with the Federal Energy Regulatory Commission a supplement to Montana Rate Schedule FERC No. 176. Rate Schedule FERC No. 176 is a Power Sales Agreement between Montana and The Department of Water and Power of the City of Los Angeles.

Comment date: May 20, 1997, in accordance with Standard Paragraph E at the end of this notice.

10. Northeast Utilities Service Company

[Docket No. ER97–2650–000]

Take notice that on April 23, 1997, Northeast Utilities Service Company (NUSCO), tendered for filing a Service Agreement with PECO energy under the NU system Companies' Sale for Resale, Tariff No. 7.

NUSCO states that a copy of this filing has been mailed to the PECO Energy.

NUSCO requests that the Service Agreement become effective February 1, 1997.

Comment date: May 20, 1997, in accordance with Standard Paragraph E at the end of this notice.

11. Ohio Edison Company, Pennsylvania Power Company

[Docket No. ER97–2651–000]

Take notice that on April 23, 1997, Ohio Edison Company tendered for filing on behalf of itself and Pennsylvania Power Company, a Service Agreement with Coral Power, L.L.C. under Ohio Edison's Power Sales Tariff. This filing is made pursuant to Section 205 of the Federal Power Act.

Comment date: May 20, 1997, in accordance with Standard Paragraph E at the end of this notice.

12. MidAmerican Energy Company

[Docket No. ER97–2652–000]

Take notice that on April 23, 1997, MidAmerican Energy Company (MidAmerican), filed with the Commission a Notice of Cancellation pursuant to Section 35.15 of the Commission's Regulations. MidAmerican states that the rate schedules or supplements to be canceled effective as of 11:59 p.m. on January 31, 1997 are as follows:

1. Transmission Service Agreement dated September 7, 1983, as amended and/or supplemented, between Iowa Power and Light Company (a predecessor by merger to MidAmerican) and Waverly Municipal Electric Utility. The Transmission Service Agreement has been designated as MidAmerican Rate Schedule FERC No. 49.

2. Service Schedule F and Transmission Service Schedule No. 1 to Service Schedule F of the Interchange Agreement dated June 13, 1983, as such Service Schedules have been amended and/or supplemented, between Iowa-Illinois Gas and Electric Company (a predecessor by merger to MidAmerican) and Waverly Municipal Electric Utility. The Service Schedules are supplements to or part of the Interchange Agreement which has been designated as MidAmerican Rate Schedule FERC No. 17.

3. Electric Utility Services Agreement dated May 1, 1989, as amended and/or supplemented, between Iowa Public Service Company (a predecessor by merger to MidAmerican) and the Municipal Electric Utility of Waverly. The Electric Utility Services Agreement has been designated as MidAmerican Rate Schedule FERC No. 73.

4. The assignment of capacity by Iowa-Illinois Gas and Electric Company pursuant to the Lehigh-Webster Transmission Assignments for Capacity Schedule, dated October 18, 1988, by Iowa-Illinois Gas and Electric Company, as assignor, and other assignors, to Waverly Municipal Electric Utility, as assignee. The Assignments for Capacity Schedule have been designated as Supplement No. 2 to MidAmerican Rate Schedule FERC No. 12 and Supplement No. 6 to MidAmerican Rate Schedule FERC No. 63. This termination of assignment does not terminate the assignments by the other assignors which are non-jurisdictional utilities.

5. The assignment of capacity by Iowa-Illinois Gas and Electric Company, Iowa Public Service Company and Iowa Power and Light Company, as assignors, pursuant to the Neal 3 Transmission Assignments for Capacity Schedule, dated October 15, 1985, by such assignors and another assignor to Waverly Municipal Electric Utility, as assignee. The Assignments for Capacity Schedule have been designated as a supplement to MidAmerican Rate Schedule FERC No. 42. This termination of assignment does not terminate the assignment by the other assignor which is a jurisdictional utility.

MidAmerican requests a waiver of Section 35.15 to the extent that the Notice of Cancellation has not been filed within the time required by such section. MidAmerican states that the Notice of Cancellation was not filed earlier because the termination of the agreements, service schedules and assignments identified in the Notice of Cancellation was subject to the Commission's acceptance for filing of other contracts submitted for filing in Docket Nos. ER97–1849–000 and ER97–1850–000 which acceptances were issued on April 1, 1997 and April 11, 1997, respectively.

MidAmerican has served a copy of the filing on the Municipal Electric Utility of Waverly, Iowa Utilities Board, the Illinois Commerce Commission and the South Dakota Public Utilities Commission.

Comment date: May 20, 1997, in accordance with Standard Paragraph E at the end of this notice.

13. South Carolina Electric & Gas

[Docket No. ER97–2654–000]

Take notice that on April 23, 1997, South Carolina Electric & Gas Company (SCE&G) submitted service agreements establishing North Carolina Membership Corporation (NEMC), Pennsylvania Power & Light Company (PP & L), Williams Energy Service Company (WES), Delhi Energy Services, Inc. (DES), and MidCon Power Services Corporation (MPS) as customers under

the terms of SCE&G's Open Access Transmission Tariff.

SCE&G requests an effective date of one day subsequent to the filing of the service agreements. Accordingly, SCE&G requests waiver of the Commission's notice requirements. Copies of this filing were served upon NEMC, PP & L, WES, DES, and MPS, and the South Carolina Public Service Commission.

Comment date: May 20, 1997, in accordance with Standard Paragraph E at the end of this notice.

14. The Washington Water Power Co.

[Docket No. ER97–2664–000]

Take notice that on April 23, 1997, The Washington Water Power Company (WWP) tendered for filing with the Federal Energy Regulatory Commission executed Service Agreements for Non-Firm Point-To-Point Transmission Service under WWP's Open Access Transmission Tariff—FERC Electric Tariff, Original Volume No. 8. WWP requests the Service Agreements be accepted for filing effective April 1, 1997.

Comment date: May 20, 1997, in accordance with Standard Paragraph E at the end of this notice.

Standard Paragraph

E. Any person desiring to be heard or to protest said filing should file a motion to intervene or protest with the Federal Energy Regulatory Commission, 888 First Street, NE., Washington, DC 20426, in accordance with Rules 211 and 214 of the Commission's Rules of Practice and Procedure (18 CFR 385.211 and 18 CFR 385.214). All such motions or protests should be filed on or before the comment date. Protests will be considered by the Commission in determining the appropriate action to be taken, but will not serve to make protestants parties to the proceeding. Any person wishing to become a party must file a motion to intervene. Copies of this filing are on file with the Commission and are available for public inspection.

Lois D. Cashell,

Secretary.

[FR Doc. 97–12437 Filed 5–12–97; 8:45 am]

BILLING CODE 6717–01–P

ENVIRONMENTAL PROTECTION AGENCY

[FRL–5825–2]

Agency Information Collection Activities: Proposed Collection; Comment Request; Clean Water Needs Survey Related to Abandoned Mines and Other NonPoint Source (NPS)

AGENCY: Environmental Protection Agency (EPA).

ACTION: Notice.

SUMMARY: In compliance with the Paperwork Reduction Act (44 U.S.C. 3501 *et seq.*), this notice announces that EPA is planning to submit the following continuing Information Collection Request (ICR) to the Office of Management and Budget (OMB): Continuation of OMB Number 2040–0050 ICR, EPA ICR Number 0318.06 and OMB Control Number 2040–0050, current expiration date September 30, 1997. Before submitting the ICR to OMB for review and approval, EPA is soliciting comments on specific aspects of the proposed information collection as described below.

DATES: Comments must be submitted on or before July 14, 1997.

ADDRESSES: Jacqueline Rose, Office of Wastewater Management, Mail Code 4204, US Environmental Protection Agency, 401 M Street, SE., Washington, DC 20460. Interested persons may obtain a copy of the ICR without charge by writing to the preceding address.

FOR FURTHER INFORMATION CONTACT: Jacqueline Rose /telephone number (202) 260–3063/Facsimile Number (202)260–0116 /E-mail: ROSE. JACQUELINE@EPAMAIL.EPA. GOV.

SUPPLEMENTARY INFORMATION: Affected entities: Entities potentially affected by this action are States and Territories, including the District of Columbia and Puerto Rico (a maximum of 56).

Title: CLEAN WATER NEEDS SURVEY Related to Abandoned Mines and Other NonPoint Source (NPS) (OMB Control No. 2040–0050; EPA ICR No.0318.06), expiring 9/30/97.

Abstract: A survey is planned for 1998 which will not be a full Clean Water Needs Survey. It will require a substantially reduced effort and will focus on developing data on needs from runoff from abandoned mines and NonPoint Source (s) on which we have not had information on in the past. The Clean Water Needs Survey is required by sections 205(a) and 516 (b)(1) of the Clean Water Act. Historically it is a biennial inventory of publicly-owned wastewater treatment works (POTWs) in the United States as well as an estimate of how many POTWs and other SRF eligible projects are needed to be built. The survey is a joint effort of the States, EPA Headquarters (Office of Wastewater Management (OWM)) and EPA Regions. The survey records cost and technical data associated with all POTWs, existing and proposed, in the United States. The States provide this information to EPA. EPA achieves national consistency in the final results through the application of uniform guidelines and validation techniques. The collected data support cost estimates which are used by Congress in developing allotment formulas. The data are collected over a two year period to give EPA sufficient time to complete review and verification and to prepare the final report. The States and Regions also review the collected data during this time. Note: an agency may not conduct or sponsor, and a person is not required to respond to, a collection of information unless it displays a currently valid OMB control number. The OMB control numbers for EPA's regulations are listed in 40 CFR Part 9 and 48 CFR Chapter 15.

The EPA would like to solicit comments to:

(i) evaluate whether the proposed collection of information is necessary for the proper performance of the functions of the agency, including whether the information will have practical utility;

(ii) evaluate the accuracy of the agency's estimate of the burden of the proposed collection of information, including the validity of the methodology and assumptions used;

(iii) enhance the quality, utility, and clarity of the information to be collected; and

(iv) minimize the burden of the collection of information on those who are to respond, including through the use of appropriate automated electronic, mechanical, or other technological collection techniques or other forms of information technology, e.g., permitting electronic submission of responses.

Burden Statement: The annual burden estimate for State respondents is estimated to be substantially reduced from the 1996 Survey estimate of 13,888 hours and $333,312. The estimated amount of $3,000 per respondent (100 hours × $30.00/hour), with 56 respondents, equates to $168,000. The main objectives of the 1998 data collection effort will be to develop data on runoff from abandoned mines and NonPoint Source(s). To minimize the reporting burden, the Surveys have been computerized since 1988 and EPA will continue to use the computerized data base approach. Frequency is determined

by the Congress under the Clean Water Act. No confidential information is used, nor is sensitive information protected from release under the Public Information Act used. Burden means the total time, effort, or financial resources expended by persons to generate, maintain, retain, or disclose or provide information to or for a Federal agency. This includes the time needed to review instructions; develop, acquire, install, and utilize technology and systems for the purposes of collecting, validating, and verifying information, processing and maintaining information, and disclosing and providing information; adjust the existing ways to comply with any previously applicable instructions and requirements; train personnel to be able to respond to a collection of information; search data sources; complete and review the collection of information; and transmit or otherwise disclose the information.

Dated: May 9, 1997.

Paul Baltay,

Acting Director, Municipal Support Division.

[FR Doc. 97–12479 Filed 5–12–97; 8:45 am]

BILLING CODE 6560–50–P

ENVIRONMENTAL PROTECTION AGENCY

[FRL–5824–9]

Schedule of Stakeholders/Regulatory Partners Meetings on the National Performance Measures Strategy for Enforcement and Compliance Assurance

AGENCY: Environmental Protection Agency (EPA).

ACTION: Notice.

SUMMARY: As part of its National Performance Measures Strategy, EPA has completed two public meetings and held briefings with relevant House and Senate staff. The two public meetings were held in Washington, D.C. on February 3, 1997, and in San Francisco, California on March 17, 1997. At these meetings, a wide variety of stakeholders and regulatory partners offered their ideas, and suggestions about measuring the performance of EPA's enforcement and compliance assurance program. In addition to comments EPA received at these presentations, EPA also received suggestions from various stakeholders through independent submissions. This stakeholder input has helped EPA identify broad principles to guide development and implementation of enhanced performance measures, as well as identify specific performance measures for further consideration. As part of the next phase of the strategy, EPA will hold a series of public meetings with its regulatory partners and the stakeholder groups to further discuss and examine suggested enforcement and compliance performance measures. These meetings will be held through July. A final capstone conference is planned for September. A proposed schedule of these meetings is provided in this notice.

FOR FURTHER INFORMATION CONTACT: James McDonald, U.S. Environmental Protection Agency, Office of Enforcement and Compliance Assurance, 401 M Street, SW (2201A), Washington, DC 20460; telephone (202) 564–4043, fax (202) 501–0701 or via the INTERNET at McDonald.James@EPAMAIL.EPA.GOV.

SUPPLEMENTARY INFORMATION:

I. Background

For many years, EPA has counted annual enforcement outputs (e.g., inspections conducted, number of civil and criminal cases, penalties assessed) as the predominant measure of performance for the enforcement and compliance assurance program. While these outputs will continue to be used as an important measure of environmental enforcement, EPA seeks additional measures to assess the status and trends of regulatory compliance, as well as environmental improvements resulting from enforcement and compliance assurance activities. This need was recognized during EPA's enforcement reorganization in 1993, and a commitment was made during that process to develop additional measures. In addition, the requirements of the Government Performance and Results Act (GPRA) offer an opportunity to review and improve performance measures.

For almost three years, the Office of Enforcement and Compliance Assurance (OECA) has been taking steps to improve its performance measures for enforcement and compliance assurance activities. During that time, OECA: (1) Convened a Measures of Success Work Group comprised of EPA and Regional officials, (2) developed and implemented a Case Conclusion Data Sheet (CCDS) to gather new types of information about completed cases, (3) developed and implemented a reporting measure for compliance assistance activities, and (4) realigned single-media databases to enable reporting of enforcement data by industry sector.

Through these steps, OECA has made progress in developing an enhanced set of performance measures. Specifically, OECA is now able to supplement traditional enforcement output measures with other measures, including: (1) Actions taken by violators to return to compliance, (2) quantitative environmental impact and qualitative environmental benefit of those actions, (3) types, amounts, and impact of compliance assistance activities, and (4) industry-specific compliance rates. These elements were fully operational together for the first time in FY 96, and the results of these efforts are being compiled in a national accomplishments report. However, with the initiation of the Strategy, OECA recognizes further improvements can, and should, be made with regard to reporting the state of national compliance and trends of environmental enforcement and compliance. The series of public stakeholder meetings and the ideas OECA has collected from them is an attempt to further enhance and refine the measures OECA uses.

II. The National Performance Measures Strategy

The purpose of the National Performance Measures Strategy is to develop and implement an enhanced set of performance measures for the enforcement and compliance assurance program. The Strategy includes: (1) Soliciting new ideas from regulatory partners and stakeholders for more meaningful and sophisticated measures of program performance, (2) developing a common understanding with regulatory partners and stakeholders about a set of national measures and the short and long-term steps necessary to implement them, and (3) carrying out an implementation plan to put the new set of measures into practice.

EPA is interested in hearing and considering ideas from regulatory partners and a wide range of stakeholders regarding the state of compliance and additional ways to measure the performance of EPA's enforcement and compliance assurance program. EPA accepts the idea that its current approach of counting annual enforcement outputs needs to be supplemented by other approaches that measure improvements in environmental quality and the state of compliance. As such, the Agency wants to focus the outreach effort on identifying and implementing new approaches rather than on the limitations of its current approach.

In the February and March public meetings, stakeholders and regulatory partners were asked to focus on the following issues of special interest to EPA:

1. What innovative approaches are being used (or could be used) by other environmental agencies, other regulatory agencies, and law enforcement agencies to measure the effects of their enforcement and compliance assurance programs?

2. What innovative approaches are being used by regulated facilities, companies, or trade groups and associations to measure the effect of their efforts to achieve and maintain compliance and protect the environment?

3. What can EPA use to measure the impact of its enforcement and compliance assurance program in low-income/minority population communities?

4. How can EPA measure industry performance in complying with environmental laws and regulations?

5. How can EPA measure the deterrent effect of its enforcement-related activities, including conducting inspections, taking enforcement actions, and publicizing those actions?

6. How can EPA measure the impact of compliance assistance activities and compliance incentives, such as its audit and self-disclosure policy?

EPA will use the upcoming stakeholders/regulatory partners meetings to further explore these issues.

III. Next Phase of the Strategy

As part of the Strategy, EPA now intends to meet with sets of stakeholders through the month of July to further discuss ideas and proposals for improved measures. Stakeholder participants will be asked to discuss guiding principles or specific measures that have been suggested to EPA at a prior public meeting or through independent submission. EPA will identify these discussion areas and circulate agenda items to participants or potential participants in advance of each meeting. Participants might be asked to prepare written comment on the specific issues and ideas identified in the meeting agenda and related materials.

These meetings will be open to the public, will be a half or full day in length, and will be limited to a maximum of 25 stakeholder participants. The meetings will take place in a ''roundtable'' format to promote interaction and more detailed discussion.

IV. Schedule of Stakeholders/ Regulatory Partners Meetings

Listed below is the schedule of meetings as currently developed by EPA. The schedule is subject to revision if necessary to avoid unforeseen conflicts or to accommodate additional meetings with stakeholders and regulatory partners.

(1) Wednesday, May 28, 1997, Federal Oversight Groups, (GAO, IG, OMB, and Congressional Appropriations Staff), 9:00 am—1:00 pm, Ariel Rios Building (Room #6045), 1200 Pennsylvania Avenue, NW, Washington, D.C.

(2) Thursday, May 29, 1997, Mixed Stakeholders, (Industry, Environmental and Environmental Justice Organizations), 9:00 am—5:00 pm, Washington, D.C., (Location to be determined)

(3) Wednesday, June 4, 1997, State Environmental Agencies 9:00 am—5:00 pm, EPA Region V–Chicago, IL, Great Lakes Conference Center (Lake Erie Room), 77 West Jackson Boulevard, Chicago, IL 60604–3507

(4) Thursday, June 12, 1997, Federal Regulatory Agencies, (FDA, OSHA, IRS, Customs, Coast Guard, etc.), 9:00 am—5:00 pm, Washington, D.C.

(5) Wednesday, June 25, 1997, Mixed Stakeholders, (Additional State Environmental Agencies, State AGs, Tribes, Media-Specific Associations, and Local Government Associations), 9:00 am—5:00 pm, (Location to be determined)

(6) Beginning of July (if necessary), Mixed Stakeholders, (Industry, Environmental and Environmental Justice Organizations), Washington, D.C.

(7) Late July or Beginning of August 1997, Meeting with House Staff, Meeting with Senate Staff, Second Meeting with Federal Oversight Groups

(8) Week of September 15, 1997, Capstone Conference in Washington, D.C.

V. Information for Participants

Parties interested in participating in these meetings should contact James McDonald at (202) 564–4043. In addition, EPA will be soliciting participants through various organizations and associations. Participants interested in more detailed information about the Strategy or the two public meetings, including transcripts and statements of stakeholders, can review documents at EPA's Information Resource Center, which is located at 401 M Street, SW (Room #M2904), Washington, DC 20460 (202) 260-5921, or access these documents on-line at EPA's EnviroSense web site. (The address is: http://es.inel.gov/oeca/perfmeas)

Dated: May 5, 1997.

Michael M. Stahl,

Deputy Assistant Administrator, Office of Enforcement and Compliance Assurance.

[FR Doc. 97–12477 Filed 5–12–97; 8:45 am]

BILLING CODE 6560–50–P

ENVIRONMENTAL PROTECTION AGENCY

[PF–731; FRL–5714–3]

Notice of Filing of Pesticide Petitions

AGENCY: Environmental Protection Agency (EPA).

ACTION: Notice.

SUMMARY: This notice announces the initial filing of pesticide petitions proposing the establishment of regulations for residues of certain pesticide chemicals in or on various food commodities.

DATES: Comments, identified by the docket control number PF–731, must be received on or before June 12, 1997.

ADDRESSES: By mail submit written comments to: Public Information and Records Integrity Branch, Information Resources and Services Division (7506C), Office of Pesticides Programs, Environmental Protection Agency, 401 M St., SW., Washington, DC 20460. In person bring comments to: Rm. 1132, CM #2, 1921 Jefferson Davis Highway, Arlington, VA.

Comments and data may also be submitted electronically by following the instructions under ''SUPPLEMENTARY INFORMATION.'' No confidential business information should be submitted through e-mail.

Information submitted as a comment concerning this document may be claimed confidential by marking any part or all of that information as ''Confidential Business Information'' (CBI). CBI should not be submitted through e-mail. Information marked as CBI will not be disclosed except in accordance with procedures set forth in 40 CFR part 2. A copy of the comment that does not contain CBI must be submitted for inclusion in the public record. Information not marked confidential may be disclosed publicly by EPA without prior notice. All written comments will be available for public inspection in Rm. 1132 at the address given above, from 8:30 a.m. to 4 p.m., Monday through Friday, excluding legal holidays.

FOR FURTHER INFORMATION CONTACT: By mail: Philip Errico, Product Manager (PM-25), Registration Division (7505C), Office of Pesticide Programs, Environmental Protection Agency, 401 M St., S.W., Washington, D.C. 20460.

Office Location, telephone number, and e-mail address: Rm. 241 Crystal Mall #2, 1921 Jefferson Davis Highway, Arlington, VA 22202, (703) 305–6800; e-mail: errico.phil@epamail.epa.gov.

SUPPLEMENTARY INFORMATION: EPA has received pesticide petitions as follows proposing the establishment and/or amendment of regulations for residues of certain pesticide chemicals in or on various food commodities under section 408 of the Federal Food, Drug, and Comestic Act (FFDCA), 21 U.S.C. 346a. EPA has determined that these petitions contain data or information regarding the elements set forth in section 408(d)(2); however, EPA has not fully evaluated the sufficiency of the submitted data at this time or whether the data supports grantinig of the petition. Additional data may be needed before EPA rules on the petition.

The official record for this notice of filing, as well as the public version, has been established for this notice of filing under docket control number [PF–731] (including comments and data submitted electronically as described below). A public version of this record, including printed, paper versions of electronic comments, which does not include any information claimed as CBI, is available for inspection from 8:30 a.m. to 4 p.m., Monday through Friday, excluding legal holidays. The official record is located at the address in ''ADDRESSES'' at the beginning of this document.

Electronic comments can be sent directly to EPA at:
opp-docket@epamail.epa.gov

Electronic comments must be submitted as an ASCII file avoiding the use of special characters and any form of encryption. Comment and data will also be accepted on disks in Wordperfect 5.1 file format or ASCII file format. All comments and data in electronic form must be identified by the docket number (insert docket number) and appropriate petition number. Electronic comments on this proposed rule may be filed online at many Federal Depository Libraries.

List of Subjects

Environmental protection, Agricultural commodities, Food additives, Feed additives, Pesticides and pests, Reporting and recordkeeping requirements.

Dated: April 30, 1997.

James Jones,

Acting Director, Registration Division, Office of Pesticide Programs.

Summaries of Petitions

Petitioner summaries of the pesticide petitions are printed below as required by section 408(d)(3) of the FFDCA. The summaries of the petitions were prepared by the petitioners and represent the views of the petitioners. EPA is publishing the petition summaries verbatim without editing them in any way. The petition summary announces the availability of a description of the analytical methods available to EPA for the detection and measurement of the pesticide chemical residues or an explanation of why no such method is needed.

1. DowElanco

PP 4F4412

EPA has received a pesticide petition (PP 4F4412) from DowElanco 9330 Zionsville Road Indianapolis, IN 46254 proposing pursuant to section 408(d) of the Federal Food, Drug and Cosmetic Act, 21 U.S.C. 346a(d), to amend 40 CFR part 180 by establishing a tolerance for inadvertent residues of the herbicide picloram in or on the raw agricultural commodity grain sorghum grain, forage, and stover at 0.3, 0.2, and 0.5 ppm, respectively. The proposed analytical method is ACR 73.3.S2. Pursuant to the sect 408(d)(2)(A)(i) of the FFDCA, as amended, Company has submitted the following summary of information, data and arguments in support of their pesticide petition. This summary was prepared by DowElanco and EPA has not fully evaluated the merits of the petition. EPA edited the summary to clarify that the conclusions and arguments were the petitioner's and not necessarily EPA's and to remove certain extraneous material.

Picloram provides control of deep rooted perennial weeds either in grainland, fallowland or on CRP acres. With the addition of the proposed tolerance, grain sorghum could be considered as a rotational crop option for the producer. The Agency has completed the reregistration review of picloram, culminating in publication of the Reregistration Eligibility Decision (RED) for picloram which was received on October 5, 1995. The RED concludes that picloram and its derivatives can be used without causing unreasonable adverse effects to humans or the environment. Therefore, all uses of products containing picloram acid and its derivatives were judged eligible for reregistration. In view of this comprehensive regulatory review, as well as the lack of human dietary consumption of grain sorghum and the negligible dietary impact on livestock associated with this proposed use, establishment of these tolerances will not cause exposure to exceed the levels at which there is an appreciable risk.

A. Residue Chemistry

1. *Plant metabolism*. The qualitative nature of the residue in plants is understood based on a wheat metabolism study. The residue of concern in wheat forage, straw and grain is conjugated picloram, which is hydrolyzable by acid, base and B-glucosidase. The minor metabolites that were identified in grain and straw were 4-amino-6-hydroxy-3,5-dichloropicolinic acid and 4-amino-2,3,5-trichloropyridine.

2. *Analytical method*. The analytical portions of the magnitude of residue studies were performed at DowElanco in Midland, MI. The analytical method utilized for the determination of picloram residue levels in the submitted studies was ACR 73.3.S2. There is a practical analytical method for detecting and measuring levels of picloram in or on food with a limit of quantitation that allows monitoring of food with residues at or above the levels set in these tolerances. EPA has provided information on this method to FDA. The method is available to anyone who is interested in pesticide residue enforcement.

3. *Magnitude of residues.*

Table —Summary Of Residues Of Picloram (ppm) Found In Grain Sorghum

Matrix	Range
Grain	ND[a]0.23
Forage	ND-0.17
Fodder	ND-0.44

[a]ND = less than one-half of the validated lower limit of quantitation of 0.05 µg/g in grain and 0.1 µg/g in forage and fodder.

B. Toxicological Profile

1. *Acute toxicity*. Studies for acute toxicity indicate that picloram is classified as category III for acute oral toxicity, category III for acute dermal toxicity, category I/II (depending on whether acid or salts) for acute inhalation toxicity, category IV for skin irritation potential, and category III for eye irritation potential. The potassium salt is classified as a skin sensitizer. In addition, picloram has a low vapor pressure.

Picloram potassium salt has low acute toxicity. The rat oral LD_{50} is 3,536

milligrams per kilogram (mg/kg) or greater for males and females. The rabbit dermal LD_{50} is >2,000 mg/kg and the rat inhalation LC_{50} is >1.63 mg/L air (the highest attainable concentration). Picloram potassium salt is a positive skin sensitizer in guinea pigs but is not a dermal irritant. Technical picloram potassium salt is a moderate ocular irritant but ocular exposure to the technical material would not normally be expected to occur to infants or children or the general public. End use formulations of picloram have similar low acute toxicity profiles plus low ocular toxicity as well. Therefore based on the available acute toxicity data, picloram does not pose any acute dietary risks.

2. *Genotoxicity*. Picloram acid was evaluated in the Ames test using Salmonella typhimurium. Doses ranged up to 5,000 ug/plate, with and without metabolic activation. The test substance did not produce a mutagenic response either in the presence or absence of activation.

Picloram acid was evaluated for gene mutation in mammalian cells (HGPRT/CHO). As evaluated up to toxic levels (750 ug/ml without metabolic activation; 1,250 ug/ml with metabolic activation), the compound was found to be negative for inducing forward mutation in Chinese hamster ovary (CHO) cells.

Picloram acid was evaluated for cytogenetic effects on bone marrow cells of rats via intragastric administration at dosage levels of 0 (vehicle), 20, 200 or 2,000 mg/kg. The test material did not produce cytogenetic effects in the study.

Picloram acid was evaluated for genotoxic potential as administered to primary rat hepatocyte cultures at concentrations of 0 (vehicle), 10, 33.3, 100, 333.3 or 1,000 ug/ml. The test material was negative for unscheduled DNA synthesis (UDS, a measure of DNA damage/repair) treated up to cytotoxic levels of (1,000 ug/ml).

3. *Reproductive and developmental toxicity*. The HED RfD Peer Review Committee concluded that there was no evidence, based on the available data, that picloram and its salts were associated with significant reproductive or developmental toxicity under the testing conditions.

In the following developmental toxicity studies, the dose levels that appear in parenthesis are picloram acid equivalents where the conversion factor employed was 0.86 as applied to doses of potassium salt.

Picloram potassium salt was administered to New Zealand rabbits by oral Savage at dosage levels of 0, 40, 200 and 400 milligram per kilogram per day (mg/kg/day) (picloram acid equivalents) during days 6 to 18 of gestation. The maternal NOEL is 40 (34) mg/kg/day, where the LOEL is 200 (172) mg/kg/day based on reduced maternal weight gain during gestation. The developmental NOEL is 400 mg/kg/day and the LOEL was not determined.

The potassium salt of picloram was administered to CD rats by gastric intubation at dosage levels of 0, 35 (30), 174 (150) and 347 (298) mg/kg/day during day 6–15 of gestation: The test vehicle was distilled water. There was no evidence of developmental toxicity at doses up to and including the high dose of 347 (298) mg/kg/day. The maternal LOEL is 347 (298) mg/kg/day based upon excessive salivation in the dams of the high dose group. Hence, the developmental toxicity NOEL is greater than or equal to 347 (298) mg/kg/day. The maternal toxicity LOEL is 347 (298) mg/kg/day and NOEL is 174 (150) mg/kg/day.

Picloram acid was evaluated in a 2–generation reproduction study in the CD rat. Dosage levels employed were 0, 20, 200 or 1,000 mg/kg/day. The parental LOEL is 1,000 mg/kg/day based on histopathological lesions in the kidney of males of both generations and some females. In males of both generations, blood in the urine, decreased urine specific gravity, increased absolute and relative kidney weight, and increased body weight gain was observed at the high dose. The parental LOEL is 1,000 mg/kg/day and the NOEL is 200 mg/kg/day. The reproductive LOEL was not identified and the NOEL is 1,000 mg/kg/day.

4. *Subchronic toxicity*. In a 90–day oral toxicity study, picloram acid was administered via the diet to groups of 15 F344 rats/sex/dose at dosage levels of 0, 15, 50, 150, 300 or 500 mg/kg/day. Based upon liver weight changes and minimal microscopic changes in the liver, the systemic LOEL is 150 mg/kg/day. The NOEL is 50 mg/kg/day.

In a 1982 6–month dog dietary study, picloram acid was evaluated at dosage levels of 0, 7, 35 or 175 mg/kg/day. The systemic NOEL is 35 mg/kg/day and the LOEL is 175 mg/kg/day based on decreases in the following: body weight gain, food consumption, liver weights (relative), alkaline phosphatase and alanine transaminase. Increased liver to body weight ratios and absolute weights were observed in only two males at the 35 mg/kg/day dosage level.

In a 21–day dermal toxicity study, the potassium salt of picloram was administered dermally to groups of five New Zealand white rabbits of each sex at doses of 0 (vehicle control), 75.3, 251 or 753 mg/kg/day (O. 65, 217 or 650 mg/kg/day picloram acid equivalents) for a total of 15 applications over the 21–day period. The NOEL is greater than or equal to 753 mg/kg/day for both sexes: hence, a LOEL was not established for either sex. Although the limit dose of 1,000 mg/kg/day was not achieved, practical difficulties precluded administering more test material. The study revealed the non-systemic effects of dermal irritation and very slight to well defined edema and/or erythema in both sexes at all dose levels.

5. *Chronic toxicity*. In a 1988 1–year chronic feeding study in the dog, picloram acid was administered orally via the diet at dosage levels of 0, 7, 35 or 175 mg/kg/day The LOEL is 175 mg/kg/day based on increased liver weight (absolute and relative). The NOEL is 35 mg/kg/day.

In a chronic toxicity/carcinogenicity feeding study conducted in the F344 rat, picloram acid (technical grade 93% containing 197 ppm hexachlorobenzene as an impurity) was evaluated at 0, 20, 60 or 200 mg/kg/day for 2 years. The chronic toxicity LOEL was 60 mg/kg/day as evidenced by altered size and tinctorial properties of centrilobular hepatocytes and increased absolute and/or relative liver weights in both sexes. The NOEL was 20 mg/kg/day. The study was negative for carcinogenicity, but due to concerns that a MTD may not have been achieved and the fact that the test material contained 197 ppm hexachlorobenzene impurity, the study was not considered to fulfill adequately the carcinogenicity testing requirement.

In response to the deficiencies cited in the study above, an additional 2–year dietary chronic/carcinogenicity study was conducted (in 1992) using F344 rats administered picloram acid at dosage levels of 0, 250 or 500 mg/kg/day for 104 weeks. Chronic toxicity was observed at 250 mg/kg/day among males only (increased incidence and severity of glomerulonephritis, blood in urine, decreased specific gravity of urine, increased size of hepatocytes that often had altered staining properties). Among females there were chronic effects only at 500 mg/kg/day (increased glomerulonephropathy, increased absolute and relative kidney weight). There was no evidence of carcinogenicity in this study. It should be noted that use of the Osborne-Mendel rat was waived due to lack of availability of the strain of rat. In addition, the level of hexachlorobenzene in the test material employed in this study was 12 ppm. These two studies fulfill the guidelines 83-l(a) and 83-2(a) for rats.

In a 1992 2–year dietary carcinogenicity study in B6C3F1 mice,

picloram acid was evaluated at doses of 0, 100, 500 or 1,000 mg/kg/day. The systemic NOEL in this study is 500 mg/kg/day based on a significant increase in absolute and relative kidney weights in males (at the high dose level). No histopathological lesions were found to corroborate these changes. There was no evidence of carcinogenicity.

The dose levels tested in the 1992 carcinogenicity studies in rats and mice were considered adequate for carcinogenicity testing. The treatment did not alter the spontaneous tumor profile in mice or different strains of rats tested under the testing conditions. The chemical was classified as a ''Group E - Evidence of Non-Carcinogenicity for humans.'' This classification applies to the picloram acid and potassium salt forms for which acceptable carcinogenicity studies were available for review by the HED Carcinogenicity Peer Review Committee (5/26/88).

Using its Guidelines for Carcinogen Risk Assessment published September 24, 1986 (51 FR 33992), picloram is classified as Group ''E'' for carcinogenicity (no evidence of carcinogenicity) based on the results of the carcinogenicity studies. The dose levels tested in the 1992 carcinogenicity studies in rats and mice were considered adequate for carcinogenicity testing. The treatment did not alter the spontaneous tumor profile in mice or different strains of rats tested under the testing conditions. The chemical was classified as a ''Group E - Evidence of Non-Carcinogenicity for humans.'' This classification applies to the picloram acid and potassium salt forms for which acceptable carcinogenicity studies were available for review by the HED Carcinogenicity Peer Review Committee (5/26/88). Thus, a cancer risk assessment would not be appropriate.

6. *Animal metabolism*. The absorption, distribution, metabolism and excretion of picloram acid was evaluated in female rats administered a single i.v. or oral gavage dose of 10 mg/kg, an oral gavage dose of 1,000 mg/kg 14_C-picloram, or 1 mg/kg/day unlabeled picloram by gavage for 14 days followed by a single oral gavage dose of 10 mg/kg 14_C-picloram on day 15. The study demonstrates that 14_C-picloram is rapidly absorbed, distributed and excreted following oral and i.v. administration. This study alone is not adequate; however, this study is acceptable when considered in conjunction with a male rat metabolism study which yielded similar results.

C. Aggregate Exposure

1. *Dietary exposure*— i. *Food*. For purposes of assessing the potential dietary exposure under these tolerances, aggregate exposure is estimated based on the TMRC from the existing and future potential tolerances for picloram on food crops. The TMRC is obtained by multiplying the tolerance level residues (existing and proposed) by the consumption data which estimates the amount of those food products eaten by various population subgroups. Exposure of humans to residues could also result if such residues are transferred to meat, milk, poultry or eggs. The following assumptions were used in conducting this exposure assessment: 100% of the crops were treated, the RAC residues would be at the level of the tolerance, and certain processed food residues would be at anticipated (average) levels based on processing studies (see attached Dietary Risk Evaluation for Picloram). This results in an overestimate of human exposure and a conservative assessment of risk. As mentioned previously, 0.9% of the RfD is utilized using these assumptions.

The chronic dietary exposure/risk estimates for picloram are extremely low. For the United States population as a whole, the Theoretical Maximum Residue Contribution (TMRC) is 0.001845 milligrams per kilogram of body weight per day (mg/kg bw/day), only 0.9% of the RfD. For this same group, the Anticipated Residue Contribution (ARC) is 0.001053 mg/kg bw/day, only 0.5% of the RfD. The subgroup with the greatest routine chronic exposure/risk is non-nursing infants (less than 1 year old), which has a TMRC of 0.004753 mg/kg bw/day (2.4% of the RfD) and an ARC of 0.003805 mg/kg bw/day (1.9% of the RfD).

There is currently no form of sorghum observed in human consumption surveys utilized by EPA in their DRES assessments. Therefore, sorghum tolerances will have no effect on the human dietary consumption of picloram, and the proposed action, as well as existing tolerances, pose no concern with regards to chronic dietary exposure to food residues of picloram.

ii. *Drinking water*. An additional potential source of dietary exposure to residues of pesticides are residues in drinking water. The Maximum Contaminant Level for residues of picloram in drinking water has been established at 500 µg/L and a 1-10 day Health Advisory of 20,000 µg/L. Monitoring data available from the *Pesticides in Ground Water Database* indicate that picloram has been detected in ground water at concentrations ranging up to 30 µg/L. Results reported in this database typically were focused on highly vulnerable areas and in many cases, the database reports information from poorly constructed or damaged wells. These wells are at high risk because of the potential for surface residues to be carried directly down the casing into the ground water. Recognizing these high risk situations, an analysis of this database shows that less than 3% of the wells sampled were found to contain picloram. No distinction has been made between point and non point sources of material. Many of the detection's are known to be related to point source contamination including spills at mixing/loading sites, near wells and back siphoning events. Of the detection's which may have resulted from non-point sources, none are documented to occur on sites where application would be recommended based on current labeling. Nearly 99% of the ground water detection's are at levels of less than 1% of the Maximum Contaminant Level (i.e., < 5 µg/L) established for human consumption by the EPA Office of Drinking Water. The STORET database maintained by the USEPA Office of Drinking Water indicates that picloram has been reported in surface water samples before 1988. Of these detections, 85% were at concentrations 0.13 µg/L or lower and the maximum was 4.6 µg/L. The maximum concentration reported was 4.6 µg/L.

The impact of potential residues of picloram in drinking water on the aggregate risk of the herbicide is minimal. If it is assumed that all of the drinking water in the U.S. contains 30 µg/L of picloram, the maximum observed in the groundwater data base, its contribution to the TMRC would be 0.000280 mg/kg bw/day for the general U.S. population, or 0.14% of the RfD. For the most sensitive population subgroup, Non-nursing Infants (<1 yr. old), the contribution to the TMRC would be 0.002855 mg/kg bw/day, or 1.4% of the RfD. In reality, the likelihood of drinking water being contaminated with picloram is extremely remote, and actual contribution to the dietary exposure of picloram is virtually nil.

In summary, these data on potential water exposure indicate insignificant additional dietary intake and risk for picloram.

2. *Non-dietary exposure*. This is a restricted use chemical that has no residential uses at this time; therefore, there are no human risks associated with residential uses.

Entry into a treated area soon after the application of picloram is expected to be rare given the cultural practices typically associated with the use-sites (rights-of-way, forestry, pastures, range

lands, and small grains) defined by the picloram labels at this time. Furthermore, if entry should occur, the potential exposures are expected to be minimal due to the characteristics of those use-sites

D. Cumulative Effects

The potential for cumulative effects of picloram and other substances that have a common mechanism of toxicity was considered. The mammalian toxicity of picloram is well defined. However, the biochemical mechanism of toxicity of this compound is not well known. No reliable information exists to indicate that toxic effects produced by picloram would be cumulative with those of any other chemical compounds. Therefore, consideration of a common mechanism of toxicity with other compounds is not appropriate. Thus only the potential risks of picloram are considered in the aggregate exposure assessment.

E. Safety Determination

1. *U.S. population*. In the meeting of September 30, 1993, the OPP RfD Peer Review Committee recommended that the RfD for this chemical be based on a NOEL of 20 mg/kg/day for a dose-related increase in size and altered tinctorial properties of centrilobular hepatocytes in males and females at 60 and 200 mg/kg/day in a chronic toxicity study in rats. An uncertainty factor (UF) of 100 was used to account for the inter-species extrapolation and intra-species variability. On this basis, the RfD was calculated to be 0.20 mg/kg/day. The theoretical maximum residue contribution (TMRC) from existing tolerances is 0.001845 mg/kg/day. Existing tolerances utilize 0.9% of the RfD. It should be noted that no regulatory value has been established for this chemical by the World Health Organization (WHO) up to this date. The committee classified picloram as a ''Group E'' chemical, no evidence of carcinogenicity for humans.

Using the conservative exposure assumptions described above and based on the completeness and reliability of the toxicity data, it is concluded that aggregate exposure to picloram will utilize approximately 1 percent of the RfD for the U.S. population. Generally, exposures below 100 percent of the RfD are of no concern because the RfD represents the level at or below which daily aggregate dietary exposure over a lifetime will not pose appreciable risk to human health. Thus, there is a reasonable certainty that no harm will result from aggregate exposure to picloram residues.

2. *Infants and children*. In assessing the potential for additional sensitivity of infants and children to residues of picloram, data from developmental toxicity studies in the rat and rabbit and a 2–generation reproduction study in the rat were considered. The developmental toxicity studies are designed to evaluate adverse effects on the developing organism during prenatal development resulting from pesticide exposure to one or both parents. Reproduction studies provide: (1) Information relating to effects from exposure to the pesticide on the reproductive capability of mating animals and (2) data on systemic toxicity.

Developmental toxicity was studied using rats and rabbits. The developmental study in rats resulted in a developmental NOEL of >298 mg/kg/day and a maternal toxicity NOEL of 280 mg/kg/day. A study in rabbits resulted in a maternal NOEL of 34 mg/kg/day and a developmental NOEL of 344 mg/kg/day. Based on all of the data for picloram, there is no evidence of developmental toxicity at dose levels that do not result in maternal toxicity.

In a 2–generation reproduction study in rats, The NOEL for parental systemic toxicity is 200 mg/kg/day. There was no effect on reproductive parameters at 1,000 mg/kg/day nor was there an adverse effect on the morphology, growth or viability of the offspring; thus, the reproductive NOEL is 1,000 mg/kg/day.

FFDCA section 408 provides that EPA may apply an additional safety factor for infants and children in the case of threshold effects to account for pre- and post-natal toxicity and the completeness of the database. Based on the current toxicological data requirements, the database relative to pre- and post-natal effects for children is complete. Therefore, it is concluded that an additional uncertainty factor is not warranted and that the RfD at 0.2 mg/kg/day is appropriate for assessing aggregate risk to infants and children.

Using the conservative exposure assumption previously described, it is concluded that the percent of the RfD that will be utilized by aggregate exposure to residues of picloram will be less than 4 percent of the RfD for all populations and subgroups. Since this estimate represents the ''worst case'' exposure for a given population (non-nursing infants, <1 year old), exposures will be less for all other sub-populations e.g. children, 1-6 years. Therefore, based on the completeness and reliability of the toxicity data and the conservative exposure assessment, it is concluded that there is a reasonable certainty that no harm will result to infants and children from aggregate exposure to picloram residues.

Other Considerations

F. International Tolerances

There are no Codex maximum residue levels established for residues of picloram.

1. *Endocrine effects*. An evaluation of the potential effects on the endocrine systems of mammals has not been determined; However, no evidence of such effects were reported in the chronic or reproductive toxicology studies described above. There was no observed pathology of the endocrine organs in these studies. There is no evidence at this time that picloram causes endocrine effects.

2. *Data gaps*. Data gaps currently exist for residue data for sorghum aspirated grain fractions. Based on the toxicological data and the levels of exposure, EPA has determined that the proposed tolerances will be safe.

2. Novartis Crop Protection

PP 6F4688

EPA has received a pesticide petition (PP 6F4688) from Novartis Crop Protection, Inc., P. O. Box 18300, Greensboro, North Carolina 27419, proposing pursuant to section 408(d) of the Federal Food, Drug and Cosmetic Act, 21 U.S.C. 346a(d), to amend 40 CFR part 180 by establishing a tolerance for residues of the herbicide CGA-277476, Benzoic acid, 2-[[[[4,6-dimethyl-2-pyrimidinyl)-amino]carbonyl]amino]sulfonyl]-,3-oxetanylester in or on the raw agricultural commodity soybeans at 0.01 ppm. The proposed analytical method involves homogenization, filtration, partition and cleanup with analysis by high performance liquid chromatography using UV detection. EPA has determined that the petition contains data or information regarding the elements set forth in section 408(d)(2) of the FFDCA; however, EPA has not fully evaluated the sufficiency of the submitted data at this time or whether the data supports granting of the petition. Additional data may be needed before EPA rules on the petition.

As required by section 408(d) of the FFDCA, as recently amended by the Food Quality Protection Act (FQPA) Pub.L. 104-170, Novartis Crop Protection included in the petition a summary of the petition and authorization for the summary to be published in the **Federal Register** in a notice of receipt of the petition. The summary represents the views of Novartis Crop Protection. EPA is in the process of evaluating the petition. As

required by section 408(d)(3) of the FFDCA, EPA is including the summary as a part of this notice of filing. EPA has made minor edits to the summary for the purpose of clarity.

A. Metabolism

The qualitative nature of the metabolism of CGA-277476 in plants and animals is well understood for the purposes of the proposed tolerance. Metabolism proceeds through hydrolysis of the oxetane ring with subsequent cleavage of the oxetane ester and the sulfonylurea bridge. Metabolic pathways in plants (soybeans), rats, ruminants (goats), and poultry are similar. Parent CGA-277476 is the residue of concern.

B. Analytical Methodology

Novartis Crop Protection, Inc. has submitted a practical analytical method involving homogenization, filtration, partition and cleanup with analysis by high performance liquid chromatography using UV detection. The methodology accounts for residues of CGA-277476. The limit of quantitation (LOQ) for the method is 0.01 ppm for CGA-277476. This method has undergone a successful method trial and is available for enforcement.

C. Residue

Twenty field trials were conducted in typical soybean growing areas across the U.S. Either a single preplant or preemergence application (57 grams ai/A) or a split application made preemergence followed by a post broadcast application (total of 81 grams ai/A) was made. No residues (<0.01 ppm) were found in the dry beans (1X) and no residues were found in the processed commodities at rates up to 5X. No residues (<0.01 ppm) were found in rotational crops treated at the 1X rate. A prohibition against grazing forage, hay and silage will be placed in the label, as will a 60 day preharvest interval.

D. International MRL's

There are no Codex Alimentarius Commission (CODEX) maximum residue levels (MRL's) established for residues of CGA-277476 in or on raw agricultural commodities.

E. Toxicological Profile

1. *Acute toxicity*. CGA-277476 has a low order of acute toxicity. The rat oral LD_{50} is > 5,000 mg/kg, the acute rabbit dermal LD_{50} is > 2,000 mg/kg and the rat inhalation LC_{50} is > 5.08 mg/L. CGA 277476 is moderately irritating to the skin but not irritating to the eye. It is not a skin sensitizer in guinea pigs. The commercial formulation (75WG) of CGA-277476 has a similar acute toxicity profile, with both technical and formulated product carrying a Category III CAUTION Signal Word.

2. *Genotoxicity*. Assays for genotoxicity were comprised of tests evaluating the potential of CGA-277476 to induce point mutations (Salmonella assay and a Chinese hamster V79 lung tissue assay), chromosome aberrations (mouse micronucleus and a Chinese hamster ovary study) and the ability to induce either scheduled or unscheduled DNA synthesis in rat hepatocytes. The results indicate that CGA-277476 is not mutagenic or clastogenic and does not induce unscheduled DNA synthesis.

3. *Developmental/reproductive effects*. The developmental and teratogenic potential of CGA-277476 was investigated in rats and rabbits. The results indicate that CGA-277476 was not maternally or developmentally toxic in the rabbit. Minimal developmental toxicity was observed at the limit dose (1,000 mg/kg) in the rat; the developmental no observed effect level in the rat was 300 mg/kg/day. No evidence of teratogenicity was observed at the limit dose of 1,000 mg/kg in either the rat or rabbit.

A 2–generation reproduction study was conducted with CGA-277476 at feeding levels of 0, 20, 200, 5,000 or 20,000 ppm (0, 1, 10, 250 or 1,000 mg/kg/day). The reproductive NOEL was established at a feeding level of 5,000 ppm (equivalent to approximately 250 mg/kg/day). Reduced fertility observed at the highest dose tested (20,000 ppm) was associated with degenerative changes in the seminiferous tubules and atypical spematogenesis in males and severe effects on kidneys in females. The NOEL for parental toxicity was established at the 200 ppm feeding level based on slight effects on body weight parameters at the next highest dose tested (i.e. 5,000 ppm).

4. *Subchronic toxicity*. The subchronic toxicity of CGA-277476 was evaluated in studies in the rat, mouse and dog at high doses. Target organs included the liver, spleen, blood, kidney, urogenital tract, testes, epididymis and peripheral nerves and muscles. No observable effect levels have been established for all end-points in subchronic studies. The dog appears to be the most sensitive species (NOEL = 40 ppm; 1 mg/kg) with treatment related effects on testes, peripheral nerve and muscle appearing at doses ≥ 5,000 ppm (125 mg/kg/day).

5. *Chronic effects*. The chronic toxicity of CGA-277476 was investigated in long term studies in the rat, mouse and dog. Target organs included the central and peripheral nervous systems, skeletal muscle, liver, kidney, gallbladder, testes, and blood. No observed effect levels (NOELS) have been established in each study. The dog is the most sensitive species with a NOEL = 40 ppm (1.3 mg/kg/day). Based on these data, it is expected the EPA will establish a RfD for CGA-277476 at 0.01 mg/kg/day using the NOEL of 1.3 mg/kg/day and an uncertainty factor of 100.

6. *Carcinogenicity*. The carcinogenicity studies conducted with CGA- 277476 showed no evidence of an oncogenic response in either mouse or rat at doses that did not exceed the maximum tolerated dose. Dose levels in the mouse study were 2.25, 150, 525, and 1,050 mg/kg/day. In the rat study, dose levels were 1, 10, 100, 500, 750 (females), and 1,000 (males) mg/kg/day. At the end of the chronic rat study, a statistically significant increased incidence of schwannomas was found in the heart of the 1,000 mg/kg/day male rats (7/59) compared to the control group (0/60). Based on the Guidelines for Carcinogenic Risk Assessment published by EPA September 24, 1986 (51 FR 33992), Novartis Crop Protection believes that CGA-277476 should be classified as Class E because the neoplastic response (marginal increased incidence of schwannomas) was observed only in male rats at a dose exceeding the maximum tolerated dose of 500 mg/kg/day. No effect was observed at doses ≤ 500 mg/kg/day.

F. Threshold Effects

1. *Chronic effects*. Based on the available chronic toxicity data, it is expected the EPA will establish a RfD for CGA-277476 at 0.01 mg/kg/day based on the results obtained in the 1–year feeding study in dogs using the No-Observed Effect Level (NOEL) of 1.3 mg/kg/day and an uncertainty factor of 100.

2. *Acute toxicity*. Based on the available acute toxicity data, Novartis Crop Protection believes CGA-277476 does not pose any acute dietary risks.

G. Nonthreshold Effects.

Carcinogenicity. Based on the Guidelines for Carcinogenic Risk Assessment published by EPA September 24, 1986 (51 FR 33992), Novartis Crop Protection believes that CGA-277476 should be classified as Class E because the neoplastic response (marginal increased incidence of schwannomas) was observed only in male rats at a dose exceeding the maximum tolerated dose of 500 mg/kg/day. No effect was observed at doses ≤ 500 mg/kg/day.

H. Endocrine Effects.

CGA-277476 belongs to the sulfonylurea class of chemicals, one not known or suspected of having adverse effects on the endocrine system. Reduced fertility observed in high dose females (20,000 ppm) in the rat reproduction study was associated with degenerative changes in the seminiferous tubules and a typical spermatogenesis observed in high dose males. Evidence of impaired spermatogenesis was also observed at high doses (≥ 125 mg/kg/day) in the subchronic dog study.

I. Aggregate Exposure

1. *Dietary exposure.* For purposes of assessing the potential dietary exposure to CGA-277476, Novartis Crop Protection has estimated aggregate exposure based on the Theoretical Maximum Residue Contribution from the use of CGA-277476 in or on raw agricultural commodities for which tolerances have been proposed (0.01 ppm on soybeans). In conducting this exposure assessment, Novartis has conservatively assumed that 100% of soybeans will contain CGA-277476 residues at the proposed level of 0.01 ppm. No residues are anticipated in animal commodities and therefore, tolerances in meat, meat byproducts, milk, poultry and eggs are not proposed.

2. *Drinking water exposure.* Another potential source of exposure of the general population to residues of pesticides are residues in drinking water. The potential for CGA-277476 to enter surface or ground water sources of drinking water is limited because of the low use rate. This is supported by the results of two small-scale prospective ground water monitoring studies which did not show any quantifiable residues of CGA-277476 in ground water samples. The Maximum Contaminant Level Guideline (MCLG) calculated for CGA-277476 according to EPA's procedure leads to an exposure value (7 ppb) substantially greater than any level expected to reach ground water based on study results.

3. *Non-occupational exposure.* Novartis Crop Protection has evaluated the estimated non-occupational exposure to CGA-277476 and concludes that the potential for non-occupational exposure to the general population is unlikely because CGA-277476 is not planned to be used in or around the home, including home lawns, schools, recreation facilities or parks.

J. Cumulative Risk.

Novartis Crop Protection has also considered the potential for cumulative effects of CGA-277476 and other chemicals belonging to this chemical class (sulfonylureas) that may have a common mechanism of toxicity. It is concluded that consideration of a common mechanism of toxicity is not appropriate at this time because there is no reliable data to establish whether a common mechanism exists.

K. Safety Determinations.

1. *U.S. general population.* Using the conservative exposure assumptions described above, based on the completeness and reliability of the toxicity data, Novartis Crop Protection has concluded that aggregate exposure to CGA-277476 will utilize 0.07 percent of the RfD for the U.S. population based on chronic toxicity endpoints. Because EPA generally has no concern for exposures below 100 percent of the RfD, it is concluded that there is a reasonable certainty that no harm to the general population will result from aggregate exposure to CGA-277476.

2. *Infants and children.* In assessing the potential for additional sensitivity of infants and children to residues of CGA-277476, Novartis Crop Protection has considered data discussed above from developmental toxicity studies conducted with CGA-277476 in the rat and rabbit and a 2–generation rat reproduction study. The developmental toxicity studies are designed to evaluate adverse effects on the developing organism resulting from chemical exposure during prenatal development to one or both parents. Reproduction studies provide information relating to effects from exposure to a chemical on the reproductive capability of mating animals and data on systemic toxicity.

FFDCA section 408 provides that EPA may apply an additional safety factor for infants and children in the case of threshold effects to account for pre- and post-natal toxicity and the completeness of the database. Based on the current toxicological data requirements, the database relative to pre- and post-natal effects for children is complete. Further, for CGA-277476, the NOEL of 1.3 mg/kg/day from the chronic dog study, which was used to calculate the RfD (discussed above), is at least an order of magnitude lower than the developmental NOEL of 300 mg/kg/day from the rat teratogenicity study or the reproductive NOEL of 250 mg/kg/day from the multigeneration reproduction study. There is no evidence to suggest that developing organisms are more sensitive to the effects of CGA-277476 than are adults.

However, Novartis Crop Protection has determined that when an additional tenfold safety margin is used, the percent of the RfD that will be utilized by aggregate exposure to residues of CGA-277476 is 0.8 percent for nursing infants less than 1 year old, 3.5 percent for non-nursing infants, 1.4 percent for children 1 to 6 years old and 1.1 percent for children 7 to 12 years old. Therefore, based on the completeness and reliability of the toxicity data and the conservative exposure assessment, it is concluded that there is a reasonable certainty that no harm to infants and children will result from aggregate exposure to CGA-277476 residues.

3. Siemer and Associates

PP 6F4789

EPA has received a pesticide petition (PP 6F4789) from Siemer & Associates, Inc. on behalf of National Chelating, 4672 West Jennifer, Suite 103, Fresno, CA 93722, proposing pursuant to section 408(d) of the Federal Food, Drug and Cosmetic Act, 21 U.S.C. 346a(d), to amend 40 CFR part 180 by establishing an exemption from the requirements for a tolerance for ammonium thiosulfate when used for blossom thinning on apples.

Pursuant to the section 408(d)(2)(A)(i) of the FFDCA, as amended, Siemer & Associates, Inc. on behalf of National Chelating has submitted the following summary of information, data and arguments in support of their pesticide petition. This summary was prepared by Siemer & Associates, Inc. and EPA has not fully evaluated the merits of the petition. EPA edited the summary to clarify that the conclusions and arguments were the petitioner's and not necessarily EPA's and to remove certain extraneous material.

On August 30, 1996 Siemer & Associates on behalf of National Chelating petitioned the EPA, under pesticide petition 6F4789, for a permanent exemption from the requirements of a tolerance for ammonium thiosulfate on apples.

Section 408(b)(2)(A) of the amended Federal Food, Drug, and Cosmetic Act allows the EPA to establish an exemption from the requirements for a tolerance only if the Administrator determines that there is a ''reasonable certainty that no harm will result from the aggregate exposure to the pesticide chemical residue, including all anticipated dietary exposures and all other exposures for which there is reliable information.''

The available information indicates that there is a reasonable certainty that no harm will result from various types of exposure. Requests for waivers from the requirements of performing studies for known chemistry are presented and

substantiated. The following is a summary of the information submitted to the EPA to support the establishment, under Section 408(b)(2)(D) of the amended FFDCA, of a tolerance for ammonium thiosulfate on apples.

A. Residue Chemistry

1. *Plant metabolism*. The qualitative nature of the residues of ammonium thiosulfate in apple is adequately understood. The requirement for residue studies was waived by EPA based on the knowledge that ammonium thiosulfate has been used as a soil applied and foliar applied fertilizer for many years. Prior experience and numerous publications teach that ammonium thiosulfate ionizes when placed into water, forming an ammonium ion and a thiosulfate ion which further degrades to form elemental sulfur and a sulfate ion. The sulfur is further oxidized to form a sulfate ion. The ammonium and sulfate ions thus formed are absorbed into the growing plant and moved into the naturally occurring nitrogen and sulfate pools that occur naturally in growing plants. Once applied to the plant, without isotope identification, it is not possible to separate the ammonium and sulfate ions that will occur from those that already occur naturally in the plant. On this basis, an exemption from the requirements of a tolerance is justified. There is no analytical method needed since there is no practical way to separate the ammonium and sulfate ions from those that naturally occur.

2. *Analytical method*. The need for an analytical method is waived on the basis that there is no need for analyzing for the component of ammonium and sulfate ion applied for blossom thinning purposes.

3. *Magnitude of residues*. No residues of ammonium thiosulfate will be identified separately from those ammonium and sulfate ions naturally occurring. This result supports the proposed exemption from the requirements for a tolerance.

B. Toxicological Profile

A request to waive the battery of mammalian toxicity studies for ammonium thiosulfate is based on and justified by the following:

1. *Acute toxicity*. Based on EPA criteria, ammonium thiosulfate previously registered for a non-food use as an ornamental herbicide has been shown to be relatively non-toxic and has been registered for non-food use purposes as a Category III herbicide. These data have previously been supplied to the agency.

2. *Genotoxicity*. A request for a waiver from the following requirements is made on the basis that sodium thiosulfate is on the FDA Generally Recognized as Safe (GRAS) list at 21 CFR 184.1807, and ammonium thiosulfate is already exempted from the requirements of a tolerance when used in accordance with good agricultural practices as inert (or occasionally active) ingredients in pesticide formulations applied to growing crops or to raw agricultural commodities after harvest (at 40 CFR 180.1001(c)). Ammonium thiosulfate ionizes to form ammonium ion and thiosulfate ion in water with neither of these ions being mutagenic or genotoxic. On that basis the following tests are requested to be waived.

i. Gene Mutation - Ames.

ii. *In vitro* Structural chromosomal aberration assay.

iii. *In vitro* CHO/HGPRT assay.

iv. *In vivo* micronucleus aberration assay.

3. *Reproductive and developmental toxicity*. A request for waiving the data requirements for the following is made on the basis listed above for ''B''. In addition, all of the tests listed below rely on feeding the test substance, to animals that have acidic stomachs. Placing ammonium thiosulfate into an acidic environment will cause near instantaneous ion formation giving rise to ammonium and thiosulfate ions, which ultimately breaks down to elemental sulfur and sulfite. These sulfur forms will be quickly oxidized under acidic conditions to sulfate, which will be incorporated into the normal sulfate pool that exists within the metabolic system of the various animal test systems. The ammonium ion will react with the acidic component, most likely forming ammonium chloride which will be metabolized in a well understood pathway in the systems of the various animal test systems. The new moiety formed in this acidic medium is the sulfite ion which also is well understood and is quickly oxidized to sulfate. The FDA instituted studies in 1975 and 1985 on the GRAS status of sulfite and, as a result of these studies, has substantiated the GRAS status except for a few individuals that might be allergic to sulfite. In this proposed usage however, the sulfite will not reach the possibly allergic people, since the sulfite will be metabolized to sulfate in the plant system before reaching any sensitive people who may consume the treated tissue. The data waivers requested are as follows:

i. Teratology in rats.

ii. Teratology in rabbits.

iii. 2–Generation reproduction in rats.

4. *Subchronic Toxicity*. The data requirements listed below are requested to be waived on the basis illustrated above at paragraph 3.

i. 28–Day dermal in rats.

ii. 13–Week oral feeding in rats.

iii. 90–Day oral feeding in dogs.

5. *Chronic toxicity*. The data requirements listed below are requested to be waived for reasons listed above at paragraph 3.

i. 1–Year chronic toxicity in dogs.

ii. 18–Month chronic toxicity & carcinogenicity in mice.

iii. 24–Month chronic toxicity & carcinogenicity in rats.

6. *Animal metabolism*. The metabolism of ammonium thiosulfate is well understood in animals. As listed above, this substance rapidly ionizes in the acidic portion of the animal gut, giving rise to ammonium ion and sulfate ion. Both of these substances are required and occur in the metabolism of animals.

7. *Metabolite toxicology*. No toxicologically significant metabolites will be detected in plant or animal metabolism studies using ammonium thiosulfate. Therefore, no metabolites are required to be regulated.

8. *Endocrine effects*. There is no information available that suggest that ammonium thiosulfate would be associated with endocrine effects.

C. Aggregate Exposure

1. *Dietary exposure—i. Food*. There will be no residues of ammonium thiosulfate that will reach any portion of the US population as a result of using ammonium thiosulfate as a blossom thinner on apples. The ammonium and sulfate ions that will arise will not be different from the naturally occurring forms of the ions, which exceed by far the amount that will be applied as a result of the use of the ammonium thiosulfate.

ii. *Drinking water*. Ammonium and sulfate ions that arise from ammonium thiosulfate use will add no additional burden to the drinking water. The end points of the two ions formed as a result of ammonium thiosulfate use will both be used in plant nutrition. The ammonium form of nitrogen resists leaching by binding to the colloid fraction in the soil to resist ground water contamination. The amount of sulfate added as a result of the described use will add an imperceptible amount to the sulfate level already in existence in the soil.

There is a reasonable certainty that no harm will result from dietary exposure to ammonium thiosulfate, because dietary exposures to residues on food cannot be differentiated from those that

will occur naturally in food, and exposure through drinking water is expected to be insignificant.

2. *Non-dietary exposure*. There is no non-dietary exposure expected, since any ammonium thiosulfate finding its way onto the plants or around any plants will be absorbed and metabolized into naturally occurring plant constituents.

D. Cumulative Effects

There are no cumulative effects expected since the ammonium thiosulfate metabolites are all incorporated into naturally occurring constituents found in all plant systems.

E. Safety Determination

1. *U.S. population*. The natural occurrence of the metabolites of the ammonium and sulfate ions in all plants and in humans is the basis for the Generally Recognized As Safe characterization of the thiosulfate ion and the use of the ammonium ion as a component in nearly all fertilizers, supports the conclusion that there is a ''reasonable certainty of no harm'' from aggregate exposure to ammonium thiosulfate.

2. *Infants and children*. No developmental, reproductive or fetotoxic effects have been associated with ammonium thiosulfate and its use as a fertilizer. The calculation of safety margins with respect to ammonium thiosulfate is unnecessary since the ammonium and sulfate ions that will arise from the use of ammonium thiosulfate will add only slightly to the already naturally occurring nitrogen and sulfur pools in existence in various plants. Since there will be no residues of toxicological significance resulting from ammonium thiosulfate, calculations of safety margins are not necessary based on the lack of any unnatural residues.

F. International Tolerances

There is no Codex maximum residue level established for ammonium thiosulfate on apple. However, ammonium thiosulfate is widely used as a nutrient in many parts of the world.

[FR Doc. 97–12472 Filed 5–12–97; 8:45 am]

BILLING CODE 6560–50–F

ENVIRONMENTAL PROTECTION AGENCY

[OPP–181046; FRL 5717–1]

Carbofuran; Receipt of Application for Emergency Exemption, Solicitation of Public Comment

AGENCY: Environmental Protection Agency (EPA).

ACTION: Notice.

SUMMARY: EPA has received a specific exemption request from the Arkansas State Plant Board (hereafter referred to as the ''Applicant'') to use the pesticide flowable Carbofuran (Furadan 4F Insecticide/Nematicide) (EPA Reg. No. 279–2876) to treat up to 1 million acres of cotton to control cotton aphids. The Applicant proposes the use of a chemical which has been the subject of a Special Review within EPA's Office of Pesticide Programs. The granular formulation of carbofuran was the subject of a Special Review between the years of 1986 – 1991, which resulted in a negotiated settlement whereby most of the registered uses of granular carbofuran were phased out. While the flowable formulation of carbofuran is not the subject of a Special Review, EPA believes that the proposed use of flowable carbofuran on cotton could pose a risk similar to the risk assessed by EPA under the Special Review of granular carbofuran. Therefore, in accordance with 40 CFR 166.24, EPA is soliciting public comment before making the decision whether or not to grant the exemption.

DATES: Comments must be received on or before May 28, 1997.

ADDRESSES: Three copies of written comments, bearing the identification notation ''OPP–181046,'' should be submitted by mail to: Public Information and Records Integrity Branch, Information Resources and Services Division (7506C), Office of Pesticide Programs, Environmental Protection Agency, 401 M St., SW., Washington, DC 20460. In person, bring comments to: Rm. 1132, Crystal Mall #2, 1921 Jefferson Davis Highway, Arlington, VA.

Comments and data may also be submitted electronically by following the instructions under ''SUPPLEMENTARY INFORMATION.'' No Confidential Business Information (CBI) should be submitted through e-mail.

Information submitted in any comment concerning this notice may be claimed confidential by marking any part or all of that information as CBI. Information so marked will not be disclosed except in accordance with procedures set forth in 40 CFR part 2. A copy of the comment that does not contain CBI must be provided by the submitter for inclusion in the public record. Information not marked confidential may be disclosed publicly by EPA without prior notice. All written comments filed pursuant to this notice will be available for public inspection in Rm. 1132, Crystal Mall No. 2, 1921 Jefferson Davis Highway, Arlington, VA, from 8:30 a.m. to 4 p.m., Monday through Friday, except legal holidays.

FOR FURTHER INFORMATION CONTACT: By mail: David Deegan, Registration Division (7505W), Office of Pesticide Programs, Environmental Protection Agency, 401 M St., SW., Washington, DC 20460. Office location, telephone number and e-mail: Floor 6, Crystal Station #1, 2800 Jefferson Davis Highway, Arlington, VA, (703) 308–8327; e-mail: deegan.dave@epamail.epa.gov.

SUPPLEMENTARY INFORMATION: Pursuant to section 18 of the Federal Insecticide, Fungicide, and Rodenticide Act (FIFRA) (7 U.S.C. 136p), the Administrator may, at her discretion, exempt a state agency from any registration provision of FIFRA if she determines that emergency conditions exist which require such exemption. The Applicant has requested the Administrator to issue a specific exemption for the use of carbofuran on cotton to control aphids. Information in accordance with 40 CFR part 166 was submitted as part of this request.

As part of this request, the Applicant asserts that the state of Arkansas is likely to experience a non-routine infestation of aphids during the 1997 cotton growing season. The applicant further claims that, without a specific exemption of FIFRA for the use of flowable carbofuran on cotton to control cotton aphids, cotton growers in much of the state will suffer significant economic losses. The applicant also details a use program designed to minimize risks to pesticide handlers and applicators, non-target organisms (both Federally-listed endangered species, and non-listed species), and to reduce the possibility of drift and runoff.

The applicant proposes to make no more than two applications at the rate of 0.25 lb. active ingredient [(a.i.)], (8 fluid oz.) in a minimum of 2 gallons of finished spray per acre by air, or 10 gallons of finished spray per acre by ground application. The total maximum proposed use during the 1996 growing season (June 1, 1997 until September 30, 1997) would be 0.5 lb. a.i. (16 fluid oz.) per acre. The applicant proposes that

the maximum acreage which could be treated under the requested exemption would be 1 million acres, and states that one-half of the total requested acreage may require the second application of carbofuran. Therefore, the total amount of active ingredient that the applicant may use, should this exemption be granted, would be 375,000 lbs. during the 1997 use season.

This notice does not constitute a decision by EPA on the application itself. The regulations governing section 18 require publication of a notice of receipt of an application for a specific exemption proposing use of a chemical (i.e., an active ingredient) which has been the subject of a Special Review within EPA's Office of Pesticide Programs, and the proposed use could pose a risk similar to the risk assessed by EPA under the previous Special Review. Such notice provides for opportunity for public comment on the application.

The official record for this notice, as well as the public version, has been established for this notice under docket number [OPP–181046] (including comments and data submitted electronically as described below). A public version of this record, including printed, paper versions of electronic comments, which does not include any information claimed as CBI, is available for inspection from 8:30 a.m. to 4 p.m., Monday through Friday, excluding legal holidays. The official notice record is located at the address in ''ADDRESSES'' at the beginning of this document.

Electronic comments can be sent directly to EPA at:
opp-docket@epamail.epa.gov

Electronic comments must be submitted as an ASCII file avoiding the use of special characters and any form of encryption. Comment and data will also be accepted on disks in Wordperfect 5.1 file format or ASCII file format. All comments and data in electronic form must be identified by the docket number [OPP–181046]. Electronic comments on this notice may be filed online at many Federal Depository Libraries.

The Agency, accordingly, will review and consider all comments received during the comment period in determining whether to issue the emergency exemption requested by the Arkansas State Plant Board.

List of Subjects

Environmental protection, Pesticides and pests, Emergency exemptions.

Dated: May 1, 1997.

James Jones,

Acting Director, Registration Division, Office of Pesticide Programs.

[FR Doc. 97–12473 Filed 5–12–97; 8:45 am]

BILLING CODE 6560–50–F

ENVIRONMENTAL PROTECTION AGENCY

[FR–5824–8]

Proposed Prospective Purchaser Agreement, Pursuant to the Comprehensive Environmental Response, Compensation and Liability Act for the Autodeposition Site in Chicago, Illinois

AGENCY: U.S. Environmental Protection Agency (''U.S. EPA'').

ACTION: Proposal of prospective purchaser agreement pursuant to the Comprehensive Environmental Response, Compensation and Liability Act for the Autodeposition Site in Chicago, Illinois.

SUMMARY: In accordance with the Comprehensive Environmental Response, Compensation and Liability Act of 1980, as amended (''CERCLA''), 42 U.S.C. § 9601, *et seq.*, notice is hereby given that a proposed prospective purchaser agreement for the Autodeposition Site in Chicago, Illinois has been executed by Greenfield Partners, Ltd. (''Greenfield''). The agreement has been submitted to the Attorney General for approval. The proposed prospective purchaser agreement would resolve certain potential claims of the United States under Sections 106 and 107 of CERCLA, 42 U.S.C. §§ 9606 and 9607, and Section 7003 of the Solid Waste Disposal Act, as amended, 42 U.S.C. § 6973, against Greenfield. The proposed settlement would require Greenfield to perform work at the Site valued at approximately $140,000.

DATES: Comments on the proposed prospective purchaser agreement must be received by U.S. EPA on or before June 12, 1997. If requested prior to the expiration of this public comment period, U.S. EPA will provide an opportunity for a public meeting in the affected area.

ADDRESSES: A copy of the proposed prospective purchaser agreement is available for review at U.S. EPA, Region 5, 77 West Jackson Boulevard, Chicago, Illinois 60604. Please contact Andrew Warren at (312) 353–5485, prior to visiting the Region 5 office.

Comments on the proposed prospective purchaser agreement should be addressed to Andrew Warren, Office of Regional Counsel, U.S. EPA, Region 5, 77 West Jackson Boulevard (Mail Code C–29A), Chicago, Illinois 60604.

FOR FURTHER INFORMATION CONTACT:

Andrew Warren at (312) 353–5485, of the U.S. EPA Region 5 Office of Regional Counsel.

A 30-day period, commencing on the date of publication of this notice, is open for comments on the proposed prospective purchaser agreement. Comments should be sent to the addressee identified in this notice.

Michelle D. Jordan,

Regional Administrator, U.S. Environmental Protection Agency, Region 5.

[FR Doc. 97–12478 Filed 5–12–97; 8:45 am]

BILLING CODE 6560–50–M

FEDERAL RESERVE SYSTEM

Change in Bank Control Notices; Acquisitions of Shares of Banks or Bank Holding Companies

The notificants listed below have applied under the Change in Bank Control Act (12 U.S.C. 1817(j)) and § 225.41 of the Board's Regulation Y (12 CFR 225.41) to acquire a bank or bank holding company. The factors that are considered in acting on the notices are set forth in paragraph 7 of the Act (12 U.S.C. 1817(j)(7)).

The notices are available for immediate inspection at the Federal Reserve Bank indicated. Once the notices have been accepted for processing, they will also be available for inspection at the offices of the Board of Governors. Interested persons may express their views in writing to the Reserve Bank indicated for that notice or to the offices of the Board of Governors. Comments must be received not later than May 27, 1997.

A. Federal Reserve Bank of Kansas City (D. Michael Manies, Assistant Vice President) 925 Grand Avenue, Kansas City, Missouri 64198-0001:

1. Reich Family Limited Partnership, Kansas City, Missouri, and general partners Carolyn Reich Weir, Independence, Missouri, and Nancy Reich Esry, Sarasota, Florida; to acquire an additional 12 percent, for a total of 34 percent, of the voting shares of Blue Ridge Bancshares, Inc., Kansas City, Missouri, and thereby indirectly acquire Blue Ridge Bank and Trust Co., Kansas City, Missouri.

Board of Governors of the Federal Reserve System, May 7, 1997.

Jennifer J. Johnson,

Deputy Secretary of the Board.

[FR Doc. 97–12449 Filed 5–12–97; 8:45 am]

BILLING CODE 6210–01–F

FEDERAL RESERVE SYSTEM

Formations of, Acquisitions by, and Mergers of Bank Holding Companies

The companies listed in this notice have applied to the Board for approval, pursuant to the Bank Holding Company Act of 1956 (12 U.S.C. 1841 *et seq.*) (BHC Act), Regulation Y (12 CFR Part 225), and all other applicable statutes and regulations to become a bank holding company and/or to acquire the assets or the ownership of, control of, or the power to vote shares of a bank or bank holding company and all of the banks and nonbanking companies owned by the bank holding company, including the companies listed below.

The applications listed below, as well as other related filings required by the Board, are available for immediate inspection at the Federal Reserve Bank indicated. Once the application has been accepted for processing, it will also be available for inspection at the offices of the Board of Governors. Interested persons may express their views in writing on the standards enumerated in the BHC Act (12 U.S.C. 1842(c)). If the proposal also involves the acquisition of a nonbanking company, the review also includes whether the acquisition of the nonbanking company complies with the standards in section 4 of the BHC Act. Unless otherwise noted, nonbanking activities will be conducted throughout the United States.

Unless otherwise noted, comments regarding each of these applications must be received at the Reserve Bank indicated or the offices of the Board of Governors not later than June 6, 1997.

A. Federal Reserve Bank of Minneapolis (Karen L. Grandstrand, Vice President) 250 Marquette Avenue, Minneapolis, Minnesota 55480-2171:

1. Stearns Financial Services, Inc., Employee Stock Ownership Plan, St. Cloud, Minnesota, and Stearns Financial Services, Inc., St. Cloud, Minnesota; to acquire 80 percent of the voting shares of Arizona Community Bank of Scottsdale, Scottsdale, Arizona, a *de novo* bank.

B. Federal Reserve Bank of San Francisco (Pat Marshall, Manager of Analytical Support, Consumer Regulation Group) 101 Market Street, San Francisco, California 94105-1579:

1. Zions Bancorporation, Salt Lake City, Utah; to acquire 100 percent of the voting shares of Tri-State Bank, Montpelier, Idaho.

Board of Governors of the Federal Reserve System, May 7, 1997.

Jennifer J. Johnson,

Deputy Secretary of the Board.

[FR Doc. 97–12450 Filed 5–12–97; 8:45 am]

BILLING CODE 6210–01–F

FEDERAL RESERVE SYSTEM

Notice of Proposals to Engage in Permissible Nonbanking Activities or to Acquire Companies that are Engaged in Permissible Nonbanking Activities

The companies listed in this notice have given notice under section 4 of the Bank Holding Company Act (12 U.S.C. 1843) (BHC Act) and Regulation Y, (12 CFR Part 225) to engage *de novo*, or to acquire or control voting securities or assets of a company that engages either directly or through a subsidiary or other company, in a nonbanking activity that is listed in § 225.28 of Regulation Y (12 CFR 225.28) or that the Board has determined by Order to be closely related to banking and permissible for bank holding companies. Unless otherwise noted, these activities will be conducted throughout the United States.

Each notice is available for inspection at the Federal Reserve Bank indicated. Once the notice has been accepted for processing, it will also be available for inspection at the offices of the Board of Governors. Interested persons may express their views in writing on the question whether the proposal complies with the standards of section 4 of the BHC Act.

Unless otherwise noted, comments regarding the applications must be received at the Reserve Bank indicated or the offices of the Board of Governors not later than May 27, 1997.

A. Federal Reserve Bank of Cleveland (Jeffrey Hirsch, Banking Supervisor) 1455 East Sixth Street, Cleveland, Ohio 44101-2566:

1. Mellon Bank Corporation, Pittsburgh, Ohio; to acquire Buck Consultants, Inc., New York, New York, and thereby engage in employee benefits consulting activities, pursuant to § 225.28(b)(9)(ii) of the Board's Regulation Y.

Board of Governors of the Federal Reserve System, May 7, 1997.

Jennifer J. Johnson,

Deputy Secretary of the Board.

[FR Doc. 97–12443 Filed 5–12–97; 8:45 am]

BILLING CODE 6210–01–F

FEDERAL RESERVE SYSTEM

Sunshine Act Meeting

AGENCY HOLDING THE MEETING: Board of Governors of the Federal Reserve System.

TIME AND DATE: 12:00 noon, Monday, May 19, 1997.

PLACE: Marriner S. Eccles Federal Reserve Board Building, C Street entrance between 20th and 21st Streets, N.W., Washington, D.C. 20551.

STATUS: Closed.

MATTERS TO BE CONSIDERED:

1. Personnel actions (appointments, promotions, assignments, reassignments, and salary actions) involving individual Federal Reserve System employees.
2. Any items carried forward from a previously announced meeting.

CONTACT PERSON FOR MORE INFORMATION: Mr. Joseph R. Coyne, Assistant to the Board; (202) 452–3204. You may call (202) 452–3207, beginning at approximately 5 p.m. two business days before this meeting, for a recorded announcement of bank and bank holding company applications scheduled for the meeting.

Dated: May 9, 1997.

Jennifer J. Johnson,

Deputy Secretary of the Board.

[FR Doc. 97–12690 Filed 5–9–97; 2:54 pm]

BILLING CODE 6210–01–P

DEPARTMENT OF HEALTH AND HUMAN SERVICES

Centers for Disease Control and Prevention

[Announcement Number 776]

Cooperative Agreements for Studies To Evaluate Primary Prevention of Childhood Lead Poisoning Notice of Availability of Funds for Fiscal Year 1997

Introduction

The Centers for Disease Control and Prevention (CDC) announces the availability of fiscal year (FY) 1997 funds for a cooperative agreement program to conduct studies to evaluate the costs and effectiveness of primary prevention of childhood lead poisoning.

CDC is committed to achieving the health promotion and disease prevention objectives of Healthy People 2000, a national activity to reduce morbidity and mortality and improve the quality of life. This announcement is related to the priority area of Environmental Health. (For ordering a copy of Healthy People 2000, see the

section **WHERE TO OBTAIN ADDITIONAL INFORMATION.**)

Authority

This program is authorized under sections 301(a), 317A and 317B of the Public Health Service Act [42 U.S.C. 241(a), 247b-1 and 247b-3] as amended. Program regulations are set forth in 42 CFR Part 51b.

Smoke-Free Workplace

CDC strongly encourages all cooperative agreement recipients to provide a smoke-free workplace and promote the non-use of all tobacco products, and Public Law 103–227, the Pro-Children Act of 1994, prohibits smoking in certain facilities that receive Federal funds in which education, library, day care, health care, and early childhood development services are provided to children.

Eligible Applicants

Applications may be submitted by public and private, nonprofit organizations and governments and their agencies. Thus, universities, colleges, research institutions, hospitals, other public and private non-profit organizations, State and local governments or their bona fide agents, including small, minority-and/or women-owned non-profit businesses are eligible to apply.

An organization described in section 501(c)(4) of the Internal Revenue Code of 1986 which engages in lobbying activities shall not be eligible to receive Federal funds constituting an award, grant, loan, or any other form.

Applications will be considered for funding to conduct studies in one or more programmatic interest areas. The programmatic interest area(s) should be clearly indicated for each study on a cover letter submitted with the application.

Availibility of Funds

Approximately $500,000 is available in FY 1997 to fund up to two cooperative agreements. It is expected that the average award will be $250,000 (direct and indirect cost). It is expected that the awards will begin on or about September 30, 1997. The awards will be made for 12-month budget periods within a project period up to 4 years. Funding estimates may vary and are subject to change based on the availability of funds.

Continuation awards within the project period will be made on the basis of satisfactory progress and the availability of funds.

Use of Funds

Grant funds may not be expended for medical care and treatment or for environmental remediation of lead sources.

Eligible applicants may enter into contracts, including consortia agreements, as necessary to meet the requirements of the program and strengthen the overall application; however, applicants must perform a substantial portion of the activities for which funds are requested.

Restrictions on Lobbying

Applicants should be aware of restrictions on the use of HHS funds for lobbying of Federal or State legislative bodies. Under the provisions of 31 U.S.C. Section 1352 (which has been in effect since December 23, 1989), recipients (and their subtier contractors) are prohibited from using appropriated Federal funds (other than profits from a Federal contract) for lobbying Congress or any Federal agency in connection with the award of a particular contract, grant, cooperative agreement, or loan. This includes grants/cooperative agreements that, in whole or in part, involve conferences for which Federal funds cannot be used directly or indirectly to encourage participants to lobby or to instruct participants on how to lobby.

In addition, the FY 1997 HHS Appropriations Act, which became effective October 1, 1996, expressly prohibits the use of 1997 appropriated funds for indirect or ''grass roots'' lobbying efforts that are designed to support or defeat legislation pending before State legislatures. This new law, Section 503 of Pub. L. 104–208, provides as follows:

Sec. 503(a). No part of any appropriation contained in this Act shall be used, other than for normal and recognized executive-legislative relationships, for publicity or propaganda purposes, for the preparation, distribution, or use of any kit, pamphlet, booklet, publication, radio, television, or video presentation designed to support or defeat legislation pending before the Congress, * * * except in presentation to the Congress or any State legislative body itself.

(b) No part of any appropriation contained in this Act shall be used to pay the salary or expenses of any grant or contract recipient, or agent acting for such recipient, related to any activity designed to influence legislation or appropriations pending before the Congress or any State legislature.

Department of Labor, Health and Human Services, and Education, and Related Agencies Appropriations Act, 1997, as enacted by the Omnibus Consolidated Appropriations Act, 1997, Division A, Title I, Section 101(e), Pub. L. 104–208 (September 30, 1996).

Background and Definitions

The adverse health effects of lead on young children can be profound. Lower levels of lead, which rarely cause symptoms, can result in decreased intelligence, developmental disabilities, behavioral disturbances, and disorders of blood production. It is estimated that in the United States nearly one million children younger than 6 years old have blood levels high enough to cause adverse health effects. Lead poisoning affects children of all socioeconomic strata, racial/ethnic groups, and regions of the country; however, children who are minorities, are residents of central cities, live in older housing, or live in households with lower income are at higher risk for lead poisoning.

In February 1991, HHS released the document, Strategic Plan for the Elimination of Childhood Lead Poisoning, which described the goals and objectives of CDC to eliminate this disease. The strategic plan focuses heavily on lead-based paint because of its key role in lead poisoning and because of the limited nature of previous efforts to reduce this source of lead. However, a national plan to eliminate childhood lead poisoning must focus on other sources and pathways of lead exposure that contribute significantly to children's blood lead levels. Continued efforts to identify and reduce these sources and pathways of lead exposure will result in lower average blood lead levels in the United States and will further diminish the likelihood of lead poisoning developing even in children exposed to a high-dose source.

In general, blood lead levels of infants begin to correlate with the amount of lead contamination in their environments when the infants reach crawling age and their mobility puts them in contact with household dust, paint, and soil. By the time older infants and toddlers have been identified with elevated blood lead levels, often between 12 and 24 months of age, they have already begun to accumulate high body burdens of lead and have had substantial periods of exposure to levels of lead potentially harmful to the developing nervous system. Thus, long periods of lead exposure prior to initiating an intervention may reduce the impact of the intervention on blood lead levels and neurobehavioral outcomes. For these reasons, it may be desirable to initiate interventions in

children at high risk for lead exposure at 6 months or younger.

Definitions

Primary prevention refers to the prevention of lead exposure among children who have not yet developed elevated blood lead levels at the time of initiation of prevention measures.

Purpose

The purposes of these awards are to (1) Study important epidemiologic questions critical to the implementation, operation, and expansion of childhood lead poisoning primary prevention programs; and (2) to support the development of guidelines and directives. Specifically, the purpose is to evaluate the feasibility, costs, and effectiveness (in terms of average blood levels and the proportion of children with elevated blood lead levels as measured in children 12 to 24 months of age) of various strategies for primary prevention among young children (6 months of age or younger at study initiation) who are at high risk for lead exposure.

Programmatic Interest Areas

Studies must be in one of the following areas:

1. Evaluation of primary prevention through environmental intervention.
2. Evaluation of primary prevention through educational intervention.
3. Evaluation of primary prevention through nutritional intervention.

Applicants are encouraged to work collaboratively with health, housing, and environmental government agencies and community-based organizations.

Application Content

Please prepare your application following the instructions in the PHS–398. Please include the following:

1. Identify a director who has specific authority and responsibility to carry out the requirements of the project.
2. Demonstrate ability to collect and analyze data on cost and effectiveness needed to fulfill the study objectives.
3. Demonstrate ability to describe in detail the materials, activities, and administrative arrangements that constitute the intervention and the way in which the program will be delivered.
4. Demonstrate ability to evaluate the effectiveness of the program as measured by blood lead levels in children 12 to 24 months of age.
5. Demonstrate ability to accurately assess the intervention costs and differentiate these costs from those of the research study.
6. Demonstrate experience in conducting relevant epidemiologic studies, including publication of original research in peer-reviewed journals.
7. Demonstrate effective and well-defined working relationships within the performing organization and with outside entities which will ensure implementation of the proposed study.
8. Demonstrate access to a laboratory with demonstrated proficiency in performing blood lead (and other laboratory measurements as indicated in the applicant's study protocol).
9. Demonstrate ability to ensure that children identified with elevated blood levels receive appropriate medical and environmental management through an ongoing childhood lead poisoning prevention program (which need *not* be applicant's organization).
10. Provide assurance that, when appropriate, referrals and other appropriate measures will be taken to ensure that children receive household environmental assessments and interventions that are consistent with applicable health and housing regulations and the community standard of care. If the applicant does not have direct responsibility for such activities, a letter of support from the organization with that responsibility is required.

Cooperative Activities

In conducting activities to achieve the purpose of these cooperative agreements, the recipient will be responsible for conducting activities under A. (Recipient Activities), and CDC will be responsible for conducting activities under B. (CDC Activities):

A. Recipient Activities

1. Conduct study activities, including: (1) Enrolling eligible study subjects, after obtaining informed consent; (2) collection, analysis, and interpretation of collected data; (3) ensuring appropriate medical and environmental management of study subjects; (4) evaluation of project during implementation of study and after completion of study; and (5) all other components required for implementation of the study.
2. Enter and maintain data in a computerized database.
3. Analyze collected data and prepare and publish a report of the study findings.

B. CDC Activities

1. Collaborate with the recipient in refining the approved study protocol and the data collection instrument(s), as appropriate.
2. Provide technical advice on data collection and management.
3. Assist in assessment of quality of laboratory measurements, if needed.

Technical Reporting Requirements

Annual progress reports in a CDC-approved format are required of all cooperative agreement recipients. Timelines for the annual reports will be established at the time of award. The narrative progress reports must include the following for each goal or activity involved in the study: (1) A comparison of actual accomplishments to the goals established for the period; (2) the reasons for slippage if established goals were not met; and (3) other pertinent information and data essential to evaluating progress and findings of the study.

The Financial Status Report is required no later than 90 days after the end of the budget period. A final progress report and financial status report are required no later than 90 days after the end of the project period. Submit the original and two copies of the reports to the Grants Management Branch, CDC.

Evaluation Criteria

Applications will be reviewed and evaluated according to the following criteria:

1. Study Protocol (35%)

The protocol's scientific soundness (including adequate sample size with power calculations), quality, feasibility, consistency with the project goals, and soundness of the evaluation plan (which should provide sufficient detail regarding the way in which the program will be implemented to facilitate replication of the program).

2. Access to Study Subjects (20%)

Documented ability to identify, access, enroll, and follow high-risk study subjects. The degree to which the applicant has met the CDC policy requirements regarding the inclusion of women, ethnic, and racial groups in the proposed research. This includes: (a) The proposed plan for the inclusion of both sexes and racial and ethnic minority populations for appropriate representation; (b) the proposed justification when representation is limited or absent; (c) a statement as to whether the design of the study is adequate to measure differences when warranted; and (d) a statement as to whether the plans for recruitment and outreach for study participants include the process of establishing partnerships with community(ies) and recognition of mutual benefits.

3. Environmental, Educational, and Medical Intervention (15%)

Ability to provide environmental and educational interventions before infants are exposed to potential lead hazards. Documented ability to ensure that children identified with elevated blood lead levels receive appropriate medical and environmental management.

4. Project Personnel (15%)

The qualifications, experience, (including experience in conducting relevant studies) and time commitment of the staff needed to ensure implementation of the project.

5. Laboratory Capacity (10%)

Documented availability to a laboratory with demonstrated proficiency in performing lead measurements (and other laboratory measurements as indicated in applicant's proposed study).

6. Performance Measurement (5%)

Schedule for implementing and monitoring the project. The extent to which the application documents specific, attainable, and realistic goals and clearly indicates the performance measures that will be monitored, how they will be monitored, and with what frequency. This section should contain enough detail to determine at the end of each budget year, the extent to which the project is on target in completing the study process and outcome objectives.

7. Budget Justification (not scored)

The budget will be evaluated for the extent to which it is reasonable, clearly justified, and consistent with the intended use of cooperative agreement funds.

8. Human Subjects (not scored)

The extent to which the applicant complies with the Department of Health and Human Services Regulations (45 CFR Part 46) regarding the protection of human subjects.

Executive Order 12372 Review

Applications are not subject to the review requirements of Executive Order 12372.

Public Health System Reporting Requirement

This program is not subject to the Public Health System Reporting Requirements.

Catalog of Federal Domestic Assistance Number

The Catalog of Federal Domestic Assistance number assigned to this program is 93.283.

Other Requirements

Paperwork Reduction Act

Projects that involve the collection of information from ten or more individuals and funded by this cooperative agreement will be subject to review by the Office of Management and Budget (OMB) under the Paperwork Reduction Act.

Human Subjects

If the proposed project involves research on human subjects, the applicant must comply with the Department of Health and Human Services Regulations (45 CFR part 46) regarding the protection of human subjects. Assurance must be provided to demonstrate that the project will be subject to initial and continuing review by an appropriate institutional review committee. The applicant will be responsible for providing assurance in accordance with the appropriate guidelines and form provided in the application kit.

Women and Minority Inclusion Policy

It is the policy of the CDC to ensure that women and racial and ethnic groups will be included in CDC supported research projects involving human subjects, whenever feasible and appropriate. Racial and ethnic groups are defined in OMB Directive No. 15 and include American Indian, Alaskan Native, Asian, Pacific Islander, Black and Hispanic. Applicants shall ensure that women, racial and ethnic minority populations are appropriately represented in applications for research involving human subjects. Where a clear and compelling rationale exists that inclusion is inappropriate or not feasible, this situation must be explained as part of the application.

In conducting the review of applications for scientific merit, review groups will evaluate proposed plans for inclusion of minorities and both sexes as part of the scientific assessment and assigned score. This policy does not apply to research studies when the investigator cannot control the race, ethnicity and/or sex of subjects. Further guidance to this policy is contained in the **Federal Register**, Vol. 60, No. 179, Friday, September 15, 1995, pages 47947–47951.

Application Submission and Deadline

A. Preapplication Letter of Intent

Although not a prerequisite of application, a non-binding letter of intent-to-apply is requested from potential applicants. The letter should be submitted to the Grants Management Officer (whose address is reflected in section B, ''Applications''). It should be postmarked no later than one month prior to the planned submission deadline (e.g., June 16 for July 16 submission). The letter should identify the announcement number, the intended submission deadline, name the principal investigator, and specify the study area addressed by the proposed project.

The letter of intent does not influence review of funding decisions, but it will enable CDC to plan the review more efficiently, and will ensure that each applicant receives timely and relevant information prior to application submission.

B. Applications

Applicants should use Form PHS–398 (OMB No. 0925–0001 Revised 5/95) and adhere to the ERRATA Instruction Sheet for form PHS–398 contained in the grant application kit. Please submit an original and five copies on or before July 16, 1997, to Lisa Tamaroff, Grants Management Specialist, Grants Management Branch, Procurement and Grants Office, Centers for Disease Control and Prevention (CDC), 255 East Paces Ferry Road, NE., Room 321, Atlanta, GA 30305, telephone (404) 842–6796.

C. Deadline

1. Applications shall be considered as meeting the deadline if they are either:

A. Received on or before the deadline date, or

B. Sent on or before the deadline date and received in time for submission for the review process. Applicants must request a legibly dated U.S. Postal Service postmark or obtain a legibly dated receipt from a commercial carrier or U.S. Postal Service. Private metered postmarks shall not be acceptable as proof of timely mailing.

2. Late Applications

Applications which do not meet the criteria in 1.A. or 1.B. above are considered late applications. Late applications will not be considered and will be returned to the applicant.

Where to Obtain Additional Information

To receive additional written information call (404) 332–4561. You will be asked to leave your name, address, and telephone number and will need to refer to Announcement 776. You will receive a complete program description, information on application procedures, and application forms.

If you have questions after reviewing the contents of all documents, business management technical assistance may

be obtained from Lisa Tamaroff, Grants Management Specialist, Grants Management Branch, Procurement and Grants Office, Centers for Disease Control and Prevention (CDC), 255 East Paces Ferry Road, NE., Room 321, Mailstop E–13, Atlanta, GA 30305, telephone (404) 842–6796, or Internet lgt1@cdc.gov.

Programmatic technical assistance may be obtained from Alan B. Bloch, M.D., M.P.H. , Lead Poisoning Prevention Branch, Division of Environmental Hazards and Health Effects, National Center for Environmental Health, Centers for Disease Control and Prevention (CDC), 4770 Buford Highway, NE., Mailstop F–42, Atlanta, GA 30341–3724, telephone (770) 488–7330, or Internet abb1@cdc.gov.

Please refer to Announcement Number 776 when requesting information and submitting an application.

This and other CDC announcements are also available through the CDC home page on the Internet. The address for the CDC home page is http://www.cdc.gov.

CDC will not send application kits by facsimile or express mail.

Potential applicants may obtain a copy of ''Healthy People 2000'' (Full Report, Stock No. 017–001–00474–0) or ''Healthy People 2000'' (Summary Report, Stock No. 017–001-00473–1) through the Superintendent of Documents, Government Printing Office, Washington, DC 20402–9325, telephone (202) 512–1800.

To receive a free copy of the Strategic Plan for the Elimination of Childhood Lead Poisoning, call toll-free 1–888–232–6789 and leave name, address, and telephone number.

Dated: May 7, 1997.

Joseph R. Carter,

Acting Associate Director for Management and Operations, Centers for Disease Control and Prevention (CDC).

[FR Doc. 97–12455 Filed 5–12–97; 8:45 am]

BILLING CODE 4163–18–P

DEPARTMENT OF HEALTH AND HUMAN SERVICES

Centers for Disease Control and Prevention

Chronic Fatigue Syndrome Coordinating Committee: Meeting

In accordance with section 10(a)(2) of the Federal Advisory Committee Act (Pub. L. 92–463), the Centers for Disease Control and Prevention (CDC) announces the following committee meeting:

Name: Chronic Fatigue Syndrome Coordinating Committee (CFSCC).

Time and Date: 10 a.m.–12 noon, 1:30–5 p.m., May 29, 1997.

Place: Room 503A, Hubert H. Humphrey Building, 200 Independence Avenue, SW, Washington, DC 20201.

Status: Open to the public, limited only by the space available. The meeting room will accommodate 85 people.

Purpose: The Committee is charged with providing advice to the Secretary, the Assistant Secretary for Health, and the Commissioner, Social Security Administration (SSA) to assure interagency coordination and communication regarding chronic fatigue syndrome (CFS) research and other related issues; facilitating increased Department of Health and Human Services (HHS) and agency awareness of CFS research and educational needs; developing complementary research programs that minimize overlap; identifying opportunities for collaborative and/or coordinated efforts in research and education; and developing informed responses to constituency groups regarding HHS and SSA efforts and progress.

Matters to be Discussed: Agenda items will include defining the scope and mission of the Chronic Fatigue Syndrome Coordinating Committee; review of an approach to the current disease name; prioritization of education of the physician/provider population; disability issues; therapeutic agents and their assessment; measurement of functional activity; and pediatric CFS.

Agenda items are subject to change as priorities dictate.

Public comments will be received at the meeting for approximately 90 minutes. Persons wishing to make oral comments should notify the Executive Secretary, Lisa Blake-DiSpigna, by fax (404/639–4138) or by telephone (404/639–3227) no later than the close of business on May 23, 1997. All requests to make oral comments should contain the name, address, telephone number, and organizational affiliation of the presenter. These comments will become a part of the official record of the meeting. Due to the time available, public comments will be limited to five minutes per person.

Notice: In the interest of security, the Department has instituted stringent procedures for entrance to the Hubert H. Humphrey Building by non-government employees. Thus, persons without a government identification card will need to provide a photo ID and know the subject and room number of the meeting in order to be admitted into the building. Visitors must use the Independence Avenue entrance.

Contact Person for More Information: Renee Ross, Division of Viral and Rickettsial Diseases, National Center for Infectious Diseases, CDC, 1600 Clifton Road, NE, MS A30, Atlanta, Georgia 30333, telephone 404/639–3574.

Dated: May 7, 1997.

Nancy C. Hirsch,

Acting Director, Management Analysis and Services Office Centers for Disease Control and Prevention (CDC).

[FR Doc. 97–12457 Filed 5–12–97; 8:45 am]

BILLING CODE 4163–18–P

DEPARTMENT OF HEALTH AND HUMAN SERVICES

Administration for Children and Families

Agency Recordkeeping/Reporting Requirements Under Emergency Review by the Office of Management and Budget (OMB)

Title: Native Employment Works (NEW) Program Abbreviated Preprint.

OMB No.: New.

Description: The purpose of this document is to determine whether the interim tribal plan is complete and will fulfill its' intended purpose, goals and objectives to provide work activities. The plan will provide an outline of how the Tribe's program will be administered and operated. It is used to provide the public with information about the program.

Respondents: States, Puerto Rico, Guam and the District of Columbia.

Annual Burden Estimates:

Instrument	Number of respondents	Number of responses per respondent	Average burden hours per response	Total burden hours
Preprint	77	1	16	1,232

Estimated Total Annual Burden Hours: 1,232.

Additional Information: ACF is requesting that OMB grant a 180 day approval for this information collection under procedures for emergency processing by May 14, 1997. A copy of this information collection, with applicable supporting documentation, may be obtained by calling the Administration for Children and

Families, Reports Clearance Officer, Larry Guerrero at (202) 401–6465.

Comments and questions about the information collection described above should be directed to the Office of Information and Regulatory Affairs, Attn: OMB Desk Officer for ACF, Office of Management and Budget, Paperwork Reduction Project, 725 17th Street NW., Washington, DC 20503, (202) 395–7316.

Dated: May 7, 1997.

Bob Sargis,

Acting Reports Clearance Officer.

[FR Doc. 97–12421 Filed 5–12–97; 8:45 am]

BILLING CODE 4184–01–M

DEPARTMENT OF HEALTH AND HUMAN SERVICES

Food and Drug Administration

System Suitability for Chromatographic Analysis; Public Workshop

AGENCY: Food and Drug Administration, HHS.

ACTION: Notice of public workshop.

SUMMARY: The Food and Drug Administration's (FDA's) (Office of Regulatory Affairs (ORA)) is announcing a public workshop on system suitability for chromatographic analysis. FDA is co-sponsoring this public workshop with the New York-New Jersey Section of the Association of Official Analytical Chemists (NY-NJ AOAC) International. This public workshop is designed to promote discussion of laboratory practices and procedures for system suitability for chromatographic analysis.

DATES: The public workshop will be held on Monday, June 9, 1997, from 9 a.m. to 4 p.m. The deadline for registration is June 2, 1997.

ADDRESSES: The public workshop will be held at Hoffmann-LaRoche, Inc., Bldg.76, Auditorium, 340 Kingsland St., Nutley, NJ 07110.

FOR FURTHER INFORMATION CONTACT:

Regarding general information: Elise A. Murphy, Office of Regulatory Affairs (HFC–141), Food and Drug Administration, 5600 Fishers Lane, Rockville, MD 20857, 301–443–3007.

Regarding registration and workshop information: Alexander MacDonald, NY-NJ AOAC Section, c/o Pharma Science, Inc., 16 Cypress Ave., North Caldwell, NJ 07006, 201–228–2392, FAX 201–228–3498, or e-mail ''BeeMac201@aol.com''.

The registration fee for the public workshop is $40.00. Those persons interested in attending this meeting should send their registration fee and FAX their registration, including name(s), firm name, address, telephone number, FAX number, and any specific questions about the workshop to Alexander MacDonald (address above) by June 2, 1997. Make checks payable to NY-NJ AOAC, attention: Dr. MacDonald. Advance registration is required. There will be no on-site registration. Space is limited and all interested parties are encouraged to register early.

SUPPLEMENTARY INFORMATION: This public workshop, which is co-sponsored with NY-NJ AOAC, is designed to promote the discussion of laboratory practices and procedures for system suitability for chromatographic analysis. This topic was selected by the attendees at the November 20, 1996, public meeting held by FDA in Rockville, MD. AOAC International is an independent association of scientists from the public and private sectors devoted to promoting methods validation and quality measurements in the analytical sciences. NY-NJ AOAC will be assisting with the agenda, speakers, and administrative functions for the meeting. Representatives from ORA's Division of Field Science, the Center for Drug Evaluation and Research, and other FDA representatives will be participating.

Dated: May 6, 1997.

William K. Hubbard,

Associate Commissioner for Policy Coordination.

[FR Doc. 97–12460 Filed 5–12–97; 8:45 am]

BILLING CODE 4160–01–F

DEPARTMENT OF HEALTH AND HUMAN SERVICES

Health Resources and Services Administration

Advisory Council; Notice of Meeting

In accordance with section 10(a)(2) of the Federal Advisory Committee Act (Pub. L. 92–463), announcement is made of the following National Advisory body scheduled to meet during the month of June 1997.

Name: National Advisory Council on the National Health Service Corps.

Date and Time: June 5–8, 1997 (Times vary, see Agenda).

Place: Holiday Inn Redmont, 2101 5th Avenue North, Birmingham, Alabama 35203.

The meeting is open to the public.

Agenda: Agenda items include updates on the National Health Service Corps program; meetings with current and former NHSC providers; presentations on the NHSC's role in Alabama, academic-community educational linkages, the future role of the NHSC; and meetings of NHSC workgroups on new environment strategies, health system linkages, and mission coalition building.

The opening meeting will be held on Thursday, June 5 from 6:00 p.m. to 9:00 p.m. On Friday and Saturday, meetings will begin at 9:00 a.m. and conclude around 7:00 p.m. Site visits will be made to the West Alabama Health Services, Inc. on Friday. Transportation will be provided to Council members for the site visits. Sunday's meeting will begin at 9:00 a.m. and adjourn around noon.

The meeting is open to the public. Anyone requiring information regarding the subject Council should contact Ms. Eve Morrow, National Advisory Council on the National Health Service Corps, Health Resources and Services Administration, 8th floor, 4350 East West Highway, Rockville, Maryland 20857, Telephone (301) 594–4149.

Agenda Items are subject to change as priorities dictate.

Dated: May 7, 1997.

J. Henry Montes,

Director, Office of Policy and Information Coordination, HRSA.

[FR Doc. 97–12462 Filed 5–12–97; 8:45 am]

BILLING CODE 4160–15–P

DEPARTMENT OF HEALTH AND HUMAN SERVICES

National Institutes of Health

National Institute of Allergy and Infectious Diseases; Notice of Closed Meeting

Pursuant to Section 10(d) of the Federal Advisory Committee Act, as amended (5 U.S.C. Appendix 2), notice is hereby given of the following National Institute of Allergy and Infectious Diseases Special Emphasis Panel (SEP) meeting:

Name of SEP: Sexually Transmitted Diseases Clinical Trials Unit.

Date: May 30, 1997.

Time: 8:30 a.m.

Place: National Institutes of Health, Building 31C, Conference Room 6, 9000 Rockville Pike, Bethesda, MD 20892, (301) 496–6260.

Contact Person: Dr. Sayeed Quraishi, Scientific Review Adm., 6003 Executive Boulevard, Solar Bldg., Room 4C22, Bethesda, MD 20892, (301) 496–7465.

Purpose/Agenda: To evaluate a contract proposal.

The meeting will be closed in accordance with the provisions set forth in secs. 552b(c)(4) and 552b(c)(6), Title 5, U.S.C. Applications and/or proposals and the discussions could reveal confidential trade secrets or commercial property such as patentable material and personal information concerning individuals associated with the applications and/or proposals, the disclosure of which would constitute a clearly unwarranted invasion of personal privacy.

(Catalog of Federal Domestic Assistance Programs Nos. 93.855, Immunology, Allergic and Immunologic Diseases Research; 93.856,

Microbiology and Infectious Diseases Research, National Institutes of Health)

Dated: May 7, 1997.

LaVerne Y. Stringfield,

Committee Management Officer, NIH.

[FR Doc. 97–12493 Filed 5–12–97; 8:45 am]

BILLING CODE 4140–01–M

DEPARTMENT OF HEALTH AND HUMAN SERVICES

National Institutes of Health

National Institute of Allergy and Infectious Diseases; Notice of Closed Meeting

Pursuant to Section 10(d) of the Federal Advisory Committee Act, as amended (5 U.S.C. Appendix 2), notice is hereby given of the following National Institute of Allergy and Infectious Diseases Special Emphasis Panel (SEP) meeting:

Name of SEP: Collaborations for Advanced Strategies in Opportunistic Infections (Telephone Conference Call).

Date: May 27, 1997.

Time: 1:00 p.m.

Place: Teleconference, 6003 Executive Boulevard, Solar Bldg., Room 4C01, Rockville, MD 20852, (301) 496–2550.

Contact Person: Dr. Vassil Georgiev, Scientific Review Adm., 6003 Executive Boulevard, Solar Bldg., Room 4C04, Bethesda, MD 20892, (301) 496–8206.

Purpose/Agenda: To evaluate a grant application.

The meeting will be closed in accordance with the provisions set forth in secs. 552b(c)(4) and 552b(c)(6), Title 5, U.S.C. Applications and/or proposals and the discussions could reveal confidential trade secrets or commercial property such as patentable material and personal information concerning individuals associated with the applications and/or proposals, the disclosure of which would constitute a clearly unwarranted invasion of personal privacy.

(Catalog of Federal Domestic Assistance Programs Nos. 93.855, Immunology, Allergic and Immunologic Diseases Research; 93.856, Microbiology and Infectious Diseases Research, National Institutes of Health.)

Dated: May 7, 1997.

LaVerne Y. Stringfield,

Committee Management Officer, NIH.

[FR Doc. 97–12494 Filed 5–12–97; 8:45 am]

BILLING CODE 4140–01–M

DEPARTMENT OF HEALTH AND HUMAN SERVICES

National Institutes of Health

National Institute of Mental Health; Notice of Closed Meeting

Pursuant to Section 10(d) of the Federal Advisory Committee Act, as amended (5 U.S.C. Appendix 2), notice is hereby given of the following meeting of the National Institute of Mental Health:

Agenda Purpose: To review and evaluate grant applications.

Committee Name: National Institute of Mental Health Special Emphasis Panel.

Date: June 2, 1997.

Time: 12:30 p.m.

Place: River Inn, 924 25th Street, NW., Washington, DC 20037.

Contact Person: Salvador H. Cuellar, Parklawn, Room 9C–18, 5600 Fishers Lane, Rockville, MD 20857, Telephone: 301, 443–4868.

The meeting will be closed in accordance with the provisions set forth in secs. 552b(c)(4) and 552b(c)(6), Title 5, U.S.C. Applications and/or proposals and the discussions could reveal confidential trade secrets or commercial property such as patentable material and personal information concerning individuals associated with the applications and/or proposals, the disclosure of which would constitute a clearly unwarranted invasion of personal privacy.

(Catalog of Federal Domestic Assistance Program Numbers 93,242, 93.281, 93.282).

Dated: May 7, 1997.

LaVerne Y. Stringfield,

Committee Management Officer, NIH.

[FR Doc. 97–12495 Filed 5–12–97; 8:45 am]

BILLING CODE 4140–01–M

DEPARTMENT OF HEALTH AND HUMAN SERVICES

Substance Abuse and Mental Health Services Administration (SAMHSA)

Notice of Meetings

Pursuant to Public Law 92–463, notice is hereby given of the following meetings of the SAMHSA Special Emphasis Panel I (SEP I) in June.

Summaries of the meetings and rosters of the members may be obtained from: Ms. Dee Herman, Committee Management Liaison, SAMHSA Office of Extramural Activities Review, 5600 Fishers Lane, Room 17–89, Rockville, Maryland 20857. Telephone: (301) 443–4783.

Substantive program information may be obtained from the individuals named as Contacts for the meetings listed below.

The meetings will include the review, discussion and evaluation of individual grant applications. These discussions could reveal personal information concerning individuals associated with the applications. Accordingly, these meetings are concerned with matters exempt from mandatory disclosure in Title 5 U.S.C. 552b(c)(6) and 5 U.S.C. App.2, § 10(d).

Committee Name: SAMHSA Special Emphasis Panel I (SEP I).

Meeting Dates: June 8–10, 1997.

Place: Sheraton City Centre Hotel and Towers, 1143 New Hampshire Avenue, NW., Valley Forge Conference Room, Washington, DC 20037.

Closed: June 8, 1997—6:00 p.m.–8:00 p.m. June 9, 1997—9:00 a.m.–5:00 p.m. June 10, 1997—9:00 a.m.–adjournment.

Panel: Center for Substance Abuse Treatment Cooperative Agreements for Managed Care and Adolescents.

Contact: Kate McGuire, Room 17–89, Parklawn Building, Telephone: 301–443–4783 and FAX: 301–443–3437.

Committee Name: SAMHSA Special Emphasis Panel I (SEP I).

Meeting Dates: June 8–10, 1997.

Place: Sheraton City Centre Hotel and Towers, 1143 New Hampshire Avenue, NW., Monticello Room, Washington, DC 20037.

Closed: June 8, 1997—6:00 p.m.–8:00 p.m., June 9, 1997—8:30 a.m.–5:00 p.m., June 10, 1997—8:30 a.m.–adjournment.

Panel: Center for Mental Health Services Community Action Grants for Service Systems Change—Child Committee.

Contact: Walter Sloboda, Room 11C–22, Parklawn Building, Telephone: 301–443–4783 and FAX: 301–443–3437.

Committee Name: SAMHSA Special Emphasis Panel I (SEP I).

Meeting Dates: June 8–13, 1997.

Place: Sheraton City Centre Hotel and Towers, 1143 New Hampshire Avenue, NW., Mt. Vernon Room, Washington, DC 20037.

Closed: June 8, 1997—6:00 p.m.–8:00 p.m., June 9–12, 1997—9:00 a.m.–5:00 p.m., June 13, 1997—9:00 a.m.–adjournment.

Panel: Center for Mental Health Services Child Mental Health Initiative.

Contact: Rosalyn Bass, M.A., M.P.H., Room 17–89, Parklawn Building, Telephone: 301–443–4783 and FAX: 301–443–3437.

Committee Name: SAMHSA Special Emphasis Panel I (SEP I).

Meeting Dates: June 11–13, 1997.

Place: Sheraton City Centre Hotel and Towers, 1143 New Hampshire Avenue, NW., Monticello Room, Washington, DC 20037.

Closed: June 11–12, 1997—8:30 a.m.–5:00 p.m., June 13, 1997—8:30 a.m.–adjournment.

Panel: Center for Mental Health Services Community Action Grants for Service Systems Change—Adult Committee.

Contact: Walter Sloboda, Room 11C–22, Parklawn Building, Telephone: 301–443–4783 and FAX: 301–443–3437.

Dated: May 7, 1997.

Jeri Lipov,

Committee Management Officer, Substance Abuse and Mental Health Services Administration.

[FR Doc. 97–12463 Filed 5–12–97; 8:45 am]

BILLING CODE 4162–20–P

DEPARTMENT OF HOUSING AND URBAN DEVELOPMENT

[Docket No. FR–4163–C–02]

NOFA for Emergency Shelter Grants Set-Aside for Indian Tribes and Alaskan Native Villages; Correction

AGENCY: Office of the Assistant Secretary for Public and Indian Housing, HUD.

ACTION: Notice of funding availability; correction.

SUMMARY: This notice corrects information that was provided in the notice of funding availability (NOFA) for Emergency Shelter Grants (ESG) Set-Aside for Indian Tribes and Alaskan Native Villages for fiscal year 1997, published in the **Federal Register** on April 11, 1997 (62 FR 17970). This notice clarifies that new construction is not an eligible activity under the ESG program.

DATES: This notice does not affect the deadline date provided in the April 11, 1997 NOFA. Applications must still be received by the appropriate HUD Office of Native American Programs (ONAP) by no later than 3 p.m. local time (i.e., the time in the office to which the application is submitted) on May 23, 1997.

ADDRESSES: This notice does not affect the application submission information provided in the April 11, 1997 NOFA. Application packages are available from the HUD Offices of Native American Programs (ONAPs) listed in Appendix 1 to the NOFA.

FOR FURTHER INFORMATION CONTACT: Applicants may contact the appropriate Office of Native American Programs (ONAPs), listed in Appendix 1 to the April 11, 1997 NOFA, for further information.

SUPPLEMENTARY INFORMATION: On April 11, 1997 (62 FR 17970), HUD published in the **Federal Register** the Notice of Funding Availability (NOFA) for the Emergency Shelter Grants (ESG) Set-Aside for Indian Tribes and Alaskan Native Villages for fiscal year (FY) 1997. The April 11, 1997 NOFA provided, in section III.B.(2), that the selection process for the ESG program for Indian tribes includes a preliminary threshold review (62 FR 17971). The NOFA further provided in paragraph (d) of that section that HUD will review each application proposing new construction to determine whether all proposed buildings are in compliance with section 504 of the Rehabilitation Act of 1973 and the Americans with Disabilities Act (ADA).

The provision regarding new construction mistakenly implies that new construction is an eligible activity under the ESG program. In accordance with the provisions of 24 CFR 576.21 of the ESG program regulations, however, emergency shelter grant amounts may not be used for new construction. Therefore, the provision regarding new construction in the April 11, 1997 NOFA should be removed. As provided in § 576.57(a), however, grantees must comply with nondiscrimination and equal opportunity requirements, as applicable, when conducting the eligible activities listed in § 576.21.

Accordingly, FR Doc. 97–9305, the NOFA for Emergency Shelter Grants Set-Aside for Indian Tribes and Alaskan Native Villages, published in the **Federal Register** on April 11, 1997 (62 FR 17970), is amended on page 17971, column 2, by correcting section III.B.(2) (a), (b), and (c) to read as follows:

III. Application Process

* * * * *

B. Eligibility and Threshold Requirements

* * * * *

(2) *Thresholds.* The selection process for the Indian tribe set-aside program includes a preliminary threshold review. The applicant must clearly demonstrate and HUD will review each application to determine whether:

(a) The application is adequate in form, time, and completeness;

(b) The applicant is eligible; and

(c) The proposed activities and persons to be served are eligible for assistance under the program.

* * * * *

Dated: May 6, 1997.

Kevin Emanuel Marchman,

Acting Assistant Secretary for Public and Indian Housing.

[FR Doc. 97–12453 Filed 5–12–97; 8:45 am]

BILLING CODE 4210–33–P

DEPARTMENT OF THE INTERIOR

Fish and Wildlife Service

Notice of Availability of an Application Submitted by Friendfield Plantation for an Incidental Take Permit for Red-cockaded Woodpeckers in Association With the Sale of the White Oak Bay Tract in Georgetown County, South Carolina

AGENCY: Fish and Wildlife Service, Interior.

ACTION: Notice.

SUMMARY: Friendfield Plantation (Applicant) has applied to the U.S. Fish and Wildlife Service (Service) for an incidental take permit (ITP) pursuant to Section 10(a)(1)(B) of the Endangered Species Act of 1973 (Act), as amended. The proposed ITP would authorize the incidental take of a federally endangered species, the red-cockaded woodpecker *Picoides borealis* (RCW) known to occur on property owned by the Applicant in Georgetown County, South Carolina. The Applicant is requesting an ITP associated with the sale of the White Oak Bay tract. The White Oak Bay Tract consists of 792 acres and the extant RCW population currently consists of one group. The proposed ITP would authorize incidental take of one group of RCWs at the White Oak Bay Tract; the expectation of the Applicant is to sell or otherwise develop the parcel for economic reasons incompatible to RCW conservation on-site. The proposed ITP would authorize incidental take in exchange for mitigation elsewhere as described further in the **SUPPLEMENTARY INFORMATION** Section below. The mitigation and minimization strategy in the HCP involves creating two new recruitment clusters on Friendfield Plantation tract, and relocating the one RCW group from the White Oak Bay Tract to Friendfield Plantation. The Friendfield Plantation tract is also owned by the Applicant. (See the **SUPPLEMENTARY INFORMATION** Section below.) By consolidating the two populations in two separate tracts onto one tract, the Applicant will increase the stability of the extant population.

The Service also announces the availability of the Applicant's habitat conservation plan (HCP) for the incidental take application. Copies of the HCP may be obtained by making a request to the Regional Office (see **ADDRESSES**). Requests must be in writing to be processed. The Service specifically requests comment on the appropriateness of the ''No Surprises'' assurances should the Service determine that an ITP will be granted and based upon the submitted HCP. Although not explicitly stated in the HCP, the Service has, since August 1994, announced its intention to honor a ''No Surprises'' Policy for applicants seeking ITPs. Copies of the Service's ''No Surprises'' Policy may be obtained by making a written request to the Regional Office (see **ADDRESSES**). The Service has considered this a Categorical Exclusion on the action under the National Environmental Policy Act (see **SUPPLEMENTARY INFORMATION**). The Service is soliciting public comments and review the

applicability of the ''No Surprises'' Policy to this application and HCP.

DATES: Written comments on the permit application and HCP should be sent to the Service's Regional Office (see **ADDRESSES**) and should be received on or before June 12, 1997.

ADDRESSES: Persons wishing to review the application and HCP may obtain a copy by writing the Service's Southeast Regional Office, Atlanta, Georgia. Documents will also be available for public inspection by appointment during normal business hours at the Regional Office, 1875 Century Boulevard, Suite 200, Atlanta, Georgia 30345 (Attn: Endangered Species Permits), or at the following Field Offices: Field Supervisor, U.S. Fish and Wildlife Service, P.O. Box 12559, Charleston, South Carolina 29422–2559 (telephone 803/727–4707); Red-cockaded Woodpecker Recovery Coordinator, U.S. Fish and Wildlife Service, College of Forest and Recreational Resources, 261 Lehotsky Hall, Box 341003, Clemson, South Carolina 29634–1003 (telephone 864/656–2432). Written data or comments concerning the application or HCP should be submitted to the Regional Office. Comments must be submitted in writing to be processed. Please reference permit under PRT–827374 in such comments, or in requests of the documents discussed herein.

FOR FURTHER INFORMATION CONTACT: Mr. Rick G. Gooch, Regional Permit Coordinator, (see **ADDRESSES** above), telephone: 404/679–7110; or Ms. Lori Duncan, Fish and Wildlife Biologist, Charleston Field Office, (see **ADDRESSES** above), telephone: 803/727–4707 extension 21.

SUPPLEMENTARY INFORMATION: The RCW is a territorial, non-migratory cooperative breeding bird species. RCWs live in social units called groups which generally consist of a breeding pair, the current year's offspring, and one or more helpers (normally adult male offspring of the breeding pair from previous years). Groups maintain year-round territories near their roost and nest trees. The RCW is unique among the North American woodpeckers in that it is the only woodpecker that excavates its roost and nest cavities in living pine trees. Each group member has its own cavity, although there may be multiple cavities in a single pine tree. The aggregate of cavity trees is called a cluster. RCWs forage almost exclusively on pine trees and they generally prefer pines greater than 10 inches diameter at breast height. Foraging habitat is contiguous with the cluster. The number of acres required to supply adequate foraging habitat depends on the quantity and quality of the pine stems available.

The RCW is endemic to the pine forests of the Southeastern United States and was once widely distributed across 16 States. The species evolved in a mature fire-maintained ecosystem. The RCW has declined primarily due to the conversion of mature pine forests to young pine plantations, agricultural fields, and residential and commercial developments, and to hardwood encroachment in existing pine forests due to fire suppression. The species is still widely distributed (presently occurs in 13 Southeastern States), but remaining populations are highly fragmented and isolated. Presently, the largest known populations occur on federally owned lands such as military installations and national forests.

In South Carolina, there are an estimated 1,000 active RCW clusters as of 1992; 53 percent are on Federal lands, 7 percent are on State lands, and 40 percent are on private lands.

There has not been a complete inventory of RCWs in South Carolina, so it is difficult to precisely assess the species' overall status in the State. However, the known populations on public lands are regularly monitored and generally considered stable. While several new active RCW clusters have been discovered on private lands over the past few years, many previously documented RCW clusters have been lost. It is expected that the RCW population on private lands in South Carolina will continue to decline, especially those from small tracts isolated from other RCW populations.

There is only one known RCW cluster at White Oak Bay. The cluster consists of two active cavity trees. Two RCWs are known to occupy the cluster. The nearest known concentration of RCW groups occurs on the Francis Marion National Forest, approximately 20 miles away from the White Oak Bay tract. The Applicant proposes to sell the White Oak Bay property, unencumbered by RCWs as soon as possible. The White Oak Bay tract has serious midstory problems and is relatively isolated from other RCW populations. Without management, the midstory would continue to encroach and the RCW would most likely abandon the tract.

The HCP provides for an off-site mitigation strategy focusing on creating two clusters in designated recruitment sites at Friendfield Plantation through cavity provisioning. The Friendfield Plantation clusters (including the recruitment sites) and the Williamsburg County clusters (also owned by the Applicant) will be managed and protected for the RCW. The Applicant, via their consultant, will attempt to translocate the RCWs from White Oak Bay to the main Plantation. The HCP provides a funding source for the above-mentioned mitigation and minimization measures.

On Thursday, January 16, 1997, the Service published a notice in the **Federal Register** announcing the Final Revised Procedures for implementation of NEPA (NEPA Revisions), (62 FR 2375–2382). The NEPA revisions update the Service's procedures, originally published in 1984, based on changing trends, laws, and consideration of public comments. Most importantly, the NEPA revisions reflect new initiatives and Congressional mandates for the Service, particularly involving new authorities for land acquisition activities, expansion of grant programs and other private land activities, and increased Endangered Species Act permit and recovery activities. The revisions promote cooperating agency arrangements with other Federal agencies; early coordination techniques for streamlining the NEPA process with other Federal agencies, Tribes, the States, and the private sector; and integrating the NEPA process with other environmental laws and executive orders. Section 1.4 of the NEPA Revisions identify actions that may qualify for Categorical Exclusion. Categorical exclusions are classes of actions which do not individually or cumulatively have a significant effect on the human environment. Categorical exclusions are not the equivalent of statutory exemptions. If exceptions to categorical exclusions apply, under 516 DM 2, Appendix 2 of the Departmental Manual, the departmental categorical exclusions cannot be used. Among the types of actions available for a Categorical Exclusion is for a ''low effect'' HCP/ITP. A ''low effect'' HCP is defined as an application that, individually or cumulatively, has a minor or negligible effect on the species covered in the HCP [Section 1.4(C)(2)].

The Service considers the Applicant's project and HCP a Categorical Exclusion, since the impacts of issuing the ITP involve only a single RCW group. The Service is soliciting for public comments on this determination.

Dated: May 6, 1997.

Sam D. Hamilton,

Acting Regional Director.

[FR Doc. 97–12456 Filed 5–12–97; 8:45 am]

BILLING CODE 4310–55–P

DEPARTMENT OF THE INTERIOR

Bureau of Land Management

(CA–930–1430–01; CACA 35558)

Public Land Order No. 7260; Withdrawal of Public Lands for Red Rock Canyon State Park; CA

AGENCY: Bureau of Land Management, Interior.

ACTION: Public Land Order.

SUMMARY: This order withdraws 8,896 acres of public lands from all public land and mineral laws except conveyances under Section 701 of the California Desert Protection Act of 1994, for a period of 20 years to protect the park resources of the lands until they can be conveyed to the State of California as mandated by Congress. Congress has mandated all the public lands described below be conveyed to the State of California, subject to valid existing rights, for inclusion in Red Rock Canyon State Park (California Desert Protection Act, 108 Stat. 4471, Sec. 701).

EFFECTIVE DATE: May 13, 1997.

FOR FURTHER INFORMATION CONTACT: Nancy Alex, BLM California State Office (CA–931.1), 2135 Butano Drive, Sacramento, California 95825; 916–979–2858.

By virtue of the authority vested in the Secretary of the Interior by Section 204 of the Federal Land Policy and Management Act of 1976, 43 U.S.C. 1714 (1988), it is ordered as follows:

1. Subject to valid existing rights, the following described public lands are hereby withdrawn from settlement, sale, location, or entry under the general land laws, including the United States mining laws (30 U.S.C. Ch. 2, (1988)) and the mineral leasing laws, but not from conveyance under Section 701 of the California Desert Protection Act of 1994 (108 Stat. 4471):

Mount Diablo Meridian

T. 29 S., R. 37 E.
Sec. 1, lot 1, S½N½, and S½;
Sec. 2, SE¼NE¼ and E½SE¼;
Sec. 11, E½NE¼ and N½NE¼SE¼;
Sec. 12, N½ and N½S½;
Sec. 25, E½ and SW¼.

T. 29 S., R. 38 E. 24 Sec. 4, lots 1 to 4, inclusive, S½N½, and S½;
Sec. 5, lots 1 to 4, inclusive, S½N½, NE¼NE¼SW¼, W½NE¼SW¼, NW¼SW¼, N½SW¼SW¼, E½SE¼, E½W½SE¼, and NW¼NW¼SE¼;
Sec. 6, lots 1 to 7, inclusive, S½NE¼, SE¼NW¼, E½SW¼, N½SE¼, SW¼SE¼, N½SE¼SE¼, and SW¼SE¼SE¼;
Sec. 7, lots 1 to 4, inclusive, NW¼NE¼NE¼, NW¼NE¼, W½SW¼NE¼, E½W½, NE¼NE¼SE¼, S½NE¼SE¼, W½NW¼SE¼, SE¼NW¼SE¼, and S½SE¼;
Sec. 8, NE¼, E½NE¼NW¼, S½NW¼, and S½; 24 Sec. 9;
Sec. 17, N½, E½SW¼, E½W½SW¼, NW¼NW¼SW¼, and SE¼;
Sec. 18, lots 1 and 2, NE¼, E½NW¼, N½NE¼SW¼, and N½N½SE¼;
Sec. 19, E½SW¼ and SE¼;
Sec. 20, E½, E½NW¼, E½NW¼NW¼, NE¼SW¼NW¼, and SW¼;
Sec. 21, N½, SW¼, and N½SE¼;
Sec. 28, SW¼NE¼NW¼, W½SE¼NW¼, W½W½, SE¼NE¼SW¼, W½E½SW¼, and E½SE¼SW¼;
Sec. 29, E½NE¼, NW¼NE¼, N½SW¼NE¼, SE¼SW¼NE¼, NW¼, E½E½SE¼, and NW¼NE¼SE¼;
Sec. 30, lots 1, 4, and 6, N½NE¼, E½W½SW¼NE¼, E½SW¼NE¼, W½SE¼NE, NE¼NW¼, S½NE¼SW¼, N½SE¼SW¼, W½NE¼SE¼, and NW¼SE¼;
Sec. 31, lots 1 and 2, and E½NW¼;
Sec. 33, that portion lying north of the northern right-of-way boundary of the highway known as the Redrock Randsburg Road.

T. 30 S., R. 38 E. 24 Sec. 4, that portion of lot 2 of NE¼ lying north of the northern right-of-way boundary of the highway known as the Redrock Randsburg Road;
Sec. 6, lots 1 and 2 of NW¼.

The areas described aggregate 8,896 acres in Kern County.

2. The withdrawal made by this order does not alter the applicability of those public land laws governing the use of the lands under lease, license, or permit, or governing the disposal of their vegetative resources.

3. This withdrawal will expire automatically upon issuance of patent or 20 years from the effective date of this order unless, as a result of a review conducted before the expiration date pursuant to Section 204(f) of the Federal Land Policy and Management Act of 1976, 43 U.S.C. 1714(f) 1988, the Secretary determines that the withdrawal shall be extended.

Dated: May 6, 1997.

Bob Armstrong,

Assistant Secretary of the Interior.

[FR Doc. 97–12469 Filed 5–12–97; 8:45 am]

BILLING CODE 4310–40–P

DEPARTMENT OF THE INTERIOR

National Park Service

Cape Cod National Seashore; Concession Contract

AGENCY: National Park Service, Interior.

ACTION: Public Notice.

SUMMARY: Public notice is hereby given that the National Park Service proposes to award a concession contract authorizing the operation of golf course facilities and services for the public at Cape Cod National Seashore for a period of five (5) years from January 1, 1998.

EFFECTIVE DATE: July 14, 1997.

ADDRESSES: Interested parties should contact National Park Service, Concession Management Program, New England System Support Office, 15 State Street, Boston, MA 02109–3572, Telephone (617) 223–5209, to obtain a copy of the prospectus describing the requirements of the proposed contract.

SUPPLEMENTARY INFORMATION: This contract has been determined to be categorically excluded from the procedural provisions of the National Environmental Policy Act and no environmental document will be prepared.

The existing concessioner has performed its obligations to the satisfaction of the Secretary under an existing contract which expired by limitation of time on December 31, 1996, and therefore pursuant to the provisions of Section 5 of the Act of October 9, 1965 (79 Stat. 969; 16 U.S.C. § 20), is entitled to be given preference in the renewal of the contract and in the negotiation of a new contract, providing that the existing concessioner submits a responsive offer (a timely offer which meets the terms and conditions of the Prospectus). This means that the contract will be awarded to the party submitting the best offer, provided that if the best offer was not submitted by the existing concessioner, then the existing concessioner will be afforded the opportunity to match the best offer. If the existing concessioner agrees to match the best offer, then the contract will be awarded to the existing concessioner.

If the existing concessioner does not submit a responsive offer, the right of preference in renewal shall be considered to have been waived, and the contract will then be awarded to the party that has submitted the best responsive offer.

The Secretary will consider and evaluate all proposals received as a result of this notice. Any proposal, including that of the existing concessioner, must be received by the Concession Management Program, not later than the sixtieth (60th) day following publication of this notice to be considered and evaluated.

Dated: April 28, 1997.

Chrysandra Walter,

Field Director, Northeast Field Area.

[FR Doc. 97–12414 Filed 5–12–97; 8:45 am]

BILLING CODE 4310–70–M

DEPARTMENT OF THE INTERIOR

National Park Service

Intention To Extend an Existing Concession Contract

SUMMARY: Notice is hereby given that the National Park Service intends to extend the concession contract with TW Recreational Services, Inc. at Everglades National Park for a period of approximately 3 years through May 31, 2000.

SUPPLEMENTARY INFORMATION: The concession contract with TW Recreational Services, Inc. authorizing it to provide lodging, food and beverage, marina, merchandise and transportation facilities and services within Everglades National Park will expire by limitation of time on May 31, 1997. The National Park Service does not intend to renew this contract for an extended period until sufficient planning can be conducted to determine the future direction for concession services at this site. The necessary planning may affect the future of this operation. This planning and the contract renewal process may take as long as 3 years to complete. Until planning is completed, it is not in the best interest of the National Park Service to enter into a long term concession contract for this operation. This extension may be for a lesser period should planning issues be resolved and a renewal process conducted which results in the award of a new long term concession contract. The existing concessioner has performed its obligations to the satisfaction of the Secretary and, pursuant to the provisions of Section 5 of the Act of October 9, 1965 (79 Stat. 969; 16 U.S.C. 20) is entitled to a preference in the extension of this contract. This means that the extension will be awarded to the party submitting the best offer, provided that if the best offer was not submitted by the existing concessioner, then the existing concessioner will be afforded the opportunity to match the best offer. If the existing concessioner does not agree to the terms of the extension, the right of preference shall be considered to have been waived, and the extension will then be awarded to the party submitting the best responsive offer.

Because of the limited term of the proposed extension, the National Park Service is not encouraging the submission of offers by anyone but the incumbent in response to this proposal, but plans to do so at the time the contract is renewed for a longer term. However, as required by law, the National Park Service will consider and evaluate all offers received in response to this notice. Anyone interested in obtaining further information about this proposed extension should contact: Henry C. Benedetti, Chief, Concessions Management, Everglades National Park, 40001 State Road 9336, Homestead, Florida 33034; Phone: 305–242–7760, Fax: 305–242–7778 no later than 15 days following publication of this notice to obtain a prospectus outlining the requirements of the proposed extension.

Dated: April 15, 1997.

Daniel Brown,

Acting Regional Director.

[FR Doc. 97–12413 Filed 5–12–97; 8:45 am]

BILLING CODE 4310–70–P

DEPARTMENT OF THE INTERIOR

National Park Service

Gateway National Recreation Area; Concession Contract

AGENCY: National Park Service, Interior.

ACTION: Public Notice.

SUMMARY: Public notice is hereby given that the National Park Service proposes to award a concession contract authorizing food service facilities and services for the public at Gateway National Recreation Area for a period of ten (10) years from date of contract execution.

EFFECTIVE DATE: July 14, 1997.

ADDRESSES: Interested parties should contact National Park Service, Concession Management Program, New England System Support Office, 15 State Street, Boston, MA 02109–3572, Telephone (617) 223–5209, to obtain a copy of the prospectus describing the requirements of the proposed contract.

SUPPLEMENTARY INFORMATION: This contract has been determined to be categorically excluded from the procedural provisions of the National Environmental Policy Act and no environmental document will be prepared.

The existing concessioner has performed its obligations to the satisfaction of the Secretary under an existing contract which expired by limitation of time on April 30, 1994, and therefore pursuant to the provisions of Section 5 of the Act of October 9, 1965 (79 Stat. 969; 16 U.S.C. § 20), is entitled to be given preference in the renewal of the contract and in the negotiation of a new contract, providing that the existing concessioner submits a responsive offer (a timely offer which meets the terms and conditions of the Prospectus). This means that the contract will be awarded to the party submitting the best offer, provided that if the best offer was not submitted by the existing concessioner, then the existing concessioner will be afforded the opportunity to match the best offer. If the existing concessioner agrees to match the best offer, then the contract will be awarded to the existing concessioner.

If the existing concessioner does not submit a responsive offer, the right of preference in renewal shall be considered to have been waived, and the contract will then be awarded to the party that has submitted the best responsive offer.

The Secretary will consider and evaluate all proposals received as a result of this notice. Any proposal, including that of the existing concessioner, must be received by the Concession Management Program, not later than the sixtieth (60th) day following publication of this notice to be considered and evaluated.

Dated: April 28, 1997.

Chrysandra Walter,

Field Director, Northeast Field Area.

[FR Doc. 97–12415 Filed 5–12–97; 8:45 am]

BILLING CODE 4310–70–M

DEPARTMENT OF THE INTERIOR

National Park Service

General Management Plan/ Development Concept Plan, Final Environmental Impact Statement, Natural Bridges National Monument, UT

AGENCY: National Park Service, Department of the Interior.

ACTION: Availability of final environmental impact statement and general management plan/development concept plan for Natural Bridges National Monument.

SUMMARY: Pursuant to section 102(2)(c) of the National Environmental Policy Act of 1969, the National Park Service (NPS) announces the availability of a Final Environmental Impact Statement/ General Management Plan/Development Concept Plan (FEIS/GMP) for Natural Bridges National Monument, Utah.

DATES: A 30-day no-action period will follow the Environmental Protection Agency's notice of availability of the FEIS/GMP/DCP.

ADDRESSES: Public reading copies of the FEIS/GMP will be available for review at the following locations:

Office of the Superintendent, Natural Bridges National Monument, Box 1, Natural Bridges, Lake Powell, Utah 84533–0101, (801) 259–5174

Office of Public Affairs, National Park Service, Department of Interior, 18th and C Streets NW, Washington, DC 20240, Telephone: (202) 208–6843

SUPPLEMENTARY INFORMATION: The FEIS/GMP analyzes two alternatives which are being considered to direct the management and development of Natural Bridges National Monument.

The alternatives include: (1) No Action—Under this alternative, existing facilities and management actions would remain unchanged; (2) Proposed Plan—Under the proposal, the administrative/visitor center would be expanded to provide 900–1,400 square feet of office and sales space; removal and rehabilitation of a small picnic area, the addition of a comfort station and benches for visitor comfort along the loop road; the addition of housing for 12 future employees; redesign of the visitor center parking area to improve vehicular circulation; and the addition of a garage and storage building in the maintenance area.

The FEIS/GMP in particular evaluates the environmental consequences of the proposed action and proposal on water resources, flood plains, wetlands, geology, soils, vegetation, wildlife, threatened and endangered species, air quality, visual resources, cultural resources, ethnographic resources, visitor use, interpretation, socioeconomic data, health and safety, law enforcement, other agencies, management and operations, and cumulative impacts. The environmental consequences of the proposal and no-action alternative considered are fully disclosed in the FEIS/GMP/DCP.

FOR FURTHER INFORMATION CONTACT: Superintendent, Natural Bridges National Monument, at the above address and telephone number.

Ron Everhart,

Regional Director, Intermountain Region, National Park Service.

[FR Doc. 97–12504 Filed 5–12–97; 8:45 am]

BILLING CODE 4310–70–P

DEPARTMENT OF THE INTERIOR

National Park Service

National Register of Historic Places; Notification of Pending Nominations

Nominations for the following properties being considered for listing in the National Register were received by the National Park Service before May 3, 1997. Pursuant to section 60.13 of 36 CFR part 60 written comments concerning the significance of these properties under the National Register criteria for evaluation may be forwarded to the National Register, National Park Service, P.O. Box 37127, Washington, D.C. 20013–7127. Written comments should be submitted by May 28, 1997.

Carol D. Shull,

Keeper of the National Register.

Louisiana

Acadia Parish, Le Vieux Presbytere (Louisiana's French Creole Architecture MPS) 205 Rue Iry Lejeune, Church Point, 97000508

Massachusetts

Essex County, Rockport High School, 4 Broadway, Rockport, 97000498

Middlesex County, Pearl Street School, 75 Pearl St., Reading, 97000496

Norfolk County, Borderland Historic District, Address Restricted, North Easton vicinity, 97000497

Minnesota

Ramsey County, Hamm Building, 408 Saint Peter St., St. Paul, 97000499

Montana

Custer County, Ismay Jail, Jailhouse Rd., W of jct. with East St., Ismay, 97000501

Daniels County, Daniels, Mansfield A., House, Approximately 2 mi. W of MT 13 and 2 mi. SW of Scobey, Scobey vicinity, 97000503

Lewis and Clark County, Crum, William C., House, 535 5th Ave., Helena, 97000502

Missoula County, Lincoln School, 1209 Lolo St., Missoula, 97000500

Ravalli County, Etna School, 2853 Eastside Hwy., Stevensville, 97000504

New Hampshire

Carroll County, Tuftonboro United Methodist Church, N side of NH 171, E of jct. with Durgan Rd., Tuftonboro, 97000505

Cheshire County, Jewett—Kemp—Marlens House, North Rd. 2 mi. N of jct. NH 123, Alstead, 97000506

New York

Orange County, Dutchess Quarry Cave Archeological Site (Boundary Increase), Address Restricted, Goshen vicinity, 97000512

North Dakota

Pembina County, Crystal Bridge, (Historic Roadway Bridges of North Dakota MPS) Appleton Ave., over Cart Cr., Crystal vicinity, 97000507

Ohio

Franklin County, Bank Block Building, 1255—1293 Grandview Ave., Grandview, 97000510

Putnam County, Columbus Grove Municipal Pool, 47510 Rd. P, Columbus Grove vicinity, 97000511

Williams County, Hill, James Delos, House, 201 E. Main St., Montpelier, 97000509

Pennsylvania

Allegheny County, Kaufmann's Department Store Warehouse, 1401 Forbes Ave., Pittsburgh, 97000513

Reymer Brothers Candy Factory, 1425 Forbes Ave., Pittsburgh, 97000514

Scott, James, House, 5635 Stanton Ave., Pittsburgh, 97000515

Berks County, Reading Hardware Company, Roughly bounded by Willow, S. 6th, and Canal Sts., and alleyway, Reading, 97000516

Lackawanna County, Williams, Roger, Public School No. 10, 901 Prospect Ave., Scranton, 97000520

Lancaster County, Mumma, Samuel N., Tobacco Warehouse, Elizabeth St., jct. with Barbara Ave., East Hempfield Twnshp., Landisville, 97000517

Luzerne County, West End Wheelmen's Club, 439 S. Franklin St., Wilkes-Barre, 97000521

Washington County, Fleming, Molly, House, 616 Wood St., California, 97000519

York County, Glen Rock Historic District, Roughly bounded by Glenvue Rd., Hanover, Manchester, Valley, Church and Center Sts.,

Shrewsbury Township, Glen Rock, 97000518

South Carolina

Beaufort County, SS William Lawrence Shipwreck Site, Address Restricted, Hilton Head Island vicinity, 97000522

Sumter County, Goodwill Parochial School, 295 N. Brick Church Rd., Mayesville vicinity, 97000523.

[FR Doc. 97–12503 Filed 5–12–97; 8:45 am]

BILLING CODE 4310–70–P

DEPARTMENT OF JUSTICE

Foreign Claims Settlement Commission

[F.C.S.C. Meeting Notice No. 8–97]

Sunshine Act Meeting

The Foreign Claims Settlement Commission, pursuant to its regulations (45 CFR part 504) and the Government in the Sunshine Act (5 U.S.C. 552b), hereby gives notice in regard to the scheduling of meetings and oral hearings for the transaction of Commission business and other matters specified, as follows:

Date and Time: Tuesday, May 20, 1997, 4:00 p.m.

Subject Matter: Consideration of Proposed Decisions on Claims of Holocaust survivors against Germany.

Status: Closed.

All meetings are held at the Foreign Claims Settlement Commission, 600 E Street, N.W., Washington, DC. Requests for information, or advance notices of intention to observe an open meeting, may be directed to: Administrative Officer, Foreign Claims Settlement Commission, 600 E Street, NW., Room 6029, Washington, DC 20579. Telephone: (202) 616–6988.

Dated at Washington, DC, May 9, 1997.

David E. Bradley,

Chief Counsel.

[FR Doc. 97–12656 Filed 5–9–97; 2:02 pm]

BILLING CODE 4410–01–P

DEPARTMENT OF JUSTICE

Foreign Claims Settlement Commission

[F.C.S.C. Meeting Notice No. 9–97]

Sunshine Act Meeting

The Foreign Claims Settlement Commission, pursuant to its regulations (45 CFR part 504) and the Government in the Sunshine Act (5 U.S.C. 552b), hereby gives notice in regard to the scheduling of meetings and oral hearings for the transaction of Commission business and other matters specified, as follows:

Date and Time: Thursday, May 22, 1997, 9:00 a.m.

Subject Matter: Consideration of Proposed Decisions on claims of Holocaust survivors against Germany.

Status: Closed.

All meetings are held at the Foreign Claims Settlement Commission, 600 E Street, N.W., Washington, DC. Requests for information, or advance notices of intention to observe an open meeting, may be directed to: Administrative Officer, Foreign Claims Settlement Commission, 600 E Street, NW., Room 6029, Washington, DC 20579. Telephone: (202) 616–6988.

Dated at Washington, DC, May 9, 1997.

Judith H. Lock,

Administrative Officer.

[FR Doc. 97–12657 Filed 5–9–97; 2:02 pm]

BILLING CODE 4410–01–P

DEPARTMENT OF JUSTICE

Foreign Claims Settlement Commission

[F.C.S.C. Meeting Notice No. 10–97]

Sunshine Act Meeting

The Foreign Claims Settlement Commission, pursuant to its regulations (45 CFR Part 504) and the Government in the Sunshine Act (5 U.S.C. 552b), hereby gives notice in regard to the scheduling of meetings and oral hearings for the transaction of Commission business and other matters specified, as follows:

Date and Time: Wednesday, May 28, 1997, 2:00 p.m.

Subject Matter: Consideration of Proposed Decisions on claims of Holocaust survivors against Germany.

Status: Closed.

All meetings are held at the Foreign claims Settlement Commission, 600 E Street, N.W., Washington, DC. Requests for information, or advance notices of intention to observe an open meeting, may be directed to: Administrative Officer, Foreign Claims Settlement Commission, 600 E Street, NW., Room 6029, Washington, DC 20579. Telephone: (202) 616–6988.

Dated at Washington, DC, May 9, 1997.

Judith H. Lock,

Administrative Officer.

[FR Doc. 97–12658 Filed 5–9–97; 2:02 pm]

BILLING CODE 4410–01–P

DEPARTMENT OF JUSTICE

Foreign Claims Settlement Commission

[F.C.S.C. Meeting Notice No. 11–97]

Sunshine Act Meeting

The Foreign Claims Settlement Commission, pursuant to its regulations (45 CFR Part 504) and the Government in the Sunshine Act (5 U.S.C. 552b), hereby gives notice in regard to the scheduling of meetings and oral hearings for the transaction of Commission business and other matters specified, as follows:

Date and Time: Friday, May 30, 1997, 2:00 p.m.

Subject Matter: Consideration of Proposed Decisions on claims of Holocaust survivors against Germany.

Status: Closed.

All meetings are held at the Foreign Claims Settlement Commission, 600 E Street, N.W., Washington, DC. Requests for information, or advance notices of intention to observe an open meeting, may be directed to: Administrative Officer, Foreign Claims Settlement Commission, 600 E Street, NW., Room 6029, Washington, DC 20579. Telephone: (202) 616–6988.

Dated at Washington, DC, May 9, 1997.

Judith H. Lock,

Administrative Officer.

[FR Doc. 97–12659 Filed 5–9–97; 2:02 pm]

BILLING CODE 4410–01–P

DEPARTMENT OF JUSTICE

Foreign Claims Settlement Commission

[F.C.S.C. Meeting Notice No. 12–97]

Sunshine Act Meeting

The Foreign Claims Settlement Commission, pursuant to its regulations (45 CFR Part 504) and the Government in the Sunshine Act (5 U.S.C. 552b), hereby gives notice in regard to the scheduling of meetings and oral hearings for the transaction of Commission business and other matters specified, as follows:

Date and Time: Tuesday, June 3, 1997, 10:00 a.m.

Subject Matter: Consideration of Proposed Decisions on claims of Holocaust survivors against Germany.

Status: Closed.

All meetings are held at the Foreign Claims Settlement Commission, 600 E Street, N.W., Washington, DC. Requests for information, or advance notices of intention to observe an open meeting, may be directed to: Administrative Officer, Foreign Claims Settlement Commission, 600 E Street, NW., Room 6029, Washington, DC 20579. Telephone: (202) 616–6988.

Dated at Washington, DC, May 9, 1997.

Judith H. Lock,

Administrative Officer.

[FR Doc. 97–12660 Filed 5–9–97; 2:02 pm]

BILLING CODE 4410–01–P

DEPARTMENT OF JUSTICE

Foreign Claims Settlement Commission

[F.C.S.C. Meeting Notice No. 13–97]

Sunshine Act Meeting

The Foreign Claims Settlement Commission, pursuant to its regulations (45 CFR part 504) and the Government in the Sunshine Act (5 U.S.C. 552b), hereby gives notice in regard to the scheduling of meetings and oral

hearings for the transaction of Commission business and other matters specified, as follows:

Date and Time: Friday, June 6, 1997, 9:30 a.m.

Subject Matter: Consideration of Proposed Decisions on claims of Holocaust survivors against Germany.

Status: Closed.

All meetings are held at the Foreign Claims Settlement Commission, 600 E Street, N.W., Washington, DC. Requests for information, or advance notices of intention to observe an open meeting, may be directed to: Administrative Officer, Foreign Claims Settlement Commission, 600 E Street, NW., Room 6029, Washington, DC 20579. Telephone: (202) 616–6988.

Dated at Washington, DC, May 9, 1997.

Judith H. Lock,

Administrative Officer.

[FR Doc. 97–12661 Filed 5–9–97; 2:02 pm]

BILLING CODE 4410–01–P

DEPARTMENT OF JUSTICE

Office of Justice Programs

Bureau of Justice Assistance; Agency Information Collection Activities: Proposed Collection; Comment Request

ACTION: Request for OMB Emergency Approval; State Identification Systems Grant Program Application Kit.

The Department of Justice, Office of Justice Programs, Bureau of Justice Assistance, has submitted the following information collection requests to the Office of Management and Budget (OMB) for review and clearance in accordance with the Paperwork Reduction Act of 1995. OMB approval has been requested by May 13, 1997. If granted, the emergency approval is only valid for 180 days. Comments should be directed to OMB, Office of Information and Regulatory Affairs, Attention: Ms. Victoria Wassmer, 202–395–5871, Department of Justice Desk Officer, Washington, DC, 20530.

During the first 60 days of this same time period a regular review of this information collection is also being undertaken. Comments are encouraged and will be accepted until; July 14, 1997. The agency requests written comments and suggestions from the public and affected agencies concerning the proposed collection of information. Your comments should address one or more of the following four points:

(1) Evaluate whether the proposed collection of information is necessary for the proper performance of the functions of the agency, including whether the information will have practical utility;

(2) Evaluate the accuracy of the agencies estimate of the burden of the proposed collection of information, including the validity of the methodology and assumptions used;

(3) Enhance the quality, utility, and clarity of the information to be collected; and

(4) Minimize the burden of the collection of information on those who are to respond, including through the use of appropriate automated, electronic, mechanical, or other technological collection techniques or other forms of information technology, e.g., permitting electronic submission of responses.

If you have additional comments, suggestions, or need a copy of the proposed information collection instrument with instructions, or additional information, please contact Margaret H. Shelko, 202–514–6638, Bureau of Justice Assistance, Office of Justice programs, U.S. Department of Justice, 633 Indiana Avenue, NW., Washington, DC 20531.

Overview of this information:

(1) Type of Information Collection: New collection.

(2) Title of the Form/Collection: State Identification Systems Grant Program Application Kit

(3) Agency form number, if any, and the applicable component of the Department of Justice sponsoring the collection: Bureau of Justice Assistance, Office of Justice Programs, United States Department of Justice.

(4) Affected public who will be asked or required to respond, as well as a brief abstract:

Primary: State Government.

Other: None.

The State Identification Systems Grant Program was created by the Antiterrorism and Effective Death Penalty Act of 1996 to provide funds to enhance identification systems of criminal justice agencies at the state and local level.

(5) An estimate of the total number of respondents and the amount of time estimated for an average respondent to respond/reply:

The time burden of the 52 respondents to complete the surveys is 30 minutes per application.

(6) An estimate of the total public burden (in hours) associated with the collection:

The total annual hour burden to complete applications for the State Identification Systems Grant Program is 26 annual burden hours.

If additional information is required, contact: Mr. Robert B. Briggs, Clearance Officer, United States Department of Justice, Information Management and Security Staff, Justice Management Division, Suite 850, Washington Center, 1001 G Street NW., Washington, DC 20530.

Dated: May 7, 1997.

Robert B. Briggs,

Department Clearance Officer, United States Department of Justice.

[FR Doc. 97–12432 Filed 5–12–97; 8:45 am]

BILLING CODE 4410–18–M

DEPARTMENT OF LABOR

Office of the Secretary

Submission for OMB Review; Comment Request

May 8, 1997.

The Department of Labor (DOL) has submitted the following public information collection requests (ICRs) to the Office of Management and Budget (OMB) for review and approval in accordance with the Paperwork Reduction Act of 1995 (P.L. 104–13, 44 U.S.C. Chapter 35). A copy of each individual ICR, with applicable supporting documentation, may be obtained by calling the Department of Labor, Departmental Clearance Officer, Theresa M. O'Malley ((202) 219–5096 ext. 143). Individuals who use a telecommunications device for the deaf (TTY/TDD) may call (202) 219–4720 between 1:00 p.m. and 4:00 p.m. Eastern time, Monday through Friday.

Comments should be sent to Office of Information and Regulatory Affairs, Attn: OMB Desk Officer for BLS, DM, ESA, ETA, MSHA, OSHA, PWBA, or VETS, Office of Management and Budget, Room 10235, Washington, DC 20503 ((202) 395–7316), within 30 days from the date of this publication in the **Federal Register**.

The OMB is particularly interested in comments which:

- evaluate whether the proposed collection of information is necessary for the proper performance of the functions of the agency, including whether the information will have practical utility;
- evaluate the accuracy of the agency's estimate of the burden of the proposed collection of information, including the validity of the methodology and assumptions used;
- enhance the quality, utility, and clarity of the information to be collected; and
- minimize the burden of the collection of information on those who are to respond, including through the

use of appropriate automated, electronic, mechanical, or other technological collection techniques or other forms of information technology, e.g., permitting electronic submission of responses.

Agency: Employment and Training Administration.

Title: Compendium of State Unemployment Insurance Operations, Organizations and Relationships.

OMB Number: 1205–0333 (reinstatement with change).

Frequency: Every three years.

Affected Public: State, Local or Tribal Government.

Number of Respondents: 53.

Estimated Time Per Respondent: 3 hours.

Total Burden Hours: 159.

Total Annualized capital/startup costs: 0.

Total annual costs (operating/maintaining systems or purchasing services): 0.

Description: The Compendium is a compilation of tables which identify various aspects of the administration and legal requirements of State Unemployment Insurance programs.

Agency: Employment and Training Administration.

Title: Statement of Selected Workloads and Expenditures of Federal Funds for Unemployment Compensation for Federal Employees and Ex-servicepersons.

OMB Number: 1205–0162 (reinstatement without change).

Frequency: Quarterly.

Affected Public: State, Local or Tribal Government.

Number of Respondents: 53.

Estimated Time Per Respondent: 6 hours.

Total Burden Hours: 1,272.

Total Annualized capital/startup costs: 0.

Total annual costs (operating/maintaining systems or purchasing services): 0.

Description: Federal and military agencies must reimburse the Federal Employees Compensation Account for the amount expended for benefits to former Federal (civilian) employees (UCFE) and ex-servicemembers (UCX). The report informs ETA of the amount to bill each such agency.

Theresa M. O'Malley,

Departmental Clearance Officer.

[FR Doc. 97–12511 Filed 5–12–97; 8:45 am]

BILLING CODE 4510–30–M

DEPARTMENT OF LABOR

Employment and Training Administration

Notice; Revised Schedule of Remuneration for the UCX Program

Under Section 8521(a)(2) of title 5 of the United States Code, the Secretary of Labor is required to issue from time to time a Schedule of Remuneration specifying the pay and allowances for each pay grade of members of the military services. The schedules are used to calculate the base period wages and benefits payable under the program of Unemployment Compensation for Ex-servicemembers (UCX Program).

The revised schedule published with this Notice reflects increases in military pay and allowances which were effective in January 1997.

Accordingly, the following new Schedule of Remuneration, issued pursuant to 20 CFR 614.12, applies to ''First Claims'' for UCX which are effective beginning with the first day of the first week which begins after April 5, 1997.

Pay grade	Monthly rate
(1) Commissioned Officers:	
O–10	$10,691
O–9	10,612
O–8	9,733
O–7	8,773
O–6	7,467
O–5	6,228
O–4	5,108
O–3	4,141
O–2	3,343
O–1	2,476
(2) Commissioned Officers With Over 4 Years Active Duty As An Enlisted Member Or Warrant Officer:	
O–3E	4,731
O–2E	3,964
O–1E	3,287
(3) Warrant Officers:	
W–5	5,529
W–4	4,763
W–3	3,976
W–2	3,362
W–1	2,895
(4) Enlisted Personnel:	
E–9	4,315
E–8	3,644
E–7	3,174
E–6	2,766
E–5	2,372
E–4	1,971
E–3	1,716
E–2	1,565
E–1	1,343

The publication of this new Schedule of Remuneration does not revoke any prior schedule or change the period of time any prior schedule was in effect.

Signed at Washington, D.C., on January 15, 1997.

Timothy M. Barnicle,

Assistant Secretary of Labor.

[FR Doc. 97–12512 Filed 5–12–97; 8:45 am]

BILLING CODE 4510–30–M

NATIONAL TRANSPORTATION SAFETY BOARD

Sunshine Act Meeting

TIME: 9:30 a.m., Tuesday, May 20, 1997.

PLACE: The Board Room, 5th Floor, 490 L'Enfant Plaza, SW., Washington, DC 20594.

STATUS: Open.

MATTERS TO BE DISCUSSED:

5745E—''Most Wanted'' Safety Recommendations Program Status Report and Suggested Modifications

6595A—Marine Accident Report: Grounding of the Liberian Passenger Ship STAR PRINCESS on Poundstone Rock, Lynn Canal, Alaska, June 23, 1995.

NEWS MEDIA CONTACT: Telephone: (202) 314–6100.

FOR MORE INFORMATION CONTACT: Bea Hardesty, (202) 314–6065.

May 9, 1997.

Bea Hardesty,

Federal Register Liaison Officer.

[FR Doc. 97–12695 Filed 5–9–97; 3:49 pm]

BILLING CODE 7533–01–P

NUCLEAR REGULATORY COMMISSION

[Docket Nos. 50–277 and 50–278]

PECO Energy Company, Public Service Electric and Gas Company, DELMARVA Power and Light Company, Atlantic City Electric Company; Notice of Withdrawal of Application for Amendment to Facility Operating License

The U.S. Nuclear Regulatory Commission (the Commission) has granted the request of PECO Energy Company (PECO, the licensee) to withdraw its

January 13, 1995, as supplemented by letter dated June 2, 1995, application for proposed amendment to Facility Operating License Nos. DPR–44 and DPR–56 for the Peach Bottom Atomic Power Station, Unit Nos. 2 and 3, located in York County, Pennsylvania.

The proposed amendment would have revised the frequency of calibration for the local power range monitor signals from every 6 weeks to every 2000 megawatt days per standard ton.

The Commission had previously issued a Notice of Consideration of Issuance of Amendment published in the **Federal Register** on March 29, 1995 (60 FR 16195). However, by letter dated March 19, 1997, the licensee withdrew the proposed change.

For further details with respect to this action, see the application for amendment dated January 13, 1995, as supplemented by letter dated June 2, 1995, and the licensee's letter dated March 19, 1997, which withdrew the application for license amendment. The above documents are available for public inspection at the Commission's Public Document Room, the Gelman Building, 2120 L Street, NW., Washington, DC, and at the local public document room located at the Government Publications Section, State Library of Pennsylvania, (REGIONAL DEPOSITORY) Education Building, Walnut Street and Commonwealth Avenue, Box 1601, Harrisburg, PA 17105.

Dated at Rockville, Maryland, this 7th day of May 1997.

For the Nuclear Regulatory Commission.

Joseph W. Shea,

Project Manager, Project Directorate I–2, Division of Reactor Projects—I/II, Office of Nuclear Reactor Regulation.

[FR Doc. 97–12465 Filed 5–12–97; 8:45 am]

BILLING CODE 7590–01–P

NUCLEAR REGULATORY COMMISSION

[Docket No. 50–388]

Pennsylvania Power and Light Company; & Notice of Issuance of Amendment to Facility Operating License

The U.S. Nuclear Regulatory Commission (Commission) has issued Amendment No. 139 to Facility Operating License No. NPF–22 issued to Pennsylvania Power & Light (the licensee), which revised the Technical Specifications for operation of the Susquehanna Steam Electric Station, Unit 2, located in Luzerne County, PA. The amendment is effective as of the date of issuance.

The amendment modified the Technical Specifications to authorize the use of ATRIUM–10 fuel in the reactor for the ninth refueling cycle for this plant.

The application for the amendment complies with the standards and requirements of the Atomic Energy Act of 1954, as amended (the Act), and the Commission's rules and regulations. The Commission has made appropriate findings as required by the Act and the Commission's rules and regulations in 10 CFR Chapter I, which are set forth in the license amendment.

Notice of Consideration of Issuance of Amendment to Facility Operating License and Opportunity for a Hearing in connection with this action was published in the **Federal Register** on March 18, 1997 (62 FR 12859). No request for a hearing or petition for leave to intervene was filed following this notice.

The Commission has prepared an Environmental Assessment related to the action and has determined not to prepare an environmental impact statement. Based upon the environmental assessment, the Commission has concluded that the issuance of the amendment will not have a significant effect on the quality of the human environment (62 FR 24669).

For further details with respect to the action see (1) the application for amendment dated December 18, 1996 as supplemented on February 26, March 12 and 27, April 3, 9, 16, 18, and 24, 1997, (2) Amendment No. 139 to License No. NPF–22, (3) the Commission's related Safety Evaluation, and (4) the Commission's Environmental Assessment. All of these items are available for public inspection at the Commission's Public Document Room, the Gelman Building, 2120 L Street NW., Washington, DC, and at the local public document room located at the Osterhout Free Library, Reference Department, 71 South Franklin Street, Wilkes-Barre, Pennsylvania 18701.

Dated at Rockville, Maryland, this 7th day of May 1997.

For the Nuclear Regulatory Commission.

Chester Poslusny, Sr.,

Project Manager, Project Directorate I–2, Division of Reactor Projects—I/II, Office of Nuclear Reactor Regulation.

[FR Doc. 97–12464 Filed 5–12–97; 8:45 am]

BILLING CODE 7590–01–P

NUCLEAR REGULATORY COMMISSION

[Docket No. 50–346]

Toledo Edison Company; Centerior Service Company and The Cleveland Electric Illuminating Company; Davis-Besse Nuclear Power Station, Unit No. 1; Environmental Assessment and Finding of no Significant Impact

The U.S. Nuclear Regulatory Commission (the Commission) is considering approval, by issuance of an order under 10 CFR 50.80, of the indirect transfer of Facility Operating License No. NPF–3, issued to Toledo Edison Company, et al., the licensees, for operation of the Davis-Besse Nuclear Power Station, Unit No. 1, located in Ottawa County, Ohio.

Environmental Assessment

Identification of the Proposed Action

The proposed action would consent to the indirect transfer of the license with respect to a proposed merger between Centerior Energy Corporation (the parent corporation for Toledo Edison Company, The Cleveland Electric Illuminating Company, and Centerior Service Company, the licensees for Davis-Besse) and Ohio Edison Company. The merger would result in the formation of a new single holding company, FirstEnergy Corporation.

The proposed action is in accordance with the Toledo Edison Company and Centerior Service Company request for approval dated December 13, 1996. Supplemental information was submitted by letter dated February 14, 1997.

The Need for the Proposed Action

The proposed action is required to obtain the necessary consent to the indirect transfer of the license discussed above. According to the licensees, the underlying transaction is needed to create a stronger, more competitive enterprise that is expected to save over $1 billion over the first 10 years of FirstEnergy operation.

Environmental Impacts of the Proposed Action

The Commission has reviewed the proposed action and concludes that there will be no changes to the facility or its operation as a result of the proposed action. Accordingly, the NRC staff concludes that there are no significant radiological environmental impacts associated with the proposed action.

With regard to potential nonradiological impacts, the proposed action does not affect nonradiological plant effluents and has no other environmental impact. Accordingly, the NRC staff concludes that there are no significant nonradiological environmental impacts associated with the proposed action.

Alternatives to the Proposed Action

As an alternative to the proposed action, the staff considered denial of the proposed action. Denial of the application would result in no change in current environmental impacts. The environmental impacts of the proposed action and the alternative action are similar.

Alternative Use of Resources

This action does not involve the use of any resources not previously considered in the Final Environmental Statement for the Davis-Besse Nuclear Power Station, Unit No. 1, dated October 1975.

Agencies and Persons Consulted

In accordance with its stated policy, on April 18, 1997, the staff consulted with the Ohio State official, Carol O'Claire, of the Ohio Emergency Management Agency, regarding the environmental impact of the proposed action. The State official had no comments.

Finding of No Significant Impact

Based upon the environmental assessment, the Commission concludes that the proposed action will not have a significant effect on the quality of the human environment. Accordingly, the Commission has determined not to prepare an environmental impact statement for the proposed action.

For further details with respect to the proposed action, see the Toledo Edison Company and Centerior Service Company submittal dated December 13, 1996, supplemented by letter dated February 14, 1997, which are available for public inspection at the Commission's Public Document Room, The Gelman Building, 2120 L Street, NW., Washington, DC, and at the local public document room located at the University of Toledo, William Carlson Library, Government Documents Collection, 2801 West Bancroft Avenue, Toledo, Ohio 43606.

Dated at Rockville, Maryland, this 7th day of May 1997.

For the Nuclear Regulatory Commission.

Allen G. Hansen,

Project Manager, Project Directorate III–3, Division of Reactor Projects III/IV, Office of Nuclear Reactor Regulation.

[FR Doc. 97–12466 Filed 5–12–97; 8:45 am]

BILLING CODE 7590–01–P

NUCLEAR REGULATORY COMMISSION

Proposed Generic Letter; Potential for Degradation of the Emergency Core Cooling System and the Containment Spray System After a Loss-of-Coolant Accident Because of Construction and Protective Coating Deficiencies and Foreign Material in the Containment (TAC N0. M97146)

AGENCY: Nuclear Regulatory Commission.

ACTION: Notice of opportunity for public comment.

SUMMARY: The Nuclear Regulatory Commission (NRC) is proposing to issue a generic letter to licensees of operating nuclear power reactors regarding the potential for degradation of the emergency core cooling system (ECCS) and the containment spray system (CSS) after a loss-of-coolant accident (LOCA) because of construction and protective coating deficiencies and foreign material that may be present in the containment. The NRC is issuing this generic letter to alert licensees to the fact that foreign material continues to be found inside operating nuclear power plant containments. During a design basis LOCA, this foreign material could block the ECCS or safety-related CSS flow path or damage ECCS or safety-related CSS equipment. In addition, construction deficiencies and problems with the material condition of ECCS systems, structures, and components (SSCs) inside the containment continue to be found. Design deficiencies also have been found which could potentially degrade the ECCS or safety-related CSS. No actions or information are requested regarding these issues. The NRC has issued many previous generic communications on this subject and expects licensees to have considered possible actions at their facilities to address these concerns.

The NRC is also issuing this generic letter to alert licensees to the problems associated with the material condition of protective coatings inside the containment and to request information under 10 CFR 50.54(f) to evaluate their programs for ensuring that protective coatings do not detach from their substrate during a design basis LOCA and interfere with the operation of the ECCS and the safety-related CSS. The NRC intends to use this information to assess whether current regulatory requirements are being correctly implemented and whether they should be revised.

The NRC expects addressees to ensure that the ECCS and the safety-related CSS remain capable of performing their intended safety functions. The NRC will conduct inspections to ensure compliance with existing licensing bases and respond to discovered inadequacies with aggressive enforcement consistent with its enforcement policy.

The NRC is seeking comment from interested parties regarding both the technical and regulatory aspects of the proposed generic letter presented under the **SUPPLEMENTARY INFORMATION** heading.

The proposed generic letter was endorsed by the Committee to Review Generic Requirements (CRGR) on May 5, 1997. The relevant information that was sent to the CRGR will be placed in the Public Document Room. The NRC will consider comments received from interested parties in the final evaluation of the proposed generic letter. The final evaluation by the NRC will include a review of the technical position and, as appropriate, an analysis of the value/impact on licensees. Should this generic letter be issued by the NRC, it will become available for public inspection in the Public Document Room.

DATES: Comment period expires June 27, 1997. Comments submitted after this date will be considered if it is practical to do so; assurance of consideration can only be given for those comments received on or before this date.

ADDRESSES: Submit written comments to Chief, Rules Review and Directives Branch, U.S. Nuclear Regulatory Commission, Washington, DC 20555. Written comments may also be delivered to 11545 Rockville Pike, Rockville, Maryland, from 7:30 am to 4:15 pm, Federal workdays. Copies of written comments received may be examined at the NRC Public Document Room, 2120 L Street, NW, (Lower Level), Washington, DC.

FOR FURTHER INFORMATION CONTACT: Richard M. Lobel (301) 415–2865 or James A. Davis (301) 415–2713.

SUPPLEMENTARY INFORMATION:

NRC Generic Letter 97–XX: Potential for Degradation of the Emergency Core Cooling System and the Containment Spray System After a Loss-of-Coolant Accident Because of Construction and Protective Coating Deficiencies and Foreign Material in the Containment

Addressees

All holders of operating licenses for nuclear power reactors, except those who have permanently ceased operations and have certified that fuel has been permanently removed from the reactor vessel.

Purpose

The U.S. Nuclear Regulatory Commission (NRC) is issuing this generic letter for several reasons. It alerts addressees that foreign material continues to be found inside operating nuclear power plant containments. During a design basis loss-of-coolant accident (DB LOCA), this foreign material could block an emergency core cooling system (ECCS) or safety-related containment spray system (CSS) flow path or damage ECCS or safety-related

CSS equipment. In addition, construction deficiencies and problems with the material condition of ECCS systems, structures, and components (SSCs) inside the containment continue to be found. Design deficiencies also have been found which could potentially degrade the ECCS or safety-related CSS. No actions or information are requested regarding these issues. The NRC has issued many previous generic communications on this subject, as discussed later in this generic letter, and expects the addressees to have considered possible actions at their facilities to address these concerns.

The NRC is also issuing this generic letter to alert the addressees to the problems associated with the material condition of protective coatings inside the containment and to request information under 10 CFR 50.54(f) to evaluate the addressees' programs for ensuring that protective coatings do not detach from their substrate during a DB LOCA and interfere with the operation of the ECCS and the safety-related CSS. The NRC intends to use this information to assess whether current regulatory requirements are being correctly implemented and whether they should be revised.

The NRC expects addressees to ensure that the ECCS and the safety-related CSS remain capable of performing their intended safety functions. The NRC will conduct inspections to ensure compliance with existing licensing bases and respond to discovered inadequacies with aggressive enforcement consistent with its enforcement policy.

Background

Foreign Material Exclusion, Construction Deficiencies and Design Deficiencies

In some recent events, foreign material, which could have affected the operation of the ECCS, was discovered inside the containment. As part of its review of these events, the NRC staff reviewed the history of such events and identified several related problems.

These events are discussed in Appendix A to this generic letter. A more complete list of the previous events is provided in Appendix B. As discussed in Appendix A, almost all of these events have been the subject of previous NRC generic communications and licensee event reports (LERs). The following types of problems continue to occur.

(1) Foreign material has been found in areas of the containment where it could be transported to the sump(s) or the suppression pool and potentially affect the operation of the ECCS or safety-related CSS. Such material has also been found in PWR sumps, in BWR suppression pools and downcomers, and in safety-related pumps and piping.

(2) Deficiencies have been found in the construction of the ECCS sumps or strainers. These deficiencies, which could have impaired the operation of the ECCS or the safety-related CSS, include missing screens, unintended openings in screens, and screens that are incorrectly sized.

(3) Problems have also been found with the material condition of sumps or suction strainers, potentially impairing the operation of the ECCS or safety-related CSS. These problems include deformed suction strainers and unintentional flow paths created by missing grout.

(4) Design deficiencies have been found, including valves in flow lines with clearances smaller than the sump screen mesh size and strainers with a flow area smaller than required.

(5) There have been two incidents, described in LERs, in which doors to emergency sump structures were left open when ECCS and safety-related CSS operability was required by the technical specifications.

The Discussion section of this generic letter discusses the regulatory and safety basis for these concerns.

It is evident that past NRC generic communications have not been completely effective in achieving an acceptable level of control of these problems. Nevertheless, the NRC expects that licensees will ensure that the ECCS and safety-related CSS remain capable of performing their intended safety functions.

The NRC plans to further emphasize this issue by conducting inspections to ensure compliance with the existing plant licensing basis and to respond to discovered inadequacies with aggressive enforcement consistent with the NRC enforcement policy.

Protective Coatings

Protective coatings inside nuclear power plant containments serve three general purposes. Protective coatings are applied to steel, aluminum, and galvanized surfaces to control corrosion. Protective coatings are applied to surfaces to control radioactive contamination levels. Protective coatings are also applied to protect surfaces from erosion and wear.

Protective coatings inside the containment and the regulatory requirements and guidance for their use are discussed in Appendix C.

Qualified protective coatings are capable of adhering to their substrate during a DB LOCA in order to minimize the amount of material which can reach the emergency sump screens or suction strainers and clog them. Not all coatings inside the containment are qualified. The amount of unqualified coatings must be limited since the unqualified coatings are assumed to detach from their substrates during a DB LOCA or steam line break and may be transported to the emergency sump screens or suction strainers.

In some cases, coatings which should have been qualified failed during normal operation. Some of these events are discussed in Appendix D.

Discussion

NRC regulations in 10 CFR 50.46 require that licensees design their ECCS to provide long-term cooling capability so that the core temperature can be maintained at an acceptably low value and decay heat can be removed for the extended period required by the long-lived radioactivity remaining in the core. This criterion must be demonstrated while assuming the most conservative single failure. Some addressees may credit CSSs for pressure and radioactive source term reduction as part of the licensing basis. These CSSs may also take suction from the suppression pools or emergency sumps.

Foreign materials, degraded coatings inside the containment that detach from their substrate, and ECCS components not consistent with their design basis, along with LOCA-generated debris, are potential common-cause failure mechanisms which may clog suction strainers, sump screens, filters, nozzles, and small-clearance flow paths in the ECCS and safety-related CSS and thereby interfere with the long-term cooling function.

Qualified coatings used inside containment must be demonstrated to be capable of withstanding the environmental conditions of a postulated DB LOCA without detaching from their substrates (detached coatings may then be transported to the sumps or strainers and cause or contribute to flow blockage). The LERs and NRC inspection reports described in Appendix D of this generic letter provide evidence of weaknesses in addressee programs with regard to applications of protective coatings for Class I service. These weaknesses include deficiencies in addressee programs to (1) Control the preparation and cleanliness of the substrate before the coatings are applied, (2) control the preparation of paint before its application, (3) control the dry film thickness of coatings applied to the substrate, (4) monitor for and control the

use of excessive amounts of unqualified coatings inside the containment, (5) monitor the status of ''qualified'' coatings already applied to the surfaces of the containment structure and to other equipment inside the containment, and (6) assess the safety significance of coatings inside containment that have been determined to detach from their substrate and to repair these coatings, if necessary.

The NRC has issued a number of generic communications on various aspects of the potential for the loss of the ECCS and safety-related CSS as a result of strainer clogging and debris blockage. These generic communications are listed in Appendix E. The basic safety concern applies to both PWRs and BWRs. These events, discussed in these generic communications, as well as similar events described in LERs and NRC inspection reports, demonstrate the need for a strong foreign material exclusion (FME) program in all areas of PWRs and BWRs that may contain materials that could interfere with the successful operation of the ECCS. Other events demonstrate the need to ensure the correct design and to maintain the material condition of emergency core cooling system and safety-related containment spray system SSCs, including the suppression pools, ECCS strainers and sumps, and the protective coatings inside containment.

The requirements of 10 CFR Part 50, Appendix B, are germane to this issue.

The maintenance rule, 10 CFR 50.65, ''Requirements for monitoring the effectiveness of maintenance at nuclear power plants,'' includes in its scope all safety-related SSCs, and those non-safety-related SSCs that fall into the following categories: (1) Those that are relied upon to mitigate accidents or transients or are used in plant emergency operating procedures; (2) those whose failure could prevent safety-related SSCs from fulfilling their safety-related function; and (3) those whose failure could cause a reactor scram or an actuation of a safety-related system.

The PWR sumps and BWR strainers are included within the scope of the maintenance rule.

To the extent that protective coatings meet these scoping criteria, they are within the scope of the maintenance rule.

The maintenance rule requires that licensees monitor the effectiveness of maintenance for these protective coatings (as discrete systems or components or as part of any SSC) in accordance with paragraph (a)(1) or (a)(2) of 10 CFR 50.65, as appropriate.

The NRC expects all addressees to have programs and procedures in place to ensure that the ECCS and the safety-related CSS are not degraded by foreign material in the containment, that the ECCS and the safety-related CSS are consistent with their design and licensing bases, and that sumps, strainers, and coatings are in good material condition. The staff may evaluate the condition of sumps, strainers and protective coatings as a part of maintenance rule inspections.

The NRC has conducted numerous inspections in the areas addressed by this generic letter; for example, the NRC issued Technical Instruction 2515/125, ''Foreign Material Exclusion Controls,'' on August 25, 1994. Violations have been identified and appropriate enforcement action has been taken in accordance with the NRC's Enforcement Policy (NUREG–1600, ''General Statement of Policy and Procedures for NRC Enforcement Actions: Enforcement Policy''). A list of significant enforcement actions is provided in Appendix F of this generic letter. The NRC intends to continue to conduct inspections in order to ensure compliance with the existing licensing basis and to respond to discovered inadequacies with aggressive enforcement consistent with the NRC Enforcement Policy.

The NRC will consider violations in this area as significant regulatory failures and will, accordingly, consider categorizing inadequacies at least as Severity Level III violations. The NRC will also consider the long history of generic communications on this issue as prior notice to licensees when the agency assesses civil penalties in accordance with Section VI.B.2 of the Enforcement Policy. Finally, notwithstanding the normal civil penalty assessment, the NRC will consider whether the circumstances of the case warrant escalation of enforcement sanctions in accordance with Section VII.A.1 of the Enforcement Policy.

If in the course of assessing the effectiveness of the plant-specifc FME program or preparing a response to the requested information it is determined that a facility is not in compliance with the Commission's rules or regulations, the addressees are expected to take whatever actions are deemed appropriate in accordance with requirements stated in Appendix B to 10 CFR 50 and as required by the plant technical specifications to restore the facility to compliance.

Required Information

Within 75 days of the date of this generic letter, addressees are required to submit a written response that includes the following information:

(1) A summary description of the plant-specific program implemented to ensure that Class I protective coatings used inside the containment are procured, applied, and maintained in compliance with applicable regulatory requirements and the plant-specific licensing basis for the facility. Include a discussion of how the plant-specific program meets the applicable criteria of 10 CFR Part 50, Appendix B, as well as information regarding any applicable standards, plant-specific procedures or other guidance used for (a) Controlling the procurement of coatings and paints used at the facility; (b) the qualification testing of protective coatings; and (c) surface preparation, application, surveillance, and maintenance activities for protective coatings.

(2) Information demonstrating compliance with your plant-specific licensing basis related to tracking the amount of unqualified coatings inside the containment and for assessing the impact of potential coating debris on the operation of safety-related SSCs during a postulated DB LOCA.

Include the following information in the discussion to the extent it is available:

(a) The date and findings of the last assessment of coatings, and the planned date of the next assessment of coatings

(b) The limit for the amount of unqualified protective coatings allowed in the containment and how this limit is determined. Discuss any conservatisms in the method used to determine this limit.

(c) If a commercial-grade dedication program is being used at your facility for dedicating commercial-grade coatings for Class I applications inside the containment, describe why the program is sufficient to qualify such a coating for Class I service. Identify what standards or other guidance are currently being used to dedicate containment coatings at your facility.

(d) If a commercial-grade dedication program is not being used at your facility for qualifying and dedicating commercial-grade coatings for use inside containment for Class I applications, provide the regulatory and safety basis for not controlling these coatings in accordance with such a program. Additionally, explain why the facility's licensing basis does not require such a program.

Address the required written information to the U.S. Nuclear

Regulatory Commission, ATTN: Document Control Desk, Washington, DC 20555–0001, under oath or affirmation under the provisions of Section 182a, Atomic Energy Act of 1954, as amended, and 10 CFR 50.54(f). This information will enable the Commission to determine whether the license should be modified, suspended, or revoked. In addition, submit a copy of the written information to the appropriate regional administrator.

Backfit Discussion

This generic letter requires information from the addressees under the provisions of Section 182a of the Atomic Energy Act of 1954, as amended, and 10 CFR Part 50.54(f). This generic letter does not constitute a backfit as defined in 10 CFR 50.109(a)(1) since it does not impose modifications of or additions to systems, structures, and components or to design or operation of an addressee's facility. It also does not impose an interpretation of the Commission's rules that is either new or different from a previous staff position. The staff has, therefore, not performed a backfit analysis.

Reasons for Information Request

This generic letter transmits an information request pursuant to the provisions of Section 182a of the Atomic Energy Act of 1954, as amended, and 10 CFR 50.54(f) for the purpose of verifying compliance with applicable regulatory requirements. Specifically, the requested information will enable the NRC staff to determine whether the addressees' protective coatings inside the containment comply and conform with the current licensing basis for their respective facilities and whether the regulatory requirements pursuant to 10 CFR 50.46 are met.

Protective coatings are necessary inside containment to control radioactive contamination and to protect surfaces from erosion and corrosion. Detachment of the coatings from the substrate may make the ECCS unable to satisfy the requirement of 10 CFR 50.46(b)(5) to provide long-term cooling and make the safety-related CSS unable to satisfy the plant-specific licensing basis by controlling containment pressure and radioactivity following a LOCA.

Appendix A—Discussion of Events Related to ECCS Sumps and Strainers Including Foreign Material Inside the Containment and Construction and Design Deficiencies

On November 16, 1988, the NRC issued Information Notice (IN) 88–87, ''Pump Wear and Foreign Objects in Plant Piping Systems,'' concerning several incidents in which the potential existed for a flow reduction as a result of pump wear and foreign objects in plant piping systems. In one of these incidents, the licensee found foreign objects in a temporary pump discharge cone strainer. The licensee investigated further and found foreign objects, dating to early construction modifications, in the sump. In addition, various deficiencies were found in the sump screens.

On November 21, 1989, the NRC issued IN 89–77, ''Debris in Containment Emergency Sumps and Incorrect Screen Configurations,'' which discussed loose parts and debris in the containment sumps of three pressurized-water reactors (PWRs), Surry Units 1 and 2 and Trojan. At Surry Units 1 and 2, some of the debris was large enough to cause pump damage or flow degradation. In addition, some of the screens had gaps large enough to allow additional loose material to enter the sump. The licensee found that screens that separate the redundant trains of the inside recirculation spray system were missing at both units. At Trojan, the licensee discovered debris in the sump. Some debris was found after containment closeout. In addition, still later, before startup, the NRC identified missing portions of the sump top screen and inner screen. IN 89–77 also reported that in 1980 the Trojan licensee found a welding rod jammed between the impeller and the casing ring of a residual heat removal pump.

On December 23, 1992, the NRC issued IN 92–85, ''Potential Failures of Emergency Core Cooling Systems Caused by Foreign Material Blockage,'' which alerted licensees to events at two PWRs. In these events, foreign material blocked flow paths within the ECCS safety injection and containment spray pumps so that the pumps could not produce adequate flow.

On April 26, 1993, and May 6, 1993, the NRC issued IN 93–34, ''Potential for Loss of Emergency Cooling Function Due to a Combination of Operational and Post-LOCA Debris in Containment,'' and its supplement. In these information notices, the NRC described several instances of clogged ECCS pump strainers, including two events at the Perry Nuclear Power Plant, a domestic boiling-water reactor (BWR). In the first Perry event, residual heat removal (RHR) strainers were clogged by operational debris consisting of ''general maintenance-type material and a coating of fine dirt.'' After cleaning the strainers in January 1993, the licensee discovered that RHR A and B strainers were deformed. The strainers were replaced. The second Perry event involved an RHR pump test which was run after a plant transient in March 1993. Pump suction pressure dropped to 0 KPa (0 psig). No change in pump flow rate was observed. Material found on the strainer screen was analyzed and found to consist of glass fibers from temporary drywell cooling filters that had been inadvertently dropped into the suppression pool and corrosion products that had been filtered from the pool by the glass fibers adhering to the surface of the strainer. This significantly increased the pressure drop across the strainer.

In response to these two events, the licensee for Perry increased the suction strainer area, provided suction strainer backflush capability, and improved measures to keep the suppression pool clean.

On May 11, 1993, the NRC issued Bulletin 93–02, ''Debris Plugging of Emergency Core Cooling Suction Strainers,'' which requested that both PWR and BWR addressees (1) identify fibrous air filters and other temporary sources of fibrous material in containment not designed to withstand a loss-of-coolant accident (LOCA) and (2) take prompt action to remove the foreign matter and ensure the functional capability of the ECCS. All addressees have responded to the bulletin, and the NRC staff has completed its review of their responses.

The licensee for Arkansas Nuclear One, Unit 2, reported by Licensee Event Report (LER) 93–002–00, dated November 22, 1993, that the containment sump integrity was inadequate to keep foreign material out. Holes in the masonry grout below the sump screen assembly would have let water into the sump without being screened. The licensee attributed this condition to failure to implement design basis requirements for the sump during initial plant construction. The holes were difficult to detect. The holes appeared to be part of the design because of their uniform spacing and because they were ''somewhat recessed * * * such that to see the holes they must be viewed from near the floor or from a significant distance away from the sump.''

On August 12, 1994, the NRC issued IN 94–57, ''Debris in Containment and the Residual Heat Removal System,'' which alerted operating reactor licensees to additional instances of degradation of ECCS components because of debris. At River Bend Station, the licensee found a plastic bag on an RHR suction strainer. At Quad Cities Station, Unit 1, on July 14, 1994, the remains of a plastic bag were found shredded and caught within the anti-cavitation trim of an RHR test return valve. Subsequent to that event at Quad Cities, Unit 1, the licensee observed reduced flow from the ''C'' RHR pump and, upon further investigation, found a 10-cm (4-in.) diameter wire brush wheel and a piece of metal wrapped around a vane of the pump.

On January 25, 1995, the NRC issued IN 95–06, ''Potential Blockage of Safety-Related Strainers by Material Brought Inside Containment,'' which discussed a concern that plastic or fibrous material, brought inside the containment to reduce the spread of loose contamination, to identify equipment, or for cleaning purposes, may collect on screens and strainers and block core cooling systems. Several examples were cited.

On October 4, 1995, the NRC issued IN 95–47, ''Unexpected Opening of a Safety/Relief Valve and Complications Involving Suppression Pool Cooling Strainer Blockage,'' which discussed an event on September 11, 1995, at the Limerick Generating Station, Unit 1, during which a safety/relief valve discharged to the suppression pool. The operators started an RHR pump in the suppression pool cooling mode. After 30 minutes, fluctuating motor current and flow were observed. Subsequent inspection of the strainers found them covered with a ''mat'' of fibrous material and

sludge (corrosion products) from the suppression pool. The licensee removed approximately 635 kg (1400 lb) of debris from the Unit 1 pool. A similar amount of debris had been removed earlier from the Unit 2 pool. A supplement to IN 95–47 was issued on November 30, 1995.

On October 17, 1995, the NRC issued NRC Bulletin 95–02, ''Potential Clogging of a Residual Heat Removal (RHR) Pump Strainer While Operating in Suppression Pool Cooling Mode,'' which discussed the Limerick Unit 1 event and requested that BWR addressees review the operability of their ECCS and other pumps that draw suction from the suppression pool while performing their safety function. The addressees' evaluations were to take into consideration suppression pool cleanliness, suction strainer cleanliness, and the effectiveness of the addressees' foreign material exclusion (FME) practices. In addition, BWR addressees were requested to implement appropriate procedural modifications and other actions (e.g., suppression pool cleaning), as necessary, in order to minimize the amounts of foreign material in the suppression pool, drywell, and containment. BWR addressees were also requested to verify their operability evaluation through appropriate testing and inspection.

On February 10, 1996, the NRC issued IN 96–10, ''Potential Blockage by Debris of Safety System Piping Which Is Not Used During Normal Operation or Tested During Surveillances,'' which discussed debris blockage in ECCS lines taking suction from the containment sumps at a PWR in Spain. In one of the two partially blocked lines, almost half the flow area of the pipe was blocked off; the other line was less blocked. Upon further investigation, Spanish regulators found that many sections of piping in both PWRs and BWRs are only called upon to function during accident conditions and are not used during normal operation or tested during functional surveillance tests. The licensee in this case concluded that the safety significance was low because the partial blockage of the lines would not have prevented the ECCS from providing sufficient core cooling. However, it was also noted that some of the debris could have been entrained in the water flow and could have detrimental effects on other parts of the system (e.g., pump and valve components and heat exchangers).

In addition, in LER 96–005, the licensee for the H.B. Robinson Steam Electric Plant, Unit 2, reported finding an item of debris larger than the ⅜-inch diameter of the holes in the containment spray nozzle in a pipe in the sump.

In LER 96–007, the licensee for Diablo Canyon Nuclear Power Plant, Unit 1, reported a radiograph inspection finding that openings in the Diablo Canyon plant's 3.81-cm (1½ in.) centrifugal charging pump runout protection manual throttle valves and safety injection (SI) to cold-leg 5.08-cm (2-in.) manual throttle valves were less than the 0.673-cm (0.265-inch) diagonal opening in the containment recirculation sump debris screen. Therefore, debris could potentially block charging or SI flow through these throttle valves during the recirculation phase of a LOCA. The licensee concluded that even with a postulated blockage of the throttle valves, the RHR system flow by itself would be sufficient to maintain adequate core cooling during recirculation following a postulated accident. As a corrective action, the Diablo Canyon licensee stated in LER 96–007 that the system would be modified to ensure that the throttle valve clearance is greater than the maximum sump screen opening.

After reviewing an Institute of Nuclear Power Operations (INPO) operational experience report on this event, the licensee for Millstone Nuclear Station, Unit 2, determined that eight throttle valves in the high-pressure safety-injection (HPSI) system injection lines were susceptible to the failure mechanism described in the Diablo Canyon Nuclear Power Plant LER 96–007. This situation is discussed in NRC IN 96–27, ''Potential Clogging of High Pressure Safety Injection Throttle Valves During Recirculation,'' dated May 1, 1996. The Millstone Unit 2 licensee concluded that the type of debris that would pass through the screen openings would tend to be of low density and low structural strength and that material of this type would be reduced in size as it passed through the HPSI and containment spray pumps. In addition, the differential pressure across the HPSI system injection valves and containment spray nozzles would tend to force through the valves or nozzles any material that is ''marginally capable'' of obstructing flow. These conclusions may be plant specific and may not be applicable to other designs. The Millstone Unit 2 licensee committed to replace the sump screen with one that is consistent with the original design.

On May 6, 1996, the NRC issued Bulletin 96–03, ''Potential Plugging of Emergency Core Cooling Suction Strainers by Debris in Boiling-Water Reactors,'' which requested actions by BWR addressees to resolve the issue of BWR strainer blockage because of excessive buildup of debris from insulation, corrosion products, and other particulates, such as paint chips and concrete dust. The bulletin proposed four options for dealing with this issue: (1) install large-capacity passive strainers, (2) install self-cleaning strainers, (3) install a safety-related backflush system that relies on operator action to remove debris from the surface of the strainer to keep it from clogging, or (4) propose another approach that offers an equivalent level of assurance that the ECCS will be able to perform its safety function following a LOCA. BWR addressees were requested to implement the requested actions of Bulletin 96–03 by the end of the first refueling outage beginning after January 1, 1997.

On October 30, 1996, the NRC issued IN 96–59, ''Potential Degradation of Post Loss-of-Coolant Recirculation Capability as a Result of Debris,'' to alert addressees that the suppression pool and associated components of two BWRs, LaSalle County Station, Unit 2, and Nine Mile Point Nuclear Station, Unit 2, were found to contain foreign objects that could have impaired successful operation of emergency safety systems that used water from the suppression pool. In particular, debris was found in the downcomers (large-diameter pipes connecting the drywell to the suppression pool). Although the licensee for Nine Mile Point, Unit 2, had previously cleaned the suppression pool, the downcomers had not been inspected. In addition, the licensee found debris covers in place on seven of the eight downcomers located in the pedestal area directly under the reactor vessel. These debris covers had been in place since construction. LER 96–11–00 attributes this oversight to inadequate managerial methods and to environmental conditions since the ''accessibility of the pedestal area downcomers requires removal of grating in the undervessel area and climbing down to the dimly lit subpile floor. The plastic covers on the downcomers are not visible from the grating elevation because of the missile shield plates above the downcomer floor penetrations. Furthermore, since the first refueling outage, access to this area has been limited because of the high contamination levels and general ALARA [as low as reasonably achievable radiation dose] considerations.''

Although the NRC has not previously discussed the subject in a generic communication, licensee event reports have been submitted regarding the loss of control of containment sump access hatches, leaving them open during periods when ECCS sump integrity was required. For example, the licensee for Diablo Canyon Nuclear Power Plant, Unit 1, in LER 89–014–01, discussed the opening of the sump access hatch at various times at power ''without adequate consideration of ECCS operability.'' LER 96–006 (Watts Bar Nuclear Plant, Unit 1) reported that an operator observed a containment sump (trash screen) door open while ECCS operability was required.

Appendix B—Operational Events Involving ECCS and Safety-Related Containment Spray Recirculation Flow Paths

Plant/report	Problems discussed
Haddam Neck NRC Inspection Report 50–213/96–08.	Six 55 drums of sludge with varying amounts of debris removed from ECCS sump (July 1975).
North Anna Units 1 and 2 LER 84–006–00	Galvanized ductwork painted with unqualified paint.
Millstone Unit 1 LER 88–004–00	Existing suction strainers smaller than allowed by criteria of RG 1.82 Rev.1. Strainers will be replaced with larger strainers if Integrated Safety Assessment Program criteria met.

Plant/report	Problems discussed
Surry Power Station Units 1 and 2 LER 88–017–01 IN 88–87 IN 89–77.	1. Foreign material from construction activities found in cone strainer of recirculation spray system. Material could have rendered system inoperable. 2. Gaps in sump screens since initial construction.
Trojan Nuclear Plant LER 89–016–01 IN 89–77	1. Wire mesh screen on top of sump trash rack not installed. 2. Screen damage. 3. Significant amount of debris discovered in the sump. Could have caused loss of a portion of ECCS.
Diablo Canyon Unit 1 LER 89–014–01 IN 89–77	1. Debris in sump. 2. As-built sump configuration not in accordance with design. 3. Safety function would not have been impaired.
TMI Unit 1. LER 90–002–00	Modification of sump access hatches left holes in top of sump screen cage. Potentially could damage pumps or clog spray nozzles.
McGuire Unit 1 LER 90–0112–00	Loose material discovered in upper containment prior to entry into Mode 4. Items found would not have made ECCS inoperable.
Calvert Cliffs Units 1 and 2 NRC Inspection Report March 5, 1991.	Unit 2 sump found to contain 25 lbs dirt, weld slag, pebbles, etc. Inspection of Unit 1 found less than 1 lb. debris. Possible minor damage to ECCS pumps.
Diablo Canyon Unit 2 LER 91–012–00	1. Numerous instances of material left unattended or abandoned in sump level of containment (tools, plastic tool bags, clothing, etc.). 2. Material would not have prevented ECCS recirculation function.
H.B. Robinson Unit 2 LER 92–013–00	''B'' safety injection pump reduced flow due to blockage in minimum flow recirculation check valve and flow orifice on July 8, 1992. ''A'' pump OK. Foreign material also found in refueling water storage tank (RWST).
H.B. Robinson Unit 2 LER 92–018–00	On August 24, 1992, following a reactor trip, ''A'' and ''B'' safety injection pumps inoperable due to reduced flow. Found during unscheduled surveillance to demonstrate safety injection (SI) operability.
Pt. Beach Unit 2 LER 92–003–01 IN 92–85	September 18, 1992: During technical specifications (inservice) testing of the ''A'' containment spray pump, the pump was declared inoperable. A foam rubber plug was blocking pump suction. Plug removed and pump tested satisfactorily. One train of Unit 2 residual heat removal, safety injection and containment spray systems inoperable for entire operating cycle. Plug was part of a cleanliness barrier.
Perry Nuclear Plant LER 93–011–00	May 1992: During refueling outage foreign objects discovered in the containment side of the suppression pool. Fouling of residual heat removal (RHR) strainers found. Strainers not cleaned. January 1993: RHR ''A'' and ''B'' strainers found deformed (collapsed inward in the direction of the fluid flow. Strainers replaced. March 1993: RHR ''A'' and ''B'' operated in suppression pool cooling mode. Pump suction pressure decreased. Could have compromised long-term RHR operation.
Susquehanna Units 1 and 2 LER 93–007–00 (Voluntary).	1. Assessing impact of debris and corrosion products adhering to fibrous materials that may be dislodged by a pipe break. 2. Developing procedures to backflush strainers.
Sequoyah Unit 2 LER 93–026–00	Design basis limit for unqualified coatings inside containment had been exceeded. Additional quantity of unqualified coatings on reactor coolant pump motor platform discovered. Path to ECCS sump. Screens will be installed before startup.
ANO Unit 2 LER 93–002–00 IN 89–77 Supplement 1.	Seven unscreened holes found in masonry grout below screen assembly of ECCS sump. Could potentially degrade both trains of the high pressure coolant injection system and containment spray. Had previously inspected sump because of IN 89–77. Did not discover problem. NRC estimate of incremental increase in core damage: 3×10^{-04}.
ANO Unit 1 LER 93–005–00 IN 89–77 Supplement 1.	1. 22 unscreened 6×3 pipe openings at base of sump curb. Occurred as a result of modification prior to initial operation. 2. Tears in screen. 3. Floor drains leading to sump not screened. 4. Licensee estimated increase in core damage frequency 5×10^{-05}.
San Onofre Units 1 and 2 LER 93–010–00 (Voluntary).	1. Irregular annular gap (approximately 6) surrounding 8 low temperature overpressure protection system discharge line penetrating horizontal steel cover plate. 2. Engineering analysis concluded both sump trains operable.
Vermont Yankee LER 93–015–00	1. Low pressure core spray suction strainers smaller than calculations assumed. Net positive suction head calculations performed in 1986 following change to NUKON™ insulation invalid. 2. Strainers replaced with larger strainers.
South Texas Unit 1/2 LER 94–001–00	1. Sump screen openings from initial construction discovered. Frame plate at floor warped, creating several openings approximately ⅝″. Additional ¼″ gaps discovered. Licensee concluded there was no safety significance to these deficiencies based on ECCS pump tests performed by the manufacturer.
Point Beach Unit 1 NRC Inspection Report May 6, 1994.	NRC inspector found grout deterioration under sump screens. Could result in flow bypass or particles of grout entering ECCS pumps.
LaSalle Unit 1 IN 94–57	April 26 and May 11, 1994: Divers inspecting suppression pool during outage found operational debris.
River Bend IN 94–57	June 13, 1994: Plant in refueling outage. Foreign material found in suppression pool. Plastic bag removed from ''B'' RHR pump suction strainer. Other objects: tools, grinding wheel, scaffolding knuckle, step off pad.

Plant/report	Problems discussed
Quad Cities Unit 1 IN 94–57	July 14, 1994: Post-maintenance test of ''A'' loop RHR indicated a plugged torus cooling test return valve. Inspection discovered remains of shredded plastic bag in anti-cavitation trim installed during a recent outage. July 23, 1994: 4″ diameter wire brush and a piece of metal found wrapped around a vane of the ''C'' RHR pump.
Browns Ferry Units 1/2/3 May 20, 1994 Letter to NRC.	1. Unqualified coatings on T quenchers in suppression pool. 2. Continued operation acceptable. 3. Will remove coatings next refueling outage.
Palisades Plant LER 94–014–00	Signs, adhesive tape, and labels with potential to block the ECCS sump were found in containment. Containment spray and HPSI pumps declared inoperable. Engineering analysis concluded that the sump screen would not be significantly blocked.
Watts Bar Units 1 and 2 NRC Inspection Report 50–390 and 50–391/94–59 September 28, 1994.	Screens installed around reactor coolant pump motors to catch unqualified paint not adequately located to contain all unqualified coatings.
Indian Point Unit 2 LER 95–005–00	Licensee discovered portions of floor coating on containment Elevation 46 had lifted and cracked. In other locations, floor coating cracked when stepped on. Licensee concluded that sump function would not be compromised.
Susquehanna Units 1 and 2 LER 93–007–001 September 11, 1995.	Licensee took actions to address clogging ECCS suction strainers: removal of fibrous insulation from high energy line break areas, testing to characterize the debris threat to strainer blockage, quantification of corrosion products on structural steel in wetwell, establishment of a comprehensive analysis of containment debris effects. Coating and insulation procedures contain steps to reduce potential for strainer blockage.
Prairie Island Unit 2 NRC Inspection Report 50–282/05–009.	Broken labels for pipe hangers and labels affixed to wall with degrading adhesive discovered by NRC inspector after licensee closeout inspection. Licensee concluded that this would not affect operability of ECCS.
Palisades NRC Inspection Report 50–225/95–008.	Unsecured material stored on the landings of stairways. Broken glass and pieces of signboard and other ''unauthorized'' material found in area designated debris-free.
Limerick Unit 1 NRC Inspection Report 50–352/96–04.	Debris was allowed to collect in suppression pool so that ''A'' RHR pump was rendered inoperable when safety/relief valve lifted on September 11, 1995.
Duane Arnold NRC Inspection Report 50–331/95–003.	Foreign material exclusion controls inadequate in drywell. Hardhats and debris noted.
Foreign PWR NRC IN 96–10	1. Operator found debris in the sump. 2. Two of 4 ECCS lines taking suction from the sump were partially blocked by debris. Debris present since plant construction.
Millstone Unit 2 LER 96–008	Ten locations inconsistent with the specified screen opening size were identified. Placed plant outside original design basis. Sump screen replaced.
Watts Bar Unit 1 LER 96–006–00	Operator observed containment sump trash screen door was open when plant was in MODE 4 and ECCS required to be operable.
Calvert Cliffs Units 1 and 2 LER 96–003–00	Several holes identified in each units' containment sump screen larger than described in the Final Safety Analysis Report. Holes field-installed for transmitter tubing. Concluded not a threat to plant safety.
Diablo Canyon Unit 1 LER 96–007–00	Various debris that could pass through the containment sump screen could be larger than minimum clearances in the 1½″ centrifugal charging pump runout protection manual throttle valves and 2″ SI cold leg manual throttle valves.
Haddam Neck LER 96–014–00 NRC Inspection Report 50–213/96–08.	1. Discrepancies in sump screen mesh sizing, screen fitup, and method of attachment discovered. Sump screen replaced. Sump will be inspected after every refueling outage. Licensee reported that this condition could have prevented the fulfillment of a safety function. 2. Five 55-gallon drums of sludge removed from ECCS sump. Also, plastic, nuts and bolts, tie wraps, and pencil.
Big Rock Point NRC Inspection Report 50–155/96–004.	''Housekeeping in containment in the area under the emergency condenser and the reactor depressurization system isolation valves was poor.''
Catawba Unit 1 NRC Inspection Report 50–413/96–11.	Six floor drains inside crane wall were not covered with screen that had a finer mesh than the sump screen. The holes were ¼″ rather than ⅛″ holes. Crane wall penetrations close to containment floor could allow the transport of debris to the sump screen. Penetrations sealed.
Millstone Unit 2 LER 50–336/96–08 NRC Inspection Report 50–336/96–08.	Containment sump screens had been incorrectly constructed so that larger debris than analyzed could pass through the ECCS.
Vogtle Unit 2 NRC Inspection Report 50–425/96–11 LER 96–007–00.	Containment integrity was established prior to startup. Upon subsequent containment entries personnel discovered various items of loose debris. Material removed while in MODE 4. Material would have resulted in inadequate NPSH for the ''B'' train of RHR and containment spray. NPSH for the ''A'' train of RHR and containment spray would have been adequate.
Nine Mile Point Unit 2 NRC Inspection Report 50–410/96–11 NRC Event Report 31172.	A significant amount of debris was found in the suppression pool and downcomers during refueling outage 5. The licensee's preliminary evaluation concluded that operability of ECCS could have been compromised.
LaSalle Unit 2 NRC Event Report 31159 LER 96–009–00.	Substantive foreign material recovered from suppression pool and downcomers which would challenge the operability of the ECCS. Items most likely from construction or early outages.
Millstone Unit 3 LER 96–039–00	1. Construction debris discovered in containment recirculation spray system (RSS) containment sump and in RSS suction lines. 2. Gaps discovered in RSS sump cover plates. 3. Later inspection found other sump enclosure gaps. 4. Bolts and clips missing from the vortex suppression grating 5. Debris found in all 4 RSS pump suction lines.

Plant/report	Problems discussed
H.B. Robinson Unit 2 LER 96–005–00	1. Openings found in sump screens that could allow debris above a certain size to enter the sump. Could have prevented the screens from performing their design function. 2. An item of debris in excess of ⅜″ diameter limit on containment spray nozzles found in 14'' sump drain pipe.
Zion Unit 1 LER 97–001–00	Two 1-inch holes were not in the sump cover as detailed on drawings. Holes allow air to escape as sump fills. Potential to hinder flow to RHR pump suction during a LOCA.
Zion Unit 2 NRC Inspection Report 50–295/96–20 50–304/96–20 March 24, 1997.	1. Miscellaneous debris located throughout containment. 2. Containment recirculation sump screen damage. 3. Peeling and flaking paint on containment surfaces.
Sequoyah Unit 1 10 CFR 50.72 Report 32139 April 11, 1997.	During shutdown on March 22, 1997, an oil cloth was introduced to containment which, if it had come free of its restraints, could have blocked one or both refueling drains so that water in upper containment may not have flowed freely to lower level of containment where sump is located.
Millstone Unit 1 10 CFR 50.72 Report 32161 April 16, 1997.	Most of the coating in the torus is unqualified, which could affect the operability of the low-pressure coolant injection and core spray systems.

Appendix C—Background On Regulatory Basis for Protective Coatings

This appendix discusses the regulatory basis for protective coatings inside the containment. Industry standards and regulatory guidance are included in this discussion. However, this discussion is only for information. Addressees should continue to comply with the plant licensing basis.

At nuclear power plants, coatings and paints serve to (1) protect ferritic steel, austenitic steel, galvanized (zinc-coated) steel, or aluminum surfaces against corrosive environments; (2) protect metallic, concrete, or masonry surfaces against erosion or wear during plant operation; and (3) allow for ease of decontamination of radioactive nuclides from the containment wall and floor surfaces. These coatings may come in inorganic forms, such as zinc-based paints, or organic forms, such as organic latex, polyurethane, or epoxy coatings.

There are two kinds of coatings applications at domestic nuclear power plants:

(1) Class I Service Applications, which are applications of coatings or paints to SSCs that are essential to prevent or mitigate the consequences of postulated accidents. Protective coatings applied to the interior wall and floor surfaces of the containment structure and to the exterior surfaces of most of the SSCs located inside the containment structure normally fall into this category.[1]

(2) Class II Service Applications, which are applications of coatings or paints to SSCs that are essential to the achievement of normal operating performance.

Protective coatings applied to the interior surfaces of the containment structure and to SSCs inside the containment are considered qualified coatings if they have been subjected to physical property (adhesion) tests under conditions that simulate the projected environmental conditions of a postulated design basis (DB) LOCA and have demonstrated the capability of maintaining their adhesive properties under these simulated conditions. These tests are typically conducted in accordance with the guidelines, practices, test methods, and acceptance criteria specified in applicable industry standard procedures (such as those issued by the American National Standards Institute, Inc. [ANSI], or the American Society for Testing and Materials [ASTM]) for coatings applications. However, the licensing basis for Class I coating applications may contain exceptions to or provide alternative means of meeting the intent of the test methods in these standards, provided an adequate safety basis was given to and accepted by the NRC staff as to why accepting the exceptions or alternatives could not have the potential to affect the performance of the ECCS and safety-related CSS during a postulated DB LOCA. In regard to protective coatings used for Class I service applications inside the containment, the staff normally concludes that a coating system is acceptable for service if it has been demonstrated that the coating system is qualified to maintain its integrity during a postulated DB LOCA and if the programs for controlling applications of coating systems for Class I service applications are implemented in accordance with a quality assurance (QA) program that meets the requirements of Appendix B to Part 50 of Title 10 of the *Code of Federal Regulations* (10 CFR).

Protective coatings that have not been successfully tested in accordance with the provisions in the applicable ANSI or ASTM standards or have not met the acceptance criteria of the standards are considered to be ''unqualified''; that is, they are assumed to be incapable of maintaining their adhesive properties during a postulated DB LOCA. The staff normally assumes that ''unqualified'' coatings applied to the interior surfaces of the containment structure and to SSCs inside the containment structure will form solid debris products under DB LOCA conditions. These debris products should, therefore, be evaluated for their potential to clog ECCS sump screens or strainers and their effect on the operability of safety-related pumps taking suction from ECCS sumps and suppression pools during a postulated DB LOCA.

The NRC has issued Regulatory Guide (RG) 1.54–1973, ''Quality Assurance Requirements for Protective Coatings Applied to Water-Cooled Nuclear Power Plants,'' to give the industry an acceptable method for complying with the QA requirements of 10 CFR Part 50, Appendix B, as they relate to protective coating systems applied to ferritic steel, aluminum, stainless steel, zinc-coated (galvanized) steel, or masonry surfaces of water-cooled nuclear power reactors. In RG 1.54–1973, the NRC stated that the guidelines for coating applications in ANSI Standard N101.4–1972, ''Quality Assurance for Protective Coatings Applied to Nuclear Facilities,'' as subject to the additional regulatory positions in RG 1.54–1973, delineate acceptable QA criteria for providing confidence that ''shop or field coating work [will] perform satisfactorily in service.'' The quality assurance provisions stated in ANSI Standard N101.4–1972, as endorsed by the staff in RG 1.54–1973, are considered by the staff to provide an adequate basis for complying with the pertinent QA requirements of 10 CFR Part 50, Appendix B. These standards delineate the type of tests to be performed to qualify a given coating for nuclear applications. However, how a licensee implements its program for controlling activities related to protective coating applications at a particular nuclear plant depends on the plant's licensing basis. Although neither RG 1.54–1973 nor the applicable ANSI standards are NRC requirements, they do delineate acceptable programs and practices for controlling coatings application activities at nuclear power plants.

ANSI Standard N101.4–1972 provides recommended guidelines for implementing QA programs regarding coating applications at domestic nuclear power plants. ANSI Standard N101.4–1972, as endorsed in RG 1.54–1973, delineates recommended guidelines and criteria for establishing QA and quality control programs for coating activities, including activities for controlling work conditions, for controlling the ambient environmental conditions for coating applications, for controlling selection and procurement activities for coatings, for controlling preparation of substrates, for establishing QA procedures for coating applications, for qualifying personnel involved in coating preparation, application, and inspection activities, and for establishing coating inspection guidelines and acceptance criteria. The scope of ANSI Standard N101.4–1972, as endorsed by RG 1.54–1973, also includes recommended QA records on coatings activities.

[1] Coatings applied to non-safety-related small-scale components inside the containment structure, such as small lighting fixtures or small non-safety-related power buses, are an exception to this statement.

ANSI Standard N101.4–1972 states that ANSI Standard N5.9, ''Protective Coatings (Paints) for the Nuclear Industry'' (later reissued as ANSI Standard N512) and ANSI Standard N101.2, ''Protective Coatings (Paints) for Light-Water Nuclear Reactor Containment Facilities,'' are additional acceptable standards for governing activities related to the selection and evaluation of protective coatings applied both in the shop (i.e., at vendor or manufacturer facilities) or in the field.

RG 1.54 is currently undergoing a major revision (it was last revised in 1973). Many of the documents referenced in RG 1.54 are outdated and have been replaced by newer ASTM or ANSI standards. ASTM Committee D–33, ''Coatings for Power Generation Facilities,'' has developed the standards that replace many of the standards referenced in RG 1.54–1973. At the request of the NRC staff, this committee is currently developing a maintenance standard for qualified coatings. This standard will cover inspection of existing coatings, application of new coatings over the original substrate (steel, concrete, galvanized steel, aluminum), new coatings over a substrate-old coating interface, and new coatings over old, qualified coatings. When this standard is approved, RG 1.54–1973 will be revised to reflect current standards. Utilizing more modern industry standards for protective coatings may require a change to the existing licensing basis. Use of these standards must conform with existing NRC requirements, including 10 CFR 50, Appendix B.

Appendix D—Chronology of Incidents and Activities Related to Protective Coatings

In January 1997, Commonwealth Edison Company (ComEd), the licensee for the Zion Nuclear Plant, Unit 2, discovered flaking and unqualified paint applied to the containment surfaces (IN 97–13, ''Deficient Conditions Associated With Protective Coatings At Nuclear Power Plants''). The peeling of the protective coatings was determined to occur at the horizontal junction lines located between the concrete shells that were used in construction of the Zion Unit 2 containment structure. ComEd estimated that the total weight of degraded coatings (peeling paint) was approximately 445 N (100 lb). ComEd also initially estimated that an additional 557–650 m^2 (6000–7000 ft^2) of coatings on surfaces inside containment were not qualified to withstand the environmental conditions of a postulated DB LOCA, in accordance with the testing criteria of ANSI Standard N512–1974. ComEd determined that the peeling of the qualified coatings on the containment surfaces was due to improper surface preparation, resulting in inadequate adhesion of the coating following application.

ComEd corrected the condition of the paint by removing all of the degraded ''qualified'' paint inside the Zion Unit 2 containment and by removing all of the additional ''unqualified'' paints that were determined to be located within the analytically determined zone of influence.[2] ComEd also performed 33 random adhesion or ''pull'' tests on the remaining, intact, ''qualified'' paint inside the containment structure. All of these tests were performed in accordance with the applicable testing requirements specified in ANSI Standard N512–1974. All of the tests exhibited ''pulls'' in excess of the 890 N (200 lb) required by the standard, thus demonstrating that the remaining qualified coatings were acceptable for service during the next operating cycle.

On March 10, 1995, Consolidated Edison Company (ConEd), the licensee for Indian Point Station, Unit 2, reported in LER 95–005–00 that paint was peeling off the floor at the 14-meter (46-ft) elevation of the Indian Point Unit 2 containment structure. The paint was applied to the 14-meter (46-foot) floor elevation during the 1993 refueling outage as an interim measure for reducing personnel radiation exposures until a more permanent floor resurfacing could be accomplished. ConEd determined that the following factors contributed to the cracking and delamination of the paint: (1) in some areas, the paint had been applied in excess of the dry film thickness recommended by the manufacturer of the paint; (2) during preparation of the paint, too much paint thinner was added to the paint, which led to an excessive amount of coating shrinkage when the paint dried; (3) no scarification of the floor surface was performed before application of the paint to remove old coatings, greases, or silicone or wax buildups from the floor surface; and (4) the painters had not been trained to apply the particular brand of paint. ConEd determined the root cause of the coatings event to be the painters' failure to follow controlled procedures for applying the particular brand of paint. To address the nonconforming condition of the paint, ConEd removed all of the old paint from the 14-m (46-foot) floor elevation and repainted the floor elevation with a qualified coating in accordance with the station's procedural requirements and the manufacturer's recommendations for the paint. ConEd also retrained the paint specialists to reindoctrinate them regarding the importance of complying with the station's procedures and standards for coating applications.

On October 18, 1993, the Tennessee Valley Authority (TVA) reported in LER 93–026 the use of unidentified coatings on the surfaces of the No. 4 reactor coolant pump (RCP) motor housings at the Sequoyah Nuclear Plant, Units 1 and 2. These coatings were not accounted for in the licensee's QA Uncontrolled Coatings Log. TVA determined that the No. 4 RCP motor housings are completely within the zones of influence of the containment sumps at both Sequoyah units. The unqualified coating on each No. 4 RCP motor housing amounted to an additional 13.3 m^2 (143 ft^2); this amount was not accounted for by TVA in its 1986 assessment of unqualified coatings on the RCP motor housings. The omission is significant because the maximum amount of uncontrolled coatings allowed by the Uncontrolled Coatings Logs for the Sequoyah units is 5.3 m^2 (56.5 ft^2); this is the maximum amount of uncontrolled coatings that can be in the zone of influence of the containment sump without having the potential to affect the operability of the ECCS and safety-related CSS.

The NRC summarized its review of the safety significance of the amount of unqualified paint on the No. 4 RCP motor housings in Inspection Reports (IR) Nos. 50–327/93–42 and 50–328/93–42 and in IR Nos. 50–327/94–25 and 50–328/94–25, dated November 9, 1993, and September 12, 1994, respectively. In IR Nos. 50–327/94–25 and 50–328/94–25, the NRC concluded that if the unqualified coatings on or within the RCP motor housings failed, they could potentially migrate to the containment sump during a postulated DB LOCA and impair the performance of the containment ECCS and the containment spray system during the event. TVA addressed this issue by modifying the RCP motor housings to include ''catch'' screens designed to prevent coating material on the motor housings from reaching the strainers in the containment sumps.

On July 2, 1993, and September 11, 1995, the Pennsylvania Power and Light Company (PP&L) issued LERs 93–007–00 and 93–007–01, respectively, to summarize its reassessment of ECCS performance at Susquehanna Steam Electric Station, Units 1 and 2, during a postulated DB LOCA. In its initial analysis of ECCS performance during a postulated DB LOCA, PP&L determined that sources of fibrous insulating materials would not have the potential to impair the operability of the ECCS at Susquehanna Units 1 and 2. However, PP&L's initial analysis did not account for ''unqualified'' coatings as potential sources of debris.

In LER 93–007–00, PP&L discussed the effect of debris on the performance of the ECCS during a postulated DB LOCA. In the LER, PP&L stated that its increased awareness of the quantity of unqualified coatings and corrosion products (''other material'') inside the containment was a key factor in deciding to reassess the sources of debris inside the Susquehanna Units 1 and 2 containments during a postulated DB LOCA. PP&L considered fibrous insulation material, unqualified coatings, and corrosion products as the sources of debris. PP&L's evaluation of the debris during the postulated event contained the following uncertainties: (1) uncertainty in qualifying the sources of debris within the containment, (2) uncertainty in determining the amount of debris that could be dislodged during a postulated DB LOCA, and (3) uncertainty in establishing exactly how the debris would be transported from its source to the ECCS strainers during the postulated event. Because of these uncertainties, PP&L stated in the licensee event report that if unqualified coatings and corrosion products were included among the materials that could become sources of debris, some potential existed for complete blockage of the suppression pool strainers during the event.

PP&L addressed this issue, in part, by requiring that DB LOCA qualification testing be performed on all inorganic zinc paints inside the Susquehanna containments. PP&L

[2] All of the unqualified paint within the containment sump's zone of influence was removed, with the exception of approximately 112 ft^2 of unqualified paint applied to small components, such as lighting fixtures or name tags.

also implemented improved administrative housekeeping and inventory controls and issued an administrative coating specification that restricted any coatings applied inside the containment structures to qualified coatings.

Appendix E—Generic Communications Issued by the NRC on the Subject of ECCS and Safety-Related CSS Sump and Strainer Blockage

Generic Letter 85–22,''Potential for Loss of Post LOCA Recirculation Capability Due to Insulation Debris Blockage,'' December 3, 1985.

IN 88–28, ''Potential for Loss of Post LOCA Recirculation Capability Due to Insulation Debris Blockage,'' May 19, 1988.

IN 89–77, ''Debris in Containment Emergency Sumps and Incorrect Screen Configurations,'' November 21, 1989.

IN 92–71, ''Partial Blockage of Suppression Pool Strainers at a Foreign BWR,'' September 30, 1992.

IN 92–85, ''Potential Failures of Emergency Core Cooling Systems by Foreign Material Blockage,'' December 23, 1992.

IN 93–34, ''Potential for Loss of Emergency Core Cooling Function Due to a Combination of Operational and Post LOCA Debris in Containment,'' April 26, 1993.

IN 93–34, Supplement 1, ''Potential for Loss of Emergency Cooling Function Due to a Combination of Operational and Post LOCA Debris in Containment,'' May 6, 1993.

Bulletin 93–02, ''Debris Plugging of Emergency Core Cooling Suction Strainers,'' May 11, 1993.

NRC Bulletin 93–02, Supplement 1, ''Debris Plugging of Emergency Core Cooling Suction Strainers,'' February 18, 1994.

IN 94–57, ''Debris in Containment and the Residual Heat Removal System,'' August 12, 1994.

IN 95–06, ''Potential Blockage of Safety Related Strainers by Material Brought Inside Containment,'' January 25, 1995.

IN 95–47, ''Unexpected Opening of a Safety/Relief Valve and Complications Involving Suppression Pool Cooling Strainer Blockage,'' October 4, 1995.

Bulletin 95–02, ''Unexpected Clogging of a Residual Heat Removal (RHR) Pump Strainer While Operating in the Suppression Pool Cooling Mode,'' October 17, 1995.

IN 95–47 Revision 1: ''Unexpected Opening of a Safety/Relief Valve and Complications Involving Suppression Pool Cooling Strainer Blockage,'' November 30, 1995.

IN 96–10, ''Potential Blockage by Debris of Safety System Piping Which is Not Used During Normal Operation or Tested During Surveillances,'' February 13, 1996.

Bulletin 96–03, ''Potential Plugging of Emergency Core Cooling Suction Strainers by Debris in Boiling Water Reactors,'' May 6, 1996.

IN 96–27, ''Potential Clogging of High Pressure Safety Injection Throttle Valves During Recirculation,'' May 1, 1996.

IN 96–55, ''Inadequate Net Positive Suction Head of Emergency Core Cooling and Containment Heat Removal Pumps Under Design Basis Accident Conditions,'' October 22, 1996.

IN 96–59, ''Potential Degradation of Post LOCA Recirculation Capability as a Result of Debris,'' October 30, 1996

IN 97–13, ''Deficient Conditions Associated With Protective Coatings at Nuclear Power Plants'', March 24, 1997.

Appendix F—Enforcement Actions Taken by the NRC Dealing With Construction and Protective Coatings Deficiencies and Foreign Material Exclusion

Plant	Date of inspection	Severity level/civil penalty	Description
Surry Unit 1	7/30/88	3 $50,000	Debris in containment sump.
Trojan	8/8/89	2 $280,000	Inoperable recirculation sump.
Diablo Canyon	12/8/89	3 $50,000	1. Gaps in sump screens 2. Opening sump access hatches when sump operability is required 3. Debris in sump.
Perry	6/23/93	3 $200,000	Clogged RHR strainers.
Arkansas Nuclear One Unit 1	10/25/93	3 $0	Degradation of containment sump screens.
Browns Ferry Unit 2	5/17/94	4 $0	Unqualified protective coatings applied to safety/relief valve discharge quenchers.
Point Beach Unit 2	10/12/92	3 $75,000	Foreign material in containment spray.
Sequoyah Units 1 and 2	9/3/94	4 $0	Unqualified coatings on RCP motor stand.
Nine Mile Point Unit 2	April 10, 1997*.	3 **$200,000	Debris in suppression pool and downcomers.

*Date enforcement action issued.
**Combined with other enforcement actions.

Dated at Rockville, Maryland, this 8th day of May, 1997.

For the Nuclear Regulatory Commission.

Marylee M. Slosson,

Acting Director, Division of Reactor Program Management, Office of Nuclear Reactor Regulation.

[FR Doc. 97–12467 Filed 5–12–97; 8:45 am]

BILLING CODE 7590–01–P

NUCLEAR REGULATORY COMMISSION

Sunshine Act Meeting

AGENCY HOLDING THE MEETING: Nuclear Regulatory Commission.

DATE: Weeks of May 12, 19, 26, and June 2, 1997.

PLACE: Commissioners' Conference Room, 11555 Rockville Pike, Rockville, Maryland.

STATUS: Public and closed.

MATTERS TO BE CONSIDERED:

Week of May 12

Monday, May 12

1:30 p.m.
Meeting with Foreign Dignitaries (Closed—Ex.1)

3:00 p.m.
Meeting with Boiling Water Reactor Vessel and Internals Project (BWRVIP) and NRC Staff (Public Meeting)

Tuesday, May 13

2:00 p.m.

Briefing by National and Wyoming Mining Associations (Public Meeting)

Wednesday, May 14

1:30 p.m.
Briefing on Status of Activities with CNWRA and HLW Program (Public Meeting)
3:00 p.m.
Briefing on Program to Improve Regulatory Effectiveness (Public Meeting)

Thursday, May 15

9:30 a.m.
Briefing on Status of HLW Program (Public Meeting)
2:00 p.m.
Briefing on Performance Assessment Progress in HLW, LLW, and SDMP (Public Meeting)
3:30 p.m.
Affirmation Session (Public Meeting) (if needed)
3:50 p.m.
Classified Security Briefing (Closed—Ex. 1)

Week of May 19—Tentative

Tuesday, May 20

11:30 a.m.
Affirmation Session (Public Meeting) (if needed)
2:00 p.m.
Meeting with Advisory Committee on Nuclear Waste (ACNW) (Public Meeting)
(Contact: John Larkins, 301–415–7360)

Week of May 26—Tentative

There are no meetings scheduled for the week of May 26.

Week of June 2—Tentative

Wednesday, June 4

11:30 a.m.
Affirmation Session (Public Meeting) (if needed)

The schedule for Commission meetings is subject to change on short notice. To verify the status of meetings call (recording)—(301) 415–1292.

CONTACT PERSON FOR MORE INFORMATION: Bill Hill, (301) 415–1661.

The NRC Commission Meeting Schedule can be found on the Internet at: http://www.nrc.gov/SECY/smj/schedule.htm

This notice is distributed by mail to several hundred subscribers; if you no longer wish to receive it, or would like to be added to it, please contact the Office of the Secretary, Attn: Operations Branch, Washington, D.C. 20555 (301–415–1661).

In addition, distribution of this meeting notice over the internet system is available. If you are interested in receiving this Commission meeting schedule electronically, please send an electronic message to wmh@nrc.gov or dkw@nrc.gov.

* * * * *

Dated: May 9, 1997.

William M. Hill, Jr.,

SECY Tracking Officer, Office of the Secretary.

[FR Doc. 97–12685 Filed 5–9–97; 2:04 pm]

BILLING CODE 7590–01–M

NUCLEAR WASTE TECHNICAL REVIEW BOARD

Notice of Meeting

Board Meeting

June 25–26, 1997—Las Vegas, Nevada: program status and the viability assessment, repository performance and uncertainties of the natural barrier system, performance and uncertainties of the repository design and the engineered barrier system, post-viability assessment plans for scientific studies and exploration at Yucca Mountain, performance confirmation,and an update on transportation planning.

Pursuant to its authority under section 5051 of Public Law 100–203, the Nuclear Waste Policy Amendments Act of 1987, the Nuclear Waste Technical Review Board will hold its summer meeting on Wednesday and Thursday, June 25–26, 1997, in Las Vegas, Nevada. The meeting will be held at the Crowne Plaza Hotel, 4255 S. Paradise Road, Las Vegas, Nevada, 89109; Tel (702) 369–4400, Fax (702) 369–3770. To receive the preferred rate, reservations must be made by May 30, 1997. The meeting is open to the public and will begin at 8:30 a.m. both days.

Tentative Agenda

The morning session on Wednesday, June 25, will begin with an update on the status of the Department of Energy's (DOE) high-level waste management program. The meeting then will focus on many of the DOE's ongoing activities related to the viability assessment planned for 1998, including repository performance and uncertainties in the natural barrier system. The Board will hear presentations by representatives of the Department of Energy (DOE) and its contractors on how performance assessment views the natural barriers, the DOE's unsaturated zone expert elicitation project, and saturated zone flow and transport.

The afternoon session will look at the performance and uncertainties associated with repository design and the engineered barrier system. Presentations will include the status of regulatory development, the DOE waste containment and isolation strategy, repository design and operations, waste package design, and how performance assessment views waste package performance.

On Thursday morning, June 26, the Board will hear presentations on the projected plans and costs of post-viability assessment scientific studies and exploration at Yucca Mountain, projected costs of repository construction and operation, performance confirmation after licensing, and an update on transportation planning.

Time has been set aside for public comment and questions on both days. To ensure that everyone wishing to speak is provided time to do so, the Board encourages those who have comments to sign the Public Comment Register, which will be located at the registration table. A time limit may have to be set on the length of individual remarks; however, written comments of any length may be submitted for the record.

Transcripts

Transcripts of this meeting will be available via e-mail, on computer disk, or on a library-loan basis in paper format from Davonya Barnes, Board staff, beginning July 24, 1997. For further information, contact Frank Randall, External Affairs, 2300 Clarendon Boulevard, Suite 1300, Arlington, Virginia 22201–3367; (Tel) 703–235–4473; (Fax) 703–235–4495; (E-mail info@nwtrb.gov.

The Nuclear Waste Technical Review Board was created by Congress in the Nuclear Waste Policy Amendments Act of 1987 to evaluate the technical and scientific validity of activities undertaken by the DOE in its program to manage the disposal of the nation's spent nuclear fuel and defense high-level waste. In the same legislation, Congress directed the DOE to characterize a site at Yucca Mountain, Nevada, for its suitability as a potential location for a permanent repository for the disposal of that waste.

Dated: May 7, 1997.

William Barnard,

Executive Director, Nuclear Waste Technical Review Board.

[FR Doc. 97–12491 Filed 5–12–97; 8:45 am]

BILLING CODE 6820–AM–M

RAILROAD RETIREMENT BOARD

Agency Forms Submitted for OMB Review

Summary: In accordance with the Paperwork Reduction Act of 1995 (44 U.S.C. Chapter 35), the Railroad Retirement Board has submitted the following proposal(s) for the collection of information to the Office of Management and Budget for review and approval.

Summary of Proposal(s)

(1) *Collection title:* Application for Hospital Insurance Benefits.

(2) *Form(s) submitted:* AA–6, AA–7, AA–8.

(3) *OMB Number:* 3220–0082.

(4) *Expiration date of current OMB clearance:* 6/30/1997.

(5) *Type of request:* Extension of a currently approved collection.

(6) *Respondents:* Individuals or households.

(7) *Estimated annual number of respondents:* 240.

(8) *Total annual responses:* 240.

(9) *Total annual reporting hours:* 32.

(10) *Collection description:* The Railroad Retirement Board administers the Medicare program for persons covered by the railroad retirement system. The collection obtains information from non-retired employees and survivor applicants that is needed for enrollment in the plan.

Additional Information or Comments: Copies of the form and supporting documents can be obtained from Chuck Mierzwa, the agency clearance officer (312–751–3363). Comments regarding the information collection should be addressed to Ronald J. Hodapp, Railroad Retirement Board, 844 North Rush Street, Chicago, Illinois 60611–2092 and the OMB reviewer, Laura Oliven (202–395–7316), Office of Management and Budget, Room 10230, New Executive Office Building, Washington, D.C. 20503.

Chuck Mierzwa,

Clearance Officer.

[FR Doc. 97–12459 Filed 5–12–97; 8:45 am]

BILLING CODE 7905–01–M

RAILROAD RETIREMENT BOARD

Sunshine Act Meeting; Notice of Public Meeting

Notice is hereby given that the Railroad Retirement Board will hold a meeting on May 21, 1997, 9:00 a.m., at the Board's meeting room on the 8th floor of its headquarters building, 844 North Rush Street, Chicago, Illinois 60611. The agenda for this meeting follows:

(1) Military Service Reimbursement.

(2) Potential Option for Co-Location of Branch Offices.

(3) Posting of a Training Class for GS–11 Claims Examiners (Disability).

(4) Regulations—Part 211, Pay for Time Lost—Cost/Benefit Analysis.

(5) Year 2000 Issues.

(6) Labor Member Truth in Budgeting Status Report.

The entire meeting will be open to the public. The person to contact for more information is Beatrice Ezerski, Secretary to the Board, Phone No. 312–751–4920.

Dated: May 8, 1997.

Beatrice Ezerski,

Secretary to the Board.

[FR Doc. 97–12616 Filed 5–9–97; 11:20 am]

BILLING CODE 7905–01–M

SECURITIES AND EXCHANGE COMMISSION

[Release No. 34–38568; File No. SR–DCC–97–02]

Self-Regulatory Organizations; Delta Clearing Corp.; Notice of Filing of Proposed Rule Change Relating to Multiple Brokers for Options Transactions

May 2, 1997.

Pursuant to Section 19(b)(1) of the Securities Exchange Act of 1934, as amended (''Exchange Act''),[1] is hereby given that on March 11, 1997, Delta Clearing Corp. (''Delta'') filed with the Securities and Exchange Commission (''Commission'') the proposed rule change as described in Items I, II and III below, which items have been prepared primarily by Delta. The Commission is publishing this notice to solicit comments on the proposed rule change from interested persons.

I. Self-Regulatory Organization's Statement of the Terms of Substance of the Proposed Rule Change.

The proposed rule change consists of changes to Delta's procedures for options trading (''Options Procedures'') to authorize brokers approved by Delta which satisfy the conditions set forth in the Options Procedures to submit trade reports for options transactions on behalf of participants.

[1] 15 U.S.C. 78s(b)(1).

II. Self-Regulatory Organization's Statement of the Purpose of, and Statutory Basis for, the Proposed Rule Change

In its filing with the Commission, Delta included statements concerning the purposes of and basis for the purposed rule change and discussed any comments it received on the proposed rule change. The text of these statements may be examined at the places specified in Item IV below. Delta has prepared summaries, set forth in sections A, B, and C below, of the most significant aspects of such statements.[2]

A. Self-Regulatory Organization's Statement of the Purpose of, and Statutory Basis for, the Proposed Rule Change

The proposed rule change will add a new Article XX, entitled ''Authorized Brokers,'' to Delta's Options Procedures to permit Delta to accept from authorized brokers for clearance and settlement options transactions entered into by participants through the facilities of authorized brokers. When Delta was originally registered, it accepted options transactions from participants that were entered into directly between the two participants or from RMJ Options Trading Corp. (''RMJ'') options transactions that were entered into through the facilities of RMJ. More recently, Delta replaced RMJ as the sole options broker it accepted trades from with Euro Broker Maxcor Inc.[3] As a result of this proposal, Delta will be able to receive data on options transactions that are entered into through the facilities of and reported to Delta by any options broker that meets Delta's standards and that Delta has specifically authorized to perform such functions.

A ''broker'' is defined in the procedures as an entity registered under Section 15(b) or Section 15C of the Exchange Act that is engaged in the business of effecting transactions in securities for the account of others within the meaning of Section 3(a)(4) of the Exchange Act. An ''authorized broker'' is defined as a broker that has been authorized by Delta in accordance with these procedures to broker options transactions among participants.

Although the proposal will allow Delta to designate certain options brokers as authorized to submit trades,

[2] The Commission has modified the text of the summaries submitted by Delta.

[3] Securities Exchange Act Release No. 37149 (April 29, 1996), 61 FR 20298. Under that proposed rule change, references to RMJ in Delta's rules were deemed to be references to the options broker currently performing the duties and responsibilities of RMJ under the Options Procedures.

such brokers would not be accorded the status of a ''participant'' under Delta's rules, and the Options Procedures make no provision for an authorized broker to maintain money or securities accounts at Delta. Section 2004 of the Options Procedures states, ''[T]he role of the Authorized Broker under these Procedures shall be limited to the brokering of transactions among Participants in the clearing system and the submission of Authorized Broker Trade Reports in accordance with Section 401 of these Procedures.'' Accordingly, no provision has been made for margin requirements or liquidation of an authorized broker's accounts in the event of the broker's suspension. Nevertheless, the procedures will identify the minimum requirements a brokers' broker must meet and the procedures Delta must follow in the event it determines to deny access to an authorized broker or suspend an authorized broker's access to Delta's clearing system.

The conditions for designation as an authorized broker are set out in Section 2001 of the Options Procedures. The qualifications necessary for designation as an authorized broker will include the following: (1) The broker must be properly registered with the Commission under Section 15(b) or 15C of the Exchange Act and be a member in good standing of the National Association of Securities Dealers, Inc.; (2) the broker must indicate an interest in brokering transactions to be cleared through Delta's clearing system and have the operational capacity to do so; (3) the broker must review the requirements of Exchange Act Rule 17a–23 and execute a certificate confirming its compliance therewith; (4) the broker must be in compliance with all net capital requirements; (5) the broker must maintain the books and records required to be maintained under the Options Procedures; (6) the broker must employ personnel and utilize procedures which are sufficient to discharge its obligations in a timely and efficient manner; and (7) absent special circumstances, neither the broker nor any associated person shall be subject to a statutory disqualification.

Section 401 of the procedures will be amended to provide for submission of trade reports by authorized brokers in the case of brokered transactions or by participants in the case of nonbrokered transactions. Delta's current Options Procedures provide for submission of trade reports by participants or by RMJ in the case of brokered transactions. Under Delta's existing Options Procedures, RMJ is not required to report transactions by telephone to Delta's clearing bank (except for transactions expiring on the trade date) while participants are required to report transactions by telephone. In addition, under Delta's existing Options Procedures, the time by which RMJ is required to report transactions expiring on the trade date is later than the time by which participants are required to report such trades. The Options Procedures, as proposed to be revised, provide for uniform reporting requirements including use of the current time frames for nonbrokered transactions for all participants and authorized brokers. References to RMJ are deleted in Section 401 of the Options Procedures and in all other sections of the procedures.

Article XX will provide that the following sections of the Options Procedures, which have been and continue to be applicable to participants, are also made applicable to authorized brokers:

(i) Section 206, which requires the delivery of financial reports and audits;

(ii) Section 208, setting forth the admission procedure for an applicant;

(iii) Section 209(a), requiring an authorized broker prior to admission as an authorized broker to execute an agreement agreeing to be bound by Delta's procedures;

(iv) Sections 209(b)(iv) and (v), pursuant to which an authorized broker agrees to permit inspection of its books and records (limited to the extent relating to transactions cleared through Delta's clearing system) and to indemnify Delta and its principals from default or misconduct by the authorized broker;

(v) Section 210(b), authorizing an authorized broker to withdraw voluntarily by delivering written notice to Delta and Delta's clearing bank;

(vi) Sections 301 and 303, requiring among other things that the authorized broker maintain an office during business hours at which a representative of the authorized broker would be available to take all action necessary for conducting business through the clearing system and maintain computer and communication equipment capable of supporting software provided by Delta enabling computer to computer communication of reports and other notices;

(vii) Article XII (Sections 1201, 1202, and 1208), providing for suspension of authorized brokers upon the terms set forth therein;

(viii) Article XV, applying the force majeure provisions to authorized brokers;

(ix) Article XVII, pursuant to which the authorized brokers agree to submit to the jurisdiction of the courts of the State of New York or the United States courts for the Southern District of New York; and

(x) The definition of authorized representative.

The revised procedures also will provide in Section 2002 that every authorized broker shall keep records with respect to each transaction submitted by such authorized broker to be effected through Delta's clearing system showing the name of the participants to the transaction.

Delta believes that the foregoing changes are consistent with the terms of a letter dated May 29, 1996, from Robert C. Mendelson, Esq. to Gordon K. Fuller, Esq., Special Counsel, Office of Market Supervision, and the response letter dated June 28, 1996, from Sheila C. Slevin, Esq., Assistant Director of the Division of Market Regulation, to Mr. Mendelson. Footnote 3 to Mr. Mendelson's letter provides that each broker admitted as a broker in the clearing system must:

> (i) be registered as a broker-dealer registered with the Commission pursuant to Section 15(b) of the Act or registered as a government securities broker or dealer pursuant to Section 15C of the Act, (ii) be a member of the National Association of Securities Dealers, Inc., (iii) have indicated an interest in brokering transactions to be cleared through Delta and have the operational capacity to do so, and (iv) have represented to Delta that it has examined its obligations under Rule 17a–23 and is either exempt from the requirements thereof or has complied with the requirements thereof.

Section 2001 as proposed to be adopted incorporates these criteria.

Brokers will be approved separately as authorized brokers for options transactions and repurchase agreement transactions cleared through Delta but may be approved to act as an authorized broker for both options and repurchase agreement transactions. Initially, Delta anticipates that there will be three entities which will apply for admission and be admitted as authorized brokers for the options clearing system.

Delta expects that the approval of authorized brokers for options transactions may increase the volume of options transactions cleared through Delta; however, Delta expects to clear no more than two hundred options contracts per day as a consequence of admitting additional authorized brokers. In light of the fact that the approval of authorized brokers may result in increased trading volume and the fact that Delta presently clears options and repurchase agreement transactions on two different hardware platforms, Delta has adopted interim internal operating

procedures providing for manual oversight of participant and system exposure limits.

Delta believes the proposed rule change is consistent with the requirements of the Exchange Act and the rules and regulations thereunder applicable to Delta and in particular with Section 17A(b)(3)(F) of the Exchange Act[4] which requires that a clearing agency be organized and its rules be designed to promote the prompt and accurate clearance and settlement of securities transactions, to safeguard funds and securities in its possession and control, and to remove impediments to and perfect the mechanism of a national system for the prompt and accurate clearance and settlement of securities transactions. Delta believes that the introduction of multiple brokers will permit wider utilization of the clearing system by participants.

B. Self-Regulatory Organization's Statement on Burden on Competition

Delta does not believe that the proposed rule change will impose any burden on competition not necessary or appropriate in furtherance of the purpose of the Exchange Act.

C. Self-Regulatory Organization's Statement on Comments on the Proposed Rule Change Received from Members, Participants or Others

Comments were neither solicited nor received. Delta will notify the Commission of any written comments received by Delta.

III. Date of Effectiveness of the Proposed Rule Change and Timing for Commission Actions

Within thirty-five days of the date of publication of this notice in the **Federal Register** or within such longer period (i) as the Commission may designate up to ninety days of such date if it finds such longer period to be appropriate and publishes its reasons for so finding or (ii) as to which the self-regulatory organization consents, the Commission will:

(A) by order approve such proposed rule change or

(B) institute proceedings to determine whether the proposed rule change should be disapproved.

IV. Solicitation of Comments

Interested persons are invited to submit written data, views, and arguments concerning the foregoing. Persons making written submissions should file six copies thereof with the Secretary, Securities and Exchange Commission, 450 Fifth Street, N.W., Washington, D.C. 20549. Copies of the submission, all subsequent amendments, all written statements with respect to the proposed rule change that are filed with the Commission, and all written communications relating to the proposed rule change between the Commission and any person, other than those that may be withheld from the public in accordance with the provisions of 5 U.S.C. 552, will be available for inspection and copying in the Commission's Public Reference Section, 450 Fifth Street, N.W., Washington, D.C. 20549. Copies of such filing will also be available for inspection and copying at the principal office of Delta. All submissions should refer to File No. SR–DCC–97–02 and should be submitted by June 3, 1997.

For the Commission by the Division of Market Regulation pursuant to delegated authority.

Margaret H. McFarland,

Deputy Secretary.

[FR Doc. 97–12423 Filed 5–12–97; 8:45 am]

BILLING CODE 8010–01–M

[4] 15 U.S.C. 78q–1(b)(3)(F).

SMALL BUSINESS ADMINISTRATION

Blue Ridge Investors Limited Partnership (License No. 04/74–0262); Notice of Filing of an Application for Approval of a Conflict of Interest Transaction

Notice is hereby given that Blue Ridge Investors Limited Partnership (Blue Ridge), P.O. Box 21962, Greensboro, North Carolina 27420 a Federal licensee under the Small Business Investment Act of 1958, as amended (the Act), has filed an application with the Small Business Administration (SBA) pursuant to Section 312 of the Act and covered by Section 107.730 of the SBA Rules and Regulations (the Regulations) governing the Small Business Investment Companies (13 CFR 107.730 (1996)) for approval of a conflict of interest transaction falling within the scope of the above Sections of the Act and the Regulations.

Subject to such approval, Blue Ridge proposes to provide funds to Geneva Associates, L.L.C., (Geneva), First Union Tower, 300 North Greene Street, Greensboro, North Carolina 27401, for the purchase of preferred stock in Varel Manufacturing Corporation (Varel) of Dallas, Texas. Blue Ridge had intended to co-invest with Geneva in Varel simultaneously, but could not pending the resolution of a foreign investment issue pertaining to Varel. The resolution was in favor of Blue Ridge but subsequent to the closing date of Geneva's financing to Varel.

The proposed financing is brought within the purview of Section 107.730(a)(1) of the Regulations because certain principals of Geneva are principals in Blue Ridge. Geneva is considered to be an Associate of Blue Ridge as defined by Section 107.50 of the Regulations.

Notice is further given that any person may, not later than 10 days from the date of the publication of the Notice, submit written comments on the proposed transaction to the Associate Administrator for Investment, Small Business Administration, 409 Third Street, S.W., Suite 6300, Washington, D.C. 20416.

A copy of this Notice shall be published, in accordance with Section 107.730(g) of the Regulations, in a newspaper of general circulation in Dallas, Texas.

(Catalog of Federal Domestic Assistance Program No.59.11, Small Business Investment Companies)

Dated: May 7, 1997.

Don A. Christensen,

Associate Administrator for Investment.

[FR Doc. 97–12483 Filed 5–12–97; 8:45 am]

BILLING CODE 8025–01–P

SMALL BUSINESS ADMINISTRATION

Declaration of Disaster #2933; Commonwealth of Kentucky; (Amendment #6)

In accordance with a notice from the Federal Emergency Management Agency, dated May 1, 1997, the above-numbered Declaration is hereby amended to extend the deadline for filing applications for loans for physical damage until June 2, 1997.

All other information remains the same, i.e., the termination date for filing applications for loans for economic injury is December 4, 1997.

(Catalog of Federal Domestic Assistance Program Nos. 59002 and 59008.)

Date: May 6, 1997.

Herbert Mitchell,

Acting Associate Administrator for Disaster Assistance.

[FR Doc. 97–12482 Filed 5–12–97; 8:45 am]

BILLING CODE 8025–01–P

SMALL BUSINESS ADMINISTRATION

Declaration of Disaster #2949 State of Minnesota; (Amendment #3)

In accordance with a notice from the Federal Emergency Management

Agency, dated May 1, 1997, the above-numbered Declaration is hereby amended to include the County of Lyon in the State of Minnesota as a disaster area due to damage caused by severe flooding, severe winter storms, snowmelt, high winds, rain, and ice beginning March 21, 1997 and continuing.

Any counties contiguous to the above-named primary county have already been covered.

All other information remains the same, i.e., the deadline for filing applications for physical damage is June 7, 1997 and for economic injury the termination date is January 8, 1998.

(Catalog of Federal Domestic Assistance Program Nos. 59002 and 59008.)

Date: May 6, 1997.

Herbert Mitchell,

Acting Associate Administrator for Disaster Assistance.

[FR Doc. 97–12481 Filed 5–12–97; 8:45 am]

BILLING CODE 8025–01–P

DEPARTMENT OF TRANSPORTATION

Office of the Secretary

Reports, Forms and Recordkeeping Requirements; Agency Information Collection Activity Under OMB Review

AGENCY: Office of the Secretary, DOT.

ACTION: Notice.

SUMMARY: In compliance with the Paperwork Reduction Act (44 U.S.C. 3501 *et seq.*), this notice announces that the Information Collection Request (ICR) abstracted below has been forwarded to the Office of Management and Budget (OMB) for extension of currently approved collections. The ICR describes the nature of the information collection and its expected burden. The **Federal Register** Notice with a 60-day comment period soliciting comments on the following collection of information was published on February 11, 1997 [62 FR 6300].

DATES: Comments must be submitted on or before June 12, 1997.

FOR MORE INFORMATION CONTACT: Sylvia Barney, (202) 366–6680 and refer to the OMB Control Number.

SUPPLEMENTARY INFORMATION:

Federal Transit Administration (FTA)

Title: Prevention of Prohibited Drug Use in Transit Operations.

Type of Request: Extension to a currently approved information collection.

OMB Control Number: 2132–0556.

Form(s): N/A.

Affected Public: Business or other for-profit, State, local government, and small business organizations.

Abstract: The Omnibus Transportation Employee Testing Act of 1991 (Pub. L. 102–143, October 28, 1991, now codified in relevant part 49 U.S.C. 5331) requires any recipient of Federal financial assistance under 49 U.S.C. Sections 5309, 5307 or 5311 or under 23 USC Section 103(e)(4) to establish a program designed to help prevent accidents and injuries resulting from safety-sensitive functions. FT's regulation, 49 CFR part 653, ''Prevention of Prohibited Drug Use in Transit Operations,'' effective March 17, 1994, requires recipients to submit to FTA annual reports containing data which summarize information concerning the recipients' drug testing program, such as the number and type of tests given, number of positive test results, and the kinds of safety-sensitive functions the employees perform. FTA uses these data to ensure compliance with the rule, to assess the misuse of drugs in the transit industry, and to set the random testing rate. The data will also be used to assess the effectiveness of the rule in reducing the misuse of drugs among safety-sensitive transit employees and making transit safer for the public.

Estimated Annual Burden: The annual estimated burden is 39,569 hours.

ADDRESSES: Send comments to the Office of Information and Regulatory Affairs, Office of Management and Budget, 725–17th Street, NW., Washington, DC 20503, Attention FTA Desk Officer.

Comments are Invited on: whether the proposed collection of information is necessary for the proper performance of the functions of the Department, including whether the information will have practical utility; the accuracy of the Department's estimate of the burden of the proposed information collection; ways to enhance the quality, utility and clarity of the information to be collected; and ways to minimize the burden of the collection of information on respondents, including the use of automated collection techniques or other forms of information technology.

Issued in Washington, DC, on May 7, 1997.

Phillip A. Leach,

Clearance Officer, United States, Department of Transportation.

[FR Doc. 97–12489 Filed 5–12–97; 8:45 am]

BILLING CODE 4910–62–P

DEPARTMENT OF TRANSPORTATION

Coast Guard

[CDG08–96–055]

Manning Requirements—Pilotage

AGENCY: Coast Guard, DOT.

ACTION: Revision of Previous Notice of Designated Areas.

SUMMARY: This notice revises the designated areas in the Eighth Coast Guard District for which new first class pilot licenses and endorsements will be issued by the Eighth Coast Guard District Regional Examination Centers. Notice of these designated areas was published in the **Federal Register** on December 26, 1996 (61 FR 68090).

FOR FURTHER INFORMATION CONTACT: CDR Guy A. Tetreau, Marine Safety Division, Eighth Coast Guard District, (504) 589–3624, between 8 a.m. and 4 p.m. Monday through Friday, except federal holidays.

SUPPLEMENTARY INFORMATION:

Introduction

A minor change in the description of Coast Guard Marine Safety Office Corpus Christi's designated areas for the issuance of new first class pilot's licenses and endorsements is necessary to clarify the geographic limits of the Brownsville Ship Channel designated area. It does not expand or reduce the designated area.

Eighth Coast Guard District Designated Areas

The following is a revision to the previously published designated areas. Future changes to designated areas will be published in the **Federal Register**.

MSO Corpus Christi

Revise

The Brownsville Ship Channel to Port Isabel. to read as follows:

The Brownsville Ship Channel from the Brazos Santiago Pass seabuoy to the Brownsville turning basin; including the Port Isabel Channel and turning basin.

Dated: April 24, 1997.

T. W. Josiah,

Rear Admiral, U.S. Coast Guard Commander, Eighth Coast Guard District.

[FR Doc. 97–12486 Filed 5–12–97; 8:45 am]

BILLING CODE 4910–14–M

DEPARTMENT OF TRANSPORTATION

Coast Guard

[CGD 97–024]

National Preparedness for Response Exercise Program (PREP)

AGENCY: Coast Guard, DOT.

ACTION: Notice to extend comment period for proposed changes to PREP Guidelines.

SUMMARY: The Coast Guard, the Environmental Protection Agency (EPA), the Research and Special Programs Administration (RSPA) and the Minerals Management Service (MMS), in concert with the states, the oil industry and concerned citizens, developed the Preparedness for Response Exercise Program (PREP). On March 26, 1997, the Coast Guard published a **Federal Register** notice (62 FR 14494) announcing a workshop with a request for comments. During the workshop, several participants requested an extension beyond April 30, 1997 for submitting comments. This notice extends the comment period for an extra 30 days.

DATES: Comments must be received on or before May 30, 1997.

ADDRESSES: Written comments should be submitted to COMMANDANT (G–MOR–2), Room 2100, U.S. Coast Guard Headquarters, 2100 Second Street, SW; Washington, DC 20593–0001. ATTN: Ms. Daren Sahatjian.

FOR FURTHER INFORMATION CONTACT:

For general information regarding the PREP program and the schedule, contact Ms. Karen Sahatjian, Marine Safety and Environmental Protection Directorate, Office of Response, (G–MOR–2), (202) 267–2850. The schedule and exercise design manual are available on the internet at http://www.dot.gov/dotinfo/uscg/hq/g-m/gmhome.htm or to obtain a hard copy of the design manual, contact Ms. Toni Hundley at the Office of Pipeline Safety at (202) 366–4397. The 1994 PREP Guidelines and Training Elements are available at no cost by writing or faxing the TASC Dept Warehouse, 3341 Q 75th Avenue, Landover, MD 20785, fax: 301–386–5394. The stock numbers of each manual are: PREP Guidelines-USCG–X0191; the Training Reference—USCG-X0188. Please indicate the quantity when ordering. Quantities are limited to 10 per order.

Dated: May 6, 1997.

R. C. North,

Rear Admiral, U.S. Coast Guard, Assistant Commandant for Marine Safety and Environmental Protection.

[FR Doc. 97–12487 Filed 5–12–97; 8:45 am]

BILLING CODE 4910–14–M

DEPARTMENT OF TRANSPORTATION

Federal Aviation Administration

[Summary Notice No. PE–97–27]

Petitions for Exemption Summary of Petitions Received; Dispositions of Petitions Issued

AGENCY: Federal Aviation Administration (FAA), DOT.

ACTION: Notice of petitions for exemption received and of dispositions of prior petitions.

SUMMARY: Pursuant to FAA's rulemaking provisions governing the application, processing, and disposition of petitions for exemption (14 CFR part 11), this notice contains a summary of certain petitions seeking relief from specified requirements of the Federal Aviation Regulations (14 CFR Chapter I), dispositions of certain petitions previously received, and corrections. The purpose of this notice is to improve the public's awareness of, and participation in, this aspect of FAA's regulatory activities. Neither publication of this notice nor the inclusion or omission of information in the summary is intended to affect the legal status of any petition or its final disposition.

DATES: Comments on petitions received must identify the petition docket number involved and must be reeieved on or before June 2, 1997.

ADDRESSES: Send comments on any petition in triplicate to: Federal Aviation Administration, Office of the Chief Counsel, Attn: Rule Docket (AGC–200), Petition Docket No. 28889, 800 Independence Avenue, SW., Washington, DC 20591.

Comments may also be sent electronically to the following internet address: 9-NPRM-CMNTS@faa.dot.gov.

The petition, any comments received, and a copy of any final disposition are filed in the assigned regulatory docket and are available for examination in the Rules Docket (AGC–200), Room 915G, FAA Headquarters Building (FOB 10A), 800 Independence Avenue, SW., Washington, DC 20591; telephone (202) 267–3132.

FOR FURTHER INFORMATION CONTACT: Heather Thorson (202) 267–7470 or Angela Anderson (202) 267–9681 Office of Rulemaking (ARM–1), Federal Aviation Administration, 800 Independence Avenue, SW., Washington, DC 20591.

This notice is published pursuant to paragraphs (c), (e), and (g) of § 11.27 of Part 11 of the Federal Aviation Regulations (14 CFR part 11).

Issued in Washington, D.C., on May 6, 1997.

Donald P. Byrne,

Assistant Chief Counsel for Regulations.

Petitions for Exemption

Docket No.: 28889
Petitioner: The Nordam Group
Sections of the FAR Affected:
14 CFR 21.303(g)
Description of Relief Sought: To permit the petitioner to produce aircraft nose radomes under its Parts Manufacturing Approval when the final assembly and finishing of the radome, in certain situations, is accomplished by British Aerospace Systems and Equipment, a repair station located outside the United States.

[FR Doc. 97–12448 Filed 5–12–97; 8:45 am]

BILLING CODE 4910–13–M

DEPARTMENT OF TRANSPORTATION

Federal Highway Administration

Environmental Impact Statement; Crow Wing County, MN

AGENCY: Federal Highway Administration (FHWA), DOT.

ACTION: Notice of Intent.

SUMMARY: The FHWA is issuing this notice to advise the public that a Tier II Environmental Impact Statement (EIS) will be prepared for a proposed highway project to relocate Trunk Highway 371 (TH 371) in Crow Wing County, Minnesota. The Tier II EIS examines the preferred location alternative in greater detail and addresses specific social, economic and environmental concerns; develops specific mitigation; and considers final design issues.

FOR FURTHER INFORMATION CONTACT: Cheryl Martin, Environmental Engineer, Federal Highway Administration, Galtier Plaza, Box 75, 175 Fifth Street East, Suite 500, St. Paul, Minnesota 55101–2901, Telephone (612) 291–6120; or Curt Eastlund, Project Manager, Minnesota Department of Transportation—District 3, 1991 Industrial Park Road, Baxter, Minnesota 56401, Telephone (218) 828–2482.

SUPPLEMENTARY INFORMATION: The FHWA, in cooperation with the Minnesota Department of Transportation, will prepare a Tier II EIS on a proposal to relocate TH 371 in Crow King County, Minnesota. The

proposed improvement would involve the construction of approximately 10.5 kilometers (km) of roadway (7.9 km on new alignment and 2.6 km on existing TH 371) from 0.8 km north of the entrance to Crow Wing State Park to the existing intersection of TH 371 and TH 210 in Baxter, Minnesota. Improvements to the corridor are considered necessary to provide for the existing and projected traffic demand. Also included in this proposal is a new crossing over the Mississippi River. The Tier I EIS has been completed, resulting in a preferred location. The Tier I EIS was published, reviewed, comments were addressed, and a Record of Decision issued.

The Tier II EIS will include work accomplished for the Tier I EIS by reference and expand into several special studies, specific mitigation and detail design issues. The Tier II EIS will examine design alternatives for the South Extension, the junction of County State Aid Highway 48 and the bridge over the Mississippi River.

Coordination has been initiated and will continue with appropriate Federal, State and local agencies and private organizations and citizens who have previously expressed or are known to have an interest in the proposed action.

Public meetings have been held in the past and will continue to be held, with public notice given for the time and place of the meetings. To ensure that the full range of issues related to this proposed action are addressed and all significant issues identified, comments and suggestions are invited from all interested parties. Comments or questions concerning this proposed action and the EIS should be directed to the FHWA at the address provided above.

(Catalog of Federal Domestic Assistance Program Number 20.205, Highway Planning and Construction. The regulations implementing Executive Order 12372 regarding intergovernmental consultation on Federal programs and activities apply to this program)

Issued on: May 5, 1997.

Stanley M. Graczyk,

Project Development Engineer, Federal Highway Administration.

[FR Doc. 97–12458 Filed 5–12–97; 8:45 am]

BILLING CODE 4910–22–M

DEPARTMENT OF TRANSPORTATION

Federal Railroad Administration

[FRA Docket No. H–97–1]

Petition for Waiver of Compliance

In accordance with Part 211 of Title 49 Code of Federal Regulations (CFR), notice is hereby given that the Federal Railroad Administration (FRA) received from the National Railroad Passenger Corporation (Amtrak) a request for waiver of compliance with certain requirements of 49 CFR part 213: Track Safety Standards.

The purpose of Amtrak's petition is to secure approval from FRA to operate a test train at speeds up to 135 mph between County (MP 34) and MP 54, 1.7 miles east of Ham (MP 55.7) on the Metropolitan Division of Amtrak's Northeast Corridor in the spring of 1997. Amtrak currently operates trains at 125 mph under waiver in this track segment. To conduct this testing, Amtrak seeks relief from the requirements of 49 CFR Section 213.9, which limits maximum permissible train speeds to 110 mph. The schedule for the testing has not been finalized, but will be limited to a few days depending upon weather conditions.

In preparation for operating the new high-speed trainsets between New York City, New York, and Washington, D.C., Amtrak needs to evaluate the high-speed dynamic forces on pantograph assemblies in a configuration similar to the new trainsets. In order to perform this evaluation, Amtrak requests to operate a test train consisting of two AEM–7 electric locomotives and six Amfleet cars, including Amtrak's Track Geometry Car.

Interested parties are invited to participate in these proceedings by submitting written views, data, or comments. FRA does not anticipate scheduling a public hearing in connection with these proceedings since the facts do not appear to warrant a hearing. If any interested party desires an opportunity for oral comment, they should notify FRA, in writing, before the end of the comment period and specify the basis for their request.

All communications concerning these proceedings should identify the appropriate docket number (e.g., Waiver Petition Docket Number H–97–1) and must be submitted in triplicate to the Docket Clerk, Office of Chief Counsel, FRA, Nassif Building, 400 Seventh Street, S.W., Washington, D.C. 20590. Communications received within 45 days of the date of this notice will be considered by FRA before final action is taken. Comments received after that date will be considered as far as practicable. All written communications concerning these proceedings are available for examination during regular business hours (9:00 a.m.–5:00 p.m.) at FRA's temporary docket room located at 1120 Vermont Avenue, N.W., Room 7051, Washington, D.C. 20005.

Issued in Washington, D.C. on May 7, 1997.

Grady C. Cothen, Jr.,

Deputy Associate Administrator for Safety Standards and Program Development.

[FR Doc. 97–12416 Filed 5–12–97; 8:45 am]

BILLING CODE 4910–06–P

DEPARTMENT OF TRANSPORTATION

Federal Railroad Administration

[FRA Docket No. H–97–3]

Petition for Waiver of Compliance

In accordance with Part 211 of Title 49 Code of Federal Regulations (CFR), notice is hereby given that the Federal Railroad Administration (FRA) received from the National Railroad Passenger Corporation (Amtrak) a request for waiver of compliance with certain requirements of 49 CFR part 213: Track Safety Standards.

The purpose of Amtrak's petition is to secure approval from FRA to operate its Talgo trains at higher cant deficiencies in the Pacific Northwest. Amtrak, Burlington Northern Santa Fe Railway (BNSF), and the Washington State Department or Transportation (WSDOT) have joined together on a program to reduce trip times of Talgo trains between Seattle, Washington, and Portland, Oregon, and between Seattle, Washington, and Vancouver, British Columbia. Talgo trains with tilting passenger cars provide increased comfort at higher cant deficiencies. These trains have been in use since 1979 on the Spanish National Railway at seven inches of cant deficiency. The trains have also been tested under previous waivers granted by FRA, including testing at 5.5 inches of cant deficiency in 1994 on the former Southern Pacific route north of St. Louis, Missouri, and in 1988 at up to 8 inches of cant deficiency conducted for the Coalition of Northeastern Governors.

Title 49 CFR Section 213.57(b) prescribes a speed limit not distinguishing between freight and passenger rolling stock at which trains may operate over curved track as a function of curve radius (curvature) and installed superelevation.

In general, for any combination of curvature and superelevation, there is a specific (''balanced'') speed at which the effect of centrifugal force is canceled. The track standards permit the operation of trains on curves at speeds producing a conservative underbalance (''cant deficiency'') in line with historic industry practice. The track safety standards also permit a maximum of three inches of cant deficiency;

however, FRA has granted waivers for qualified passenger equipment at higher cant deficiencies. A more detailed discussion of cant deficiency can be found in 52 FR 38035, October 13, 1987.

Amtrak, BNSF, and WSDOT have worked together to accomplish the goal of reducing trip times. Amtrak plans to dedicate a second locomotive, either a P40 or P42 high-performance locomotive, to each Talgo train. BNSF, the track owner, has initiated a program working with the municipalities to reduce the number of speed restrictions. BNSF also lifted speed restrictions imposed decades ago and not lifted after track improvements were made. Another part of the program is to increase curve speeds from those developing three inches of cant deficiency on as many as 376 curves on the route.

Interested parties are invited to participate in these proceedings by submitting written views, data, or comments. FRA does not anticipate scheduling a public hearing in connection with these proceedings since the facts do not appear to warrant a hearing. If any interested party desires an opportunity for oral comment, they should notify FRA, in writing, before the end of the comment period and specify the basis for their request.

All communications concerning these proceedings should identify the appropriate docket number (e.g., Waiver Petition Docket Number H–97–3) and must be submitted in triplicate to the Docket Clerk, Office of Chief Counsel, FRA, Nassif Building, 400 Seventh Street, S.W., Washington, D.C. 20590. Communications received within 30 days of the date of this notice will be considered by FRA before final action is taken. Comments received after that date will be considered as far as practicable. All written communications concerning these proceedings are available for examination during regular business hours (9:00 a.m.–5:00 p.m.) at FRA's temporary docket room located at 1120 Vermont Avenue, N.W., Room 7051, Washington, D.C. 20005.

Issued in Washington, D.C. on May 7, 1997.

Grady C. Cothen, Jr.,

Deputy Associate Administrator, for Safety Standards and Program Development.

[FR Doc. 97–12417 Filed 5–12–97; 8:45 am]

BILLING CODE 4910–06–M

DEPARTMENT OF TRANSPORTATION

Maritime Administration

[Docket No. M–034]

Information Collection Available for Public Comments and Recommendations

ACTION: Notice and request for comments.

SUMMARY: In accordance with the Paperwork Reduction Act of 1995, this notice announces the Maritime Administration's (MARAD's) intentions to request extension of approval for three years of a currently approved information collection.

DATES: Comments should be submitted on or before July 14, 1997.

FOR FURTHER INFORMATION CONTACT: Edmond J. Fitzgerald, Director, Office of Subsidy and Insurance, MAR–570, Room 8117, 400 Seventh Street, S.W., Washington, DC 20590. Telephone 202–366–2400 or fax 202–366–7901. Copies of this collection can also be obtained from that office.

SUPPLEMENTARY INFORMATION:

Title of Collection: Approval of Underwriters for Marine Hull Insurance.

Type of Request: Extension of currently approved information collection.

OMB Control Number: 2133–0517.

Form Number: None.

Expiration Date of Approval: June 30, 1997.

Summary of Collection of Information: Concerns approval of marine hull underwriters to insure MARAD program vessels. Foreign applicants will be required to submit financial data upon which MARAD approval would be based. In certain cases, brokers would be required to certify that American underwriters were offered opportunity to compete for the business.

Need and Use of the Information: 46 CFR Part 249, published as a final rule on June 20, 1988, prescribes regulations for approval of underwriters for marine hull insurance on vessels built or operated with subsidy or covered by vessel obligation guarantees issued pursuant to Title XI of the Merchant Marine Act, 1936, as amended. The regulations provide for approval of foreign underwriters on the basis of an assessment of their financial condition, the regulatory regime under which they operate, and a statement attesting to a lack of discrimination in their country against U.S. hull insurers. The regulations also require that American underwriters be given an opportunity to compete for every placement, thereby necessitating in some cases certification that such opportunity was offered.

Description of Respondents: Foreign underwriters of marine insurance and insurance brokers placing marine hull insurance if less than 50 percent of the placement is made in the American market.

Annual Responses: 82.

Annual Burden: 66 hours.

Comments: Send all comments regarding this information collection to Joel C. Richard, Department of Transportation, Maritime Administration, MAR–120, Room 7210, 400 Seventh Street, S.W., Washington, DC 20590. Send comments regarding whether this information collection is necessary for proper performance of the function of the agency and will have practical utility, accuracy of the burden estimates, ways to minimize this burden, and ways to enhance quality, utility, and clarity of the information to be collected.

By Order of the Maritime Administrator.

Dated: May 7, 1997.

Joel C. Richard,

Secretary.

[FR Doc. 97–12431 Filed 5–12–97; 8:45 am]

BILLING CODE 4910–81–P

DEPARTMENT OF TRANSPORTATION

National Highway Traffic Safety Administration

[Docket No. 96–114; Notice 2]

Final Decision That Certain Nonconforming Vehicles are Eligible for Importation

AGENCY: National Highway Traffic Safety Administration, DOT.

ACTION: Final decision that certain nonconforming vehicles are eligible for importation.

SUMMARY: This document announces a final decision by the Administrator of the National Highway Traffic Safety Administration (NHTSA) that certain vehicles that do not comply with all applicable Federal motor vehicle safety standards, but that are certified by their original manufacturer as complying with all applicable Canadian motor vehicle safety standards, are eligible for importation into the United States. The vehicles in question either (1) Are substantially similar to vehicles that were certified by their manufacturers as complying with the U.S. safety standards and are capable of being readily altered to conform to those standards, or (2) have safety features

that comply with, or are capable of being altered to comply with all U.S. safety standards. This document also announces NHTSA's decision to rescind the vehicle eligibility number that was formerly applicable to all vehicles certified by their original manufacturer as complying with Canadian safety standards (eligibility number VSA–1), and to assign four separate eligibility numbers to Canadian certified vehicles, based on those vehicles' classification and weight.

DATES: This decision is effective on May 13, 1997.

FOR FURTHER INFORMATION CONTACT: George Entwistle, Office of Vehicle Safety Compliance, NHTSA (202–366–5306).

SUPPLEMENTARY INFORMATION:

Background

Under 49 U.S.C. § 30141(a)(1)(A), a motor vehicle that was not originally manufactured to conform to all applicable Federal motor vehicle safety standards (FMVSS) shall be refused admission into the United States unless NHTSA has decided that the vehicle is substantially similar to a motor vehicle of the same model and model year that was originally manufactured for import into and sale in the United States and was certified as complying with all applicable FMVSS, and also finds that the noncompliant vehicle is capable of being readily altered to comply with all applicable FMVSS. Where there is no substantially similar U.S.-certified motor vehicle, 49 U.S.C. § 30141(a)(1)(B) permits a nonconforming motor vehicle to be admitted into the United States if NHTSA decides that its safety features comply with, or are capable of being altered to comply with, all applicable FMVSS.

On March 7, 1997, NHTSA published a notice in the **Federal Register** at 62 FR 10614 announcing that it had made a tentative decision that certain motor vehicles that do not comply with all applicable FMVSS, but that are certified by their original manufacturer as complying with all applicable Canadian Motor Vehicle Safety Standards, are eligible for importation into the United States. The notice identified these vehicles as:

(a) All passenger cars manufactured on or after September 1, 1996 and before September 1, 2002, that, as originally manufactured, are equipped with an automatic restraint system that complies with Federal Motor Vehicle Safety Standard (FMVSS) No. 208, and that comply with FMVSS No. 214;

(b) All multipurpose passenger vehicles, trucks and buses manufactured on or after September 1, 1993, and before September 1, 1998, that, as originally manufactured, comply with FMVSS Nos. 202, 208, and 216; and

(c) All multipurpose passenger vehicles, trucks and buses manufactured on or after September 1, 1998, and before September 1, 2002, that, as originally manufactured, comply with FMVSS Nos. 202, 208, 214, and 216.

The reader is referred to the March 7 notice for a full discussion of the factors leading to the tentative decision.

The notice also proposed to rescind Vehicle Eligibility Number VSA–1, which NHTSA had established as the designator for importers to use on the HS–7 Declaration Form accompanying entry to indicate the import eligibility of all vehicles certified by their original manufacturer as complying with all applicable Canadian motor vehicle safety standards (CMVSS). In place of this designator, the notice proposed to assign four separate eligibility numbers (VSA–80 through VSA–83) to Canadian-certified vehicles, based on vehicle classification (i.e., passenger car, multipurpose passenger vehicle, truck, bus, trailer, motorcycle) and, in the case of multipurpose passenger vehicles, buses and trucks, based also on vehicle weight. The reader is also referred to the March 7 notice for a full discussion of this proposal.

In accordance with 49 U.S.C. § 30141(b), the notice solicited public comments on the tentative decision that NHTSA had made and on the agency's proposal to assign new import eligibility numbers to Canadian-certified vehicles. Four comments were submitted in response to the notice. The first of these was submitted by members of the North American Automotive Trade Association (NAATA). In their comment, the NAATA members requested NHTSA to be as expedient as possible in making a final decision regarding the import eligibility of Canadian-certified passenger cars manufactured on or after September 1, 1996 that comply with FMVSS Nos. 208 and 214. The NAATA members also requested the agency to preserve for Canadian market vehicles a waiver from the fee established at 49 CFR 594.8 for importing a vehicle pursuant to an eligibility decision by the NHTSA Administrator. In support of this request, the NAATA members contended that NHTSA incurs no additional administrative overhead or burden in processing these vehicles, in comparison to the agency's processing of Canadian market vehicles that have previously been determined eligible for importation. Additionally, the NAATA members characterized the proposed change in eligibility numbers for Canadian-certified vehicles as being merely clerical in nature, and not resulting in any actual change to ''the entry or compliance package approval process.''

The second comment was submitted by Philip Trupiano of Auto Enterprises, Inc. of Clawson, Michigan, a Registered Importer of nonconforming vehicles. In his comment, Mr. Trupiano also requested the agency to expedite its eligibility decision with respect to Canadian-certified passenger cars manufactured on or after September 1, 1996. Mr. Trupiano further expressed the opinion that NHTSA should not establish September 1, 2002, or any other date for the expiration of import eligibility on Canadian market vehicles. Mr. Trupiano observed that the notice reflected the agency's intent ''to issue new decisions covering vehicles manufactured on or after September 1, 2002 within a sufficient period before that date is reached.'' In Mr. Trupiano's opinion, NHTSA's ability to honor this intent is undermined by the fact that it has taken the agency more than seven months from September 1, 1996 to issue a final decision of import eligibility with respect to Canadian-certified passenger cars manufactured on or after that date.

Mr. Trupiano noted that NHTSA proposed September 1, 2002 as the next cutoff because that is the date on which revised interior impact protection requirements that are to be phased in under FMVSS No. 201, Occupant Protection in Interior, and that are not found in the corresponding CMVSS, will become effective for all passenger cars and for multi-purpose passenger vehicles, trucks, and buses with a gross vehicle weight rating of 10,000 pounds or less. To eliminate the need for NHTSA to issue a new eligibility decision following the proposed September 1, 2002 cutoff, Mr. Trupiano suggested that the agency could make compliance with FMVSS No. 201 a condition for the import eligibility of all affected vehicles manufactured on or after September 1, 1996.

Although Mr. Trupiano stated that he has no objection to the proposed assignment of new eligibility numbers to Canadian-certified vehicles, he expressed the opinion that such a change is unnecessary in view of the fact that Registered Importers provide information on vehicle classification in the certificates of conformity that they submit to NHTSA to obtain the release of bonds posted for noncomplying vehicle.

Additionally, Mr. Trupiano requested the agency to clarify in writing that

vehicles entered under the proposed eligibility numbers would be exempt from the fee prescribed under 49 CFR 594.8. Mr. Trupiano contended, without providing any supporting analysis, that the imposition of such a fee on Canadian-certified vehicles would be in violation of the North American Free Trade Agreement (NAFTA). Mr. Trupiano further expressed the understanding that Canadian-certified vehicles are not subject to the fee prescribed under 49 CFR 594.8 because of an agreement between NHTSA and the Canadian government reflected in a letter dated March 16, 1990 from Canadian Ambassador D.H. Burney to Jerry R. Curry, who was then NHTSA Administrator, and a response from Administrator Curry to Ambassador Burney dated April 24, 1990. Copies of these letters, which were attached to Mr. Trupiano's comments, have been placed in the public docket for this eligibility decision. Mr. Trupiano interprets this correspondence as containing an agreement on NHTSA's behalf to waive importation fees on Canadian market vehicles which ''cannot be unilaterally changed.''

The third comment was submitted by Brian Osler, Executive Director and Counsel to NAATA. In his comment, Mr. Osler expressed agreement with the agency's tentative decision to extend import eligibility to Canadian market vehicles manufactured on or after September 1, 1996 that are in compliance with FMVSS Nos. 208 and 214. Mr. Osler took exception, however, to the proposed eligibility cutoff date of September 1, 2002, contending, as did Mr. Trupiano, that this will result in future delays that will cause economic hardship. Mr. Osler predicted that NHTSA's ''administrative requirements'' will prevent the agency from honoring its commitment to issue a new eligibility decision within a reasonable period before the September 1, 2002 cutoff date is reached. To eliminate the need for a future decision, Mr. Osler recommended that the tentative decision be revised along the lines suggested by Mr. Trupiano. Mr. Osler also shared Mr. Trupiano's opinion that NHTSA has an obligation to adopt this approach under Article 908 of NAFTA, which he characterized as requiring the agency to conduct FMVSS conformity assessments as expeditiously as possible. Mr. Osler additionally urged NHTSA to state in writing that vehicles imported under the proposed eligibility numbers are exempt from the fees prescribed under 49 CFR 594.8, and contended that this is ''necessary to ensure that NHTSA does not unduly restrict trade as contemplated by the Free Trade Agreement.'' Mr. Osler also characterized the correspondence between Administrator Curry and Ambassador Burney as reflecting the agency's agreement not to ''impose fees that would unduly restrict trade between Canada and the United States.''

The fourth comment was submitted by Lawrence A. Beyer, an attorney who represents several Registered Importers. In his comment, Mr. Beyer also expressed general agreement with the tentative decision, but voiced concern that the assignment of new eligibility numbers for Canadian-certified vehicles could be a ploy for eliminating the fee waiver that has applied to these vehicles when imported under eligibility number VSA–1. Mr. Beyer contended that if the agency is so motivated, its actions would contradict a requirement in 49 CFR Part 594 for fees to be set at the beginning of the fiscal year. Mr. Beyer further suggested that if NHTSA intends to change the fee structure for Canadian imports, the agency should publish a separate notice in the **Federal Register** concerning the matter, so that those who stand to be impacted will have a fair opportunity to comment.

NHTSA has considered each of the issues that these comments have raised. The agency has taken note of the concerns the commenters have expressed regarding the timing of this final decision. That timing was influenced, in part, by information that NHTSA obtained from Registered Importers indicating that Model Year 1997 vehicles would begin to be retired from Canadian rental fleets in March and April of this year, reducing the need for an earlier decision regarding the import eligibility of those vehicles. Contrary to the assumptions expressed by certain of the commenters, the timing of this decision has no bearing on any future such actions that NHTSA may take. As stated in the notice of tentative decision, the agency intends to issue new eligibility decisions covering vehicles for which the September 1, 2002 cutoff date was proposed within a sufficient period before that date is reached. The alternative suggested by certain of the commenters of specifying compliance with FMVSS No. 201 as a condition for the import eligibility of vehicles manufactured on or after September 1, 1996 is less acceptable to the agency. Should Canada adopt the revised interior impact protection requirements that are to be phased in under FMVSS No. 201 by September 1, 2002, there will be no need for compliance with this standard to be made a specific condition for import eligibility. Since those requirements have yet to be phased in, FMVSS No. 201 is at present substantially similar to its Canadian counterpart, precluding the need for compliance with the standard to be made a specific condition for the import eligibility of vehicles manufactured on or after September 1, 1996.

Contrary to the assumption expressed by one of the commenters, NHTSA did not propose to assign new vehicle eligibility numbers to Canadian-certified vehicles as a means to circumvent any purported fee exemption for those vehicles. As stated in the notice of tentative determination, the agency instead proposed separate eligibility numbers based on vehicle classification, and, in the case of multipurpose passenger vehicles, trucks, and buses, by weight, so that the eligibility decisions that pertain to Canadian-certified vehicles can be more readily modified in the event that any future discrepancies arise between Canadian and U.S. standards that affect only certain classes of vehicles. The use of a single eligibility number to cover all vehicle classes made it difficult to keep track of past modifications to these eligibility decisions. Contrary to the opinion of one commenter, the need for separate eligibility numbers is not undermined by the existence of vehicle classification information in the certificates of conformity that Registered Importers submit to NHTSA. The agency is not proposing separate eligibility numbers so that it can monitor the volume of Canadian imports by vehicle class, but instead to facilitate any future modifications to the eligibility determinations that may become necessary.

As the commenters recognized, the notice of tentative decision was entirely silent with respect to the issue of fees for Canadian imports. NHTSA did not introduce the subject because its intent was to have an eligibility decision in place as soon as possible to cover vehicles manufactured on or after September 1, 1996, without the delays that a controversy over fees could engender. In point of fact, there is no existing ''waiver'' of fees for Canadian vehicles. The importers of these vehicles must pay the fee for reimbursement of the U.S. Customs Service's bond processing costs established under 49 CFR 594.9.

The fee for importing a vehicle pursuant to a determination by the Administrator found at 49 CFR 594.8 is imposed, as that section states, to cover the direct and indirect costs incurred by NHTSA in making the eligibility determination. This fee is now set at

$134, and, as stated at 49 CFR 594.8(a), is payable by each importer of a vehicle covered by an import eligibility determination made under 49 CFR Part 593.

At the time that it was first established, the fee for importing a motor vehicle pursuant to an eligibility determination on the Administrator's initiative based on the existence of a substantially similar U.S.-certified vehicle was $1,560, to be paid only by the importer of the first vehicle covered by the determination. See 54 FR 40100, 40108 (September 29, 1989). Consistent with this provision, in the notice announcing its first final determination of import eligibility for Canadian-certified vehicles, published on August 13, 1990 at 55 FR 32988, NHTSA stated that the $1,560 fee then required under 49 CFR 593.8 would ''be payable only once, and by the first importer of any Canadian vehicle covered by this determination.'' 55 FR 32990.

In his correspondence with the Canadian Ambassador that is cited by several of the commenters, former NHTSA Administrator Curry stated that ''the fee of $1,560 would cover the blanket determination of all passenger cars, and would not be applied to each individual make and model year of passenger car,'' thereby ''effectively moot[ing] Canada's . . . request that Canadian market passenger cars be exempted from the determination fee.'' It is worth noting that this letter neither stated nor otherwise acknowledged the existence of any exemption from importation fees for Canadian vehicles. The letter in fact stated that the Ambassador's request for such an exemption could not be granted in that the fees established by the agency were specifically required by the Imported Vehicle Safety Compliance Act of 1988, Pub. L. 100–562.

Although NHTSA has continued to collect the other fees established under 49 CFR Part 594 from the importers of Canadian-certified vehicles, the agency has not been collecting the fee prescribed under section 594.8 from those importers because that fee has already been paid by the first person to import a Canadian-certified vehicle under an eligibility decision made by the agency. That payment in theory reimbursed NHTSA for its costs in making the import eligibility decision. As a consequence, NHTSA has stated at various junctures that the fee for importing a vehicle pursuant to an Administrator's determination would not apply to Canadian vehicles covered by eligibility number VSA–1. See, e.g., 58 FR 41681, 41682 (August 5, 1993) and 61 FR 51043, 51044 (September 30, 1996).

Even though NHTSA is now rescinding eligibility number VSA–1, and replacing it with four separate eligibility numbers based on vehicle classification and weight, the agency does not intend to collect the importation fee established under 49 CFR 594.8 from the importers of vehicles covered by those eligibility numbers. First, the agency recognizes that the assignment of new eligibility numbers for Canadian-certified vehicles does not constitute a new import eligibility determination with respect to those vehicles that would justify imposition of the fee required under 49 CFR 594.8. However, even if payment of that fee could be justified, given the volume of nonconforming Canadian imports (which exceeded 15,000 vehicles in calendar year 1995 alone), the only fee that could be assessed on a ''per-vehicle'' basis to reimburse the agency for its costs in making eligibility decisions regarding those vehicles would be too minuscule to justify its imposition.

NHTSA is currently considering, however, proposing fees pursuant to 49 U.S.C. § 30141(a)(3) to reimburse the agency's costs associated with making decisions as to whether particular vehicles may be released by registered importers, i.e, the costs for the review and processing of certificates of conformity submitted by registered importers to document that vehicles that were not originally manufactured to conform to all applicable FMVSS have been brought into conformity with those standards. Such fees would apply to all vehicles for which conformity certificates are submitted to NHTSA, including vehicles imported from Canada.

Final Decision

Accordingly, the Administrator of NHTSA hereby decides that:

(a) All passenger cars manufactured on or after September 1, 1996 and before September 1, 2002, that, as originally manufactured, are equipped with an automatic restraint system that complies with Federal Motor Vehicle Safety Standard (FMVSS) No. 208, and that comply with FMVSS No. 214;

(b) All multipurpose passenger vehicles, trucks and buses manufactured on or after September 1, 1993, and before September 1, 1998, that, as originally manufactured, comply with FMVSS Nos. 202, 208, and 216; and

(c) All multipurpose passenger vehicles, trucks and buses manufactured on or after September 1, 1998, and before September 1, 2002, that, as originally manufactured, comply with FMVSS Nos. 202, 208, 214, and 216;

that are certified by their original manufacturer as complying with all applicable Canadian motor vehicle safety standards, are eligible for importation into the United States on the basis that either:

1. they are substantially similar to vehicles of the same make, model, and model year originally manufactured for importation into and sale in the United States, or originally manufactured in the United States for sale there, and certified as complying with all applicable FMVSS, and are capable of being readily altered to conform to all applicable FMVSS; or

2. They have safety features that comply with, or are capable of being altered to comply with, all applicable FMVSS.

Vehicle Eligibility Number

The importer of a vehicle admissible under any final decision must indicate on the Form HS–7 accompanying entry the appropriate vehicle eligibility number indicating that the vehicle is eligible for entry. Vehicle Eligibility Number VSA–1 has previously covered all eligible vehicles certified by their original manufacturer as complying with all applicable CMVSS. NHTSA hereby rescinds that eligibility number and assigns the following eligibility numbers to the vehicles it covered, and to those admissible under this notice of final decision:

Vehicles Certified by Their Original Manufacturer as Complying with all Applicable Canadian Motor Vehicle Safety Standards

Number	Vehicles
VSA–80 ..	(a) All passenger cars less than 25 years old that were manufactured before September 1, 1989; (b) All passenger cars manufactured on or after September 1, 1989, and before September 1, 1996, that, as originally manufactured, are equipped with an automatic restraint system that complies with Federal Motor Vehicle Safety Standard (FMVSS) No. 208;

Number	Vehicles
	(c) All passenger cars manufactured on or after September 1, 1996 and before September 1, 2002, that, as originally manufactured, are equipped with an automatic restraint system that complies with FMVSS Nos. 208, and that comply with FMVSS No. 214.
VSA–81 ..	(a) All multipurpose passenger vehicles, trucks, and buses with a GVWR of 4536 kg. (10,000 lbs.) or less that are less than 25 years old and that were manufactured before September 1, 1991; (b) All multipurpose passenger vehicles, trucks, and buses with a GVWR of 4536 kg. (10,000 lbs.) or less that were manufactured on and after September 1, 1991, and before September 1, 1993, and that, as originally manufactured, comply with FMVSS Nos. 202 and 208; (c) All multipurpose passenger vehicles, trucks and buses with a GVWR of 4536 kg. (10,000 lbs.) or less that were manufactured on or after September 1, 1993, and before September 1, 1998, and that, as originally manufactured, comply with FMVSS Nos. 202, 208, and 216; (d) All multipurpose passenger vehicles, trucks and buses with a GVWR of 4536 kg. (10,000 lbs.) or less, that were manufactured on or after September 1, 1998, and before September 1, 2002, and that, as originally manufactured, comply with the requirements of FMVSS Nos. 202, 208, 214, and 216.
VSA–82 ..	All multipurpose passenger vehicles, trucks and buses with a GVWR greater than 4536 kg. (10,000 lbs.) that are less than 25 years old.
VSA–83 ..	All trailers, and all motorcycles that are less than 25 years old.

Authority: 49 U.S.C. 30141 (a)(1)(A) and (b)(1); 49 CFR 593.8; delegation of authority at 49 CFR 1.50.

Issued on: May 7, 1997.

Ricardo Martinez,

Administrator.

[FR Doc. 97–12488 Filed 5–12–97; 8:45 am]

BILLING CODE 4910–59–P

DEPARTMENT OF TRANSPORTATION

Surface Transportation Board

[STB Finance Docket No. 33388]

CSX Corporation and CSX Transportation, Inc., Norfolk Southern Corporation and Norfolk Southern Railway Company—Control and Operating Leases/Agreements—Conrail Inc. and Consolidated Rail Corporation

AGENCY: Surface Transportation Board, DOT.

ACTION: Decision No. 5; Notice of petitions filed by applicants seeking waiver of otherwise applicable requirements respecting seven construction projects; Request for comments.

SUMMARY: CSX Corporation (CSXC), CSX Transportation, Inc. (CSXT), Norfolk Southern Corporation (NSC), Norfolk Southern Railway Company (NSR), Conrail Inc. (CRI), and Consolidated Rail Corporation (CRC)[1] intend to file, on or before July 10, 1997, a ''primary application'' seeking Surface Transportation Board (Board) authorization for, among other things, (a) the acquisition by CSX and NS of control of Conrail, and (b) the division of the assets of Conrail by and between CSX and NS. *See* Decision No. 2, served April 21, 1997, and published that day in the **Federal Register** at 62 FR 19390. Applicants have now filed petitions seeking waiver of certain otherwise applicable requirements respecting seven related construction projects. These waivers, if granted, would allow applicants to begin construction on these projects following the completion by the Board of its environmental review of the constructions, and the issuance of a further decision approving construction, but prior to approval by the Board of the primary application. The Board seeks comments from interested persons respecting the waivers sought by applicants.

DATES: Written comments must be filed with the Board no later than June 2, 1997. Replies may be filed by applicants no later than June 4, 1997.

ADDRESSES: An original and 25 copies of all documents must refer to STB Finance Docket No. 33388 and must be sent to the Office of the Secretary, Case Control Unit, ATTN: STB Finance Docket No. 33388, Surface Transportation Board, 1925 K Street, N.W., Washington, DC 20423–0001.[2] In addition, one copy of all documents in this proceeding must be sent to Administrative Law Judge Jacob Leventhal, Federal Energy Regulatory Commission, 888 First Street, N.E., Suite 11F, Washington, DC 20426 [(202) 219–2538; FAX: (202) 219–3289] and to each of applicants' representatives: (1) Dennis G. Lyons, Esq., Arnold & Porter, 555 12th Street, N.W., Washington, DC 20004–1202; (2) Richard A. Allen, Esq., Zuckert, Scoutt & Rasenberger, L.L.P., Suite 600, 888 Seventeenth Street, N.W., Washington, DC 20006–3939; and (3) Paul A. Cunningham, Esq., Harkins Cunningham, Suite 600, 1300 Nineteenth Street, N.W., Washington, DC 20036.

FOR FURTHER INFORMATION CONTACT: Julia M. Farr, (202) 565–1613. [TDD for the hearing impaired: (202) 565–1695.]

SUPPLEMENTARY INFORMATION: On April 10, 1997, CSX, NS, and Conrail filed a notice of intent (CSX/NS–1) that indicates that they intend to file a 49 U.S.C. 11323–25 application (referred to as the ''primary application'') seeking Board authorization for, among other things, (a) the acquisition by CSX and NS of control of Conrail, and (b) the division of the assets of Conrail by and between CSX and NS. In Decision No. 2, served April 21, 1997, and published that day in the **Federal Register** at 62 FR 19390, we determined that the transaction contemplated by applicants is a major transaction as defined at 49 CFR 1180.2(a), and we invited comments on the procedural schedule proposed by applicants. Comments were filed on or before May 1, 1997, and a decision respecting the procedural schedule will be issued shortly.

Our regulations provide that applicants shall file, concurrently with their 49 U.S.C. 11323–25 primary application, all ''directly related applications, *e.g.*, those seeking authority to construct or abandon rail lines,'' etc. 49 CFR 1180.4(c)(2)(vi). Our regulations also provide, however, that,

[1] CSXC and CSXT are referred to collectively as CSX. NSC and NSR are referred to collectively as NS. CRI and CRC are referred to collectively as Conrail. CSX, NS, and Conrail are referred to collectively as applicants.

[2] In addition to submitting an original and 25 copies of all documents filed with the Board, the parties are encouraged to submit all pleadings and attachments as computer data contained on a 3.5-inch floppy diskette formatted for WordPerfect 7.0 (or formatted so that it can be converted into WordPerfect 7.0) and clearly labeled with the identification acronym and number of the pleading contained on the diskette. *See* 49 CFR 1180.4(a)(2). The computer data contained on the computer diskettes submitted to the Board will be subject to the protective order granted in Decision No. 1, served April 16, 1997 (as modified in Decision No. 4, served May 2, 1997), and is for the exclusive use of Board employees reviewing substantive and/or procedural matters in this proceeding. The flexibility provided by such computer data will facilitate expedited review by the Board and its staff.

for good cause shown, we can waive the requirements otherwise imposed by our regulations. 49 CFR 1180.4(f)(1).

We address, in this decision, two petitions filed by applicants that seek a waiver of the otherwise applicable requirements of 49 CFR 1180.4(c)(2)(vi): the CSX–1 waiver petition filed May 2, 1997, by CSXC, CSXT, CRI, and CRC; and the NS–1 waiver petition filed May 2, 1997, by NSC and NSR.

Seven construction projects, more fully detailed below, are the focus of the two petitions. Applicants contend that it is critical that these projects, all of which involve connections, be constructed prior to a decision on the primary application if at all possible. Applicants claim that these connections must be in place prior to a decision on the primary application so that, if and when we approve the primary application, CSXT (with respect to four of the connections) and NSR (with respect to the other three) will be immediately able to provide efficient service in competition with each other. Applicants contend that, without early authorization to construct these connections, both CSXT and NSR would be severely limited in their ability to serve important (though different) customers. At the same time, applicants recognize that there can be no construction until we have completed our environmental review of each of these construction projects and the Board has issued a decision approving the construction, and imposing whatever environmental conditions are found to be appropriate.

If we were to grant the waivers sought in the CSX–1 and NS–1 petitions, applicants would file, with respect to each of the seven connections, either a petition or a notice seeking, in either instance, a 49 U.S.C. 10502 exemption for the construction of the particular connection. We emphasize that, with respect to each of the seven connections, the petition or the notice (hereinafter referred to as the exemption filing) would seek an exemption only for the construction by CSXT or NSR of, and not for the operation by CSXT or NSR over, the particular connection. All questions respecting operation by CSXT or NSR over these connections would be addressed in the environmental review process of the primary application proceeding and the decision disposing of the primary application; only questions respecting the construction by CSXT or NSR of these connections would be addressed in the decisions disposing of the exemption filings.

We emphasize that, if these waivers are granted, there will be full environmental review of each construction and operation proposal. The environmental effects of operations to be conducted would, as noted, be assessed in our processing of the primary application. As for the proposed constructions, if the waivers are granted, the applicants will be required to file an environmental report containing detailed environmental information regarding construction, assessment of environmental impacts due to construction, and proposed mitigation in this regard for each construction project. The environmental report must reflect consultations with appropriate federal, state, and local agencies, and affected parties. In addition, all written responses from these agencies and parties must be included in the environmental report. The Board's Section of Environmental Analysis (SEA) would then prepare an appropriate environmental document (an environmental assessment (EA) or a full environmental impact statement (EIS)) in each case and provide for input from the public and appropriate federal, state, and local agencies. After full consideration of the public comments and issuance of a final environmental document, we would issue a decision addressing the environmental issues and imposing any necessary environmental mitigation, and if appropriate allowing construction to begin. In short, the environmental review process for these constructions would be precisely what we would undertake in assessing the physical effects of these projects, if these constructions were filed independently of the merger case.

If we were to grant the waivers sought in the CSX–1 and NS–1 petitions, and applicants were thereafter to make their seven exemption filings, and we were to approve the construction of the seven connections following the completion of the environmental review, and if applicants were thereafter to construct these connections, and we were then to deny the primary application (or approve it subject to conditions unacceptable to applicants), the resources expended in constructing the seven connections might prove to be of no benefit to applicants. Similarly, if we were generally to approve the primary application but, concurrently therewith, deny (perhaps on environmental grounds) applicants' request to operate over any particular connection, the resources expended in constructing that particular connection might prove to be of no benefit to applicants. Applicants have acknowledged, and have indicated that they are willing to accept, these risks.

We emphasize that, if we were to grant the waivers sought in the CSX–1 and NS–1 petitions, our grant of these waivers would not in any way constitute approval of, or even indicate any consideration on our part respecting approval of, the primary application. It is also appropriate to note that, if we were to grant the waivers sought in the CSX–1 and NS–1 petitions, applicants would not be allowed to argue that, because we had granted the waivers, we should approve the primary application.

The CSX Connections

If we were to grant the waiver sought in the CSX–1 petition, CSXT would file, in four separate dockets,[3] a notice of exemption pursuant to 49 CFR 1150.36 for construction of a connection at Crestline, OH, and petitions for exemption pursuant to 49 U.S.C. 10502 and 49 CFR 1121.1 and 1150.1(a) for the construction of connections at Willow Creek, IN, Greenwich, OH, and Sidney, OH. CSXT indicates that it would consult with appropriate federal, state, and local agencies with respect to any potential environmental effects from the construction of these connections and would file environmental reports with SEA at the time that the notice and petitions are filed. The connections at issue are as follows.

(1) Two main line CRC tracks cross at Crestline, and CSXT proposes to construct in the northwest quadrant a connection track between those two CRC main lines. The connection would extend approximately 1,142 feet between approximately MP 75.5 on CRC's North-South main line between Greenwich, OH, and Indianapolis, IN, and approximately MP 188.8 on CRC's East-West main line between Pittsburgh, PA, and Ft. Wayne, IN.

(2) CSXT and CRC cross each other at Willow Creek, and CSXT proposes to construct a connection track in the southeast quadrant between the CSXT main line and the CRC main line. The connection would extend approximately 2,800 feet between approximately MP BI–236.5 on the CSXT main line between Garrett, IN, and Chicago, IL, and approximately MP 248.8 on the CRC main line between Porter, IN, and Gibson Yard, IN (outside Chicago).

(3) The lines of CSXT and CRC cross each other at Greenwich, and CSXT proposes to construct connection tracks in the northwest and southeast quadrants between the CSXT main line and the CRC main line. The connection in the northwest quadrant would extend approximately 4,600 feet between

[3] These dockets would be sub-dockets under STB Finance Docket No. 33388.

approximately MP BG–193.1 on the CSXT main line between Chicago and Pittsburgh, and approximately MP 54.1 on the CRC main line between Cleveland and Cincinnati. A portion of this connection in the northwest quadrant would be constructed utilizing existing trackage and/or right-of-way of the Wheeling & Lake Erie Railway Company. The connection in the southeast quadrant would extend approximately 1,044 feet between approximately MP BG–192.5 on the CSXT main line and approximately MP 54.6 on the CRC main line.

(4) CSXT and CRC lines cross each other at Sidney Junction, and CSXT proposes to construct a connection track in the southeast quadrant between the CSXT main line and the CRC main line. The connection would extend approximately 3,263 feet between approximately MP BE–96.5 on the CSXT main line between Cincinnati, OH, and Toledo, OH, and approximately MP 163.5 on the CRC main line between Cleveland, OH, and Indianapolis, IN.

CSXT argues that, if it must wait for approval of the primary application before it can begin construction of these four connections, its ability to compete effectively with NSR upon the effectiveness of a Board order approving the primary application will be severely compromised. CSXT claims that, if it could not offer competitive rail service from New York to Chicago and New York to Cincinnati using lines that it proposes to acquire from CRC (including its new ''Water Level Route'' between New York and Cleveland), the achievement of effective competition between CSXT and NSR would be delayed significantly. CSXT adds that, if it cannot compete effectively with NSR ''out of the starting blocks,'' this initial competitive imbalance could have a deleterious, and long term, effect on CSXT's future operations and its ability to compete effectively with NSR even when the connections are ultimately built.

CSXT claims that, if construction could not begin prior to any approval of the primary application, the time needed for construction and signal work could delay competitive operations for as long as 6 months after the Board did take action on the primary application. CSXT asserts that it would like to begin construction by as early as September 1, 1997, to avoid the delay that would result from the interruption of construction due to the onset of winter.[4] CSX–1 at 8 n.8.

[4] We note that our environmental review of these constructions may not be completed by that time, even if these waiver requests are granted.

The NS Connections

If we were to grant the waiver sought in the NS–1 petition, NSR would file, in three separate dockets,[5] petitions for exemption pursuant to 49 U.S.C. 10502 and 49 CFR 1121.1 and 1150.1(a) for the construction of connections at Alexandria, IN, Colsan/Bucyrus, OH, and Sidney, IL. NSR indicates that it would consult with appropriate federal, state, and local agencies with respect to any potential environmental effects from the construction of these connections and would file environmental reports with SEA at the time that the petitions are filed. The connections at issue are as follows.

(1) The Alexandria connection would be in the northeast quadrant between former CRC Marion district lines to be operated by NSR and NSR's existing Frankfort district line. The new connection would allow traffic flowing over the Cincinnati gateway to be routed via a CRC line to be acquired by NSR to CRC's Elkhart Yard, a major CRC classification yard for carload traffic. This handling would permit such traffic to bypass the congested Chicago gateway. NSR estimates that the Alexandria connection would take approximately 9.5 months to construct.

(2) The Colsan/Bucyrus connection would be in the southeast quadrant between NSR's existing Sandusky district line and the former CRC Ft. Wayne line. This new connection would permit NSR to preserve efficient traffic flows, which otherwise would be broken, between the Cincinnati gateway and former CRC northeastern points to be served by NSR. NSR estimates that the Colsan/Bucyrus connection would take approximately 10.5 months to construct.

(3) The Sidney connection would be between NSR and Union Pacific Railroad Company (UPRR) lines. NS believes that a connection would be required in the southwest quadrant of the existing NSR/UPRR crossing to permit efficient handling of traffic flows between UPRR points in the Gulf Coast/Southwest and NSR points in the Midwest and Northeast, particularly customers on CRC properties to be served by NSR. NSR estimates that the Sidney connection would take approximately 10 months to construct.

NSR states that prompt construction of its three connections is critical to permit NSR to provide service competitive with CSXT if and when the Board approves the primary application.

[5] These dockets would be sub-dockets under STB Finance Docket No. 33388.

Request for Comments

We understand the central purpose of the CSX–1 and NS–1 waiver petitions: a desire to be ready to engage in effective, vigorous competition immediately following consummation of the control authorization applicants intend to seek in their primary application, if such application is approved. We emphasize again what applicants acknowledge—that any resources expended in the construction of these connections may prove to be of no benefit to them if we ultimately deny the primary application, or approve it subject to conditions unacceptable to applicants, or approve the primary application but deny applicants' request to operate over any or all of the seven connections. Nonetheless, given applicants' willingness to assume those risks, we are not inclined to prevent applicants from pursuing this approach simply to protect them from the attendant risks.

As noted, we believe that there would be full environmental review of these constructions even if these waivers were granted. Moreover, there would be ample opportunity for public involvement, except that the public would have to comment now on the seven construction projects and separately later on the operation proposals during the course of the primary application proceeding. To ensure that granting the relief sought in the waiver petitions would not have an adverse effect on persons with concerns, including environmental concerns, involving the seven connections, we are inviting all interested persons to submit written comments respecting the CSX–1 and NS–1 waiver petitions.[6] Comments must be filed by June 2, 1997. Replies may be filed by applicants by June 4, 1997.

Furthermore, we think it appropriate to impose upon CSXT and NSR the following additional service/certification requirements: (1) No later than May 16, 1997: CSXT must serve copies of its CSX–1 petition, and a copy of this Decision No. 5, upon all persons with whom it would be required to consult pursuant to our 49 CFR part 1105 environmental regulations if its CSX–1 petition were an exemption petition; and CSXT must certify to the Board, in writing, that it has complied with this service requirement (and must attach to its certification a list of all such persons). (2) No later than May 16,

[6] We note that, on May 6, 1997, Steel Dynamics, Inc., filed a reply (SDI–3) to the NS–1 petition. We will consider SDI–3 along with other comments received in our subsequent decision deciding the CSX–1 and NS–1 waiver petitions.

1997: NSR must serve copies of its NS–1 petition, and a copy of this Decision No. 5, upon all persons with whom it would be required to consult pursuant to our 49 CFR part 1105 environmental regulations if its NS–1 petition were an exemption petition; and NSR must certify to the Board, in writing, that it has complied with this service requirement (and must attach to its certification a list of all such persons). (3) NSR and CSXT also must serve copies of their petitions and this decision on the Council on Environmental Quality, the Environmental Protection Agency's Office of Federal Activities, and the Federal Railway Administration, and certify that they have done so.[7]

Following receipt of any comments and any replies, we will endeavor to issue a decision on the CSX–1 and NS–1 waiver petitions as soon after June 4, 1997, as is practicable.

This action will not significantly affect either the quality of the human environment or the conservation of energy resources.

Decided: May 7, 1997.

By the Board, Chairman Morgan and Vice Chairman Owen.

Vernon A. Williams,

Secretary.

[FR Doc. 97–12484 Filed 5–12–97; 8:45 am]

BILLING CODE 4915–00–P

[7] With respect to any person upon whom the petitions have already been served, CSXT and NSR are not required to serve their petitions a second time. Rather, with respect to any such person, CSXT and NSR should serve only a copy of Decision No. 5, but should otherwise comply with the certification requirement.

DEPARTMENT OF THE TREASURY

Office of the Comptroller of the Currency

[Docket Number 97–12]

Report to the Congress Regarding the Differences in Capital and Accounting Standards Among the Federal Banking and Thrift Agencies

AGENCY: Office of the Comptroller of the Currency, Treasury.

ACTION: Report to the Committee on Banking, Housing, and Urban Affairs of the United States Senate and to the Committee on Banking and Financial Services of the United States House of Representatives regarding differences in capital and accounting standards among the federal banking and thrift agencies.

SUMMARY: The Office of the Comptroller of the Currency (OCC) has prepared this report as required by the Federal Deposit Insurance Corporation Improvement Act of 1991 (FDICIA). FDICIA requires the OCC to provide a report to Congress on any differences in capital standards among the federal financial regulatory agencies. This notice is intended to satisfy the FDICIA requirement that the report be published in the **Federal Register**.

FOR FURTHER INFORMATION CONTACT: Roger Tufts, Senior Economic Advisor, Office of the Chief National Bank Examiner (202) 874–5070, Eugene Green, Deputy Chief Accountant, Office of the Chief Accountant (202) 874–4933, or Ronald Shimabukuro, Senior Attorney, Legislative and Regulatory Activities Division, (202) 874–5090, Office of the Comptroller of the Currency, 250 E Street, S.W., Washington, DC 20219.

SUPPLEMENTARY INFORMATION:

Differences in Capital and Accounting Standards Among the Federal Banking and Thrift Agencies

Report to the Committee on Banking, Housing, and Urban Affairs of the United States Senate and to the Committee on Banking and Financial Services of the United States House of Representatives

Submitted by the Office of the Comptroller of the Currency

This report[1] describes the differences among the capital requirements of the Office of the Comptroller of the Currency (OCC) and those of the Board of Governors of the Federal Reserve System (FRB), the Federal Deposit Insurance Corporation (FDIC) and the Office of Thrift Supervision (OTS).[2] The report is divided into four sections. The first section provides a short overview of the current capital requirements; the second section discusses the differences in the capital standards; the third section briefly discusses recent efforts of the Agencies to promote more consistent capital standards; and the fourth section discusses the differences in accounting standards related to capital. The report covers developments through December 31, 1996.

A. Overview of the Risk-Based Capital Standards

Since the adoption of the risk-based capital guidelines in 1989, all of the Agencies have applied similar capital standards to the institutions they supervise. The risk-based capital guidelines implement the Accord on International Convergence of Capital Measurement and Capital Standards adopted in July, 1988, by the Basle Committee on Banking Regulations and Supervisory Practices (Basle Accord).

The risk-based capital guidelines establish a framework for imposing capital requirements generally based on credit risk. Under the risk-based capital guidelines, balance sheet assets and off-balance sheet items are categorized, or ''risk-weighted,'' according to the relative degree of credit risk inherent in the asset or off-balance sheet item. The risk-based capital guidelines specify four risk-weight categories—zero percent, 20 percent, 50 percent, and 100 percent. Assets or off-balance sheet items with the lowest levels of credit risk are risk-weighted in the lowest risk weight category; those presenting greater levels of credit risk receive a higher risk weight. Thus, for example, securities issued by the U.S. government are risk-weighted at zero percent; one- to four-family home mortgages are risk-weighted at 50 percent; unsecured commercial loans are risk-weighted at 100 percent.

Off-balance sheet items must first be translated into an on-balance-sheet credit equivalent amount by applying the conversion factors, or multipliers, that are specified in the risk-based capital guidelines of the Agencies. This credit equivalent amount is then assigned to one of the four risk-weight categories. For example, a bank may extend to its customer a line of credit that the customer may borrow against for up to two years. The unused portion of this two year line of credit—that is, the amount of available credit that the customer has not borrowed—is carried as an off-balance sheet item. Under the agencies' risk-based capital guidelines, this unused portion is translated to an on-balance-sheet credit equivalent amount by applying a 50 percent conversion factor, and the resulting amount is then assigned to the 100 percent risk-weight category based on the credit risk of the counterparty.

Once all the assets and off-balance sheet items have been risk-weighted, the

[1] This report is made pursuant to section 121 of the Federal Deposit Insurance Corporation Improvement Act of 1991 (FDICIA), Pub. L. 102–242, 105 Stat. 2236 (December 19, 1991), 12 U.S.C. 1831n(c). Section 121 of FDICIA supersedes section 1215 of the Financial Institutions Reform, Recovery, and Enforcement Act of 1989 (FIRREA), Pub. L. 101–73, 103 Stat. 183 (August 9, 1989), which imposed similar reporting requirement and was repealed.

[2] The OCC is the primary supervisor of national banks. Bank holding companies and state-chartered banks that are members of the Federal Reserve System are supervised by the FRB. State-chartered nonmember banks are supervised by the FDIC. The OTS supervises savings associations and savings and loan holding companies. In this report, the term ''Banking Agencies'' refers to the OCC, FRB and the FDIC; the term ''Agencies'' refers to all four of the agencies, including the OTS.

total amount of all risk-weighted assets and off-balance sheet items is used to determine the total amount of capital required for that institution. Specifically, the risk-based capital guidelines of the Agencies require each institution to maintain a ratio of total capital to risk-weighted assets of 8 percent.

Total capital is comprised of two components—Tier 1 capital (core capital) and Tier 2 capital (supplementary capital).[3] Tier 1 capital includes common stockholders' equity, noncumulative perpetual preferred stock and related surplus, and minority interests in consolidated subsidiaries. Tier 2 capital includes the allowance for loan and lease losses, certain types of preferred stock, some hybrid capital instruments, and certain subordinated debt. These Tier 2 capital instruments, as well as the total amount of Tier 2 capital, are subject to limitations and conditions provided by the risk-based capital guidelines of the Agencies. In addition, the risk-based capital guidelines also require the deduction of certain assets from either Tier 1 capital or total capital. For example, as described in section B(6), all goodwill must be deducted from Tier 1 capital.

Institutions generally are expected to hold capital above the required minimum level, and most institutions usually do exceed minimum risk-based capital requirement. For example, most national banks currently hold capital in excess of 10 percent of risk-weighted assets.[4] However, in addition to the risk-based capital requirement, the Agencies also impose a leverage capital requirement, expressed as the percentage of Tier 1 capital to total assets. Unlike the risk-based capital ratio, the leverage capital ratio is based on total assets, not total risk-weighted assets. This means that the leverage capital ratio is computed without regard to the risk-weight categories assigned to the assets and without including off-balance sheet items.

B. Remaining Differences in Capital Standards of the Agencies

Although the Agencies have adopted common leverage capital requirements and risk-based capital guidelines, there remain some technical differences in language and interpretation of the capital standards. These differences are described in this section. Some of these differences, however, may be eliminated through an interagency rulemaking conducted pursuant to section 303 of the Riegle Community Development and Regulatory Improvement Act of 1994 (CDRI Act).[5] The items in this section for which the Agencies have agreed to propose uniform treatment are marked with an asterisk (*) and further discussed in section C(1)(i) of this report.

*1. Leverage Capital Requirements**

Under the OCC leverage capital requirement, highly-rated banks (composite CAMELS[6] rating of 1) must maintain a minimum leverage capital ratio of at least 3 percent of Tier 1 capital to total assets. All other banks must maintain an additional 100 to 200 basis points of Tier 1 capital to total assets. The OCC leverage capital requirement is the same as the rules of the other Banking Agencies.

Saving associations are subject to a leverage ratio requirement of 3 percent of core capital[7] to adjusted total assets and a tangible capital requirement of 1.5 percent of total assets. The OTS has not yet adopted a final rule to amend its leverage ratio requirement to be consistent with the leverage ratio requirements of the other Banking Agencies. See 56 FR 16238 (April 22, 1991). OTS regulated institutions, however, must satisfy the same percentage requirements for leverage capital as banks in order to be considered adequately capitalized for purposes of the PCA standards applicable to all insured depository institutions. See 12 U.S.C. 1831o.

2. Equity Investments

To the extent that a bank is permitted to hold equity securities (such as securities obtained in connection with debts previously contracted), the OCC risk-based capital guidelines generally require these investments to be risk weighted at 100 percent. However, on a case-by-case basis, the OCC may require deduction of equity investments from the capital of the parent bank or impose other requirements in order to assess an appropriate capital charge above the minimum capital requirements. The other Banking Agencies have similar rules. The capital treatment of equity investments is also discussed in section B(5) of this report.

After the enactment of FIRREA, savings associations were required to deduct equity investments that are impermissible for national banks from capital gradually during a phase-in period. The phase-in period ended July 1, 1996.

3. Assets subject to Guarantee Arrangements by the Federal Savings and Loan Insurance Corporation (FSLIC)/Federal Deposit Insurance Corporation

The OCC risk-based capital guidelines assign assets with FSLIC or FDIC guarantees to the 20 percent risk-weight category, the same category to which claims on depository institutions and government-sponsored agencies are assigned. The other Banking Agencies also assign these assets to the 20 percent weight category. The OTS assigns these

[3] In addition to Tier 1 and Tier 2 capital, the risk-based capital guidelines of the Banking Agencies also permit certain banks to hold limited amounts of Tier 3 capital to satisfy market risk requirements. See section C(2) for further discussion.

[4] In addition to the risk-based capital guidelines, the Agencies have issued regulations implementing the prompt corrective action (PCA) provisions of the Federal Deposit Insurance Corporation Improvement Act of 1991 (FDICIA). FDICIA requires that the Agencies take certain supervisory actions if an institution's capital declines to unacceptable levels. See 12 U.S.C. 1831o. As required by the statute, the PCA regulations establish four capital categories that are defined in terms of three separate capital measures (the risk-based capital ratio, the leverage ratio, and the ratio of Tier 1 capital to risk-weighted assets). These four categories are: well capitalized, adequately capitalized, undercapitalized, and significantly undercapitalized. By way of illustration, an institution is well capitalized if its risk-based capital ratio is 10 percent or greater; its leverage ratio is 5 percent or greater; and its ratio of Tier 1 capital to risk-weighted assets is 6 percent or greater. A fifth PCA category—critically undercapitalized—is defined, as the statute requires, as a 2 percent ratio of tangible equity to total assets. See 12 CFR Part 6 (1996) (the OCC's prompt corrective action regulations).

[5] Pub. L. 103–325, section 303, 108 Stat. 2160, 2215 (1994) (codified at 12 U.S.C. 1835). Section 303(a)(2) required that the Agencies ''work jointly * * * to make uniform all regulations and guidelines implementing common statutory or supervisory policies.'' See also Board of Governors of the Federal Reserve System, Federal Deposit Insurance Corporation, Office of the Comptroller of the Currency, and the Office of Thrift Supervision, Joint Report: Streamlining of Regulatory Requirements (September 23, 1996) (Progress report submitted by the Agencies to the Congress pursuant to section 303(a)(3) of the CDRI Act).

[6] On December 9, 1996, the Federal Financial Institutions Examination Council (FFIEC) adopted the revised Uniform Financial Institutions Rating System (UFIRS or CAMELS rating system). The UFIRS is an internal rating system used by the federal and state banking regulators for assessing the soundness of financial institutions on a uniform basis and for identifying those insured institutions requiring special supervisory attention. Among other things, the revised UFIRS added a sixth ''S'' component called ''Sensitivity to Market Risk'' to the CAMELS rating system. This change reflects an increased emphasis by the Agencies on the quality of risk management practices. A final notice was published in the **Federal Register** on December 19, 1996, effective January 1, 1997. See 61 FR 67021 (December 19, 1996).

[7] While the definition of core capital is generally consistent with the definition of Tier 1 capital, there are some differences. Mutual savings associations may include certain nonwithdrawable accounts and pledged deposits as core capital. In addition, under section 221 of FIRREA, 12 U.S.C. 1828(n), qualifying supervisory goodwill was permitted to be included in core capital for savings associations; however, supervisory goodwill was phased out of core capital at the end of 1994.

assets to the zero percent risk-weight category.

4. Limitation on Subordinated Debt and Limited-Life Preferred Stock

The OCC limits the amount of Tier 2 capital that may be included in total capital to no more than 100 percent of Tier 1 capital. Consistent with the Basle Accord, the OCC further limits the amount of subordinated debt and limited-life preferred stock that may be included in Tier 2 capital to 50 percent of Tier 1 capital. In addition, the OCC risk-based capital guidelines require that subordinated debt and limited-life preferred stock be discounted 20 percent in each of the five years prior to maturity. The other Banking Agencies have similar rules.

The OTS risk-based capital rules also limit Tier 2 capital to 100 percent of Tier 1 capital, but do not contain any sublimit on the total amount of limited-life instruments that may be included within Tier 2 capital. In addition, the OTS allows savings associations the option of either (1) discounting maturing capital instruments (issued on or after November 7, 1989) by 20 percent a year over the last five years of their term, or (2) including the full amount of such instruments, provided that the amount maturing in any of the next seven years does not exceed 20 percent of the total capital of the savings association.

*5. Subsidiaries**

Consistent with the Basle Accord, the Banking Agencies generally require that significant[8] majority-owned subsidiaries be consolidated with the parent institution for both regulatory reporting and capital purposes. If a subsidiary is not consolidated, the bank's investment in the subsidiary constitutes a capital investment in the subsidiary. The OCC risk-based capital guidelines specifically provide that capital investments in an unconsolidated banking or financial subsidiary must be deducted from the total capital of the bank. The OCC risk-based capital guidelines also permit the OCC to require the deduction of investments in other subsidiaries and associated companies on a case-by-case basis. In addition, Part 5 of the OCC's regulations requires deconsolidation of any subsidiary that engages as principal in activities not permitted to be conducted in the bank directly, and requires the bank's equity investment in that subsidiary to be deducted from the capital of the bank. See 61 FR 60342 (November 27, 1996).

The FRB risk-based capital guidelines for state member banks generally require the deduction of investments in unconsolidated banking and finance subsidiaries. The FRB may require an investment in unconsolidated subsidiaries other than banking and finance subsidiaries or joint ventures and associated companies, (1) to be deducted, (2) to be appropriately risk-weighted against the proportionate share of the assets of the entity, or (3) to be consolidated line-by-line with the entity. In addition, the FRB may require the parent organization to maintain capital above the minimum standard sufficient to compensate for any risks associated with the investment.

The FRB risk-based capital guidelines also explicitly permit the deduction of investments in certain subsidiaries that, while consolidated for accounting purposes, are not consolidated for certain specified supervisory or regulatory purposes. For example, the FRB deducts investments in, and unsecured advances to, ''Section 20'' securities subsidiaries from the capital of the parent bank holding company.

The FDIC accords similar treatment to certain type of securities subsidiaries of state-chartered nonmember banks. Moreover, under the FDIC rules, investments in, and extensions of credit to, certain mortgage banking subsidiaries are also deducted in computing the capital of the parent bank. Neither the OCC nor the FRB has a similar requirement with regard to mortgage banking subsidiaries.

Under OTS risk-based capital guidelines, a distinction is made between saving associations subsidiaries engaged in activities permissible for national banks and their subsidiaries and saving association subsidiaries engaged in activities ''impermissible'' for national banks. This distinction is mandated by FIRREA. Subsidiaries of savings associations that engage only in activities permissible for national banks are consolidated on a line-for-line basis if majority-owned and on a *pro rata* basis if ownership is between 5 percent and 50 percent. As a general rule, investments, including loans, in subsidiaries that engage in national bank-impermissible activities are deducted in computing tangible and core capital of the parent association. The remaining assets (the percent of assets corresponding to the nondeducted portion of the investment in the subsidiary) are consolidated with the assets of the parent association. However, investments, including loans outstanding as of April 12, 1989, to subsidiaries that were engaged in impermissible activities prior to that date, are grandfathered. These investments were required to be phased-out of capital by July 1, 1994; however, the transition period for investments made prior to April 12, 1989, in nonincludable real estate subsidiaries could be extended, in certain circumstances, to July 1, 1996. See 12 U.S.C. 1464(t)(5)(D). During this transition period, investments in subsidiaries engaged in impermissible activities that had not been phased out of capital were consolidated on a *pro rata* basis.

6. Nonresidential Construction and Land Loans

Under the OCC risk-based capital guidelines, loans for real estate development and construction are assigned to the 100 percent risk-weight category. Reserves or charge-offs are required for such loans when weaknesses or losses develop. The OCC has no requirement for an automatic charge-off when the amount of a loan exceeds the fair value of the property pledged as collateral for the loan. The other Banking Agencies have similar rules.

OTS generally also assigns these loans to the 100 percent risk-weight category. However, if the amount of the loan exceeds 80 percent of the fair value of the property, savings associations must deduct the full amount of the excess portion from total capital.[9]

7. Mortgage-Backed Securities (MBS)

The OCC risk-based capital guidelines generally assign a risk weight to privately-issued MBSs according to the underlying assets, but in no case is a privately-issued MBS assigned to the zero percent risk-weight category. Privately-issued MBSs, where the direct underlying assets are mortgages, are generally assigned a risk weight of 50 percent or 100 percent. Privately-issued MBSs that have government agency or government-sponsored agency securities as their direct underlying assets are generally assigned to the 20 percent risk-weight category. The other Banking Agencies have similar rules.

[8] A significant majority-owned subsidiary is a subsidiary in which the investment by the parent bank represents a significant financial interest of the parent bank as evidenced by (1) the bank investment or advances to the subsidiary equals 5 percent or more of the total equity capital of the bank, (2) the bank's proportional share of the gross income or revenue of the subsidiary equals 5 percent or more of the gross income or revenue of the bank, (3) the income (or loss before taxes) of the subsidiary amount to 5 percent or more of the income (or loss before taxes) of the bank, or (4) the subsidiary is the parent of a subsidiary that is considered a significant subsidiary.

[9] Prior to July 1, 1994, only a percentage (as provided by a phase-in schedule) of the excess portion was required to be deducted from total capital.

Similarly, the OTS assigns privately issued MBSs backed by securities issued or guaranteed by government agencies or government-sponsored enterprises to the 20 percent risk-weight category. However, unlike the Banking Agencies, the OTS also assigns certain privately-issued high quality mortgage-related securities with AA or better investment ratings to the 20 percent risk-weight category. Like the Banking Agencies, the OTS does not assign any privately issued MBS to the zero percent category.

With respect to other MBSs, the Agencies assign to the 100 percent risk-weight category certain MBSs, including interest-only strips, residuals, and similar instruments that can absorb more than their *pro rata* share of loss.

8. Agricultural Loan Loss Amortization

In determining regulatory capital, those banks accepted into the agricultural loan loss amortization program pursuant to Title VIII of the Competitive Equality Banking Act of 1987 are permitted to defer and amortize losses incurred on agricultural loans between January 1, 1984, and December 31, 1991.[10] The program also applies to losses incurred between January 1, 1983, and December 31, 1991, as a result of reappraisals and sales of agricultural other real estate owned and agricultural personal property. These losses must be fully amortized over a period not to exceed seven years and, in any case, must be fully amortized by year-end 1998. Savings associations are not eligible to participate in the agricultural loan loss amortization program established by this statute.

*9. Treatment of Junior Liens on One- to Four-Family Properties**

In some cases, a banking organization may make two loans secured by the same residential property; one loan is secured by a first lien, the other by a second lien. The OCC and the FDIC generally assign first liens on one-to four-family properties to the 50 percent risk-weight category. The assignment of first lien mortgages to the 50 percent risk-weight category is based upon the expectation that banks will adhere to the requirement for prudent underwriting standards with respect to the maximum loan-to-value ratio, the borrower's paying capacity and the long-term expectations for the real estate market in which the bank is lending.

The OCC assigns all second liens on residential property to the 100 percent risk-weight category, regardless of whether the institution also holds the first lien. The FDIC similarly assigns all second liens to the 100 percent risk-weight category. However, in determining the risk-weight of the first lien, the FDIC considers the first and second liens together to assess whether the first lien satisfies prudent underwriting standards. When evaluated together, if the first and second liens are within the prudent loan-to-value ratio and satisfy all other underwriting standards, then the first lien will be assigned to the 50 percent risk-weight category; otherwise, it will be assigned to the 100 percent risk-weight category.

The FRB and OTS consider the first and second liens as a single loan, provided there are no intervening liens. Therefore, the total amount of these transactions may be assigned to the 100 percent risk-weight category, if, in the aggregate, the two loans exceed a prudent loan-to-value ratio and, therefore, do not qualify for the 50 percent risk-weight category. This approach is intended to avoid possible circumvention of the capital requirements and capture the risks associated with the combined transactions. However, if the total amount of the transaction does satisfy a prudent loan-to-value ratio and other underwriting standards, then both the first and second liens may be assigned to the 50 percent risk-weight category.

10. Pledged Deposits and Nonwithdrawable Accounts

Pledged deposits and nonwithdrawable accounts that satisfy specified OTS criteria may be included in core capital by mutual savings associations. Pledged deposits and nonwithdrawable accounts generally represent capital investments in mutual saving associations under the same terms as perpetual noncumulative preferred stock. These mutual saving associations accept capital investments in the form of pledged deposits and nonwithdrawable accounts because mutual associations are not legally authorized to issue common or preferred stock. Income capital certificates and mutual capital certificates that were issued by savings associations under applicable statutory authority and regulations and held by the FDIC may be included in Tier 2 capital by savings associations.

These instruments are unique to savings associations and are not held by commercial banks. Consequently, these instruments are not addressed in the OCC risk-based capital guidelines.

*11. Mutual Funds**

The OCC and the other Banking Agencies generally assign all of the holdings of a bank in a mutual fund to the risk category appropriate to the asset with the highest risk that a particular mutual fund is *permitted* to hold under its operating rules. This approach takes into account the maximum degree of risk to which a bank may be exposed when investing in a mutual fund. On a case-by-case basis, however, the OCC may permit a bank to risk weight the investments in a mutual fund on a *pro rata* basis relative to the maximum risk weights of the assets the mutual fund is permitted to hold but limited to no lower than a 20 percent risk weight.

The OTS applies a capital charge based on the riskiest asset that is actually held by the mutual fund at a particular time. In addition, the OTS and OCC guidelines also permit, on a case-by-case basis, investments in mutual funds to be risk weighted on a *pro rata* basis dependent on the actual composition of the fund.

*12. Collateralized Transactions**

Both the OCC and FRB permit certain loans and transactions collateralized by cash and OECD government securities to qualify for a zero percent risk weight. The FDIC and OTS risk weight loans and transactions collateralized by cash and OECD government securities at 20 percent. See discussion in section C(1)(i) of this report.

C. Recent Interagency Rulemaking Projects

The three Banking Agencies have amended their capital adequacy rules in several significant ways since they were originally adopted. First, the credit risk framework of the risk-based capital guidelines has been expanded to cover derivative contracts. Second, the risk-based capital guidelines have been amended to incorporate a market risk component which serves to supplement credit risk. Third, all four Agencies have added an interest rate risk component to their capital adequacy rules. In amending the capital adequacy rules, the practice of the Agencies is to consult closely with one another even in instances where joint rulemaking is not statutorily required. This ensures that all insured depository institutions are subject to the same standards to the maximum extent feasible. The following describes the most significant rulemaking projects undertaken during the period covered by this report.

[10] This program will sunset January 1, 1999. *See* 60 FR 27401 (May 24, 1995).

1. Amendments to the Risk-Based Capital Credit Risk Framework

This section discusses regulatory efforts of the Agencies to amend the credit risk framework of the risk-based capital guidelines.

a. Expanded Matrix for Derivative Contracts

On September 5, 1995, the OCC and the other Banking Agencies issued a joint final rule on derivative contracts which amended the risk-based capital guidelines to cover derivative contracts. See 60 FR 46170 (September 5, 1995); see also 59 FR 45243 (September 1, 1994) (OCC proposed rule). Specifically, the rule expanded and revised the set of off-balance sheet credit conversion factors used to calculate the potential future credit exposure on derivative contracts and permitted banks to net multiple derivative contracts executed with a single counterparty that are subject to a qualifying bilateral netting contract when calculating the potential future credit exposure.

b. Membership in the Organization for Economic Cooperation and Development (OECD)

Under the risk-based capital guidelines, claims on, or guarantees by, certain entities in OECD-based countries generally are subject to a lower capital charge. See 12 CFR Part 3, Appendix A 3(a)(1)(iii) (securities issued by the United States or the central government of an OECD country subject to zero percent risk weight). On December 20, 1995, the OCC and the other Banking Agencies amended the definition of ''OECD-based country'' to exclude any country that has rescheduled its external sovereign debt within the previous five years. See 60 FR 66042 (December 20, 1995). This rule was issued in response to a change by the Basle Committee on Banking Regulations and Supervisory Practices to the Basle Accord.

c. Unrealized Gains and Losses on Securities Available for Sale

The Agencies have all issued final rules on unrealized gains and losses on securities available for sale. The final rules were developed jointly by the OCC and the other Agencies in response to Financial Accounting Standard (FAS) 115, which generally requires net unrealized gains and losses on securities available for sale to be included in capital. See Financial Accounting Standards Board, Statement of Financial Accounting Standards Number 115 (Accounting for Certain Investments in Debt and Equity Securities), No. 126-D (May 1993). The Federal Financial Institutions Examination Council adopted FAS 115 for regulatory reporting purposes beginning December 15, 1993.

The proposed rules of the Agencies would have adopted FAS 115 for regulatory capital purposes by amending the definition of ''common stockholders' equity'' in the capital guidelines to include both unrealized gains and losses on securities available for sale. However, after careful consideration of the comments received, the OCC, along with the other Agencies, decided not to adopt the proposed rule because of the potential volatility that could result if FAS 115 unrealized gains and losses are required to be included in regulatory capital. Consequently, the OCC final rule does not require national banks to use FAS 115 for the purposes of computing regulatory capital. See 59 FR 60552 (November 25, 1994). The FDIC, the OTS and the FRB issued similar final rules. See 59 FR 66662 (December 28, 1994) (FDIC final rule); 60 FR 42025 (August 15, 1995) (OTS final rule); and 59 FR 63641 (December 8, 1994) (FRB final rule).

d. Concentrations of Credit and Nontraditional Activities

The Agencies have implemented section 305 of FDICIA by amending their capital adequacy rules to explicitly identify concentrations of credit risk and certain risks arising from nontraditional activities as important factors in assessing each institution's overall capital adequacy. The four Agencies issued a joint final rule on the risks from concentrations of credit and nontraditional activities. The final rule was published in the **Federal Register** on December 15, 1994. See 59 FR 64561 (December 15, 1994).

e. Bilateral Netting Contracts

On December 28, 1994, the OCC and the OTS issued a joint final rule on bilateral netting contracts. This final rule amended the risk-based capital guidelines to permit netting of certain interest rate and foreign exchange rate contracts in calculating the current exposure portion of the credit equivalent amount of these contracts for risk-based capital purposes. See 59 FR 66645 (December 28, 1994). The FRB and the FDIC issued similar final rules. See 59 FR 62987 (December 7, 1994) (FRB final rule); and 59 FR 66656 (December 28, 1994) (FDIC final rule).

f. Collateralized Transactions

The rule on collateralized transactions amended the OCC risk-based capital guidelines to lower the risk weight from 20 percent to zero percent on certain loans and transactions collateralized by cash or government securities. The OCC issued its final rule on collateralized transactions on December 28, 1994. See 59 FR 66642 (December 28, 1994). See section C(1)(i) for a description of the plan of the Agencies to issue uniform rules with respect to collateralized transactions.

g. Deferred Tax Assets

The OCC final rule on deferred tax assets amended the risk-based capital guidelines to limit the amount of certain deferred tax assets that may be included in an institution's Tier 1 capital to the lesser of (1) the amount of deferred tax assets the institution expects to realize within one year or (2) 10 percent of Tier 1 capital. This final rule was developed jointly by the Agencies in response to FAS 109, which was adopted for regulatory reporting purposes beginning January 1, 1993. See Financial Accounting Standards Board, Statement of Financial Accounting Standards Number 109 (Accounting for Income Taxes), No. 112–A (February 1992). FAS 109 provides guidance on the accounting treatment of income taxes and generally allows banks to report certain deferred tax assets they could not previously recognize. The OCC issued its final rule on February 10, 1994. See 60 FR 7903 (February 10, 1994). The FRB and the FDIC issued similar final rules. See 59 FR 65920 (December 22, 1994) (FRB); and 60 FR 8182 (February 13, 1995) (FDIC). The OTS had adopted this general approach through the issuance of a Thrift Bulletin. See TB–56 (January 1993).

h. Mortgage Servicing Rights

On August 1, 1995, the OCC, the other Banking Agencies, and the OTS issued a joint interim rule with request for comment on the capital treatment of originated mortgage servicing rights (OMSR). See 60 FR 39266 (August 1, 1995). The interim rule was developed in response to FAS 122 on mortgage servicing rights which eliminates the accounting distinction between OMSRs and purchased mortgage servicing rights (PMSR). See Financial Accounting Standards Board, Statement of Financial Accounting Standards Number 122 (Accounting for Mortgage Servicing Rights). Specifically, the interim rule amends the capital adequacy rules to treat OMSRs the same as PMSRs for regulatory capital purposes. Therefore, subject to an overall 50 percent limit of Tier 1 capital, both OMSRs and PMSRs may be included in capital for regulatory capital and PCA purposes.

i. CDRI Act Section 303(a)(2) Capital Amendments

In addition to the general ongoing efforts of the Agencies to achieve uniform capital and accounting standards, as part of the interagency review of regulations under section 303(a)(2) of the RCDRIA, the Agencies currently are evaluating the capital and accounting differences in this report in contemplation of changes to achieve greater uniformity. The Agencies already have issued a joint proposed rule on collateralized transactions as part of their efforts under section 303(a)(2) of the CDRI Act. See 61 FR 42565 (August 16, 1996). Under this joint proposed rule, the FDIC and OTS would adopt a collateralized transactions rule lowering the risk weight from 20 percent to zero percent on certain loans and transactions collateralized by cash or government securities; the OCC and FRB would revise their current collateralized transactions rule to use more uniform language.

In addition to collateralized transactions, the Agencies have identified several other provisions as appropriate for revision under section 303(a)(2) of the CDRI Act. These provisions include the capital treatment of presold residential construction loans, junior liens on one to four-family residential properties, and mutual funds, investments in subsidiaries and the minimum leverage capital requirement. See Joint Report: Streamlining of Regulatory Requirements, pages I–6 through I–9.

2. Market Risk Component

The joint final rule issued by the Banking Agencies on market risk amended the risk-based capital guidelines to incorporate a measure for market risk in foreign exchange and commodity activities and in the trading of debt and equity instruments. Market risk generally represents the risk of loss attributable to on and off-balance sheet positions caused by movements in market prices. The effect of the final rule is to require certain banks with relatively large amounts of trading activities to hold additional capital based on the measure of their market risk exposure as determined by the banks own internal value-at-risk model. The final rule also establishes a third capital category, Tier 3 capital, which generally consists of certain short term subordinated debt subject to a lock-in clause that prevent the issuer from repayment if the bank's risk-based capital ratio falls below 8 percent. Tier 3 capital can only be used to satisfy market risk capital requirements. The joint final rule was issued by the Banking Agencies on September 6, 1996. See 61 FR 47358 (September 6, 1996).

3. Interest Rate Risk Component

The joint final rule issued by the Banking Agencies on interest rate risk amended the capital adequacy rules to clarify the authority of the Banking Agencies to specifically include in their evaluation of bank capital an assessment of the exposure to declines to bank's capital due to changes in interest rates. The final rule on interest rate risk was issued jointly by the OCC and the other Banking Agencies on August 2, 1995. See 60 FR 39490 (August 2, 1995). The Banking Agencies also have issued a joint policy statement on interest rate risk on June 26, 1996. See 61 FR 33166 (June 26, 1996). The joint policy statement provides guidance to banks on measuring and managing their interest rate risk exposure.

The OTS has adopted an interest rate risk component to its risk-based capital guidelines, which became effective on January 1, 1994. Once fully implemented, under the OTS rule thrift institutions with an above normal level of interest rate risk will be subject to a capital charge commensurate to their risk exposure. Unlike the interest rate risk rules of the Banking Agencies, the OTS rule, when implemented, would impose an automatic capital charge for interest rate risk over a specified level. In addition, under the OTS rule, the OTS collects data and computes the interest rate risk exposure and corresponding capital charge for all thrift institutions required to report.

4. Recourse

In general, recourse is the risk of loss retained by an institution when it sells an asset. Recourse arrangements allow the purchaser of an asset to seek recovery against the institution that sold the asset under the conditions in the agreement. Under the current risk-based capital guidelines of the Banking Agencies, sales of assets involving recourse generally must be reported as financings which means that the assets are retained on the balance sheet of the selling bank. The OTS treats sales with recourse as sales for regulatory reporting and leverage ratio purposes if they meet the criteria under generally accepted accounting principles (GAAP) for sales treatment, including the establishment of a recourse liability account for reasonably estimated losses from the recourse obligation.

a. Low Level Recourse

Prior to the adoption of the final rule on low level recourse, the risk-based capital guidelines of the Banking Agencies had the effect of requiring a full leverage and risk-based capital charge whenever assets are sold with recourse, even if the institution's maximum exposure under the recourse obligation is less than the capital charge on the asset sold. On April 10, 1995, the OCC issued a final rule on low level recourse. See 60 FR 17986 (April 10, 1995). This final rule amends the risk-based capital guidelines to limit the amount of capital that a bank must hold to the maximum contractual loss exposure retained by the bank under the recourse obligation if that amount is less than the amount of the effective capital requirement for the underlying asset. This final rule implements the requirements of section 350 of the CDRI Act (12 U.S.C. 4808), which generally limits the risk-based capital charge for assets transferred with recourse to the amount of recourse the bank is contractually liable under the recourse agreement. The FRB and the FDIC issued similar final rules. See 60 FR 8177 (February 13, 1995) (FRB final rule); and 60 FR 15858 (March 28, 1995) (FDIC final rule). The OTS capital rules already reflected this position on low level recourse.

b. Recourse and Direct Credit Substitutes

On May 25, 1994, the Agencies jointly issued an advance notice of proposed rulemaking (ANPR) on recourse. See 59 FR 27116 (May 25, 1995). The ANPR proposed an approach that would use credit ratings to more closely match the risk-based capital assessment to an institution's relative risk of loss in certain asset securitizations.

c. Small Business Loan Recourse

Section 208 of the CDRI Act (12 U.S.C. 1835) generally reduces the amount of capital required to be held by certain qualified institutions for recourse retained in certain transfers of small business loans and leases of personal property. Currently, the Agencies are engaged in rulemaking to implement section 208. The FRB issued a final rule on August 31, 1995. See 60 FR 45612 (August 31, 1995). The FDIC, OTS, and the OCC, have issued interim rules with request for comment. See 60 FR 45606 (August 31, 1995) (FDIC interim rule); 60 FR 45618 (August 31, 1995) (OTS interim rule); and 60 FR 47455 (September 13, 1995) (OCC interim rule).

D. Interagency Differences in Accounting Principles

The regulatory reporting standards for all commercial banks, whether regulated by the OCC, the FRB, or the FDIC, are prescribed in the instructions to the Call Report. The Call Report instructions are prepared by the Federal Financial Institutions Examination Council (FFIEC) and require banks to follow generally accepted accounting principles (GAAP) for reports of condition and income required to be filed with the Banking Agencies except as permitted under section 121 of FDICIA. Under section 121 of FDICIA, the Banking Agencies must require financial institutions to use accounting principles ''no less stringent than GAAP'' for reports of condition and income to be filed with the Banking Agencies. Reporting in accordance with GAAP generally satisfies this statutory requirement.

Although the accounting and reporting requirements imposed by the Banking Agencies were, for the most part, already consistent with GAAP, on November 3, 1995, the FFIEC announced the full adoption of GAAP as the reporting basis for the Call Report. Proposed Call Report changes to further conform the Call Report with GAAP were published for comment on September 16, 1996. See 61 FR 48687 (September 16, 1996). The final Call Report changes were published on February 21, 1997. See 62 FR 8078 (February 21, 1997).

The OTS requires each savings association to file the Thrift Financial Report. That report is filed on a basis consistent with GAAP as it is applied by savings associations, which differs in a few respects from GAAP as GAAP applies to banks. These current differences in accounting principles between the banks and thrift institutions result in some differences in financial statement presentation and in amounts of regulatory capital required to be maintained by these institutions. The following summarizes the significant differences between the Thrift Financial Report and the Call Report as of year-end 1996. However, the implementation of the current Call Report changes to move toward the full adoption of GAAP by the Banking Agencies will essentially eliminate substantive accounting differences among the Agencies. As a result most of the accounting differences discussed in this section will be eliminated. To the degree, any accounting differences remain, the Agencies will continue to work toward reconciling those remaining differences.

1. Futures and Forward Contracts

Differences in this area result because the Banking Agencies generally require future and forward contracts to be marked to market, whereas under GAAP savings associations may defer gains and losses resulting from certain hedging activities.

The Banking Agencies do not follow GAAP, but require banks to report changes in the market value of futures and forward contracts, even when used as hedges, in current income. However, futures contracts used to hedge mortgage banking operations are reported in accordance with GAAP. The accounting for futures and forward contracts is being reexamined by the Financial Accounting Standards Board (FASB) as part of an ongoing project on accounting for derivatives.

The OTS requires savings associations to follow GAAP to account for futures contracts. Accordingly, when specified hedging criteria are satisfied, the accounting for the futures contract is matched with the accounting for the hedged item. Changes in the market value of the futures contract are recognized in income when the income effects of the hedged item are recognized. This reporting can result in the deferral of both gains and losses. Although there is no specific GAAP for forward contracts, the OTS applies these same principles to forward contracts.

2. Push-Down Accounting

When a depository institution is acquired in a purchase transaction, the holding company is required to revalue all of the assets and liabilities of the depository institution at fair value at the time of acquisition. When push-down accounting is applied, the same fair value adjustments recorded by the parent holding company are also recorded at the depository institution level.

All of the agencies require the use of push-down accounting when there has been a substantial change in the ownership of the institution. However, differing standards have been applied to determine when this substantial change has occurred.

The Banking Agencies require push-down accounting when there is at least a 95 percent change in ownership of the institution. This approach is consistent with interpretations of the Securities and Exchange Commission.

The OTS requires push-down accounting when there is at least a 90 percent change of ownership.

3. Excess Service Fees

Excess service fees are created when a bank sells mortgage loans, but retains the servicing rights. Excess service fees represent the present value of the servicing fees in excess of the normal servicing fee. Savings associations consider excess servicing fees in the determination of the gain or loss on a loan sale, whereas banks generally recognize the excess fee over the life of the loan.

The Banking Agencies require banks to follow GAAP for residential first mortgage loans. This requires that when loans are sold with servicing retained and the stated servicing fee is sufficiently higher than a normal servicing fee, the sales price is adjusted to determine the gain or loss from the sale. This allows additional gain recognition for the excess servicing fee at the time of sale and recognizes a normal servicing fee in each subsequent year. This gain cannot exceed the gain assuming the loans were sold with servicing released. In addition, the Banking Agencies allow limited recognition at the time of sale of excess servicing fees for SBA loans.

For all other loans, the Banking Agencies require that excess servicing fees retained on loans sold be recognized over the contractual life of the transferred assets.

The OTS follows GAAP in valuing all excess service fees. Therefore, the accounting stated above for sales of mortgage loans with excess servicing at banking institutions would apply to all loan sales with excess servicing at savings associations.

4. In-substance Defeasance of Debt

The Banking Agencies do not permit banks to defease their liabilities in accordance with FAS 76, whereas saving associations may eliminate defeased liabilities from the balance sheet. FAS 76 concerns the extinguishment of debt. Specifically, FAS 76 specifies that debt is to be considered extinguished if the debtor is relieved of primary liability for the debt by the creditor and it is probable that the debtor will not be required to make future payments as guarantor of the debt. In addition, even though the creditor does not relieve the debtor of its primary obligation, debt is to be considered extinguished if (1) the debtor irrevocably places cash or other essentially risk-free monetary assets in a trust solely for satisfying that debt and (2) the possibility that the debtor will be required to make further payments is remote. The Banking Agencies report in-substance defeased debt as a liability and the securities contributed to the trust as assets with no recognition of any gain or loss on the transaction.

The OTS accounts for debt that has been in-substance defeased in accordance with GAAP. Therefore, when a debtor irrevocably places risk-free monetary assets in a trust solely for satisfying the debt and the possibility that the debtor will be required to make further payments is remote, the debt is considered extinguished. The transfer can result in a gain or loss in the current period.

5. Sales of Assets with Recourse

Banks generally do not report sales of receivables if any risk of loss is retained. Savings associations report sales when the risk of loss can be estimated in accordance with FAS 77.

The Banking Agencies generally allow banks to report transfers of receivables as sales only when the transferring institution: (1) retains no risk of loss from the assets transferred and (2) has no obligation for the payment of principal or interest on the assets transferred. As a result, assets transferred with recourse are reported as financings, not sales.

However, this rule does not apply to the transfer of mortgage loans under certain government programs (GNMA, FNMA, etc.). Transfers of mortgages under one of these programs are automatically treated as sales. Furthermore, private transfers of pools of mortgages are also reported as sales if the transferring institution does not retain more than an insignificant risk of loss on the assets transferred.

The OTS follows GAAP to account for a transfer of all receivables with recourse. A transfer of receivables with recourse is recognized as a sale if: (1) the seller surrenders control of the future economic benefits, (2) the transferor's obligation under the recourse provisions can be reasonably estimated, and (3) the transferee cannot require repurchase of the receivables except pursuant to the recourse provisions.

6. Negative Goodwill

The Banking Agencies require that negative goodwill be reported as a liability, and not netted against the goodwill asset.

The OTS permits negative goodwill to offset the goodwill assets resulting from other acquisitions.

7. Offsetting of Amounts Related to Certain Contracts

Financial Accounting Standards Board Interpretation Number (FIN) 39 became effective in 1994. FIN 39 allows the offsetting of assets and liabilities on the balance sheet (e.g., loans, deposits, etc.), as well as the netting of assets and liabilities arising from off-balance sheet derivatives instruments, when four conditions are met. These conditions relate to whether a valid right of offset exists. FIN 41, which also became effective in 1994, provides for the netting of repurchase and reverse repurchase agreements when certain conditions are met.

The Banking Agencies have adopted FIN 39 solely for on-balance sheet amounts arising from conditional and exchange contracts (e.g., interest rate swaps, options, etc.). The Banking Agencies have not adopted FIN 41. The Call Report's existing guidance, which generally prohibits netting of assets and liabilities, is currently followed in all other cases. The OTS policy on netting of assets and liabilities is consistent with GAAP.

8. Specific Valuation Allowance for and Charge-offs of Troubled Loans

The Banking Agencies generally consider real estate loans that lack acceptable cash flows or other repayment sources to be ''collateral dependent.'' When the fair value of the collateral of such a loan has declined below book value, the loan is reduced to fair value. This approach is consistent with GAAP applicable to banks and FAS 114.

The OTS requires a specific valuation allowance against or partial charge-off of a loan when its book value exceeds its ''value.'' The ''value'' is defined as either the present value of the expected future cash flows discounted at the loan's effective interest rate, the observable market price, or the fair value of the collateral. This policy is also consistent with the requirements of FAS 114.

Effective March 31, 1995, the OTS required that losses on collateral dependent loans be measured based on the fair value of the collateral. Accordingly, after March 31, 1995, the OTS policy regarding the recognition of losses on collateral dependent loans became comparable to that of the Bank Agencies.

Dated: May 6, 1997.

Eugene A. Ludwig,

Comptroller of the Currency.

[FR Doc. 97–12515 Filed 5–12–97; 8:45 am]

BILLING CODE 4810–33–P

DEPARTMENT OF THE TREASURY

Internal Revenue Service

[EE–113–82]

Proposed Collection; Comment Request for Regulation Project

AGENCY: Internal Revenue Service (IRS), Treasury.

ACTION: Notice and request for comments.

SUMMARY: The Department of the Treasury, as part of its continuing effort to reduce paperwork and respondent burden, invites the general public and other Federal agencies to take this opportunity to comment on proposed and/or continuing information collections, as required by the Paperwork Reduction Act of 1995, Public Law 104–13 (44 U.S.C. 3506(c)(2)(A)). Currently, the IRS is soliciting comments concerning an existing notice of proposed rulemaking, EE–113–82, Required Distributions from Qualified Plans and Individual Retirement Plans (§ 1.403(b)–2).

DATES: Written comments should be received on or before July 14, 1997, to be assured of consideration.

ADDRESSES: Direct all written comments to Garrick R. Shear, Internal Revenue Service, room 5571, 1111 Constitution Avenue NW., Washington, DC 20224.

FOR FURTHER INFORMATION CONTACT: Requests for additional information or copies of the information collection should be directed to Carol Savage, (202) 622–3945, Internal Revenue Service, room 5569, 1111 Constitution Avenue NW., Washington, DC 20224.

SUPPLEMENTARY INFORMATION:

Title: Required Distributions from Qualified Plans and Individual Retirement Plans.

OMB Number: 1545–0996.

Regulation Project Number: EE–113–82.

Abstract: This regulation provides rules regarding the minimum distribution requirements applicable to any annuity contract, custodial account, or retirement income account described in Internal Revenue Code section 403(b). The minimum distribution rules do not apply to benefits accrued before January 1, 1987.

Current Actions: There is no change to this existing regulation.

Type of Review: Extension of OMB approval.

Affected Public: Not-for-profit institutions, and state, local, and tribal governments.

Estimated Number of Respondents: 8,400.

Estimated Time Per Respondent: 1 hour.

Estimated Total Annual Burden Hours: 8,400.

The following paragraph applies to all of the collections of information covered by this notice:

An agency may not conduct or sponsor, and a person is not required to respond to, a collection of information unless the collection of information displays a valid OMB control number. Books or records relating to a collection of information must be retained as long as their contents may become material in the administration of any internal revenue law. Generally, tax returns and tax return information are confidential, as required by 26 U.S.C. 6103.

Request for Comments

Comments submitted in response to this notice will be summarized and/or included in the request for OMB approval. All comments will become a matter of public record. Comments are invited on: (a) Whether the collection of information is necessary for the proper performance of the functions of the agency, including whether the information shall have practical utility; (b) the accuracy of the agency's estimate of the burden of the collection of information; (c) ways to enhance the quality, utility, and clarity of the information to be collected; (d) ways to minimize the burden of the collection of information on respondents, including through the use of automated collection techniques or other forms of information technology; and (e) estimates of capital or start-up costs and costs of operation, maintenance, and purchase of services to provide information.

Approved: May 7, 1997.

Garrick R. Shear,

IRS Reports Clearance Officer.

[FR Doc. 97–12520 Filed 5–12–97; 8:45 am]

BILLING CODE 4830–01–U

DEPARTMENT OF THE TREASURY

Internal Revenue Service

[INTL–978–86]

Proposed Collection; Comment Request for Regulation Project

AGENCY: Internal Revenue Service (IRS), Treasury.

ACTION: Notice and request for comments.

SUMMARY: The Department of the Treasury, as part of its continuing effort to reduce paperwork and respondent burden, invites the general public and other Federal agencies to take this opportunity to comment on proposed and/or continuing information collections, as required by the Paperwork Reduction Act of 1995, Public Law 104–13 (44 U.S.C. 3506(c)(2)(A)).

Currently, the IRS is soliciting comments concerning an existing notice of proposed rulemaking, INTL–978–86, Information Reporting by Passport and Permanent Residence Applicants (§ 301.6039E–1(c)).

DATES: Written comments should be received on or before July 14, 1997 to be assured of consideration.

ADDRESSES: Direct all written comments to Garrick R. Shear, Internal Revenue Service, room 5571, 1111 Constitution Avenue NW., Washington, DC 20224.

FOR FURTHER INFORMATION CONTACT: Requests for additional information or copies of the information collection should be directed to Carol Savage, (202) 622–3945, Internal Revenue Service, room 5569, 1111 Constitution Avenue NW., Washington, DC 20224.

SUPPLEMENTARY INFORMATION:

Title: Information Reporting by Passport and Permanent Residence Applicants.

OMB Number: 1545–1359.

Regulation Project Number: INTL–978–86.

Abstract: This regulation requires applicants for passports and permanent residence status to report certain tax information on the applications. The regulation is intended to enable the IRS to identify U.S. citizens who have not filed tax returns and permanent residents who have undisclosed sources of foreign income and to notify such persons of their duty to file United States tax returns.

Current Actions: There is no change to this existing regulation.

Type of Review: Extension of OMB approval.

Affected Public: Individuals or households.

Estimated Number of Respondents for Passport Applicants: 5,000,000.

Estimated Time Per Respondent: 6 minutes.

Estimated Total Annual Burden Hours for Passport Applicants: 500,000.

Estimated Number of Respondents for Permanent Residence Applicants: 500,000.

Estimated Time Per Respondent: 30 minutes.

Estimated Total Annual Burden Hours for Permanent Residence Applicants: 250,000.

The following paragraph applies to all of the collections of information covered by this notice:

An agency may not conduct or sponsor, and a person is not required to respond to, a collection of information unless the collection of information displays a valid OMB control number. Books or records relating to a collection of information must be retained as long as their contents may become material in the administration of any internal revenue law. Generally, tax returns and tax return information are confidential, as required by 26 U.S.C. 6103.

Request For Comments

Comments submitted in response to this notice will be summarized and/or included in the request for OMB approval. All comments will become a matter of public record. Comments are invited on: (a) Whether the collection of information is necessary for the proper performance of the functions of the agency, including whether the information shall have practical utility; (b) the accuracy of the agency's estimate of the burden of the collection of information; (c) ways to enhance the quality, utility, and clarity of the information to be collected; (d) ways to minimize the burden of the collection of information on respondents, including through the use of automated collection techniques or other forms of information technology; and (e) estimates of capital or start-up costs and costs of operation, maintenance, and purchase of services to provide information.

Approved: May 7, 1997.

Garrick R. Shear,

IRS Reports Clearance Officer.

[FR Doc. 97–12521 Filed 5–12–97; 8:45 am]

BILLING CODE 4830–01–U

DEPARTMENT OF THE TREASURY

Internal Revenue Service

[PS–79–93]

Proposed Collection; Comment Request for Regulation Project

AGENCY: Internal Revenue Service (IRS), Treasury.

ACTION: Notice and request for comments.

SUMMARY: The Department of the Treasury, as part of its continuing effort to reduce paperwork and respondent burden, invites the general public and other Federal agencies to take this opportunity to comment on proposed and/or continuing information collections, as required by the Paperwork Reduction Act of 1995, Public Law 104–13 (44 U.S.C. 3506(c)(2)(A)). Currently, the IRS is soliciting comments concerning an

existing final regulation, PS–79–93 (TD 8633), Grantor Trust Reporting Requirements (§ 1.671–4).

DATES: Written comments should be received on or before July 14, 1997 to be assured of consideration.

ADDRESSES: Direct all written comments to Garrick R. Shear, Internal Revenue Service, room 5571, 1111 Constitution Avenue NW., Washington, DC 20224.

FOR FURTHER INFORMATION CONTACT: Requests for additional information or copies of the information collection should be directed to Carol Savage, (202) 622–3945, Internal Revenue Service, room 5569, 1111 Constitution Avenue NW., Washington, DC 20224.

SUPPLEMENTARY INFORMATION:

Title: Grantor Trust Reporting Requirements.

OMB Number: 1545–1442.

Regulation Project Number: PS–79–93.

Abstract: The information required by these regulations is used by the Internal Revenue Service to ensure that items of income, deduction, and credit of a trust treated as owned by the grantor or another person are properly reported.

Current Actions: There is no change to this existing regulation.

Type of Review: Extension of OMB approval.

Affected Public: Individuals or households, and business or other for-profit organizations.

Estimated Number of Respondents: 1,840,000.

Estimated Time Per Respondent: 30 minutes.

Estimated Total Annual Burden Hours: 920,000.

The following paragraph applies to all of the collections of information covered by this notice:

An agency may not conduct or sponsor, and a person is not required to respond to, a collection of information unless the collection of information displays a valid OMB control number. Books or records relating to a collection of information must be retained as long as their contents may become material in the administration of any internal revenue law. Generally, tax returns and tax return information are confidential, as required by 26 U.S.C. 6103.

Request for Comments

Comments submitted in response to this notice will be summarized and/or included in the request for OMB approval. All comments will become a matter of public record. Comments are invited on: (a) whether the collection of information is necessary for the proper performance of the functions of the agency, including whether the information shall have practical utility; (b) the accuracy of the agency's estimate of the burden of the collection of information; (c) ways to enhance the quality, utility, and clarity of the information to be collected; (d) ways to minimize the burden of the collection of information on respondents, including through the use of automated collection techniques or other forms of information technology; and (e) estimates of capital or start-up costs and costs of operation, maintenance, and purchase of services to provide information.

Approved: May 1, 1997.

Garrick R. Shear,

IRS Reports Clearance Officer.

[FR Doc. 97–12522 Filed 5–12–97; 8:45 am]

BILLING CODE 4830–01–U

DEPARTMENT OF THE TREASURY

Internal Revenue Service

[FI–182–78]

Proposed Collection; Comment Request for Regulation Project

AGENCY: Internal Revenue Service (IRS), Treasury.

ACTION: Notice and request for comments.

SUMMARY: The Department of the Treasury, as part of its continuing effort to reduce paperwork and respondent burden, invites the general public and other Federal agencies to take this opportunity to comment on proposed and/or continuing information collections, as required by the Paperwork Reduction Act of 1995, Public Law 104–13 (44 U.S.C. 3506(c)(2)(A)). Currently, the IRS is soliciting comments concerning an existing notice of proposed rulemaking, FI–182–78, Transfers of Securities Under Certain Agreements (§ 1.1058–1(b)).

DATES: Written comments should be received on or before July 14, 1997, to be assured of consideration.

ADDRESSES: Direct all written comments to Garrick R. Shear, Internal Revenue Service, room 5571, 1111 Constitution Avenue NW., Washington, DC 20224.

FOR FURTHER INFORMATION CONTACT: Requests for additional information or copies of the information collection should be directed to Carol Savage, (202) 622–3945, Internal Revenue Service, room 5569, 1111 Constitution Avenue NW., Washington, DC 20224.

SUPPLEMENTARY INFORMATION:

Title: Transfers of Securities Under Certain Agreements.

OMB Number: 1545–0770.

Regulation Project Number: FI–182–78.

Abstract: Section 1058 of the Internal Revenue Code provides tax-free treatment for transfers of securities pursuant to a securities lending agreement. The agreement must be in writing and is used by the taxpayer, in a tax audit situation, to justify nonrecognition treatment of gain or loss on the exchange of the securities.

Current Actions: There is no change to this existing regulation.

Type of Review: Extension of OMB approval.

Affected Public: Business or other for-profit organizations, individuals, and not-for-profit institutions.

Estimated Number of Respondents: 11,742.

Estimated Time Per Respondent: 50 minutes.

Estimated Total Annual Burden Hours: 9,781.

The following paragraph applies to all of the collections of information covered by this notice:

An agency may not conduct or sponsor, and a person is not required to respond to, a collection of information unless the collection of information displays a valid OMB control number.

Books or records relating to a collection of information must be retained as long as their contents may become material in the administration of any internal revenue law. Generally, tax returns and tax return information are confidential, as required by 26 U.S.C. 6103.

Request for Comments

Comments submitted in response to this notice will be summarized and/or included in the request for OMB approval. All comments will become a matter of public record. Comments are invited on: (a) whether the collection of information is necessary for the proper performance of the functions of the agency, including whether the information shall have practical utility; (b) the accuracy of the agency's estimate of the burden of the collection of information; (c) ways to enhance the quality, utility, and clarity of the information to be collected; (d) ways to minimize the burden of the collection of information on respondents, including through the use of automated collection techniques or other forms of information technology; and (e) estimates of capital or start-up costs and costs of operation, maintenance, and purchase of services to provide information.

Approved: May 6, 1997.

Garrick R. Shear,

IRS Reports Clearance Officer.

[FR Doc. 97–12523 Filed 5–12–97; 8:45 am]

BILLING CODE 4830–01–U

UNITED STATES INFORMATION AGENCY

Culturally Significant Objects Imported for Exhibition; Notice

Determinations

Notice is hereby given of the following determinations: Pursuant to the authority vested in me by the Act of October 19, 1965 (79 Stat. 985, 22 U.S.C. 2459), Executive Order 12047 of March 27, 1978 (43 F.R. 13359, March 29, 1978), and Delegation Order No. 85–5 of June 27, 1985 (50 F.R. 27393, July 2, 1985), I hereby determine that the objects to be included in the exhibit, ''Painting the Universe: Frantisek Kupka, Pioneer in Abstraction'' (See list [1]), imported from abroad for the temporary exhibition without profit within the United States, are of cultural significance. These objects are imported pursuant to a loan agreement with the foreign lenders. I also determine that the exhibition or display of the listed exhibit objects at The Dallas Museum of Art from on or about June 1, 1997, through August 24, 1997, is in the national interest. Public Notice of these determinations is ordered to be published in the **Federal Register.**

Dated: April 30, 1997.

Les Jin,

General Counsel.

[FR Doc. 97–12412 Filed 5–12–97; 8:45 am]

BILLING CODE 8230–01–M

[1] A copy of this list may be obtained by contacting Mr. Paul Manning, Assistant General Counsel, at 202/619–5997, and the address is Room 700, U.S. Information Agency, 301 4th Street, S.W., Washington, D.C. 20547–0001.

federal register

Tuesday
May 13, 1997

Part II

The President

Memorandum of March 27, 1997—Strengthened Protections for Human Subjects of Classified Research

Federal Register
Vol. 62, No. 92
Tuesday, May 13, 1997

Presidential Documents

Title 3—

The President

Memorandum of March 27, 1997

Strengthened Protections for Human Subjects of Classified Research

Memorandum for the Secretary of Defense, the Attorney General, the Secretary of Agriculture, the Secretary of Commerce, the Secretary of Labor, the Secretary of Health and Human Services, the Secretary of Housing and Urban Development, the Secretary of Transportation, the Secretary of Energy, the Secretary of Education, the Secretary of Veterans Affairs, the Director of Central Intelligence, the Administrator of the Environmental Protection Agency, the Administrator of the Agency for International Development, the Administrator of the National Aeronautics and Space Administration, the Director of the National Science Foundation, the Chair of the Nuclear Regulatory Commission, the Director of the Office of Science and Technology Policy, [and] the Chair of the Consumer Product Safety Commission

I have worked hard to restore trust and ensure openness in government. This memorandum will further our progress toward these goals by strengthening the Federal Government's protections for human subjects of classified research.

In January 1994, I established the Advisory Committee on Human Radiation Experiments (the ''Advisory Committee'') to examine reports that the government had funded and conducted unethical human radiation experiments during the Cold War. I directed the Advisory Committee to uncover the truth, recommend steps to right past wrongs, and propose ways to prevent unethical human subjects research from occurring in the future. In its October 1995 final report, the Advisory Committee recommended, among other things, that the government modify its policy governing classified research on human subjects (''Recommendations for Balancing National Security Interests and the Rights of the Public,'' Recommendation 15, Final Report, Advisory Committee on Human Radiation Experiments). This memorandum sets forth policy changes in response to those recommendations.

The Advisory Committee acknowledged that it is in the Nation's interest to continue to allow the government to conduct classified research involving human subjects where such research serves important national security interests. The Advisory Committee found, however, that classified human subjects research should be a ''rare event'' and that the ''subjects of such research, as well as the interests of the public in openness in science and in government, deserve special protections.'' The Advisory Committee was concerned about ''exceptions to informed consent requirements and the absence of any special review and approval process for human research that is to be classified.'' The Advisory Committee recommended that in all classified research projects the agency conducting or sponsoring the research meet the following requirements:

—obtain informed consent from all human subjects;

—inform subjects of the identity of the sponsoring agency;

—inform subjects that the project involves classified research;

—obtain approval by an ''independent panel of nongovernmental experts and citizen representatives, all with the necessary security clearances'' that reviews scientific merit, risk-benefit tradeoffs, and ensures subjects have enough information to make informed decisions to give valid consent; and

—maintain permanent records of the panel's deliberations and consent procedures.

This memorandum implements these recommendations with some modifications. For classified research, it prohibits waiver of informed consent and requires researchers to disclose that the project is classified. For all but minimal risk studies, it requires researchers to inform subjects of the sponsoring agency. It also requires permanent recordkeeping.

The memorandum also responds to the Advisory Committee's call for a special review process for classified human subjects research. It requires that institutional review boards for secret projects include a nongovernmental member, and establishes an appeals process so that any member of a review board who believes a project should not go forward can appeal the boards' decision to approve it.

Finally, this memorandum sets forth additional steps to ensure that classified human research is rare. It requires the heads of Federal agencies to disclose annually the number of secret human research projects undertaken by their agency. It also prohibits any agency from conducting secret human research without first promulgating a final rule applying the Federal Policy for the Protection of Human Subjects, as modified in this memorandum, to the agency.

These steps, set forth in detail below, will preserve the government's ability to conduct any necessary classified research involving human subjects while ensuring adequate protection of research participants.

1. *Modifications to the Federal Policy for the Protection of Human Subjects as it Affects Classified Research.* All agencies that may conduct or support classified research that is subject to the 1991 Federal Policy for the Protection of Human Subjects (''Common Rule'') (56 Fed. Reg. 28010–28018) shall promptly jointly publish in the **Federal Register** the following proposed revisions to the Common Rule as it affects classified research. The Office for Protection from Research Risks in the Department of Health and Human Services shall be the lead agency and, in consultation with the Office of Management and Budget, shall coordinate the joint rulemaking.

(a) The agencies shall jointly propose to prohibit waiver of informed consent for classified research.

(b) The agencies shall jointly propose to prohibit the use of expedited review procedures under the Common Rule for classified research.

(c) The joint proposal should request comment on whether all research exemptions under the Common Rule should be maintained for classified research.

(d) The agencies shall jointly propose to require that in classified research involving human subjects, two additional elements of information be provided to potential subjects when consent is sought from subjects:

(i) the identity of the sponsoring Federal agency. Exceptions are allowed if the head of the sponsoring agency determines that providing this information could compromise intelligence sources or methods and that the research involves no more than minimal risk to subjects. The determination about sources and methods is to be made in consultation with the Director of Central Intelligence and the Assistant to the President for National Security Affairs. The determination about risk is to be made in consultation with the Director of the White House Office of Science and Technology Policy.

(ii) a statement that the project is ''classified'' and an explanation of what classified means.

(e) The agencies shall jointly propose to modify the institutional review board (''IRB'') approval process for classified human subjects research as follows:

(i) The Common Rule currently requires that each IRB ''include at least one member who is not otherwise affiliated with the institution and

who is not part of the immediate family of a person who is affiliated with the institution.'' For classified research, the agencies shall define ''not otherwise affiliated with the institution,'' as a nongovernmental member with the appropriate security clearance.

(ii) Under the Common Rule, research projects are approved by the IRB if a ''majority of those (IRB) members present at a meeting'' approved the project. For classified research, the agencies shall propose to permit any member of the IRB who does not believe a specific project should be approved by the IRB to appeal a majority decision to approve the project to the head of the sponsoring agency. If the agency head affirms the IRB's decision to approve the project, the dissenting IRB member may appeal the IRB's decisions to the Director of OSTP. The Director of OSTP shall review the IRB's decision and approve or disapprove the project, or, at the Director's discretion, convene an IRB made up of nongovernmental officials, each with the appropriate security clearances, to approve or disapprove the project.

(iii) IRBs for classified research shall determine whether potential subjects need access to classified information to make a valid informed consent decision.

2. *Final Rules.* Agencies shall, within 1 year, after considering any comments, promulgate final rules on the protection of human subjects of classified research.

3. *Agency Head Approval of Classified Research Projects.* Agencies may not conduct any classified human research project subject to the Common Rule unless the agency head has personally approved the specific project.

4. *Annual Public Disclosure of the Number of Classified Research Projects.* Each agency head shall inform the Director of OSTP by September 30 of each year of the number of classified research projects involving human subjects underway on that date, the number completed in the previous 12-month period, and the number of human subjects in each project. The Director of OSTP shall report the total number of classified research projects and participating subjects to the President and shall then report to the congressional armed services and intelligence committees and further shall publish the numbers in the **Federal Register**.

5. *Definitions.* For purposes of this memorandum, the terms ''research'' and ''human subject'' shall have the meaning set forth in the Common Rule. ''Classified human research'' means research involving ''classified information'' as defined in Executive Order 12958.

6. *No Classified Human Research Without Common Rule.* Beginning one year after the date of this memorandum, no agency shall conduct or support classified human research without having proposed and promulgated the Common Rule, including the changes set forth in this memorandum and any subsequent amendments.

7. *Judicial Review.* This memorandum is not intended to create any right or benefit, substantive or procedural, enforceable at law by a party against the United States, its agencies, its officers, or any other persons.

8. The Secretary of Health and Human Services shall publish this memorandum in the **Federal Register**.

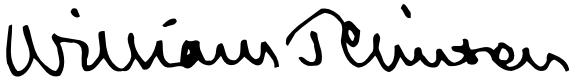

THE WHITE HOUSE,
Washington, March 27, 1997.

[FR Doc. 97–12699
Filed 5–12–97; 8:45 am]
Billing code 4110–60–M

federal register

Tuesday
May 13, 1997

Part III

General Services Administration

41 CFR Parts 302–1 and 302–6

Federal Travel Regulation; ''Last Move Home'' Benefits for Certain Individuals; Payment of Environmental Testing/ Property Inspection Fees; Interim Rule

GENERAL SERVICES ADMINISTRATION

41 CFR Parts 302–1 and 302–6

[FTR Interim Rule 6]

RIN 3090–AF63

Federal Travel Regulation; ''Last Move Home'' Benefits for Certain Individuals; Payment of Environmental Testing/Property Inspection Fees

AGENCY: Office of Governmentwide Policy, GSA.

ACTION: Interim rule.

SUMMARY: This interim rule amends the Federal Travel Regulation (FTR) to implement certain provisions of the Jerry L. Litton United States Post Office Building Act (Pub. L. No. 103–338, October 6, 1994). This Act provides for payment of ''last move home'' benefits for eligible VA medical center directors and also for members of the immediate family of an individual who dies while in Government service and who was eligible for ''last move home'' benefits immediately prior to death. This interim rule also implements the Joint Financial Management Improvement Program (JFMIP) recommendation to allow reimbursement for environmental testing and property inspection fees in connection with the sale or purchase of a home. This interim rule is intended to improve the workforce by enhancing the existing ''last-move-home'' incentive designed to encourage mobility among senior level officials, and to equitably reimburse employees for required environmental testing/home inspection fees.

DATES: *Effective date:* The provisions of this interim rule are effective May 13, 1997.

Applicability dates: The provisions of this interim rule which amend subpart B of part 302–1 of chapter 302 (except for the provision which adds new (§ 302–1.100(a)(3)) apply to an employee whose death occurs on or after January 1, 1994. The provision of this interim rule which adds new (§ 302–1.100(a)(3) applies to eligible medical center directors who separate from Federal service on or after October 2, 1992, for purposes of retirement.

FOR FURTHER INFORMATION CONTACT: Larry A. Tucker, Travel and Transportation Management Policy Division (MTT), Washington, DC 20405, telephone 202–501–1538.

SUPPLEMENTARY INFORMATION:

''Last Move Home'' Benefits for Members of the Immediate Family of a Deceased Employee

This interim rule amends the FTR to implement sections 3, 4, and 5 of the Jerry L. Litton United States Post Office Building Act (Pub. L. 103–338, October 6, 1994), hereinafter referred to as ''the Act''. The Act authorizes payment of ''last move home'' benefits for members of the immediate family of an employee who dies in Government service and who was eligible for ''last-move-home'' benefits at the time of death, or who died after separating but before completing ''last-move-home'' travel and transportation. These implementing provisions will be expanded in the final rule to provide agencies more definitive guidance on extending the last-move-home benefits to a deceased individual's immediate family.

VA Medical Center Directors

Paragraph 49 of section 2 of the Technical and Miscellaneous Civil Service Amendments Act of 1992 (Pub. L. 102–378, October 2, 1992) was enacted for the purpose of allowing VA medical center directors to qualify for ''last move home'' benefits. Section 2 incorrectly referenced 38 U.S.C. 4103(a)(8), as in effect on November 28, 1988. However, medical center directors were removed from 38 U.S.C. 4103(a)(8) on November 18, 1988, thus rendering section 2 ineffective. The Act corrected that error by inserting November 17, 1988 for November 28, 1988. This implementing interim rule allows VA medical center directors who were not SES career appointees to qualify for ''last move home'' benefits.

Environmental Testing and Property Inspection Fees

A multi-agency travel reinvention task force was organized in August 1994 under the auspices of the JFMIP to reengineer Federal travel rules and procedures. The task force developed 25 recommended travel management improvements published in a JFMIP report entitled ''Improving Travel Management Governmentwide,'' dated December 1995. One of the 25 recommendations was to clarify the rules governing reimbursement of environmental testing and property inspection fees. The General Services Administration (GSA), after review of this JFMIP recommendation, has determined that the change is appropriate and is implementing the change through this interim rule.

This interim rule revises the FTR to clarify that environmental testing and property inspection fees are reimbursable when required by Federal, State, or local law, or by the lender as a precondition to sale or purchase.

GSA has determined that this rule is not a significant regulatory action for the purposes of Executive Order 12866 of September 30, 1993. This interim rule is not required to be published in the **Federal Register** for notice and comment, and therefore, the Regulatory Flexibility Act does not apply. This rule also is exempt from Congressional review prescribed under 5 U.S.C. 801 since it relates solely to agency management and personnel.

List of Subjects in 41 CFR Parts 302–1 and 302–6

Government employees, Relocation allowances and entitlements, Transfers.

For the reasons set out in the preamble, 41 CFR parts 302–1 and 302–6 are amended as follows:

PART 302–1—APPLICABILITY, GENERAL RULES, AND ELIGIBILITY CONDITIONS

1. The authority citation for part 302–1 continues to read as follows:

Authority: 5 U.S.C. 5738; 20 U.S.C. 905(a); E.O. 11609, 36 FR 13474, 3 CFR, 1971–1975 Comp., p. 586.

Subpart B—Relocation Entitlements Upon Separation for Retirement

2. Section 302–1.100 is amended by adding new paragraph (a)(3), redesignating paragraph (b) as paragraph (c), and adding new paragraph (b) to read as follows:

§ 302–1.100 Applicability.

(a) * * *

(3) *Medical Center Directors.* The provisions of this subpart are applicable to individuals who:

(i) Served as a director of a Department of Veteran's Affairs medical center under 38 U.S.C. 4103(a)(8) as in effect on November 17, 1988;

(ii) Separated from Government service on or after October 2, 1992; and

(iii) Are not otherwise covered under paragraph (a) (1) or (2) of this section.

(b) *Immediate family of deceased covered individual.* The provisions of this subpart apply to the immediate family of a covered individual, as defined in paragraph (a)(1) of this section, who satisfies the eligibility criteria in § 302–1.101, and who:

(1) Died in Government service on or after January 1, 1994; or

(2) Died after separating from Government service but before travel

and/or transportation authorized under this subpart were completed.

* * * * *

3. Section 302–1.101 is amended by revising the introductory text and paragraph (d) to read as follows:

§ 302–1.101 Eligibility criteria.

Upon separation from Federal service for retirement, a covered individual as defined in § 302–1.100(a) of this subpart (or a deceased covered individual's immediate family as described in § 302–1.100(b)) is eligible for those travel and transportation allowances specified in § 302–1.103 of this subpart, if such individual meets the following criteria:

* * * * *

(d) Is eligible to receive an annuity upon such separation (or, in the case of death in Government service, met the requirements for being considered eligible to receive an annuity, as of the date of death) under the provisions of subchapter III of chapter 83 (CSRS) or chapter 84 (FERS) of title 5, U.S.C., including an annuity based on optional retirement, discontinued service retirement, early voluntary retirement under an OPM authorization, or disability retirement; and

* * * * *

4. Section 302–1.102 is revised to read as follows:

§ 302–1.102 Agency authorization or approval.

Covered individuals. An individual who is eligible for moving expenses under this subpart shall submit a request to the designated agency official for authorization or approval of the moving expenses stating tentative moving dates and origin and destination locations of the planned move. Such requests shall be submitted in a format and timeframe as prescribed by agency policy and procedures.

(b) *Immediate family of deceased covered individual.* Travel and transportation under this subpart are payable for the immediate family of a covered individual who died while in Government service during the period beginning on January 1, 1994, and ending October 6, 1994, upon the immediate family's written application submitted to the designated agency official by May 13, 1998.

5. Section 302–1.105 is amended by revising paragraph (a) to read as follows:

§ 302–1.105 Origin and destination.

(a) The expenses listed in § 302–1.103 may be paid from the official station where separation of the eligible individual occurs to the place where the individual has elected to reside within the United States, the Commonwealth of Puerto Rico or the Commonwealth of the Northern Mariana islands, a United States territory or possession, or the former Canal Zone area (i.e., areas and installations in the Republic of Panama made available to the United states under the Panama Canal Treaty of 1977 and related agreements (as described in section 3(a) of the Panama Canal Act of 1979)); or if the individual dies before separating or after separating but before the travel and transportation are completed, expenses may be paid from the deceased individual's official station at the time of death or where separation occurred, as appropriate, to the place within the areas listed in this paragraph where the immediate family elects to reside even if different from the place elected by the separated eligible individual.

* * * * *

6. Section 302–1.106 is revised to read as follows:

§ 302–1.106 Time limits for beginning travel and transportation.

(a) Except as provided in paragraph (b) of this section, all travel, including that for the separated covered individual, and transportation, including that for household goods, allowed under this subpart, shall be accomplished within 6 months of the date of separation (or date of death if the individual died before separating), or other reasonable period of time as determined by the agency concerned, but in no case later than 2 years from the effective date of the individual's separation from Government service (or date of death if the individual died before separating).

(b) For the immediate family of a covered individual who died in Government service between January 1, 1994 and May 13, 1997, all travel and transportation, including that for household goods, allowed under this subpart, shall be accomplished no later than May 13, 1999.

PART 302–6—ALLOWANCE FOR EXPENSES INCURRED IN CONNECTION WITH RESIDENCE TRANSACTIONS

7. The authority citation for part 302–6 continues to read as follows:

Authority: 5 U.S.C. 5738; 20 U.S.C. 905(a); E.O. 11609, 36 FR 13474, 3 CFR, 1971–1975 Comp., p. 586.

8. Section 302–6.2 is amended by adding paragraph (d)(1)(xi) to read as follows:

§ 302–6.2 Reimbursable and nonreimbursable expenses.

* * * * *

(d) * * *

(1) * * *

(xi) Expenses in connection with environmental testing and property inspection fees when required by Federal, State, or local law; or by the lender as a precondition to sale or purchase.

* * * * *

Dated: May 7, 1997.

David J. Barram,

Acting Administrator of General Services.

[FR Doc. 97–12586 Filed 5–9–97; 4:25 pm]

BILLING CODE 6820–34–P

federal register

Tuesday
May 13, 1997

Part IV

The President

Proclamation 7002—National Defense Transportation Day and National Transportation Week

Federal Register
Vol. 62, No. 92
Tuesday, May 13, 1997

Presidential Documents

Title 3—

The President

Proclamation 7002 of May 9, 1997

National Defense Transportation Day and National Transportation Week, 1997

By the President of the United States of America

A Proclamation

The United States has the finest, safest transportation system in the world—superior highways and waterways, railroads, pipelines, and airports. This system unites a diverse Nation, provides economic opportunity, and enhances our quality of life by giving our citizens almost unrestricted mobility.

As we approach the 21st century, we must maintain the strength and reliability of this transportation system. The globalization of our economy demands more efficient shipping if we are to remain competitive. The growth in passenger traffic spurred by an expanding economy requires new and better ways of enabling people to travel safely and conveniently. In an unpredictable world, our transportation system must be able to quickly move military and other equipment, humanitarian supplies, and people to meet the demands of emergencies and natural disasters throughout the world.

All levels of government and industry are working together to ensure that our transportation system will continue to meet these challenges in the years to come. We must also continue to address the need for a cleaner environment and for sustainable communities, and we must ensure that transportation is available for people with special needs. This effort will require new technologies, advanced materials, improved operating practices and logistical systems, and other innovations.

We must also strive to educate our youth in technology and transportation issues. The Department of Transportation has launched the Garrett A. Morgan Technology and Transportation Futures Program to pursue this important goal through math, science, and technology literacy programs, private-public education partnerships, and other initiatives. An African American, Garrett Morgan invented the traffic signal and is recognized as the father of our safe transportation technology program. He served as a model of public service and as a catalyst to enhance transportation education at all levels.

This week, Americans honor the men and women who, like Garrett Morgan, have done and are doing so much to design, build, operate, and ensure the safety of our transportation system. We salute them for their contributions to our Nation and for helping to ensure that our transportation system remains the best in the world.

In recognition of the millions of Americans who work every day to meet our transportation needs, the Congress, by joint resolution approved May 16, 1957 (36 U.S.C. 160), has designated the third Friday in May of each year as ''National Defense Transportation Day'' and, by joint resolution approved May 14, 1962 (36 U.S.C. 166), declared that the week in which that Friday falls be designated ''National Transportation Week.''

NOW, THEREFORE, I, WILLIAM J. CLINTON, President of the United States of America, do hereby proclaim Friday, May 16, 1997, as National Defense Transportation Day and May 11 through May 17, 1997, as National Transportation Week. I urge all Americans to observe these occasions with appropriate ceremonies and activities, giving due recognition to the individuals and

organizations that build, operate, safeguard, and maintain this country's modern transportation system.

IN WITNESS WHEREOF, I have hereunto set my hand this ninth day of May, in the year of our Lord nineteen hundred and ninety-seven, and of the Independence of the United States of America the two hundred and twenty-first.

William J. Clinton

[FR Doc. 97–12732
Filed 5–12–97; 10:46 am]
Billing code 3195–01–P

Reader Aids

Federal Register

Vol. 62, No. 92

Tuesday, May 13, 1997

CUSTOMER SERVICE AND INFORMATION

Federal Register/Code of Federal Regulations

General Information, indexes and other finding aids **202–523–5227**

Laws

For additional information **523–5227**

Presidential Documents

Executive orders and proclamations **523–5227**

The United States Government Manual **523–5227**

Other Services

Electronic and on-line services (voice) **523–4534**

Privacy Act Compilation **523–3187**

TDD for the hearing impaired **523–5229**

ELECTRONIC BULLETIN BOARD

Free **Electronic Bulletin Board** service for Public Law numbers, Federal Register finding aids, and list of documents on public inspection. **202–275–0920**

FAX-ON-DEMAND

You may access our Fax-On-Demand service. You only need a fax machine and there is no charge for the service except for long distance telephone charges the user may incur. The list of documents on public inspection and the daily Federal Register's table of contents are available using this service. The document numbers are 7050-Public Inspection list and 7051-Table of Contents list. The public inspection list will be updated immediately for documents filed on an emergency basis.

NOTE: YOU WILL ONLY GET A LISTING OF DOCUMENTS ON FILE AND NOT THE ACTUAL DOCUMENT. Documents on public inspection may be viewed and copied in our office located at 800 North Capitol Street, N.W., Suite 700. The Fax-On-Demand telephone number is: **301–713–6905**

FEDERAL REGISTER PAGES AND DATES, MAY

23613–23938 1
23939–24324 2
24325–24558 5
24559–24796 6
24797–25106 7
25107–25420 8
25421–25798 9
25799–26204 12
26205–26380 13

CFR PARTS AFFECTED DURING MAY

At the end of each month, the Office of the Federal Register publishes separately a List of CFR Sections Affected (LSA), which lists parts and sections affected by documents published since the revision date of each title.

3 CFR

Proclamations:
6996 24555
6997 24557
6998 25105
6999 25421
7000 26201
7001 26203
7002 26379

Administrative Orders:
Presidential Determinations:
No. 97–21 of April 24, 1997 23939
Memorandums:
April 24, 1997 24797
March 27, 1997 26369

5 CFR

530 25423
531 25423
591 25423
1312 25426
3801 23941

Proposed Rules:
1603 25558
1640 25559

7 CFR

28 25799
29 24559
226 23613
301 .....23620, 23943, 24746, 24753
340 .....23628, 23945
401 25107
454 23628
457 .....23628, 25107, 26205
718 25433
723 24799
729 25433
1230 26205
1464 24799
1493 24560
1494 24560
1755 .....23958, 25017
1930 25062
1944 .....25062, 25071, 26207
1951 25062
1965 25062
3403 26168

Proposed Rules:
Ch. XIII 24849, 25140
319 .....24849, 25561
321 24849
330 24849
401 23675
405 25140
416 23680
425 23685
435 26248
437 23690
457 .....23675, 23680, 23685, 23690, 25140, 26248
800 26252
1126 26255
1137 24610
1138 26257

8 CFR

292 23634

9 CFR

77 24801
92 23635
94 .....24802, 25439
160 25444
161 25444
304 23639
308 .....23639, 26211
310 .....23639, 26211
327 23639
381 .....23639, 26211
416 .....23639, 26211
417 23639

Proposed Rules:
3 24611

10 CFR

2 26219
52 25800
430 26140
703 24804
1023 24804

Proposed Rules:
71 25146
435 24164

11 CFR

Proposed Rules:
100 24367
104 24367
109 24367
110 24367

12 CFR

229 26220
614 25831
617 24562
618 25831
620 24808
630 24808

Proposed Rules:
Ch. IX 25563

13 CFR

121 24325

Proposed Rules:
120 25874

14 CFR

39 .....23640, 23642, 24009, 24013, 24014, 24015, 24017, 24019, 24021, 24022, 24325, 24567, 24568, 24570, 24809,

24810, 25832, 25833, 25834, 25836, 25837, 25839, 26221, 26223
71 .....23643, 23644, 23646, 23647, 34648, 23649, 23651, 23652, 23653, 23654, 23655, 23656, 24024, 25110, 25112, 25445, 25448, 26224
95.....25448
97.....24025, 25110
187.....24286, 24552
310.....25840
374.....25840
Proposed Rules:
11.....24288
21.....24288
25.....24288
39 .....23695, 23697, 24851, 25130, 25563, 25565, 25566, 26258, 26261
71 .....23699, 25568, 26263, 26264, 26265

15 CFR
730.....25451
732.....25451
734.....25451
736.....25451
738.....25451
740.....25451
742.....25451
744.....25451
750.....25451
752.....25451
754.....25451
756.....25451
758.....25451
762.....25451
764.....25451
768.....25451
770.....25451
772.....25451
950.....24812

16 CFR
Proposed Rules:
1015.....24614

17 CFR
1.....24026, 25470
15.....24026
16.....24026
17.....24026
230.....24572
Proposed Rules:
230.....24160
239.....24160
270.....24160, 24161
274.....24160

18 CFR
284.....25842
Proposed Rules:
4.....25874
154.....24853
375.....25874
430.....25569

19 CFR
122.....24814
Proposed Rules:
111.....24374
163.....24374
351.....25874

20 CFR
429.....24328

21 CFR
172.....26225
812.....26228
Proposed Rules:
Ch. I.....24619
178.....25475
511.....25212, 25153
514.....25152
558.....25477
898.....25477
1308.....24620

22 CFR
41 .....24331, 24332, 24334

24 CFR
5.....24334
573.....24573
950.....24334
3280.....24337
3282.....24337
Proposed Rules:
960.....25728
966.....25728
3500.....25740

26 CFR
1 .....23657, 25498, 25502
301.....25498
602.....25502

27 CFR
Proposed Rules:
9.....24622

28 CFR
0.....23657
45.....23941
544.....25098

29 CFR
Proposed Rules:
4231.....23700

30 CFR
Proposed Rules:
251.....23705
253.....24375
914.....25875

31 CFR
351.....24280
356.....25113, 25224
Proposed Rules:
207.....25572
356.....24375

32 CFR
706.....23658
Proposed Rules:
285.....25875

33 CFR
100.....26229
117.....24338, 25514
154.....25115
155.....25115
156.....25115
165.....23659, 24339
325.....26229
334.....24034
Proposed Rules:
96.....23705
100.....24377
110.....24378
167.....25576

34 CFR
685.....25515
Proposed Rules:
1100.....24860

36 CFR
Proposed Rules:
7.....24624

37 CFR
Proposed Rules:
1.....24865
2.....24865

38 CFR
Proposed Rules:
3.....23724
17.....23731
36.....24872, 24874

39 CFR
20.....25136, 25515
111 .....24340, 25752, 26086
Proposed Rules:
111.....25876
502.....25876
3001.....25578

40 CFR
52 .....24035, 24036, 24341, 24574, 24815, 24824, 24826
60.....24824
81 .....24036, 24038, 24552, 24826, 26230
87.....25356
148.....26998
180 .....24040, 24045, 24835, 24839, 25518, 25524
244.....24051
261.....26998
268.....26998
271.....26998
372.....23834
Proposed Rules:
52 .....24060, 24380, 24632, 24886, 24887
60 .....24212, 24887, 25877
63 .....24212, 25370, 25877
80.....24776, 25879
81.....24065, 26266
87.....25368
148.....26041
180.....24065
228.....26267
260.....24212, 25877
261 .....24212, 25877, 26041
264.....24212, 25877
265.....24212, 25877
266.....24212
268.....26041
270.....24212, 25877
271 .....24212, 25877, 26041
372.....24887

41 CFR
302–1.....26374
302–6.....26374
Proposed Rules:
101–47.....24383

42 CFR
405.....25844
417.....25844
473.....25844
493.....25855

44 CFR
64.....24343
67.....25858
Proposed Rules:
62.....23736
67.....25880

45 CFR
1626.....24054, 24159
1642.....25862

46 CFR
13.....25115
15.....25115
30.....25115
35.....25115
98.....25115
105.....25115
108.....23894
110.....23894
111.....23894
112.....23894
113.....23894
159.....25525
160.....25525
161.....23894
169.....25525
199.....25525
Proposed Rules:
2.....23705
31.....23705
71.....23705
91.....23705
107.....23705
115.....23705
126.....23705
175.....23705
176.....23705
189.....23705

47 CFR
0.....24054
1.....24576, 26235
2.....24576, 26239
15.....26239
64.....24583, 24585
68.....24587
73 .....24055, 24842, 24843, 24844, 25557
76 .....25865, 26235, 26245
101.....24576
Proposed Rules:
Ch. I.....25157
2.....24383
25.....24073
73.....24896

48 CFR
1831.....24345
6103.....25865
6104.....25868, 25870
6105.....25870
Proposed Rules:
12.....25786
14.....25786
15.....25786
19.....25786
32.....23740
33.....25786
52.....23740, 25786
53.....25786

252.....23741

49 CFR

1.....23661
8.....23661
10.....23666
107.....24055
171.....24690
172.....24690
173.....24690
175.....24690
176.....24690
178.....24690
190.....24055

Proposed Rules:

Ch. X.....24896
1121.....23742
1150.....23742

50 CFR

91.....24844
222.....24345
227.....24345, 24588
600.....23667
622.....23671
648.....25138
660 .....24355, 24845, 25872
670.....24058
679 .....24058, 25138, 26246

Proposed Rules:

17 .....24387, 24388, 24632
600.....23744, 24897
622.....25158
648.....24073

REMINDERS

The items in this list were editorially compiled as an aid to Federal Register users. Inclusion or exclusion from this list has no legal significance.

RULES GOING INTO EFFECT MAY 13, 1997

AGRICULTURE DEPARTMENT

Federal Crop Insurance Corporation

Crop insurance regulations:

Fresh market sweet corn

Correction; published 5-13-97

DEFENSE DEPARTMENT

Engineers Corps

Permits processing; editorial changes; published 5-13-97

ENERGY DEPARTMENT

Federal Energy Regulatory Commission

Electric utilities (Federal Power Act):

Open access non-discriminatory transmission services provided by public utilities—

Wholesale competition promotion; stranded costs recovery by public and transmitting utilities; published 3-14-97

Open access same-time information system (formerly real-time information networks) and standards of conduct for public utilities; published 3-14-97

HEALTH AND HUMAN SERVICES DEPARTMENT

Food and Drug Administration

Food additives:

1,3-butylene glycol; published 5-13-97

Medical devices:

Clinical investigators disqualification; published 3-14-97

Investigational device exemptions—

Export requirements for medical devices; technical amendment; published 5-13-97

NUCLEAR REGULATORY COMMISSION

Practice rules:

Domestic licensing procedures—

Informal small entity guidance; published 5-13-97

TRANSPORTATION DEPARTMENT

Federal Aviation Administration

Airworthiness directives:

McDonnell Douglas; published 4-8-97

COMMENTS DUE NEXT WEEK

AGRICULTURE DEPARTMENT

Agricultural Marketing Service

Onions grown in—

Texas; comments due by 5-23-97; published 4-23-97

AGRICULTURE DEPARTMENT

Federal Crop Insurance Corporation

Crop insurance regulations:

Macadamia nuts; comments due by 5-19-97; published 4-18-97

Macadamia trees; comments due by 5-19-97; published 4-18-97

Potatoes; comments due by 5-23-97; published 4-23-97

AGRICULTURE DEPARTMENT

Forest Service

National Forest System timber; disposal and sale:

Small business timber sales set-aside program; shares recomputation; appeal procedures; comments due by 5-23-97; published 3-24-97

AGRICULTURE DEPARTMENT

Farm Service Agency

Farm marketing quotas, acreage allotments, and production arrangements:

Tobacco; comments due by 5-20-97; published 3-21-97

AGRICULTURE DEPARTMENT

Rural Utilities Service

Electric loans:

Pre-loan policies and procedures—

Temporary loan processing procedures; comments due by 5-22-97; published 2-21-97

ARCHITECTURAL AND TRANSPORTATION BARRIERS COMPLIANCE BOARD

Americans with Disabilities Act; implementation:

Outdoor Developed Areas Accessibility Guidelines Regulatory Negotiation Committee—

Intent to establish; comments due by 5-19-97; published 4-18-97

COMMERCE DEPARTMENT

National Oceanic and Atmospheric Administration

Fishery conservation and management:

Magnuson Act provisions; comments due by 5-23-97; published 4-23-97

West Coast States and Western Pacific fisheries—

Pacific Coast groundfish; comments due by 5-22-97; published 5-7-97

Salmon off coasts of Washington, Oregon, and California; comments due by 5-19-97; published 4-3-97

ENERGY DEPARTMENT

Occupational radiation protection:

Guides and technical standards; availability; comments due by 5-23-97; published 4-24-97

ENVIRONMENTAL PROTECTION AGENCY

Air programs:

Locomotives and locomotive engines; reduction of nitrogen oxides emissions, oxides, etc.; standards; comments due by 5-19-97; published 3-11-97

Air quality implementation plans; approval and promulgation; various States:

California; comments due by 5-19-97; published 4-17-97

District of Columbia et al.; comments due by 5-23-97; published 4-23-97

Indiana; comments due by 5-19-97; published 4-18-97

Minnesota; comments due by 5-23-97; published 4-23-97

North Dakota; comments due by 5-21-97; published 4-21-97

Pennsylvania; comments due by 5-19-97; published 4-18-97

Pesticides; emergency exemptions, etc.:

Benomyl; comments due by 5-22-97; published 5-7-97

Pesticides; tolerances in food, animal feeds, and raw agricultural commodities:

Avermectin B1 and delta-8,9-isomer; comments due by 5-23-97; published 3-24-97

Bromoxynil; comments due by 5-19-97; published 5-2-97

Tebufenozide; comments due by 5-19-97; published 3-20-97

FEDERAL COMMUNICATIONS COMMISSION

Administrative practice and procedure:

Electronic filing of documents in rulemaking proceedings; comments due by 5-21-97; published 4-21-97

Common carrier services:

Toll free service access codes; comments due by 5-22-97; published 4-25-97

Radio stations; table of assignments:

Louisiana; comments due by 5-19-97; published 4-3-97

Minnesota; comments due by 5-19-97; published 4-3-97

Mississippi; comments due by 5-19-97; published 4-3-97

Texas; comments due by 5-19-97; published 4-3-97

Virginia; comments due by 5-19-97; published 4-3-97

Wyoming and Nebraska; comments due by 5-19-97; published 4-3-97

HEALTH AND HUMAN SERVICES DEPARTMENT

Food and Drug Administration

Electronic identification/signatures in place of handwritten signatures; comments due by 5-19-97; published 3-20-97

Food additives:

Adjuvants, production aids, and sanitizers—

C.I. Pigment Yellow 191; expanded safe use; comments due by 5-21-97; published 4-21-97

INTERIOR DEPARTMENT

Indian Affairs Bureau

Education:

Higher education grant program; clarification; comments due by 5-20-97; published 2-19-97

JUSTICE DEPARTMENT

Immigration and Naturalization Service

Immigration:

Educational requirements for naturalization—

Exceptions due to physical or

developmental disability or mental impairment; comments due by 5-19-97; published 3-19-97

LABOR DEPARTMENT

Employment Standards Administration

Federal Coal Mine Health and Safety Act of 1969, as amended:

Black Lung Benefits Act—

Individual claims by former coal miners and dependents processing and adjudication; regulations clarification and simplification; comments due by 5-23-97; published 2-24-97

LABOR DEPARTMENT

Pension and Welfare Benefits Administration

Employee Retirement Income Security Act:

Civil monetary penalties; inflation adjustment; comments due by 5-19-97; published 4-18-97

LEGAL SERVICES CORPORATION

Aliens; legal assistance restrictions; comments due by 5-21-97; published 4-21-97

PENSION BENEFIT GUARANTY CORPORATION

Single-employer plans:

Allocation of assets—

Mortality tables; comments due by 5-19-97; published 3-19-97

PERSONNEL MANAGEMENT OFFICE

Allowances and differentials:

Cost-of-living allowances (nonforeign areas); comments due by 5-19-97; published 3-20-97

TRANSPORTATION DEPARTMENT

Coast Guard

Boating safety:

Recreational boats; hull identification numbers; comments due by 5-22-97; published 2-21-97

Regattas and marine parades:

First Coast Guard District fireworks displays; comments due by 5-21-97; published 4-21-97

TRANSPORTATION DEPARTMENT

Federal Aviation Administration

Air traffic operating and flight rules:

Airport security areas, unescorted access privileges; employment history, verification, and criminal history records check; comments due by 5-19-97; published 3-19-97

Airworthiness directives:

de Havilland; comments due by 5-23-97; published 4-15-97

Airbus Industrie; comments due by 5-19-97; published 4-9-97

AlliedSignal Inc.; comments due by 5-19-97; published 3-18-97

Boeing; comments due by 5-22-97; published 4-14-97

Bombardier; comments due by 5-23-97; published 4-15-97

Dornier; comments due by 5-19-97; published 4-9-97

Pratt & Whitney; comments due by 5-19-97; published 3-19-97

Saab; comments due by 5-19-97; published 4-9-97

Class E airspace; comments due by 5-22-97; published 3-11-97

Class E airspace; comments due by 5-19-97; published 4-8-97

Commercial launch vehicles; licensing regulations; comments due by 5-19-97; published 3-19-97

TRANSPORTATION DEPARTMENT

National Highway Traffic Safety Administration

Motor vehicle safety standards:

Child restraint systems—

Tether anchorages and anchorage system; comments due by 5-21-97; published 2-20-97

TREASURY DEPARTMENT

Alcohol, Tobacco and Firearms Bureau

Alcohol; viticultural area designations:

Mendocino Ridge, CA; comments due by 5-22-97; published 4-7-97

TREASURY DEPARTMENT

Internal Revenue Service

Estate and gift taxes:

Marital deduction; cross reference; comments due by 5-19-97; published 2-18-97

FEDERAL REGISTER WORKSHOP

THE FEDERAL REGISTER: WHAT IT IS AND HOW TO USE IT

FOR: Any person who uses the Federal Register and Code of Federal Regulations.

WHO: Sponsored by the Office of the Federal Register.

WHAT: Free public briefings (approximately 3 hours) to present:

1. The regulatory process, with a focus on the Federal Register system and the public's role in the development of regulations.
2. The relationship between the Federal Register and Code of Federal Regulations.
3. The important elements of typical Federal Register documents.
4. An introduction to the finding aids of the FR/CFR system.

WHY: To provide the public with access to information necessary to research Federal agency regulations which directly affect them. There will be no discussion of specific agency regulations.

Long Beach, CA

WHEN: May 20, 1997 at 9:00 am to 12:00 noon

WHERE: Glenn M. Anderson Federal Building
501 W. Ocean Blvd.
Conference Room 3470
Long Beach, CA 90802

San Francisco, CA

WHEN: May 21, 1997 at 9:00 am to 12:00 noon

WHERE: Phillip Burton Federal Building and Courthouse
450 Golden Gate Avenue
San Francisco, CA 94102

Anchorage, AK

WHEN: May 23, 1997 at 9:00 am to 12:00 noon

WHERE: Federal Building and U.S. Courthouse
222 West 7th Avenue
Executive Dining Room (Inside Cafeteria)
Anchorage, AK 99513

RESERVATIONS: For Long Beach, San Francisco, and Anchorage workshops please call Federal Information Center
1-800-688-9889 x 0