4–21–97
Vol. 62 No. 76
Pages 19219–19472

# federal register

Monday
April 21, 1997

**Briefings on how to use the Federal Register**
For information on briefings in Kansas City and Independence, MO, Long Beach and San Francisco, CA, and Anchorage, AK, see the inside cover of this issue.

**Now Available Online**

***Code of Federal Regulations***

***via***

***GPO Access***

*(Selected Volumes)*

Free, easy, online access to selected *Code of Federal Regulations (CFR)* volumes is now available via *GPO Access*, a service of the United States Government Printing Office (GPO). *CFR* titles will be added to *GPO Access* incrementally throughout calendar years 1996 and 1997 until a complete set is available. GPO is taking steps so that the online and printed versions of the *CFR* will be released concurrently.

The *CFR* and *Federal Register* on *GPO Access*, are the official online editions authorized by the Administrative Committee of the Federal Register.

New titles and/or volumes will be added to this online service as they become available.

http://www.access.gpo.gov/nara/cfr

For additional information on ***GPO Access*** products, services and access methods, see page II or contact the *GPO Access* User Support Team via:

★ Phone: toll-free: 1-888-293-6498

★ Email: gpoaccess@gpo.gov

**FEDERAL REGISTER** Published daily, Monday through Friday, (not published on Saturdays, Sundays, or on official holidays), by the Office of the Federal Register, National Archives and Records Administration, Washington, DC 20408, under the Federal Register Act (49 Stat. 500, as amended; 44 U.S.C. Ch. 15) and the regulations of the Administrative Committee of the Federal Register (1 CFR Ch. I). Distribution is made only by the Superintendent of Documents, U.S. Government Printing Office, Washington, DC 20402.

**The Federal Register** provides a uniform system for making available to the public regulations and legal notices issued by Federal agencies. These include Presidential proclamations and Executive Orders and Federal agency documents having general applicability and legal effect, documents required to be published by act of Congress and other Federal agency documents of public interest. Documents are on file for public inspection in the Office of the Federal Register the day before they are published, unless earlier filing is requested by the issuing agency.

**The seal of the National Archives and Records Administration authenticates this issue of the Federal Register** as the official serial publication established under the Federal Register Act. 44 U.S.C. 1507 provides that the contents of the **Federal Register** shall be judicially noticed.

**The Federal Register** is published in paper, 24x microfiche and as an online database through *GPO Access*, a service of the U.S. Government Printing Office. The online edition of the **Federal Register** on *GPO Access* is issued under the authority of the Administrative Committee of the Federal Register as the official legal equivalent of the paper and microfiche editions. The online database is updated by 6 a.m. each day the **Federal Register** is published. The database includes both text and graphics from Volume 59, Number 1 (January 2, 1994) forward. Free public access is available on a Wide Area Information Server (WAIS) through the Internet and via asynchronous dial-in. Internet users can access the database by using the World Wide Web; the Superintendent of Documents home page address is http://www.access.gpo.gov/su__docs/, by using local WAIS client software, or by telnet to swais.access.gpo.gov, then login as guest, (no password required). Dial-in users should use communications software and modem to call (202) 512–1661; type swais, then login as guest (no password required). For general information about *GPO Access*, contact the *GPO Access* User Support Team by sending Internet e-mail to gpoaccess@gpo.gov; by faxing to (202) 512–1262; or by calling toll free 1–888–293–6498 or (202) 512–1530 between 7 a.m. and 5 p.m. Eastern time, Monday–Friday, except for Federal holidays.

The annual subscription price for the **Federal Register** paper edition is $555, or $607 for a combined **Federal Register**, Federal Register Index and List of CFR Sections Affected (LSA) subscription; the microfiche edition of the **Federal Register** including the Federal Register Index and LSA is $220. Six month subscriptions are available for one-half the annual rate. The charge for individual copies in paper form is $8.00 for each issue, or $8.00 for each group of pages as actually bound; or $1.50 for each issue in microfiche form. All prices include regular domestic postage and handling. International customers please add 25% for foreign handling. Remit check or money order, made payable to the Superintendent of Documents, or charge to your GPO Deposit Account, VISA or MasterCard. Mail to: New Orders, Superintendent of Documents, P.O. Box 371954, Pittsburgh, PA 15250–7954.

There are no restrictions on the republication of material appearing in the **Federal Register.**

**How To Cite This Publication:** Use the volume number and the page number. Example: 60 FR 12345.

## SUBSCRIPTIONS AND COPIES

| | |
|---|---|
| **PUBLIC** | |
| **Subscriptions:** | |
| Paper or fiche | **202–512–1800** |
| Assistance with public subscriptions | **512–1806** |
| **General online information** | **202–512–1530; 1–888–293–6498** |
| **Single copies/back copies:** | |
| Paper or fiche | **512–1800** |
| Assistance with public single copies | **512–1803** |
| **FEDERAL AGENCIES** | |
| **Subscriptions:** | |
| Paper or fiche | **523–5243** |
| Assistance with Federal agency subscriptions | **523–5243** |

**For other telephone numbers, see the Reader Aids section at the end of this issue.**

**FEDERAL REGISTER WORKSHOP**

### THE FEDERAL REGISTER: WHAT IT IS AND HOW TO USE IT

**FOR:** Any person who uses the Federal Register and Code of Federal Regulations.

**WHO:** Sponsored by the Office of the Federal Register.

**WHAT:** Free public briefings (approximately 3 hours) to present:

1. The regulatory process, with a focus on the Federal Register system and the public's role in the development of regulations.
2. The relationship between the Federal Register and Code of Federal Regulations.
3. The important elements of typical Federal Register documents.
4. An introduction to the finding aids of the FR/CFR system.

**WHY:** To provide the public with access to information necessary to research Federal agency regulations which directly affect them. There will be no discussion of specific agency regulations.

#### Kansas City—Independence, MO

**WHEN:** May 6, 1997 at 9:00 am to 12:00 noon
**WHERE:** Harry S. Truman Library
Whistle Stop Room
U.S. Highway 24 and Delaware Street
Independence, MO 64050

#### Long Beach, CA

**WHEN:** May 20, 1997 at 9:00 am to 12:00 noon
**WHERE:** Glenn M. Anderson Federal Building
501 W. Ocean Blvd.
Conference Room 3470
Long Beach, CA 90802

#### San Francisco, CA

**WHEN:** May 21, 1997 at 9:00 am to 12:00 noon
**WHERE:** Phillip Burton Federal Building and Courthouse
450 Golden Gate Avenue
San Francisco, CA 94102

#### Anchorage, AK

**WHEN:** May 23, 1997 at 9:00 am to 12:00 noon
**WHERE:** Federal Building and U.S. Courthouse
222 West 7th Avenue
Executive Dining Room (Inside Cafeteria)
Anchorage, AK 99513

**RESERVATIONS:** For Kansas City, Long Beach, San Francisco and Anchorage workshops please call
Federal Information Center
1-800-688-9889 x 0

Printed on recycled paper containing 100% post consumer waste

# Contents

**Federal Register**

Vol. 62, No. 76

Monday, April 21, 1997

**Agricultural Marketing Service**
NOTICES
Fresh cut flowers and fresh cut greens promotion and information order; referendum, 19301–19302

**Agriculture Department**
*See* Agricultural Marketing Service
*See* Farm Service Agency
*See* Forest Service
*See* Grain Inspection, Packers and Stockyards Administration
*See* Natural Resources Conservation Service
*See* Rural Business-Cooperative Service
*See* Rural Housing Service
*See* Rural Utilities Service
NOTICES
Agency information collection activities:
Submission for OMB review; comment request, 19300
Digital signature standard; Federal information processing standard waiver, 19300–19301

**Alcohol, Tobacco and Firearms Bureau**
RULES
Alcohol, tobacco, and other excise taxes:
Persons acquiring firearms; residency requirements, 19442–19445
PROPOSED RULES
Alcohol, tobacco, and other excise taxes:
Persons acquiring firearms; residency requirements; cross reference, 19446–19447

**Army Department**
NOTICES
Patent licenses; non-exclusive, exclusive, or partially exclusive:
Recombinant F1-V plague vaccine, 19314

**Arts and Humanities, National Foundation**
*See* National Foundation on the Arts and the Humanities

**Centers for Disease Control and Prevention**
NOTICES
Carbonless copy paper toxicity; comment request, 19323

**Civil Rights Commission**
NOTICES
Meetings; State advisory committees:
Nebraska, 19309

**Coast Guard**
RULES
Drawbridge operations:
Maryland, 19222–19223
Vessel inspections:
User fees; reductions and exemptions, 19229–19233
PROPOSED RULES
Drawbridge operations:
Maryland, 19245–19246
New Jersey, 19243–19245
Regattas and marine parades:
Assateague Channel, VA; marine events, 19239–19240
First Coast Guard District fireworks displays, 19240–19243

**Commerce Department**
*See* International Trade Administration
*See* National Oceanic and Atmospheric Administration

**Commodity Futures Trading Commission**
NOTICES
Meetings; Sunshine Act, 19311–19312

**Defense Department**
*See* Army Department
PROPOSED RULES
Federal Acquisition Regulation (FAR):
Subcontract consent, 19465–19468
NOTICES
Federal Acquisition Regulation (FAR):
Agency information collection activities—
Proposed collection; comment request, 19312–19314, 19464

**Education Department**
NOTICES
Agency information collection activities:
Proposed collection; comment request, 19314–19315
Grants and cooperative agreements; availability, etc.:
National Institute on Disability and Rehabilitation Research—
Rehabilitation research and training center program and knowledge dissemination and utilization program, 19432–19439

**Employment Standards Administration**
NOTICES
Agency information collection activities:
Proposed collection; comment request, 19356–19357

**Energy Department**
*See* Federal Energy Regulatory Commission

**Environmental Protection Agency**
RULES
Air quality implementation plans; approval and promulgation; various States:
North Dakota, 19224–19229
PROPOSED RULES
Air quality implementation plans; approval and promulgation; various States:
North Dakota, 19246–19247
NOTICES
Meetings:
Science Advisory Board, 19320–19321
State FIFRA Issues Research and Evaluation Group, 19321
Superfund; response and remedial actions, proposed settlements, etc.:
Enviropur West Corp. Removal Site, CA, 19321–19322

**Executive Office of the President**
*See* Presidential Documents

**Farm Credit Administration**
RULES
Farm credit system:
Capital adequacy and customer eligibility
Correction, 19219

**Farm Service Agency**
NOTICES
Agency information collection activities:
Proposed collection; comment request; correction, 19394
Environmental statements; availability, etc.:
Boll weevil eradication loan program, 19302–19307

**Federal Aviation Administration**
PROPOSED RULES
Class E airspace, 19238–19239
NOTICES
Exemption petitions; summary and disposition, 19386–19387
Meetings:
Aviation Rulemaking Advisory Committee, 19387–19388

**Federal Communications Commission**
PROPOSED RULES
Administrative practice and procedure:
Electronic filing of documents in rulemaking proceedings, 19247–19252

**Federal Energy Regulatory Commission**
NOTICES
Environmental statements; availability, etc.:
Lace River Hydro; correction, 19319
*Applications, hearings, determinations, etc.:*
ANR Pipeline Co., 19315–19316
Columbia Energy Services Corp., 19316
Eastern Shore Natural Gas Co., 19316
Florida Gas Transmission Co., 19316–19317
Koch Gateway Pipeline Co., 19317
National Fuel Gas Supply Corp., 19317–19318
Northern Natural Gas Co., 19318
Power Marketing Coal Services, Inc., 19318
Questar Pipeline Co., 19318–19319
Texas-Ohio Pipeline, Inc., 19319
Transwestern Pipeline Co., 19319

**Federal Highway Administration**
PROPOSED RULES
Motor carrier safety standards:
Parts and accessories necessary for safe operation—
Shifting or falling cargo, protection; North American standard development; meeting, 19252–19253
NOTICES
Environmental statements; notice of intent:
San Francisco and Alameda Counties, CA, 19388

**Federal Railroad Administration**
RULES
Railroad workplace safety:
Roadway worker protection; reconsideration petitions, 19234–19237
NOTICES
Meetings:
Maglev Study Advisory Committee, 19388–19389

**Federal Reserve System**
NOTICES
Banks and bank holding companies:
Change in bank control, 19322
Permissible nonbanking activities, 19322

**Food and Drug Administration**
RULES
Food additives:
Adjuvants, production aids, and sanitizers—
C.I. Pigment Yellow 191; expanded safe use, 19220–19221
NOTICES
Agency information collection activities:
Submission for OMB review; comment request, 19323–19324
Human drugs:
Patent extension; regulatory review period determinations—
MENTAX, 19324–19325
Meetings:
Arthritis Advisory Committee, 19325–19326

**Forest Service**
NOTICES
Environmental statements; notice of intent:
Chugach National Forest, AK, 19307–19308
National Forest System lands:
Noxious weeds spread prevention; certified forage use, MT; correction, 19394

**General Services Administration**
PROPOSED RULES
Federal Acquisition Regulation (FAR):
Subcontract consent, 19465–19468
NOTICES
Environmental statements; notice of intent:
Northern Virginia; consolidated Patent and Trademark Office; construction and operation, 19322–19323
Federal Acquisition Regulation (FAR):
Agency information collection activities—
Proposed collection; comment request, 19312–19314, 19464

**Grain Inspection, Packers and Stockyards Administration**
NOTICES
Agency information collection activities:
Proposed collection; comment request, 19308–19309

**Health and Human Services Department**
*See* Centers for Disease Control and Prevention
*See* Food and Drug Administration
*See* Health Care Financing Administration
*See* Indian Health Service
*See* Inspector General Office, Health and Human Services Department
*See* National Institutes of Health
*See* Public Health Service
*See* Substance Abuse and Mental Health Services Administration

**Health Care Financing Administration**
*See* Inspector General Office, Health and Human Services Department
NOTICES
Medicare and Medicaid:
Organ procurement organizations (OPOs) in designated areas; hospitals requesting waivers; list, 19326–19328
Program issuances and coverage decisions; quarterly listing, 19328–19337

**Indian Health Service**
NOTICES
Grants and cooperative agreements; availability, etc.:
Indian child protection and child abuse prevention demonstration projects, 19337–19340

**Inspector General Office, Health and Human Services Department**
NOTICES
Program exclusions; list, 19340–19344

**Interior Department**
*See* Land Management Bureau
*See* Minerals Management Service
*See* National Park Service
*See* Surface Mining Reclamation and Enforcement Office

**International Trade Administration**
NOTICES
Antidumping:
Oil country tubular goods from—
Mexico, 19309–19311

**International Trade Commission**
NOTICES
Import investigations:
Flash memory circuits and products containing same, 19353–19354

**Justice Department**
*See* Justice Programs Office
*See* Prisons Bureau
NOTICES
Pollution control; consent judgments:
Smith Corona Corp. et al., 19354–19355

**Justice Programs Office**
NOTICES
Grants and cooperative agreements; availability, etc.:
Law enforcement family support: stress reduction among law enforcement officers and their families; demonstration and training programs, 19355
Violence against women; research and evaluation, 19355–19356
Violence Against Women Act; arrest policies program evaluation, 19356

**Labor Department**
*See* Employment Standards Administration

**Land Management Bureau**
PROPOSED RULES
Land resource management:
Management, use, and protection of public lands—
Criminal law enforcement provisions; consolidation; withdrawn, 19247
NOTICES
Environmental statements; notice of intent:
Glenwood Springs Resource Area, CO; oil and gas development, 19349–19350
Realty actions; sales, leases, etc.:
Nevada, 19350
Recreation management restrictions, etc.:
Yakima River Canyon, WA; Roza and Squaw Creek recreation sites; user fees, 19350–19351
Survey plat filings:
Idaho, 19351

**Legal Services Corporation**
RULES
Aliens; legal assistance restrictions, 19410–19418
Fee-generating cases, 19399–19401
Fund recipients:
Application of Federal law, 19425–19427
Lobbying and certain other activities; restrictions, 19401–19407
Non LSC funds use:
Client identity and statement of facts, 19420–19422
Priorities in use of resources, 19407–19410
Prisoners representation, 19422–19424
Solicitation restriction, 19424–19425
Subgrants, fees, and dues:
Prohibition of use of funds to pay membership dues to private or nonprofit organization, 19418–19420

**Minerals Management Service**
NOTICES
Agency information collection activities:
Proposed collection; comment request, 19351–19352

**National Aeronautics and Space Administration**
PROPOSED RULES
Federal Acquisition Regulation (FAR):
Subcontract consent, 19465–19468
NOTICES
Federal Acquisition Regulation (FAR):
Agency information collection activities—
Proposed collection; comment request, 19312–19314, 19464

**National Foundation on the Arts and the Humanities**
NOTICES
Meetings; Sunshine Act, 19357–19358

**National Highway Traffic Safety Administration**
PROPOSED RULES
Motor vehicle safety standards:
Metric conversion; weights and measures system, 19253–19296

**National Institutes of Health**
NOTICES
Meetings:
National Cancer Institute, 19344–19345
National Heart, Lung, and Blood Institute, 19345
National Institute of Allergy and Infectious Diseases, 19346
National Institute of Child Health and Human Development, 19345
National Institute of Mental Health, 19346–19347
National Library of Medicine, 19347
Research Grants Division special emphasis panels, 19347–19348

**National Oceanic and Atmospheric Administration**
RULES
Fishery conservation and management:
Alaska; fisheries of Exclusive Economic Zone—
Shortraker/rougheye rockfish; correction, 19394
PROPOSED RULES
Fishery conservation and management:
Atlantic highly migratory species fisheries—
Atlantic bluefin tuna, 19296–19299

**National Park Service**
NOTICES
Meetings:
National Park Systems Advisory Board, 19352

**National Science Foundation**
NOTICES
Agency information collection activities:
Proposed collection; comment request, 19358

**Natural Resources Conservation Service**
NOTICES
Watershed projects; reauthorization of funds:
Dunloup Creek Watershed, WV; correction, 19394

**Nuclear Regulatory Commission**
NOTICES
*Applications, hearings, determinations, etc.:*
Houston Lighting & Power Co. et al., 19358–19359

**Postal Service**
RULES
International Mail Manual:
Global Package Link (GPL) service—
Catalog harmonization charges, 19223–19224

**Presidential Documents**
PROCLAMATIONS
*Special observances:*
Education and Sharing Day, U.S.A. (Proc. 6990), 19471

**Prisons Bureau**
PROPOSED RULES
Inmate control, custody, care, etc.:
Classification and program review; team meetings, 19430

**Public Health Service**
*See* Centers for Disease Control and Prevention
*See* Food and Drug Administration
*See* Indian Health Service
*See* National Institutes of Health
*See* Substance Abuse and Mental Health Services Administration
NOTICES
National toxicology program:
Toxicology and carcinogenesis studies—
Bromodichloroacetic acid, etc., 19348–19349

**Railroad Retirement Board**
RULES
Debt Collection Improvement Act of 1996:
Collection of debts by offset against Federal payments, 19219–19220

**Research and Special Programs Administration**
NOTICES
Meetings:
Mechanical damage and cracking in pipelines; detection, 19389–19390

**Rural Business-Cooperative Service**
NOTICES
Agency information collection activities:
Proposed collection; comment request; correction, 19394

**Rural Housing Service**
NOTICES
Agency information collection activities:
Proposed collection; comment request; correction, 19394

**Rural Utilities Service**
NOTICES
Agency information collection activities:
Proposed collection; comment request; correction, 19394

**Securities and Exchange Commission**
NOTICES
Self-regulatory organizations; proposed rule changes:
Chicago Board Options Exchange, Inc., 19363–19369
National Association of Securities Dealers, Inc., 19369–19383
Philadelphia Stock Exchange, Inc., 19383–19385
*Applications, hearings, determinations, etc.:*
Merrill Lynch Asset Management, L.P., et al., 19359–19362
Safeway Inc., 19362

**State Department**
NOTICES
Meetings:
Overseas Security Advisory Council, 19385

**Substance Abuse and Mental Health Services Administration**
NOTICES
Grant and cooperative agreement awards:
Women and children's residential treatment program grantees, 19349

**Surface Mining Reclamation and Enforcement Office**
RULES
Permanent program and abandoned mine land reclamation plan submissions:
Iowa; correction, 19394
Texas; correction, 19394–19395
Surface coal mining and reclamation operations:
Ownership and control, permit application process, and improvidently issued permits, 19450–19461

**Surface Transportation Board**
NOTICES
Railroad operation, acquisition, construction, etc.:
Canadian Pacific Railway, 19390
CSX Corp. et al., 19390–19393

**Tennessee Valley Authority**
NOTICES
Meetings; Sunshine Act, 19385

**Transportation Department**
*See* Coast Guard
*See* Federal Aviation Administration
*See* Federal Highway Administration
*See* Federal Railroad Administration
*See* National Highway Traffic Safety Administration
*See* Research and Special Programs Administration
*See* Surface Transportation Board
RULES
Equal Access to Justice Act; implementation; Federal regulatory reform, 19233–19234
NOTICES
Global positioning system (GPS) modernization; planning for future; comment request, 19386

**Treasury Department**
*See* Alcohol, Tobacco and Firearms Bureau

**United States Information Agency**
**RULES**
Exchange visitor program:
Two-year return home requirement; waiver requests by interested U.S. Government agencies, 19221–19222

## Separate Parts In This Issue

**Part II**
Legal Services Corporation, 19399–19427

**Part III**
Department of Justice; Bureau of Prisons, 19430

**Part IV**
Department of Education, 19432–19439

**Part V**
Department of Treasury; Alcohol, Tobacco and Firearms Bureau 19442–19447

**Part VI**
Department of Interior; Surface Mining Reclamation and Enforcement Office, 19450–19461

**Part VII**
General Services Administration; Department of Defense; National Aeronautics and Space Administration, 19464–19468

**Part VIII**
The President, 19471

## Reader Aids

Additional information, including a list of public laws, telephone numbers, reminders, and finding aids, appears in the Reader Aids section at the end of this issue.

## Electronic Bulletin Board

Free **Electronic Bulletin Board** service for Public Law numbers, **Federal Register** finding aids, and a list of documents on public inspection is available on 202–275–1538 or 275–0920.

## CFR PARTS AFFECTED IN THIS ISSUE

A cumulative list of the parts affected this month can be found in the Reader Aids section at the end of this issue.


**3 CFR**
**Proclamations:**
6990 ..... 19471

**12 CFR**
614 ..... 19219

**14 CFR**
**Proposed Rules:**
71 ..... 19238

**20 CFR**
367 ..... 19219

**21 CFR**
178 ..... 19220

**22 CFR**
514 ..... 19221

**27 CFR**
178 ..... 19442
**Proposed Rules:**
178 ..... 19442

**28 CFR**
**Proposed Rules:**
524 ..... 19430

**30 CFR**
773 ..... 19450
778 ..... 19450
843 ..... 19450
915 ..... 19394
943 ..... 19394

**33 CFR**
117 ..... 19222
**Proposed Rules:**
100 (2 documents) ..... 19239, 19240
117 (2 documents) ..... 19243, 19245

**39 CFR**
20 ..... 19223

**40 CFR**
52 ..... 19224
**Proposed Rules:**
52 ..... 19246

**43 CFR**
**Proposed Rules:**
2800 ..... 19247
2920 ..... 19247
4100 ..... 19247
4300 ..... 19247
4700 ..... 19247
5460 ..... 19247
5510 ..... 19247
8200 ..... 19247
8340 ..... 19247
8350 ..... 19247
8360 ..... 19247
8370 ..... 19247
8560 ..... 19247
9210 ..... 19247
9260 ..... 19247

**45 CFR**
1609 ..... 19399
1612 ..... 19399
1620 ..... 19399
1626 ..... 19399
1627 ..... 19399
1636 ..... 19399
1637 ..... 19399
1638 ..... 19399
1640 ..... 19399

**46 CFR**
2 ..... 19229

**47 CFR**
**Proposed Rules:**
0 ..... 19247
1 ..... 19247

**48 CFR**
**Proposed Rules:**
4 ..... 19465
22 ..... 19465
35 ..... 19465
36 ..... 19465
44 ..... 19465
52 ..... 19465

**49 CFR**
6 ..... 19233
214 ..... 19234
**Proposed Rules:**
393 ..... 19252
571 ..... 19253

**50 CFR**
679 ..... 19394
**Proposed Rules:**
630 ..... 19296

# Rules and Regulations

Federal Register
Vol. 62, No. 76
Monday, April 21, 1997

This section of the FEDERAL REGISTER contains regulatory documents having general applicability and legal effect, most of which are keyed to and codified in the Code of Federal Regulations, which is published under 50 titles pursuant to 44 U.S.C. 1510.

The Code of Federal Regulations is sold by the Superintendent of Documents. Prices of new books are listed in the first FEDERAL REGISTER issue of each week.

## FARM CREDIT ADMINISTRATION

### 12 CFR Part 615

**RIN 3052–AB10**

### Eligibility and Scope of Financing; Loan Policies and Operations; Funding and Fiscal Affairs, Loan Policies and Operations, and Funding Affairs; General Provisions; Definitions; Disclosure to Shareholders; Nondiscrimination in Lending; Capital Adequacy and Customer Eligibility; Correction

**AGENCY:** Farm Credit Administration.

**ACTION:** Correcting amendment.

**SUMMARY:** The Farm Credit Administration (FCA) published a final rule (62 FR 4429, January 30, 1997) that amended the regulations which govern the capital adequacy provisions and the customer eligibility provisions for Farm Credit System institutions. This document corrects a typographical error in the final rule.

**EFFECTIVE DATE:** March 11, 1997.

**FOR FURTHER INFORMATION CONTACT:** Cindy R. Nicholson, Paralegal Specialist, Office of Policy Development and Risk Control, Farm Credit Administration, McLean, VA 22102–5090, (703) 883–4498, TDD (703) 883–4444.

**SUPPLEMENTARY INFORMATION:** In preparing the final rule for publication in the **Federal Register**, a typographical error was inadvertently made in the § 615.5301(b)(2).

### List of Subjects

*12 CFR Part 613*

Agriculture, Banks, Banking, Credit, Rural areas.

*12 CFR Part 614*

Agriculture, Banks, Banking, Flood insurance, Foreign trade, Reporting and recordkeeping requirements, Rural areas.

*12 CFR Part 615*

Accounting, Agriculture, Banks, Banking, Government securities, Investments, Rural areas.

*12 CFR Part 618*

Agriculture, Archives and records, Banks, Banking, Insurance, Reporting and recordkeeping requirements, Rural areas, Technical assistance.

*12 CFR Part 619*

Agriculture, Banks, Banking, Rural areas.

*12 CFR Part 620*

Accounting, Agriculture, Banks, Banking, Reporting and recordkeeping requirements, Rural areas.

*12 CFR Part 626*

Advertising, Aged, Agriculture, Banks, Banking, Civil rights, Credit, Fair housing, Marital status discrimination, Sex discrimination, Signs and symbols.

Accordingly, 12 CFR part 615 is corrected by making the following correcting amendment:

### PART 615—FUNDING AND FISCAL AFFAIRS, LOAN POLICIES AND OPERATIONS; AND FUNDING OPERATIONS

1. The authority citation for part 615 continues to read as follows:

**Authority:** Secs. 1.5, 1.7, 1.10, 1.11, 1.12, 2.2, 2.3, 2.4, 2.5, 2.12, 3.1, 3.7, 3.11, 3.25, 4.3, 4.3A, 4.9, 4.14B, 4.25, 5.9, 5.17, 6.20, 6.26, 8.3, 8.0, 8.4, 8.6, 8.7, 8.8, 8.10, 8.12 of the Farm Credit Act (12 U.S.C. 2013, 2015, 2018, 2019, 2020, 2073, 2074, 2075, 2076, 2093, 2122, 2128, 2132, 2146, 2154, 2154a, 2160, 2202b, 2211, 2243, 2252, 2278b, 2278b-6, 2279aa, 2279aa-3, 2279aa-4, 2279aa-6, 2279aa-7, 2279aa-8, 2279aa-10, 2279aa-12); sec. 301(a) of Pub. L. 100–233, 101 Stat. 1568, 1608.

### Subpart K—Surplus and Collateral Requirements

**§ 615.5301 [Corrected]**

2. On page 4447, second column, paragraph (b)(2) of § 615.5301 is corrected by removing the reference ''§ 615.5330(b)(3)'' and adding in its place, the reference ''§ 615.5330(b)''.

Dated: April 15, 1997.

**Floyd Fithian,**

*Secretary, Farm Credit Administration Board.*

[FR Doc. 97–10172 Filed 4–18–97; 8:45 am]

BILLING CODE 6705–01–P

## RAILROAD RETIREMENT BOARD

### 20 CFR Part 367

**RIN 3220–AB26**

### Collection of Debts

**AGENCY:** Railroad Retirement Board.

**ACTION:** Interim final rule.

**SUMMARY:** The Railroad Retirement Board (Board) amends its regulations pertaining to the collection of debts by offset against Federal payments to reflect amendments to section 3716 of Title 31 by the Debt Collection Improvement Act of 1996 (Pub. L. 104–134).

**DATES:** *Effective Date:* This regulation will be effective April 21, 1997.

*Comment Date:* Comments due on or before June 20, 1997.

**ADDRESSES:** Comments may be mailed to the Secretary to the Board, Railroad Retirement Board, 844 North Rush Street, Chicago, Illinois 60611.

**FOR FURTHER INFORMATION CONTACT:** Ann L. Chaney, General Attorney, Bureau of Law, Railroad Retirement Board, 844 North Rush Street, Chicago, Illinois 60611, (312) 751–7131, TDD (312) 751–4701.

**SUPPLEMENTARY INFORMATION:** Part 367 of the Board's regulations provides for the collection of debts by administrative offset under the authority of the Debt Collection Act of 1982, 31 U.S.C. 3716. The Debt Collection Improvement Act of 1996 (Pub. L. 104-134) amended 31 U.S.C. 3716 to provide for referral of delinquent Federal nontax debts to the Department of Treasury for administrative offset (''Treasury Offset Program''), and to provide for the mandatory referral of such debts over 180 days delinquent to the Treasury Offset Program, subject to certain exceptions. Accordingly, the Board amends this part to implement the provisions of Pub. L. 104–134.

Section 367.1 is revised to cite the authority of Pub. L. 104–134 and its provision for the referral of delinquent Federal nontax debts to the Treasury Offset Program.

Section 367.2 is amended to provide that only nontax debts will be referred to the Treasury Offset Program, and that a debt will not be referred if the Board's records show that foreclosure is pending on collateral securing the debt or if the debt has been referred to the Department of Justice or is otherwise in litigation with the Board.

Section 367.3 is amended to provide that the Board shall refer nontax debts over 180 days delinquent to the Treasury Offset Program and that in cases of mandatory referral of delinquent debt, unless otherwise directed by the Secretary of Treasury, the Board is not required to determine whether administrative offset is feasible, allowable, and appropriate.

Because all Federal agencies must comply with the Debt Collection Improvement Act of 1996, the Board is publishing this rule as an interim final rule rather than as a proposed rule. However, any person wishing to comment on this rule may do so within 60 days of the date of this publication in the **Federal Register**.

The Board, with the concurrence of the Office of Management and Budget, has determined that this is not a significant regulatory action under Executive Order 12866. Therefore, no regulatory impact analysis is required. There are no new information collections associated with this rule.

**List of Subjects in 20 CFR Part 367**

Railroad employees, Railroad retirement, Railroad unemployment insurance.

For the reasons set out in the preamble, part 367 of title 20, chapter II of the Code of Federal Regulations is amended as follows:

## PART 367—RECOVERY OF DEBTS OWED TO THE UNITED STATES GOVERNMENT BY ADMINISTRATIVE OFFSET

1. The authority citation for part 367 continues to read as follows:

**Authority:** 45 U.S.C. 231f(b)(5); 31 U.S.C. 3716.

2. Section 367.1 is revised to read as follows:

### § 367.1 Purpose and scope.

The regulations in this part establish procedures to implement the Debt Collection Act of 1982 (Pub. L. 97–365), as amended by the Debt Collection Improvement Act of 1996 (Pub. L. 104–134), 31 U.S.C. 3716. The statute authorizes the Board to collect a claim arising under an agency program by means of administrative offset, and requires the Board to refer nontax debts over 180 days delinquent to the Department of Treasury for administrative offset (the ''Treasury Offset Program''). No claim may be collected by such means if outstanding for more than 10 years after the Board's right to collection of the debt first accrued, unless facts material to the Government's right to collect the debt were not known and could not reasonably have been known by the official or officials of the government who were charged with the responsibility to discover and collect such debts. This part specifies the agency procedures that will be followed by the Board for referral and collection by administrative offset.

3. Section 367.2 is amended by revising paragraph (a), the introductory text of paragraph (f), paragraphs (f)(2) and (j), and by adding new paragraphs (f)(3) and (k) to read as follows:

### § 367.2 Past-due legally enforceable debt.

* * * * *

(a) Which arose under any statute administered by the Board or under any contract; and with respect to debts referred to the Department of Treasury, is a nontax debt;

* * * * *

(f) With respect to which:

* * * * *

(2) The Board can clearly establish at the time of the referral that the automatic stay under section 362 of the Bankruptcy Code has been lifted or is no longer in effect with respect to the debtor (or, if an individual, his or her spouse) and the debt was not discharged in the bankruptcy proceeding; or

(3) The Board's records do not contain evidence that foreclosure is pending on collateral securing the debt.

* * * * *

(j) With respect to which the Board has given the debtor at least 60 days from the date of the notification required in paragraph (i) of this section to present evidence that all or part of the debt is not past due or legally enforceable, has considered evidence, if any, presented by the debtor, and has determined that the amount of such debt is past due and legally enforceable; and

(k) Which has not been referred to the Department of Justice or which is not otherwise in litigation with the Board.

4. Section 367.3 is amended by revising paragraphs (a) and (b) and the first sentence of paragraph (c) to read as follows:

### § 367.3 Board responsibilities.

(a) The Board may delegate to an employee or employees the responsibility for collecting any claims owed the Board by means of administrative offset, except that all nontax debts over 180 days delinquent shall be referred to the Department of Treasury for administrative offset through the Treasury Offset Program as required by 31 U.S.C. 3716;

(b) Except for mandatory referral of claims to the Department of Treasury or as otherwise directed by the Secretary of Treasury, before collecting a claim by means of administrative offset, the Board must ensure that administrative offset is feasible, allowable, and appropriate, and must notify the debtor of the Board's policies for collecting a claim by means of administrative offset.

(c) Except for mandatory referral of claims to the Department of Treasury or as otherwise directed by the Secretary of Treasury, whether collection by administrative offset is feasible is a determination to be made on a case-by-case basis, in the exercise of its sound discretion. * * *

* * * * *

Dated: April 10, 1997.

By Authority of the Board.

**Beatrice Ezerski,**

*Secretary to the Board.*

[FR Doc. 97–10191 Filed 4–18–97; 8:45 am]

BILLING CODE 7905–01–P

---

## DEPARTMENT OF HEALTH AND HUMAN SERVICES

## Food and Drug Administration

## 21 CFR Part 178

**[Docket No. 96F–0245]**

## Indirect Food Additives: Adjuvants, Production Aids, and Sanitizers

**AGENCY:** Food and Drug Administration, HHS.

**ACTION:** Final rule.

**SUMMARY:** The Food and Drug Administration (FDA) is amending the food additive regulations to provide for the expanded safe use of 4-chloro-2-[[5-hydroxy-3-methyl-1-(3-sulfophenyl)-1H-pyrazol-4-yl]azo]-5-methylbenzenesulfonic acid, calcium salt (1:1); (C.I. Pigment Yellow 191) as a colorant for all polymers intended for use in contact with food. This action is in response to a petition filed by Hoechst Celanese Corp.

**DATES:** Effective April 21, 1997; written objections and requests for a hearing by May 21, 1997.

**ADDRESSES:** Submit written objections to the Dockets Management Branch (HFA–305), Food and Drug Administration,

12420 Parklawn Dr., rm. 1–23, Rockville, MD 20857.

**FOR FURTHER INFORMATION CONTACT:** Vir D. Anand, Center for Food Safety and Applied Nutrition (HFS–216), Food and Drug Administration, 200 C St. SW., Washington, DC 20204, 202–418–3081.

**SUPPLEMENTARY INFORMATION:** In a notice published in the **Federal Register** of August 27, 1996 (61 FR 44066), FDA announced that a food additive petition (FAP 6B4493) had been filed by Hoechst Celanese Corp., 500 Washington St., Coventry, RI 02816. The petition proposed to amend the food additive regulations in § 178.3297 *Colorants for polymers* (21 CFR 178.3297) to provide for the expanded safe use of 4-chloro-2-[[5-hydroxy-3-methyl-1-(3-sulfophenyl)-1H–pyrazol-4-yl]azo]-5-methylbenzenesulfonic acid, calcium salt (1:1); (C.I. Pigment Yellow 191) as a colorant for all polymers intended for use in contact with food.

FDA has evaluated data in the petition and other relevant material. The agency concludes that the proposed use of the additive is safe, that the additive will achieve its intended technical effect, and therefore, that the regulations in § 178.3297 should be amended as set forth below.

In accordance with § 171.1(h) (21 CFR 171.1(h)), the petition and the documents that FDA considered and relied upon in reaching its decision to approve the petition are available for inspection at the Center for Food Safety and Applied Nutrition by appointment with the information contact person listed above. As provided in § 171.1(h), the agency will delete from the documents any materials that are not available for public disclosure before making the documents available for inspection.

The agency has carefully considered the potential environmental effects of this action. FDA has concluded that the action will not have a significant impact on the human environment, and that an environmental impact statement is not required. The agency's finding of no significant impact and the evidence supporting that finding, contained in an environmental assessment, may be seen in the Dockets Management Branch (address above) between 9 a.m. and 4 p.m., Monday through Friday. No comments were received during the 30-day comment period specified in the filing notice for comments on the environmental assessment submitted with the petition.

Any person who will be adversely affected by this regulation may at any time on or before May 21, 1997, file with the Dockets Management Branch (address above) written objections thereto. Each objection shall be separately numbered, and each numbered objection shall specify with particularity the provisions of the regulation to which objection is made and the grounds for the objection. Each numbered objection on which a hearing is requested shall specifically so state. Failure to request a hearing for any particular objection shall constitute a waiver of the right to a hearing on that objection. Each numbered objection for which a hearing is requested shall include a detailed description and analysis of the specific factual information intended to be presented in support of the objection in the event that a hearing is held. Failure to include such a description and analysis for any particular objection shall constitute a waiver of the right to a hearing on the objection. Three copies of all documents shall be submitted and shall be identified with the docket number found in brackets in the heading of this document. Any objections received in response to the regulation may be seen in the Dockets Management Branch between 9 a.m. and 4 p.m., Monday through Friday.

**List of Subjects in 21 CFR Part 178**

Food additives, Food packaging.

Therefore, under the Federal Food, Drug, and Cosmetic Act and under authority delegated to the Commissioner of Food and Drugs and redelegated to the Director, Center for Food Safety and Applied Nutrition, 21 CFR part 178 is amended as follows:

## PART 178—INDIRECT FOOD ADDITIVES: ADJUVANTS, PRODUCTION AIDS, AND SANITIZERS

1. The authority citation for 21 CFR part 178 continues to read as follows:

**Authority:** Secs. 201, 402, 409, 721 of the Federal Food, Drug, and Cosmetic Act (21 U.S.C. 321, 342, 348, 379e).

2. Section 178.3297 is amended in the table in paragraph (e) by revising the entry for 4-Chloro-2-[[5-hydroxy-3-methyl-1-(3-sulfophenyl)-1H-pyrazol-4-yl]azo]5-methylbenzenesulfonic acid, calcium salt (1:1); (C.I. Pigment Yellow 191), under the heading ''Limitations'' to read as follows:

**§ 178.3297 Colorants for polymers.**

* * * * *

(e) * * *

| Substances | Limitations |
|---|---|
| * * * * * | |
| 4-Chloro-2-[[5-hydroxy-3-methyl-1-(3-sulfophenyl)-1H-pyrazol-4-yl]azo]-5-methylbenzenesulfonic acid, calcium salt (1:1); (C.I. Pigment Yellow 191, CAS Reg. No. 129423–54–7). | For use at levels not to exceed 1.0 percent by weight of the finished polymers. The finished articles are to contact food only under conditions of use B through H as described in Table 2 of § 176.170(c) of this chapter. |
| * * * * * | |

* * *

Dated: April 1, 1997.

**Fred R. Shank,**

*Director, Center for Food Safety and Applied Nutrition.*

[FR Doc. 97–10252 Filed 4–18–97; 8:45 am]

BILLING CODE 4160–01–F

## UNITED STATES INFORMATION AGENCY

## 22 CFR Part 514

## Exchange Visitor Program

**AGENCY:** United States Information Agency.

**ACTION:** Final rule.

**SUMMARY:** The Agency hereby adopts as final, part of the proposed rule published in the **Federal Register** on September 5, 1996 (61 FR 46745). This rule specifically adopts the proposed amendment of existing regulations governing the Agency's internal Exchange Visitor Waiver Review Board set forth at 22 CFR 514.44(g). These changes are necessary to streamline Waiver Board procedures by no longer requiring mandatory referral of certain cases to the Waiver Board. The Agency anticipates that the number of cases afforded Waiver Board review will be significantly reduced.

**DATES:** This rule is effective April 21, 1997.

**FOR FURTHER INFORMATION CONTACT:** Stanley S. Colvin, Assistant General Counsel, United States Information Agency, 301 4th Street, SW., Washington, DC 20547; Telephone, (202) 619–6829.

**SUPPLEMENTARY INFORMATION:** The Agency received nine comments in response to its **Federal Register** notice published September 5, 1996 (61 FR 46745). This notice proposed amendment of existing regulations set forth at 22 CFR 514.44(c) that govern the

Agency's administrative processing of requests for the waiver of the two-year return home requirement to which some exchange visitors are subject, pursuant to the provisions of Section 212(e) of the Immigration and Nationality Act. Specifically, these proposed amendments would change the processing of waiver requests submitted to the Agency by interested government agencies on behalf of foreign medical graduates subject to the two-year return home requirement due to their pursuit of graduate medical education or training in the United States.

The General Accounting Office published a report titled ''Foreign Physicians: Exchange Visitor Program Becoming Major Route to Practicing in U.S. Underserved Areas'' on December 30, 1996. USIA, along with those U.S. Government agencies that request waivers of the two-year home country presence requirement on behalf of foreign physicians, is reviewing this report and the policy implications presented therein. The Agency is also continuing with its review of the legal and policy questions that arise from Section 622 of the recently enacted Illegal Immigration and Immigrant Responsibility Act of 1996. Accordingly, the Agency is delaying publication of a final rule regarding foreign physician waivers but anticipates such publication in the near future.

The nature, composition, and duties of the Waiver Review Board were critiqued extensively in the public comment submitted by the American Immigration Lawyers Association. In part, this comment suggests that the Board should be viewed as an ''appeals court'' to which all disappointed waiver applicants can resort. The Agency does not agree with this suggestion and believes such a structure would cripple the waiver process. This comment also focused on the role of pure legal issues that arise in the waiver process and the manner in which such issues are identified and resolved. The Agency has considered this comment but believes that existing procedures provide adequate procedural safeguards.

In accordance with 5 U.S.C. § 605(b), the Agency certifies that this rule does not have a significant adverse economic impact on a substantial number of small entities. This rule is not considered to be a major rule within the meaning of Section 1(b) of E.O. 12291, nor does it have federal implications warranting the preparation of a Federalism Assessment in accordance with E.O. 12612.

**List of Subjects in 22 CFR Part 514**

Cultural exchange programs.

Dated: April 15, 1997.

**Les Jin,**

*General Counsel.*

Accordingly, 22 CFR part 514 is amended as follows:

## PART 514—EXCHANGE VISITOR PROGRAM

1. The authority citation for part 514 continues to read as follows:

**Authority:** 8 U.S.C. 1101(a)(15)(J), 1182, 1258, 22 U.S.C. 1431–1421 2451–2460: Reorganization Plan No. 2 of 1977, 42 FR 62461, 3 CFR, 1977 Comp. p. 200; E.O. 12048 43 FR 13361, 3 CFR, 1978 Comp. p. 168; USIA Delegation Order No. 85–5 (50 FR 27393).

2. Section 514.44 is amended by removing paragraph (h) and revising paragraph (g) to read as follows:

### § 514.44 Two-year home-country physical presence requirement.

* * * * *

(g) *The Exchange Visitor Waiver Review Board.*—(1) The Exchange Visitor Waiver Review Board (''Board'') shall consist of the following Agency officers:

(i) The Associate Director of the Bureau of Educational and Cultural Affairs, or his or her designee;

(ii) The Director of the geographic area office responsible for the geographical area of the waiver applicant, or his or her designee;

(iii) The Director of the office of Congressional and Intergovernmental Affairs, or his or her designee;

(iv) The Director of the Office of Academic Exchange, or his or her designee; and

(v) The Director of the Office of Research, or his or her designee.

(2) A person who has had substantial prior involvement in a particular case referred to the Board may not be appointed to, or serve on, the Board for that particular case unless the General Counsel determines that the individual's inclusion on the Board is otherwise necessary or practicably unavoidable.

(3) The Associate Director of the Bureau of Educational and Cultural Affairs, or his or her designee, shall serve as Board Chairman. No designee under paragraph (g)(3) shall serve for more than 2 years.

(4) Cases will be referred to the Board at the discretion of the Branch Chief, Waiver Review Branch, of the Agency's office of Exchange Visitor Program Services. The Waiver Review Branch shall prepare a summary of the particular case referred and forward it along with copy of the relevant file to the Board Chairman. The Chief, Waiver Review Branch, or his or her designee, may, at the Chairman's discretion, appear and present facts related to the case but shall not participate in Board deliberations.

(5) The Chairman of the Board shall be responsible for convening the Board and distributing all necessary information to its members. Upon being convened, the Board shall review the case file and weight the request against the program, policy, and foreign relations aspects of the case.

(6) The General Counsel shall appoint, on a case-by-case basis, from among the attorneys in the Office of the General Counsel, one attorney to serve as legal advisor to the Board.

(7) At the conclusion of its review of the case, the Board shall make a written recommendation either to grant or to deny the waiver application. The written recommendation of a majority of the Board shall constitute the recommendation of the Board. Such recommendation shall be promptly transmitted by the Chairman to the Branch Chief, Waiver Review Branch.

(8) The recommendation of the Board in any case reviewed by it shall constitute the recommendation of the Agency and such recommendation shall be forwarded to the Commissioner by the Branch Chief, Waiver Review Branch.

[FR Doc. 97–10140 Filed 4–18–97; 8:45 am]

BILLING CODE 8230–01–M

---

## DEPARTMENT OF TRANSPORTATION

## Coast Guard

## 33 CFR Part 117

**[CGD05–97–001]**

## Temporary Deviation; Miles River, Easton, MD

**AGENCY:** Coast Guard, DOT.

**ACTION:** Notice of temporary deviation; request for comments.

**SUMMARY:** At the request of the Maryland Department of Transportation (MDOT), the Coast Guard has approved a temporary deviation from the regulations that govern the operation of the Maryland Route 370 drawbridge across the Miles River, Mile 10.0, at Easton, Maryland. This temporary deviation will test the effects of requiring a six hour advance notice for drawbridge openings between 6 p.m. and 6 a.m. It also will designate the hours during which the bridge must open on signal as the period between 6 a.m. and 6 p.m. Currently the draw of

the Route 370 bridge is required to open on signal from sunrise to sunset. Vessels wishing to pass through the draw between sunset and sunrise must notify the bridge tender of the time they wish to pass, and the draw opens as close to that time as practicable. This test is intended to help the Coast Guard determine if a permanent change to the regulations would relieve the bridge owner of the burden of having a bridge tender constantly available at times when there are few or no requests for openings while still providing for the reasonable needs of navigation.

**DATES:** This deviation is effective from April 1 through June 30, 1997. Comments must be received on or before July 31, 1997.

**ADDRESSES:** Comments should be mailed to Commander (Aowb), USCG Atlantic Area, Federal Building, 4th Floor, 431 Crawford Street, Portsmouth, Virginia 23704–5004, or may be hand delivered to the same address between 8 a.m. and 4 p.m., Monday through Friday, except Federal holidays. The telephone number is (757) 398–6222. Comments will become a part of this docket and will be available for inspection and copying at the above address.

**FOR FURTHER INFORMATION CONTACT:** Ann B. Deaton, Bridge Administrator, USCG Atlantic Area, at (757) 398–6222.

**SUPPLEMENTARY INFORMATION:**

## Request for Comments

The Coast Guard encourages interested persons to comment on this temporary deviation by submitting written data, views, or arguments. Persons submitting comments should include their names and addresses, identify this notice of temporary deviation (CGD05–97–001) and the specific section of this deviation to which each comment applies, and give the reason for each comment. The Coast Guard requests that all comments and attachments be submitted in an unbound format suitable for copying and electronic filing. If not practical, a second copy of any bound material is requested. Persons wanting acknowledgement of receipt of comments should enclose a stamped self-addressed postcard or envelope.

The Coast Guard will consider all comments received during the comment period when determining whether to propose a permanent change to the requlation.

The Coast Guard plans no public hearing. Persons may request a public hearing by writing to the Commander (AOWB), USCG Atlantic Area, at the address under **ADDRESSES**. The request should include reasons why a hearing would be beneficial. If it determines that the opportunity for oral presentations will aid any future proposed rulemaking, the Coast Guard will hold a public hearing at a time and place announced by a later notice in the **Federal Register**.

## Background and Purpose

The Coast Guard is conducting a temporary deviation from the requirements of 33 CFR 117.565 to test the effects of requiring a six hour advance notice for openings from 6 p.m. to 6 a.m. for the Maryland Route 370 bridge, and changing the requirement for opening on demand from the currently designated period from sunrise to sunset to the period from 6 a.m. to 6 p.m. This change was requested by the Maryland Department of Transportation (MDOT) due to the minimal number of bridge openings during the period between 6 p.m. and 6 a.m. and to better clarify the times during which the bridge must open on signal. This test is based on a review of drawlog records from 1992 and 1993 provided by MDOT. These records show that during the hours between 6 p.m. and 6 a.m., a total of 4 bridge openings were recorded for the entire two year period. Due to the minimal number of openings, this test will be conducted to determine if a permanent change to the regulations would still provide any needed drawbridge openings to accommodate vessel traffic while helping to relieve the bridge owner of the burden of having a bridgetender constantly available.

Based on the above information, Commander, Fifth Coast Guard District has approved a temporary deviation from the requirements of 33 CFR 117.565 from April 1 through June 30, 1997. This temporary deviation will require the drawbridge to open on signal from 6 a.m. to 6 p.m., and from 6 p.m. to 6 a.m. a six hour advance notice to the Maryland Department of Transportation would be required. The provisions of 33 CFR 117.31 which provide for the passage on signal for Federal, State and local Government vessels used for public safety; vessels in distress where delay would endanger life and property; commercial vessels engaged in rescue or emergency salvage operations; and vessels seeking shelter from severe weather will remain unchanged.

The terms of the temporary deviation are as follows: the draw of the S370 bridge, mile 10, located in Easton, Maryland, shall operate as follows from April 1 through June 30, 1997: from 6 a.m. to 6 p.m. shall open on signal; and from 6 p.m. to 6 a.m. to draw shall open if at least six hours advance notice is given to the Maryland Department of Transportation. Signs will be posted on the bridge providing the necessary information and phone numbers. Vessel operators may contact the Maryland Department of Transportation, state-wide operations center at phone number 1–800–543–2515.

Dated: March 28, 1997.

**Kent H. Williams,**

*Vice Admiral, U.S. Coast Guard, Commander, Fifth Coast Guard District.*

[FR Doc. 97–10148 Filed 4–18–97; 8:45 am]

BILLING CODE 4910–14–M

---

## POSTAL SERVICE

## 39 CFR Part 20

## Global Package Link

**AGENCY:** Postal Service.

**ACTION:** Final rule.

**SUMMARY:** The Postal Service, after considering comments submitted in response to its request in 61 FR 55 572 (October 28, 1996) for comments on an interim rule establishing a charge for harmonization of catalog items for mailers using Global Package Link, hereby gives notice that it is adopting the interim regulations on a permanent basis, with modification.

**EFFECTIVE DATE:** 12:01 a.m., April 21, 1997.

**FOR FURTHER INFORMATION CONTACT:** Robert Michelson, (202) 268–5731.

**SUPPLEMENTARY INFORMATION:** On October 28, 1996, the Postal Service published in the **Federal Register** interim regulations establishing a charge of $1.25 per item for catalog harmonization work performed by the Postal Service for the mailer. Harmonized items are needed for most GPL destination countries to ensure an expeditious customs clearance and to allow the USPS to settle the customs charges on behalf of the mailer. The service includes expedited customs clearance through use of a software-based information system containing all the applicable duty and tax rates for specific products being mailed to destination countries. Of the current GPL destination countries, Brazil, Canada, Chile, Germany, Japan, and the U.K., only Japan does not require harmonized items for a GPL clearance.

Comments were due on or before December 15, 1996. Comments were received from one commenter, a company engaged in international package mail order, J.C. Penney

International Catalog, Inc. After considering the comments, the Postal Service has decided to adopt the rule with modification.

J.C. Penney asserts that harmonization is a basic component of the GPL service and therefore is included in the GPL rate chart. The Postal Service does not agree that harmonization is included in the GPL rate chart. When GPL, then called IPCS, was first implemented in December 1994, Japan was the only destination country and did not require a harmonized datafile to be transmitted for customs clearance. All subsequent rates for GPL to other destinations were developed without inclusion of customs harmonization costs, with the knowledge that at a later date a specific harmonization fee would be implemented when the costs to perform this service were fully revealed. By late summer of 1996, the Postal Service had determined its customs harmonization costs and took action to publish a specific fee in the **Federal Register** (October 28, 1996). The Postal Service does not feel it is appropriate to include these costs in the rate charts for GPL because GPL mailers have very different levels of need for harmonization. For example, if the harmonization costs were in the rate charts, a high volume GPL mailer with a small number of catalog items would be paying for harmonization services not fully utilized, while a lower volume GPL mailer with a large catalog and many more harmonized items would be receiving more services and paying the same rate. Also, some customers may already have a fully harmonized database of their catalog items at the time of initiating GPL service, and as such should not be paying higher rates for a harmonization service that they will not use.

J.C. Penney also asserts that billing for this portion of the service causes an unnecessary accounting step (separate billing, invoicing, etc.), creating numerous invoices for small specialty catalogs (hundreds of dollars) and a disincentive for larger catalogers with thousands of items. The Postal Service disagrees that invoicing for small amounts will be an unnecessary accounting step. To our knowledge, most companies do not excuse payment from customers owing small amounts just because it is extra effort. The USPS has developed an accounts receivable infrastructure and as such is able to generate invoices in an automated manner.

In its last assertion, J.C. Penney claims that a number of private customs brokers in Canada are already set up to handle pre-customs advisory and package processing for catalog shipments and do not charge separate small fees for harmonization but rather incorporate this feature in the overall rate per package. J.C. Penney asserts that if the USPS were to add this new fee, GPL service would no longer be competitive. The Postal Service will not dispute that some Canada customs brokers include this charge in the overall package delivery fee, but the USPS is also aware that other Canada customs brokers do charge separately for harmonization and do not include these charges as part of the per package fee. Harmonization fees alone are a relatively small investment for an international mailer to make and therefore is unlikely to make the GPL service noncompetitive in the marketplace.

After carefully reviewing J.C. Penney's comments and input received from other sources, the Postal Service has decided to modify the policy regarding harmonization fees to allow each GPL mailer to have 2,500 catalog items harmonized by the Postal Service at no cost during the first 12 months after signing a GPL agreement to a destination country that requires harmonization. This free service will be offered only once to each customer and only during the first 12 months after signing a GPL agreement. Any harmonization service performed in excess of 2,500 items and/or after 12 months will be assessed a per-item fee of $1.25.

Accordingly, the Postal Service adopts the following amendments to the International Mail Manual, which is incorporated by reference in the Code of Federal Regulations. See 39 CFR 20.1. All other interim changes in the rule for Global Package Link service which were published in the **Federal Register** as amendments of the interim rule remain in effect as interim rules.

**List of Subjects in 39 CFR Part 20**

International postal service, Foreign relations.

## PART 20—[AMENDED]

1. The authority citation for 39 CFR part 20 continues to read as follows:

**Authority:** 5 U.S.C. 552(a); 39 U.S.C. 401, 404, 407, 408.

2. Chapter 6 of the International Mail Manual is amended to read as follows:

626.4 Customs Clearance

* * * * *

626.421 Catalog Harmonization Services

The Postal Service will provide free catalog harmonization services for the first 2,500 catalog items presented for harmonization during the first 12 months following the GPL customer signing an agreement for a GPL destination country that requires harmonization. Any harmonization work performed in excess of 2,500 for each customer and/or after the first 12 months of signing a GPL agreement will be charged a fee of $1.25 per item. The mailer has the option of performing their own harmonization, provided it is done in a format compatible with the Postal Service's Customs Pre-Advisory System (CPAS) software.

* * * * *

**Stanley F. Mires,**

*Chief Counsel, Legislative.*

[FR Doc. 97–10250 Filed 4–18–97; 8:45 am]

BILLING CODE 7710–12–P

## ENVIRONMENTAL PROTECTION AGENCY

## 40 CFR Part 52

**[ND8–1–7233a & ND–001–0001a; FRL–5812–3]**

## Clean Air Act Approval and Promulgation of State Implementation Plan for North Dakota; Revisions to the Air Pollution Control Rules

**AGENCY:** Environmental Protection Agency (EPA).

**ACTION:** Direct final rule.

**SUMMARY:** EPA approves certain State implementation plan (SIP) revisions submitted by the State of North Dakota with letters dated August 15, 1995 and January 9, 1996. The revisions address air pollution control rules regarding general provisions; open burning; emissions of particulate matter, certain settleable acids and alkaline substances, and fugitives; air pollution emergency episodes; new source performance standards (NSPS); national emission standards for hazardous air pollutants (NESHAPs); and the minor source construction and operating permit programs. The State's January 9, 1996 submittal also revised SIP Chapter 6, Air Quality Surveillance, to identify current activities regarding visibility monitoring. In addition, these submittals included revisions involving the Title V Operating Permits Program, the Acid Rain Program, the restriction of sulfur compound emissions, and emission standards for hazardous air pollutants for source categories, which

will be handled separately. Finally, EPA is correcting an incorporation by reference error that was made by EPA in an October 20, 1993 rulemaking regarding the State's regulation for sulfur compounds.

**DATES:** This final rule is effective on June 20, 1997 unless comments are received in writing by May 21, 1997. If the effective date is delayed, timely notice will be published in the **Federal Register**.

**ADDRESSES:** Copies of the State's submittal and other information are available for inspection during normal business hours at the following locations: Air Program, Environmental Protection Agency, Region VIII, 999 18th Street, suite 500, Denver, Colorado 80202–2405; North Dakota State Department of Health and Consolidated Laboratories, Environmental Health Section, 1200 Missouri Avenue, Bismarck, North Dakota 58502–5520; and The Air and Radiation Docket and Information Center, 401 M Street, SW., Washington, DC 20460.

**FOR FURTHER INFORMATION CONTACT:** Amy Platt, Environmental Protection Agency, Region VIII, (303) 312–6449.

**SUPPLEMENTARY INFORMATION:**

## I. Background

The Governor of North Dakota submitted various revisions to the State's air pollution control rules with letters to EPA dated August 15, 1995 and January 9, 1996. These revisions were necessary, for the most part, to make the rules consistent with Federal requirements or for clarification purposes. The January 9, 1996 submittal also revised SIP Chapter 6, Air Quality Surveillance, in order to identify current activities regarding visibility monitoring and to withdraw an April 24, 1994 revision to the same chapter.

## II. This Action

### *A. Analysis of State Submissions*

1. Procedural Background

The Act requires States to observe certain procedural requirements in developing implementation plans and plan revisions for submission to EPA. Section 110(a)(2) of the Act provides that each implementation plan submitted by a State must be adopted after reasonable notice and public hearing. Section 110(l) of the Act similarly provides that each revision to an implementation plan submitted by a State under the Act must be adopted by such State after reasonable notice and public hearing.

EPA also must determine whether a submittal is complete and therefore warrants further EPA review and action (see section 110(k)(1) and 57 FR 13565). EPA's completeness criteria for SIP submittals are set out at 40 CFR part 51, appendix V. EPA attempts to make completeness determinations within 60 days of receiving a submission. However, a submittal is deemed complete by operation of law if a completeness determination is not made by EPA six months after receipt of the submission.

To entertain public comment, the State of North Dakota, after providing adequate notice, held public hearings on December 1, 1994 and July 25, 1995 to address revisions to the SIP and Air Pollution Control Rules. Following the public hearings, public comment period, and completion of legal review by the North Dakota Attorney General's Office, the North Dakota State Health Council adopted the revisions, which became effective on August 1, 1995 and January 1, 1996, respectively.

The Governor of North Dakota submitted the revisions to the SIP with letters dated August 15, 1995 and January 9, 1996. The SIP revisions were reviewed by EPA to determine completeness in accordance with the completeness criteria set out at 40 CFR part 51, appendix V. The submittals were found to be complete and letters dated September 28, 1995 and February 13, 1996 were forwarded to the Governor indicating the completeness of the respective submittals and the next steps to be taken in the review process.

2. August 15, 1995 Revisions

The August 15, 1995 submittal addresses North Dakota Air Pollution Control Rules involving general provisions, emissions of particulate matter, prevention of air pollution emergency episodes, NESHAPs (40 CFR Part 61), minor source permitting and fees, Title V Operating Permits Program, and the Acid Rain Program. The revisions regarding the Title V Operating Permits Program and the Acid Rain Program were handled separately. The August 15, 1995 submittal also included a request for Clean Air Act Section 112(l) delegation of the 40 CFR Part 63 NESHAPs. This request was addressed in an October 17, 1995 letter from William P. Yellowtail, EPA, to Francis J. Schwindt, North Dakota Department of Health.

The remaining portions of the August 15, 1995 submittal are being addressed in this document and involve the following sections of the North Dakota Air Pollution Control Rules: 33–15–01 General Provisions; 33–15–05 Emissions of Particulate Matter Restricted; 33–15–11 Prevention of Air Pollution Emergency Episodes; 33–15–13 Emission Standards for Hazardous Air Pollutants; 33–15–14 Designated Air Contaminant Sources, Permit to Construct, Minor Source Permit to Operate, Title V Permit to Operate (sections specific to minor sources); and 33–15–23 Fees.

a. Chapter 33–15–01 General Provisions

This chapter was revised to include several definitions for various types of waste material, including definitions for ''infectious waste,'' ''refuse,'' and ''trash.'' The new definitions parallel definitions found in other North Dakota environmental regulations, including solid waste, hazardous waste, and radiological rules. These revisions are approvable.

b. Chapter 33–15–05 Emissions of Particulate Matter Restricted

Section 3, Incinerators, of this chapter was eliminated and replaced with three new sections regarding infectious waste incinerators, refuse incinerators, and other waste incinerators. Section 33–15–05–03.1., regarding infectious waste incinerators, requires owners of existing infectious waste incinerators to maintain records, provide training to the operators of the incinerators, and to correct malfunctions before resuming incineration. New infectious waste incinerators (burning less than 10,000 pounds of infectious waste per week) will be required to meet a 10% opacity limit and be designed to maintain a temperature of 1800 °F in the secondary chamber with a residence time of at least one second. A presumptive minimum stack height of 40 feet will also be required. Recordkeeping, monitoring, operator training, and reporting requirements are also included in the regulation.

New large infectious waste incinerators (burning 10,000 pounds or more of infectious waste per week) will be required to meet all the requirements for smaller infectious waste incinerators plus standards for particulate matter, hydrogen chloride, carbon monoxide, and dioxins/furans. Recordkeeping, reporting, operator training, and performance testing are also required.

Section 33–15–05–03.2., regarding refuse incinerators, prohibits the burning of any recyclable material when a recycling option is reasonably available. This prohibition goes into effect one year after the promulgation of the rule. The regulations also require owners/operators of incinerators that burn trash to upgrade their units to standards established for new units within two years of promulgation of the

rule. New trash incinerators are required to meet a 10% opacity limit and be designed to have a minimum temperature of 1500 °F and ½ second retention time in the secondary chamber. A presumptive minimum stack height of 40 feet is included in the rule, as well as monitoring requirements and waste charging limitations.

Section 33–15–05–03.3., regarding other waste incinerators, requires new salvage incinerators to meet the same requirements as new infectious waste incinerators. This section also gives the State the authority to establish unit specific requirements for air curtain destructors, industrial waste and special waste incinerators, and crematoriums.

These revisions are approvable. Please note that EPA intends to promulgate a medical waste incinerator NSPS in the near future. Should the State's infectious waste incinerator rule be less stringent than the forthcoming medical waste incinerator NSPS, the State will need to revise its rule and the SIP accordingly.

c. Chapter 33–15–11 Prevention of Air Pollution Emergency Episodes

Changes to this chapter were made to make it consistent with the new definitions in Chapter 33–15–01 regarding industrial waste. These revisions are minor and approvable.

d. Chapter 33–15–13 Emission Standards for Hazardous Air Pollutants

The changes to this chapter include updating the date for Federal regulations in 40 CFR Part 61 to be incorporated by reference and to incorporate for the first time 40 CFR part 61, subpart I (to regulate radionuclide emissions from facilities licensed by the Nuclear Regulatory Commission (NRC) and other Federal facilities not covered by subpart H of 40 CFR Part 61). The revision to update the incorporation by reference date is approvable.

However, on December 30, 1996, EPA rescinded subpart I as it applies to NRC or NRC Agreement State licensed facilities other than commercial nuclear power plants. EPA determined that the NRC regulatory program for licensed facilities other than commercial nuclear power plants protects public health with an ample margin of safety, the same level of protection that would be afforded by continued implementation of subpart I. Therefore, EPA rescinded subpart I to eliminate overlapping regulation of these emissions. See 61 FR 68972–68981. As a result, EPA cannot incorporate subpart I into the North Dakota SIP, as requested.

e. Chapter 33–15–14 Designated Air Contaminant Sources, Permit To Construct, Minor Source Permit To Operate, Title V Permit To Operate

Changes to this chapter were made to make it consistent with the new definitions in Chapter 33–15–01 regarding incinerators. Further changes to this chapter involve the removal of the sections which establish Permit to Construct and Minor Source Permit to Operate fees (33–15–14–02.12. and 33–15–14–03.10.). These sections were moved to a new chapter, 33–15–23, Fees. These revisions are approvable. The revisions regarding the Title V permit to operate (section 33–15–14–06) will be handled separately.

f. Chapter 33–15–23 Fees

A new chapter was developed to address fees that are charged to sources under the Air Pollution Control Program. These fees were originally included in Chapter 33–15–14. The provisions in Chapter 33–15–14 were relocated to this new chapter with a few minor revisions. These revisions are approvable since they are basically what was approved in the SIP previously in Chapter 33–15–14. The sections regarding major source permit to operate fees (33–14–23–04) and phase I substitution units (33–15–23–05) will be handled separately.

3. January 9, 1996 Revisions

The January 9, 1996 submittal addresses visibility monitoring requirements outlined in Chapter 6 of the SIP. With this submittal, the State formally withdraws an April 1994 submittal of Section 6.12 of the SIP and replaces it with a new Section 6.13, which identifies current activities regarding visibility monitoring.

In addition, the January 9, 1996 submittal included revisions to Chapter 33–15–06, Emissions of Sulfur Compounds Restricted, and requests for direct delegation of revisions to Chapter 33–15–14, Designated Air Contaminant Sources, Permit to Construct, Minor Source Permit to Operate, Title V Permit to Operate (section specific to Title V Permit to Operate) and Chapter 33–15–22, Emission Standards for Hazardous Air Pollutants for Source Categories, (40 CFR Part 63 NESHAPs). These revisions and requests will be handled separately.

Finally, the January 9, 1996 submittal addresses the following chapters of the North Dakota Air Pollution Control Rules, which will be addressed in this document: 33–15–01 General Provisions; 33–15–04 Open Burning Restrictions; 33–15–09 Emissions of Certain Settleable Acids and Alkaline Substances Restricted; 33–15–12 Standards of Performance for New Stationary Sources; 33–15–13 Emission Standards for Hazardous Air Pollutants; 33–15–14–01.1 Designated Air Contaminant Sources, Permit to Construct, Minor Source Permit to Operate, Title V Permit to Operate (section specific to definitions); and 33–15–17 Restriction of Fugitive Emissions.

a. Chapter 6 Air Quality Surveillance

In April 1994, Section 6.12 of the SIP was submitted to EPA to indicate that visibility monitoring was not necessary due to a lack of visibility impairment and a database indicating stable conditions. In late 1994 and early 1995, there was a resurgence of activity in the oil fields in Western North Dakota. Therefore, the State requested that EPA take no action on Section 6.12 at that time. A new Section 6.13 was developed to identify current activities regarding visibility monitoring, and it was included in the January 1996 submittal. Section 6.12 was withdrawn.

An increase in oil drilling activities in 1995 prompted the National Park Service to revisit the idea of establishing visibility monitoring sites at the Class I areas in North Dakota. The State plans to enter into a memorandum of understanding with the National Park Service to proceed with establishing visibility monitoring at Theodore Roosevelt National Park. This arrangement is acceptable to EPA.

b. Chapter 33–15–01 General Provisions

Under Subsection 33–15–01–04, the definition of volatile organic compounds (VOC) was revised to match the Federal definition. At the date of this submittal, the State's revision was consistent with Federal requirements, and therefore, is being approved as submitted on January 9, 1996.

However, on October 8, 1996, EPA published a revised definition of VOC (61 FR 52850), which became effective on November 7, 1996. EPA's definition excludes perchloroethylene (perc) from the definition of VOC on the basis that it is of negligible reactivity and does not contribute to tropospheric ozone formation. The definition submitted to EPA in January 1996 does not exclude this compound. Therefore, this State definition of VOC provides for the regulation of a compound (perc) which is not considered a VOC by EPA. In light of EPA's most recent definition of VOC, EPA will not enforce against sources for failure to control the emission of compounds exempt from the Federal VOC definition. North Dakota is advised of EPA's most recent VOC definition

and future SIP revisions should reflect it accordingly.

c. Chapter 33–15–04 Open Burning Restrictions

The revisions to this chapter involve applying several new and, in some cases, more restrictive conditions to all permissible open burning and revising the applicability for open burning of household refuse. The revisions allow open burning of household refuse only when no collection and disposal service is required by a municipality or other government entity. The revisions also limit material to be burned to that of one family instead of three households (as previously allowed). These revisions are approvable.

d. Chapter 33–15–09 Emission of Certain Settleable Acids and Alkaline Substances Restricted

This chapter was deleted in its entirety. These rules had been in North Dakota's Air Pollution Control Rules for over 20 years without ever being utilized. The method of sampling was considered archaic and no longer used by the State. Further, many Federal regulations, such as NSPS and the Acid Rain Rules, were developed after the adoption of Chapter 33–15–09 and address sources that emit acidic or alkaline substances. In addition, the State's Air Toxics Program has been used to address emissions of such substances. Chapter 33–15–09 was obsolete and, therefore, the deletion of it is approvable.

e. Chapter 33–15–12 Standards of Performance for New Stationary Sources

Chapter 33–15–13 Emission Standards for Hazardous Air Pollutants

The revisions to 33–15–12 and 33–15–13 incorporate by reference the Federal NSPS in 40 CFR part 60 and the Federal NESHAPs in 40 CFR part 61, as in effect on May 1, 1995, with the exception of 40 CFR part 61, subparts B, H, K, Q, R, T, and W (*i.e.*, radionuclides). Again, as discussed above in section II.A.2.d., EPA cannot act on the State's request to incorporate by reference subpart I since it has been rescinded.

Major revisions were made in Chapter 33–15–13, Section 02, Emission Standard for Asbestos. Substantive changes were made to the sections dealing with definitions and asbestos abatement licensing and certification.

Revisions to the asbestos rules were necessary due to EPA's promulgation of changes to 40 CFR Part 763, Appendix C to Subpart E, the Asbestos Model Accreditation Plan (MAP). On February 3, 1994, EPA issued the interim final rule to revise the MAP in response to requirements detailed in the Asbestos School Hazard Abatement Reauthorization Act of 1990 (ASHARA). Among other things, the revised MAP includes the following: (1) requires that individuals must be accredited to work with asbestos in schools and public and commercial buildings and clarifies the types of work activities which are applicable; (2) increases the minimum number of hours of training for asbestos abatement workers and contractor/supervisors; (3) distinguishes between the training requirements for each of the five disciplines; (4) expands the project designer curriculum; (5) alters requirements for training certificates; (6) establishes new enforcement criteria and procedures for withdrawing licenses and certificates; (7) adds new definitions; and (8) adds recordkeeping requirements for training providers. By far the most significant change to the MAP was the requirement for certification of all persons performing asbestos abatement in public and commercial buildings. The interim rule was finalized and became effective on October 4, 1994.

The State revised its asbestos rules to be consistent with the new MAP and all references to the MAP were amended to cite the revised plan date (i.e., February 3, 1994). In addition, several minor corrections and clarifications were made to the rule.

EPA has reviewed the State's revised NSPS and NESHAPs regulations (including the asbestos rules) and determined that they are approvable, with the exception of the incorporation of 40 CFR part 61, subpart I, as in effect on May 1, 1995. EPA cannot act on subpart I because it was rescinded on December 30, 1996 (see II.A.2.d. above and 61 FR 68972–68981).

f. 33–15–14 Designated Air Contaminant Sources, Permit To Construct, Minor Source Permit to Operate, Title V Permit To Operate

Minor modifications were made to Section 33–15–14–01.1, Definitions, in order to be consistent with Federal regulations. These revisions, therefore, are approvable.

As mentioned above, this submittal also included revisions to North Dakota's Title V Permit to Operate Program, which will be handled separately.

g. 33–15–17 Restriction of Fugitive Emissions

Section 33–15–17–02.1 was deleted. This section had established a standard and monitoring methodology for the difference between upwind and downwind concentrations of total suspended particulate (TSP). The State believed the standard to be outdated since neither the State nor industry monitors for it anymore. Further, a source could have actually exceeded the $PM_{10}$ National Ambient Air Quality Standard (NAAQS) but still have been in compliance with this fugitive dust provision (*i.e.*, the TSP standard was meaningless for protecting the $PM_{10}$ NAAQS). In addition, the State and industry operate a network of $PM_{10}$ samplers in North Dakota, and the results of sampling indicate compliance with the $PM_{10}$ NAAQS. As a result, the State believes the deletion of this provision does not negatively impact the NAAQS, and EPA believes, therefore, that the deletion of this fugitive dust provision is approvable.

## III. Correction of Incorporation by Reference Error

In an October 20, 1993 rulemaking, EPA approved revisions to the North Dakota Administrative Code, Chapter 33–15–06, Emissions of Sulfur Compounds Restricted, which became effective on June 1, 1992. (See 58 FR 54043, 40 CFR 52.1820(c)(24)(i)(A).) However, in the material that EPA sent to The Air and Radiation Docket and Information Center for incorporation by reference into the SIP, EPA only incorporated those provisions of Chapter 33–15–06 that were different from the previous version of Chapter 33–15–06 approved by EPA. However, the entire chapter should have been incorporated into the SIP because it had been recodified by the State since the previous SIP approval of that chapter by EPA. Consequently, EPA is correcting its error by resubmitting Chapter 33–15–06, as effective on June 1, 1992, to The Air and Radiation Docket and Information Center for incorporation into the SIP in its entirety.

## IV. Final Action

EPA is taking the following actions on North Dakota's SIP revisions, as submitted by the Governor with letters dated August 15, 1995 and January 9, 1996. EPA approves the revisions in the August 15, 1995 submittal concerning the following North Dakota Air Pollution Control Rules: 33–15–01 General Provisions; 33–15–05 Emissions of Particulate Matter Restricted; 33–15–11 Prevention of Air Pollution Emergency Episodes; 33–15–13 Emission Standards for Hazardous Air Pollutants; 33–15–14 Designated Air Contaminant Sources, Permit to Construct, Minor Source Permit to Operate, Title V Permit to Operate (sections specific to minor sources); and

33–15–23 Fees. Revisions regarding the Title V Operating Permits Program and the Acid Rain Program were handled separately. The August 15, 1995 submittal also included a request for Clean Air Act Section 112(l) delegation of the 40 CFR Part 63 NESHAPs. This request was addressed in an October 17, 1995 letter from William P. Yellowtail, EPA, to Francis J. Schwindt, North Dakota Department of Health.

EPA approves revisions in the January 9, 1996 submittal which address revisions to the following North Dakota Air Pollution Control Rules: 33–15–01 General Provisions; 33 15–04 Open Burning Restrictions; 33–15–09 Emissions of Certain Settleable Acids and Alkaline Substances Restricted; 33–15–12 Standards of Performance for New Stationary Sources; 33–15–13 Emission Standards for Hazardous Air Pollutants; 33–15–14–01.1 Designated Air Contaminant Sources, Permit to Construct, Minor Source Permit to Operate, Title V Permit to Operate (section specific to definitions); and 33–15–17 Restriction of Fugitive Emissions. EPA also approves visibility monitoring requirements outlined in Chapter 6 of the SIP. With this submittal, the State formally withdraws an April 1994 submittal of Section 6.12 of the SIP and replaces it with a new Section 6.13, which identifies current activities regarding visibility monitoring.

In addition, the January 9, 1996 submittal included revisions to Chapter 33–15–06, Emissions of Sulfur Compounds Restricted, and requests for direct delegation of revisions to Chapter 33–15–14, Designated Air Contaminant Sources, Permit to Construct, Minor Source Permit to Operate, Title V Permit to Operate (section specific to Title V Permit to Operate) and Chapter 33–15–22, Emission Standards for Hazardous Air Pollutants for Source Categories, (40 CFR Part 63 NESHAPs). These revisions and requests will be handled separately.

This approval provides the State with the authority for implementation and enforcement of all Federal NSPS and NESHAPs (except 40 CFR part 61, subparts B, H, K, Q, R, T, and W, pertaining to radionuclides) promulgated as of May 1, 1995. However, the State's NSPS and NESHAPs authorities do not include those authorities which cannot be delegated to the states, as defined in 40 CFR parts 60 and 61.

In addition, EPA cannot act on the State's request to incorporate by reference 40 CFR part 61, subpart I (regarding radionuclide emissions from facilities licensed by the NRC and other Federal facilities not covered by subpart H) because EPA rescinded subpart I (see 61 FR 68972–68981, December 30, 1996) subsequent to the State's adoption of these revisions.

Finally, EPA is correcting an incorporation by reference error by resubmitting Chapter 33–15–06, Emissions of Sulfur Compounds Restricted, to The Air and Radiation Docket and Information Center for incorporation into the SIP in its entirety.

EPA is publishing this action without prior proposal because the Agency views this as a noncontroversial amendment and anticipates no adverse comments. However, in a separate document in this **Federal Register** publication, EPA is proposing to approve the SIP revision should adverse or critical comments be filed. This action will be effective June 20, 1997 unless, by May 21, 1997, adverse or critical comments are received.

If EPA receives such comments, this action will be withdrawn before the effective date by publishing a subsequent notice that will withdraw the final action. All public comments received will be addressed in a subsequent final rule based on this action serving as a proposed rule. EPA will not institute a second comment period on this action. Any parties interested in commenting on this action should do so at this time. If no such comments are received, the public is advised that this action will be effective on June 20, 1997.

Nothing in this action should be construed as permitting or allowing or establishing a precedent for any future request for revision to any SIP. Each request for revision to a SIP shall be considered separately in light of specific technical, economic, and environmental factors and in relation to relevant statutory and regulatory requirements.

## V. Administrative Requirements

### *A. Executive Order 12866*

This action has been classified as a Table 3 action for signature by the Regional Administrator under the procedures published in the **Federal Register** on January 19, 1989 (54 FR 2214–2225), as revised by a July 10, 1995 memorandum from Mary Nichols, Assistant Administrator for Air and Radiation. The Office of Management and Budget (OMB) has exempted this regulatory action from E.O. 12866 review.

### *B. Regulatory Flexibility Act*

Under the Regulatory Flexibility Act, 5 U.S.C. 600, *et seq.*, EPA must prepare a regulatory flexibility analysis assessing the impact of any proposed or final rule on small entities. 5 U.S.C. 603 and 604. Alternatively, EPA may certify that the rule will not have a significant economic impact on a substantial number of small entities. Small entities include small businesses, small not-for-profit enterprises, and government entities with jurisdiction over populations of less than 50,000.

SIP approvals under section 110 and subchapter I, part D of the Clean Air Act do not create any new requirements, but simply approve requirements that the State is already imposing. Therefore, because the Federal SIP approval does not impose any new requirements, I certify that it does not have a significant impact on any small entities affected. Moreover, due to the nature of the Federal-State relationship under the CAA, preparation of a flexibility analysis would constitute Federal inquiry into the economic reasonableness of state action. The Clean Air Act forbids EPA to base its actions concerning SIPs on such grounds. *Union Electric Co.* v. *U.S. E.P.A.*, 427 U.S. 246, 256–66 (1976); 42 U.S.C. 7410(a)(2).

### *C. Unfunded Mandates*

Under Section 202 of the Unfunded Mandates Reform Act of 1995 (''Unfunded Mandates Act''), signed into law on March 22, 1995, EPA must prepare a budgetary impact statement to accompany any proposed or final rule that includes a Federal mandate that may result in estimated costs to State, local, or tribal governments in the aggregate; or to the private sector, of $100 million or more. Under Section 205, EPA must select the most cost-effective and least burdensome alternative that achieves the objectives of the rule and is consistent with statutory requirements. Section 203 requires EPA to establish a plan for informing and advising any small governments that may be significantly or uniquely impacted by the rule.

EPA has determined that the approval action promulgated does not include a Federal mandate that may result in estimated costs of $100 million or more to either State, local, or tribal governments in the aggregate, or to the private sector. This Federal action proposes to approve pre-existing requirements under State or local law, and imposes no new Federal requirements. Accordingly, no additional costs to State, local, or tribal governments, or to the private sector, result from this action.

### *D. Submission to Congress and the General Accounting Office*

Under 5 U.S.C. 801(a)(1)(A) as added by the Small Business Regulatory

Enforcement Fairness Act of 1996, EPA submitted a report containing this rule and other required information to the U.S. Senate, the U.S. House of Representatives and the Comptroller General of the General Accounting Office prior to publication of this rule in today's **Federal Register**. This rule is not a ''major rule'' as defined by 5 U.S.C. 804(2).

*E. Petitions for Judicial Review*

Under section 307(b)(1) of the Clean Air Act, petitions for judicial review of this action must be filed in the United States Court of Appeals for the appropriate circuit by June 20, 1997. Filing a petition for reconsideration by the Administrator of this final rule does not affect the finality of this rule for the purposes of judicial review nor does it extend the time within which a petition for judicial review may be filed, and shall not postpone the effectiveness of such rule or action. This action may not be challenged later in proceedings to enforce its requirements. (See section 307(b)(2).)

This action has been classified as a Table 3 action for signature by the Regional Administrator under the procedures published in the **Federal Register** on January 19, 1989 (54 FR 2214–2225), as revised by a July 10, 1995 memorandum from Mary Nichols, Assistant Administrator for Air and Radiation. The Office of Management and Budget (OMB) has exempted this regulatory action from E.O. 12866 review.

**List of Subjects in 40 CFR Part 52**

Environmental protection, Air pollution control, Incorporation by reference, Intergovernmental relations, Particulate matter, Reporting and recordkeeping requirements, Sulfur oxides, Volatile organic compounds.

Dated: April 7, 1997.

**Jack W. McGraw,**

*Acting Regional Administrator.*

Chapter I, title 40 of the Code of Federal Regulations is amended as follows:

## PART 52—[AMENDED]

1. The authority citation for part 52 continues to read as follows:

**Authority:** 42 U.S.C. 7401–7671q.

## Subpart JJ—North Dakota

2. Section 52.1820 is amended by adding paragraph (c)(29) to read as follows:

**§ 52.1820 Identification of plan.**

* * * * *

(c) * * *

(29) The Governor of North Dakota submitted revisions to the North Dakota State Implementation Plan and Air Pollution Control Rules with letters dated August 15, 1995 and January 9, 1996. The revisions address air pollution control rules regarding general provisions; open burning; emissions of particulate matter, certain settleable acids and alkaline substances, and fugitives; air pollution emergency episodes; new source performance standards (NSPS); national emission standards for hazardous air pollutants (NESHAPs); and the minor source construction and operating permit programs. The State's January 9, 1996 submittal also revised SIP Chapter 6, Air Quality Surveillance, to identify current activities regarding visibility monitoring.

(i) Incorporation by reference.

(A) Revisions to the Air Pollution Control Rules as follows: Emissions of Particulate Matter Restricted 33–15–05–03., 33–15–05–03.1., 33–15–05–03.2., and 33–15–05–03.3.; Prevention of Air Pollution Emergency Episodes 33–15–11 Tables 6 and 7; and Fees 33–15–23–01, 33–15–23–02, and 33–15–23–03, effective August 1, 1995.

(B) Revisions to the Air Pollution Control Rules as follows: General Provisions 33–15–01–04; Emission Standards for Hazardous Air Pollutants 33–15–13, except 33–15–13–01–2., Subpart I; Designated Air Contaminant Sources, Permit to Construct, Minor Source Permit to Operate, Title V Permit to Operate 33–15–14–01, 33–15–14–01.1., 33–15–14–02.12., and 33–15–14–03.10.; effective August 1, 1995 and January 1, 1996.

(C) Revisions to the Air Pollution Control Rules as follows: Open Burning Restrictions 33–15–04; Emissions of Certain Settleable Acids and Alkaline Substances Restricted 33–15–09; Standards of Performance for New Stationary Sources 33–15–12; and Restriction of Fugitive Emissions 33–15–17–01 and 33–15–17–02, effective January 1, 1996.

[FR Doc. 97–10126 Filed 4–18–97; 8:45 am]

BILLING CODE 6560–50–P

## DEPARTMENT OF TRANSPORTATION

## Coast Guard

## 46 CFR Part 2

**[CGD 96–067]**

**RIN 2115–AF40**

## Vessel Inspection User Fees

**AGENCY:** Coast Guard, DOT.

**ACTION:** Interim rule with request for comments.

**SUMMARY:** This rule reduces annual vessel inspection user fees for small passenger vessels and exempts publicly owned ferries from payment of vessel inspection user fees. These changes are required by the Coast Guard Authorization Act of 1996. The rule also revises the existing discretionary exemption criteria to allow additional vessels to qualify for exemption from payment of the annual vessel inspection fee. The Coast Guard requests comments on this interim rule.

**DATES:** This rule is effective April 21, 1997. Comments must be received on or before August 19, 1997.

**ADDRESSES:** Comments should be mailed to the Executive Secretary, Marine Safety Council (G–LRA/3406) [CGD 96–067], U.S. Coast Guard Headquarters, 2100 Second Street SW., Washington, DC 20593–0001, or may be delivered to room 3406 at the same address between 9:30 a.m. and 2 p.m., Monday through Friday, except Federal holidays.

The Executive Secretary maintains the public docket for this rulemaking. Comments will becomes part of this docket and will be available for inspection or copying at room 3406, U.S. Coast Guard Headquarters between 9:30 a.m. and 2 p.m., Monday through Friday, except Federal holidays. The telephone number is (202) 267–1477. For inquiries and user fee payment information call, toll free, 1–800–941–3337.

**FOR FURTHER INFORMATION CONTACT:** Denise Mursch, Budget and Resources Division, Office of Planning and Resources, (G–MRP–2) Marine Safety and Environmental Protection (202) 267–0785.

**SUPPLEMENTARY INFORMATION:**

**Request for Comments**

The Coast Guard encourages interested persons to participate in this rulemaking by submitting written data, views, or arguments. Persons submitting comments should include their names and addresses, identify this rulemaking [CGD 96–067] and the specific section of

this rule to which each comment applies, and give the reason for each comment. Please submit two copies of all comments and attachments in an unbound format, no larger than 8½ by 11 inches, suitable for copying and electronic filing. Persons wanting acknowledgement of receipt of comments should enclose stamped, self-addressed postcards or envelopes.

The Coast Guard will consider all comments received during the comment period. It may change this rule in view of the comments.

The Coast Guard plans no public hearing. Persons may request a public hearing by writing to the Marine Safety Council at the address under **ADDRESSES.** The request should include the reasons why a public meeting would be beneficial. If it determines that the opportunity for oral presentations will aid this rulemaking, the Coast Guard will hold a public hearing at a time and placed announced by a later notice in the **Federal Register.**

## Regulatory Information

This rule is being published as an interim rule and is being made effective on the date of publication. The reductions in annual vessel inspection fees for small passenger vessels and the exemption of publicly owned ferries from payment of vessel inspection fees are required by the Coast Guard Authorization Act of 1996. The changes to the discretionary exemption criteria will allow more vessels to qualify for exemption from payment of annual vessel inspection fees and will reduce the financial burden on qualified vessels. For these reasons, the Coast Guard finds good cause, under 5 U.S.C. 553(b) (3) (B) and (d) (3), why notice, and public procedure on the notice, before the effective date of this rule are unnecessary and this rule should be made effective in less than 30 days after publication.

## Regulatory Background

The Omnibus Budget Reconciliation Act of 1990 amended 46 U.S.C. 2110 and removed long-standing prohibitions against imposing certain fees. As amended, 46 U.S.C. 2110 required the establishment and collection of user fees for Coast Guard services provided under Subtitle II of Title 46, United States Code. The Coast Guard subsequently developed user fees for several Subtitle II services, including marine personnel licensing and documentation services, vessel registration and documentation services, and inspection and examination services provided to U.S. and foreign vessels.

The final rule establishing direct user fees for inspection or examination of U.S. and foreign commercial vessels was published in the **Federal Register** (60 FR 13550) on March 13, 1995. That final rule established fees in accordance with the criteria provided under 31 U.S.C. 9701, known as the General User Fee Statute, based on the costs of providing Coast Guard vessel inspection services. These costs included Coast Guard personnel costs associated with the actual time spent inspecting vessels, as well as training, travel, overhead, and other administrative and collection costs.

The published fees for small passenger vessels ranged from $450 for DUKW (wheeled amphibious) vessels to $2,585 for small passenger vessels over 130 feet. The fees for passenger barges less than 100 gross tons (defined as small passenger vessels under 46 CFR 2.10–25) ranged from $825 for barges carrying fewer than 150 passengers to $1,110 for barges carrying 150 or more passengers.

## Discussion of Rules

### *Fee Caps*

The Coast Guard Authorization Act of 1996 (the Act) limits the amounts of the fees that may be charged for vessel inspection services provided to small passenger vessels as defined in 46 CFR 2.10–25. The Act limits the annual fee for small passenger vessels less than 65 feet in length to not more than $300 and for small passenger vessels 65 feet or over in length to not more than $600. Current costs of inspecting small passenger vessels of all lengths exceed the fee limits set by the Act. This rule, therefore, reduces the annual vessel inspection fees for small passenger vessels to the limits established under the Act.

The separate fee categories for DUKW Vessels and Hydrojet Boats were first established because costs for inspecting these vessels were lower than for other small passenger vessel categories. Coast Guard records indicate, however, that all DUKW Vessels and Hydrojet Boats are under 65 feet in length and costs of inspecting these vessels exceed the Act's $300 cap for small passenger vessels under 65 feet. The separate fee categories for these vessels, therefore, are no longer necessary and DUKW Vessels and Hydrojet Boats are included in the category for small passenger vessels less than 65 feet in length in the final rule.

### *Publicly Owned Ferries.*

The Act prohibits the establishment of a fee or charge for inspection or examination under Title 46, U.S. Code, of any publicly owned ferry. Small passenger vessels, passenger ships, and passenger barges currently operating as ferries pay the annual vessel inspection fee for the vessel category to which they belong. No fee category was established specifically for ferries. The term *publicly owned ferry* was not defined within existing law or regulation.

This rule amends 46 CFR 2.10–25 to define the terms *publicly owned, ferry, political subdivision, State, youth,* and *non-profit organization* for the purposes of these regulations and to exempt publicly owned ferries from the provisions of 46 CFR part 2.

The term *publicly owned* is defined for the purposes of these regulations as owned by the federal government or the government of any State or political subdivision thereunder.

The term *ferry* is defined as a vessel transporting passengers or vehicles on a regular run, over the most direct route between a point of embarkation and a point of debarkation on lands separated by a body of water other than an ocean, or between a point of embarkation and an island within the same State.

The term *political subdivision,* as used within the definition of publicly owned, includes county, district, parish, township, city or similar governmental entities established within a State.

As used within this part, the term *State* in accordance with 46 U.S.C. 2101(1)(36) means a State of the United States, Guam, Puerto Rico, the Virgin Islands, American Samoa, the District of Columbia, the Northern Mariana Islands, and any other territory or possession of the Untied States.

The term *Youth* is defined for the purposes of these regulations as an individual 18 years of age or younger.

### *Exemption Criteria*

This rule also revises the exemption criteria in 46 CFR 2.10–5 to allow some non-profit organizations that do not meet the current narrowly-drawn exemption criteria to qualify for exemption from payment of fees. Under current regulations, a vessel must be owned or operated by an organization that is (1) charitable in nature, (2) not for profit, and (3) youth oriented and the vessel must be used exclusively for training youth in boating, seamanship, and navigational skills.

Under 46 U.S.C. 2110(g), exemptions from payment of user fees may be granted whenever it is in the public interest to do so. Since May 1, 1995, the Coast Guard has granted exemptions to only 48 vessels, of which 34 are owned or operated by the Outward Bound Organization, two by the Boy Scouts of

America, and the remainder by a variety of other similar organizations.

At least 29 organizations applied for exemptions but did not meet the exemption criteria. Among those organizations denied exemptions was the Floating Hospital in New York, a charitable, non-profit organization providing medical services to inner city residents of New York City at no cost to the patients. The organization did not meet the exemption criteria because it was not youth-oriented, and did not train youth in boating, navigation, or seamanship. Similarly, a non-profit organization that provided enrichment excursions to individuals with a disability, regardless of their age, did not meet the criteria because it was not specifically youth-oriented.

Requests for exemption were also received from several non-profit organizations providing training to youth aboard the vessels, but which offered a curriculum exceeding the criteria specified under current regulation. Typically, these programs are centered around marine environmental awareness and education. The marine environmental awareness training offered to youth aboard these vessels is a goal that is within the public interest to promote. It is necessary, however, to differentiate between a course in marine environmental studies, and environmental vacations consisting of sightseeing, whale watching, or other excursions for the enjoyment or appreciation of nature.

The term *not for profit corporation* is being changed to the more commonly used terminology of *non-profit organization*. Previously, the term had not been defined. This rule defines the term as an *organization under Internal Revenue Code (I.R.C.) section 501(c) which is exempt for the purposes of federal income taxation.* The Internal Revenue Service requires such organizations to be organized and operated exclusively for one or more of the following purposes: (a) religious; (b) charitable; (c) scientific; (d) testing for public safety; (e) literary; (f) educational; (g) prevention of cruelty to children or animals; or (h) to foster national or international sports. This rule removes the words *charitable in nature* from the exemption criteria because it is already included in the broader term non-profit organization.

The rule also adds *educating youth in a course of marine environmental studies; providing excursions for individuals with a disability; and providing medical services* to the activities in which a qualified vessel may be engaged. The term *disability* means a person having a disability as defined by the Americans with Disabilities Act (ADA) [42 U.S.C. 12102(2)].

## Regulatory Evaluation

This rule is not a significant regulatory action under section 3(f) of Executive Order 12866 and does not require an assessment of potential costs and benefits under section 6(a)(3) of that order. It has not been reviewed by the Office of Management and Budget under that order. It is not significant under the regulatory policies and procedures of the Department of Transportation (DOT) (44 FR 11040; February 26, 1979).

The Coast Guard expects the economic impact of this rule to be so minimal that a full Regulatory Evaluation under paragraph 10e of the regulatory policies and procedures of DOT is unnecessary. The Coast Guard Authorization Act of 1996 (the Act) placed a cap on fees charged for the inspection of small passenger vessels to reduce the economic burden imposed on small businesses. The Act also provided an exemption for publicly-owned ferries from the payment of user fees, which eliminates costs to State, State agencies, and local governments. Implementation of these provisions began on November 1, 1996.

In addition, the current exemption criteria under 46 U.S.C. 2110(g) is being broadened to allow additional exemptions from payments of fees in instances where it is clearly within the public interest to do so.

User fee revenues will be reduced by approximately $2.8 million dollars as a result of the cap on small passenger vessels, exemption of the publicly-owned ferries, and the broadening of the exemption eligibility criteria under 46 U.S.C. 2110(g). The cap on small passenger vessels will affect 5,880 vessels and reduce revenues to the government and provide savings to the small passenger vessel industry in the amount of $2.25 million dollars. The exemption of publicly-owned ferries affects 164 vessels and reduces revenues to the government and provides a savings to the industry in the amount of $480,000 dollars. The broadening of the exemption eligibility is estimated to affect 100 vessels and will reduce revenues to the government and will provide a savings to industry in the amount of $67,000 dollars.

## Small Entities

Under the Regulatory Flexibility Act (5 U.S.C. 601 *et seq.*), the Coast Guard must consider the economic impact on small entities of a rule for which a general notice of proposed rulemaking is required. ''Small entities'' may include (1) small businesses and not-for-profit organizations that are independently owned and operated and are not dominant in their fields; (2) governmental jurisdictions with populations of less than 50,000; and (3) ''small business concern[s]'' as defined by section 3 of the Small Business Act [15 U.S.C. 632(a)]. Small businesses are identified under Standard Industrial Classification codes and size standards in the table following 13 CFR 121.201. This rule does not require a general notice of proposed rulemaking and, therefore, is exempt from the requirements of the Act. Although this rule is exempt, the Coast Guard has reviewed it for potential impact on small entities.

This rule will reduce an existing economic burden on small businesses owning inspected small passenger vessels, or that qualify for the revised exempt status by lowering or eliminating fees they pay for required Coast Guard vessel inspection services. Therefore, the Coast Guard's position is that this rule will not have a significant economic impact on a substantial number of small entities. If, however, you think that your business or organization qualifies as a small entity and that this rule will have a significant economic impact on your business or organization, please submit a comment (see **ADDRESSES**) explaining why you think it qualifies and in what way and to what degree this rule will economically affect it.

## Assistance for Small Entities

In accordance with section 213(a) of the Small Business Regulatory Enforcement Fairness Act of 1996 (Pub. L. 104–121), the Coast Guard will provide assistance to small entities to determine how this rule applies to them. If you are a small business and need assistance understanding the provisions of this rule or applying for an exemption under this rule, please contact your local Officer in Charge, Marine Inspection (OCMI) or call, toll free, 1–800–941–3337.

## Collection of Information

This rule contains no new collection-of-information requirements under the Paperwork Reduction Act (44 U.S.C. 3501 *et seq.*).

## Federalism

The Coast Guard has analyzed this rule under the principles and criteria contained in Executive Order 12612 and has determined that this rule does not have sufficient federalism implications to warrant the preparation of a

Federalism Assessment. This rule amends user fees for vessel inspection and examination services to cap fees paid for services related to small passenger vessels, and exempts publicly owned ferries from payment of the fees.

**Unfunded Mandates**

Under the Unfunded Mandates Reform Act (Pub. L. 104–4) (the ACT), the Coast Guard must consider whether this Interim Rule will result in an annual expenditure by State, local, and tribal governments, in the aggregate, or by the private sector, of $100 million (adjusted annually for inflation). Section 205 of the Act also that the Coast Guard identify and consider a reasonable number of regulatory alternates, and from those alternatives, select the least costly, most cost-effective, or least burdensome alternative that achieves the objective of this Interim Rule. The rule does not impose additional costs upon any State or local government as a result of a mandate imposed upon them as a government agency. The completed analysis estimates that this Interim rule will provide a total savings of $2.8 million dollars. This rule will result in the reduction or elimination of fees paid by State, State agencies, and local governments for inspection services provided to these categories of vessels owned by such entities.

**Environment**

The Coast Guard considered the environmental impact of this rule and has concluded that, under paragraph 2.B.2 of Commandant Instruction M16475.1B, this rule is categorically excluded from further environmental documentation. Paragraph 2.,B.2 of that instruction excludes administrative actions and procedural regulations and policies that clearly do not have any environmental impacts. A ''Categorical Exclusion Determination'' is available in the docket for inspection or copying where indicated under **ADDRESSES**.

**List of Subjects in 46 CFR Part 2**

Fees, Marine safety, Vessels.

For the reasons set out in the preamble, the Coast Guard amends 46 CFR part 2 as follows:

## PART 2—VESSELS INSPECTIONS

1. The authority citation for part 2 is revised to read as follows:

**Authority:** 14 U.S.C. 664; 31 U.S.C. 9701; 33 U.S.C. 1903; 43 U.S.C. 1333, 1356; 46 U.S.C. 2110, 3306, 3703; E.O. 12234, 45 FR 58801, 3 CFR 1980 Comp., p. 277; 49 CFR 1.46; Subpart 2.45 also issued under the authority of Act Dec 27, 1950, Ch 1155, sections 1, 2, 64 Stat. 1120 [see 46 U.S.C. App. Note prec. 1].

2. In § 2.10–1, paragraph (b) is revised to read as follows:

**§ 2.10–1 Applicability.**

* * * * *

(b) The fees in this subpart do not apply to:

(1) Vessels being inspected for the initial issuance of a Certificate of Inspection;

(2) Foreign passenger vessels;

(3) Training vessels operated by State maritime academies;

(4) Public vessels of the United States except for Maritime Administration vessels; and

(5) Publicly owned ferries.

3. Section 2.10–5 is revised to read as follows:

**§ 2.10–5 Exemptions.**

(a) Vessels owned or operated by a non-profit organization may be exempted from payment of the fees required by this subpart, only if the vessel is used exclusively for one or more of the following:

(1) Training youth in boating, seamanship, or navigation skills;

(2) Educating youth in a course of marine environmental studies;

(3) Providing excursions for persons with disabilities as defined under the Americans with Disabilities Act (ADA) [42 U.S.C. 12102(2)]; or

(4) Providing medical services.

(b) Vessels owned or operated by the Federal government or the government of any State or political subdivision thereunder may be exempted from the fees required by this subpart provided the vessel is used exclusively for one or more of the purposes listed in paragraph (a) of this section.

(c) The term *used exclusively* in paragraphs (a) and (b) of this section does not preclude:

(1) the carriage of adult volunteers or crew, or

(2) the vessel's use for fund raising activities without regard to the age of the participants aboard the vessel, provided revenues raised are for the operation and maintenance of the vessel and that such fund raisers are held no more frequently than once a month.

(d) Vessel owners or operators may submit a written request for exemption to the Officer in Charge, Marine Inspection, of the Marine Inspection Zone in which the vessel normally operates. The exemption request must provide the vessel name, the vessel identification number, and evidence that the organization and the vessel meet the criteria set forth in this section.

4. Section 2.10–25 is amended by adding in alphabetical order new definitions for *Ferry, Non-profit organization, Political subdivision, Publicly owned, State* and *Youth,* to read as follows:

**§ 2.10–25 Definitions.**

* * * * *

*Ferry* means, a vessel transporting passengers or vehicles on a regular run, over the most direct route between a point of embarkation and a point of debarkation on lands separated by a body of water other than an ocean, or between a point of embarkation and an island within the same State.

* * * * *

*Non-profit organization* means an organization under Internal Revenue Code (I.R.C.) section 501(c) which is exempt for the purposes of federal income taxation.

* * * * *

*Political subdivision* means a county, district, parish, township, city or similar governmental entity established within a State.

*Publicly owned* means, owned by (1) the federal government, or (2) the government of any State or political subdivision thereunder.

* * * * *

*State* means a State of the United States, Guam, Puerto Rico, the Virgin Islands, American Samoa, the District of Columbia, the Northern Mariana Islands and any other territory or possession of the United States.

* * * * *

*Youth* means an individual 18 years of age or younger.

* * * * *

5. In table 2.10–101, the entries for *Passenger Barges* and for *Small Passenger Vessels* are revised to read as follows:

TABLE 2.10–101.—ANNUAL VESSEL INSPECTION FEES FOR U.S. AND FOREIGN VESSELS REQUIRING CERTIFICATE OF INSPECTION

| | | | | | | |
|---|---|---|---|---|---|---|
| * | * | * | * | * | * | * |
| Passenger Barges: | | | | | | |

TABLE 2.10–101.—ANNUAL VESSEL INSPECTION FEES FOR U.S. AND FOREIGN VESSELS REQUIRING CERTIFICATE OF INSPECTION—Continued

| | |
|---|---|
| Less than 100 gross tons and: | |
| Less than 65 feet in length | 300 |
| 65 feet or more in length | 600 |
| 100 gross tons or more and: | |
| Certified for fewer than 150 passengers | 2,215 |
| Certified for 150 or more passengers | 2,525 |
| * * * * * * * | |
| Small Passenger Vessels: | |
| Less than 65 feet in length | 300 |
| 65 feet or more in length | 600 |
| * * * * * * * | |

Dated: March 21, 1997.

**J.C. Card,**

*Rear Admiral, U.S. Coast Guard, Assistant Commandant for Marine Safety and Environmental Protection.*

[FR Doc. 97–10231 Filed 4–18–97; 8:45 am]

BILLING CODE 4910–14–M

## DEPARTMENT OF TRANSPORTATION

## Office of the Secretary

## 49 CFR Part 6

**[Docket No. OST–96–1421]**

**RIN 2105–AB73**

## Implementation of Equal Access to Justice Act in Agency Proceedings

**AGENCY:** Office of the Secretary, DOT.

**ACTION:** Final rule.

**SUMMARY:** The Department of Transportation is updating its regulation concerning the Equal Access to Justice Act to reflect current statutory requirements. The change is made on the Department's initiative in response to the President's Regulatory Reinvention Initiative.

**DATES:** This rule is effective May 21, 1997.

**FOR FURTHER INFORMATION CONTACT:** Alexander J. Millard, Office of the General Counsel, U.S. Department of Transportation, 400 Seventh Street, SW., Room 4102, Washington, DC 20590, telephone (202) 366–9285, or S. Reid Alsop, Office of the Chief Counsel, Federal Highway Administration, U.S. Department of Transportation, 400 Seventh Street, SW., Room 4230, Washington, DC 20590, telephone (202) 366–1371.

**SUPPLEMENTARY INFORMATION:** On June 6, 1996, the Department published a notice of proposed rulemaking (NPRM) in the **Federal Register** (at 61 FR 28831) proposing to update its regulation (49 CFR part 6) providing for the award of attorney fees and other expenses under the Equal Access to Justice Act to eligible individuals and entities who are parties to certain administrative proceedings before the Department and its various operating administrations. No comments were filed in response to this NPRM. The Department is, therefore, adopting the proposal with only minor editorial corrections in § 6.5.

### Regulatory Analyses and Notices

This final rule is considered to be a non-significant rulemaking under DOT's regulatory policies and procedures, 44 FR 11034. The final rule was not subject to review by the Office of Information and Regulatory Affairs pursuant to Executive Order 12866.

The impact of this rule is so minimal that no further regulatory evaluation has been prepared. Indeed, the changes that are being made merely track various statutory changes that have been enacted since the Department's adoption of its original final rule in 1983.

The final rule has been analyzed in accordance with the principles and criteria contained in Executive Order 12612, and it has been determined that it does not have sufficient federalism implications to warrant the preparation of a Federalism Assessment. I certify that this rule will not have a significant economic impact on a substantial number of small entities. This rule is merely updating the regulation to reflect current statutory requirements. Finally, the rule will not result in any unfunded mandate to state, local or tribal governments in the aggregate, or to the private sector, of $100 million or more in any one year.

### List of Subjects in 49 CFR Part 6

Claims, Equal access to justice, Transportation Department.

For the reasons discussed in the preamble, 49 CFR part 6 is hereby amended to read as follows:

## PART 6—IMPLEMENTATION OF EQUAL ACCESS TO JUSTICE ACT IN AGENCY PROCEEDINGS

1. The authority citation for part 6 is revised to read as follows:

**Authority:** 5 U.S.C. 504; 28 U.S.C. 2412.

**§ 6.1 [Amended]**

2. Section 6.1 is amended by removing the second sentence.

3. Section 6.3 is revised to read as follows:

**§ 6.3 Applicability.**

Section 6.9(a) applies to any adversary adjudication pending before the Department on or after October 1, 1981. In addition, applicants for awards must also meet the standards of § 6.9(b) for any adversary adjudication commenced on or after March 29, 1996.

4. In § 6.5, paragraph (a) is revised to read as follows:

**§ 6.5 Proceedings covered.**

(a) The Act applies to adversary adjudications conducted by the Department of Transportation. These are adjudications under 5 U.S.C. 554 in which the position of the Department is represented by an attorney or other representative who enters an appearance and participates in the proceeding. Coverage of the Act begins at designation of a proceeding or issuance of a charge sheet. Any proceeding in which the Department may prescribe or establish a lawful present or future rate is not covered by the Act. Proceedings to grant or renew licenses are also excluded, but proceedings to modify, suspend, or revoke licenses are covered if they are otherwise ''adversary adjudications.'' For the Department of Transportation, the types of proceedings covered include, but may not be limited to: Coast Guard suspension or revocation of licenses, certificates or documents under 46 U.S.C. 7701 et seq.; Coast Guard class II civil penalty proceedings

under the Clean Water Act, 33 U.S.C. 1321(b)(6)(B)(ii); Coast Guard class II penalty proceedings under the Comprehensive Environmental Response, Compensation and Liability Act, 42 U.S.C. 9609(b); suspension and revocation of Certificates of Registry proceedings for Great Lakes Pilots pursuant to 46 CFR Part 401; National Highway Traffic Safety Administration (NHTSA) automotive fuel economy enforcement under 49 U.S.C. Chapter 329 (49 CFR Part 511); Federal Highway Administration (FHWA) enforcement of motor carrier safety regulations under 49 U.S.C. 521 and 5123 (49 CFR 386); the Department's aviation economic enforcement proceedings conducted by its Office of Aviation Enforcement and Proceedings pursuant to 49 U.S.C. Subtitle VII, 14 CFR Chapter II. Also covered are any appeal of a decision made pursuant to section 6 of the Contract Disputes Act of 1978 (41 U.S.C. 605) before an agency board of contract appeals as provided in section 8 of that Act (41 U.S.C. 607), any hearing conducted under Chapter 38 of title 31, and the Religious Freedom Restoration Act of 1993, 42 U.S.C. 2000bb et seq.

* * * * *

5. In § 6.7, paragraph (a) is amended by removing the citation ''5 U.S.C. 551(3)'' and adding the citation ''5 U.S.C. 504(b)(1)(B)''; paragraph (b)(1) is amended by removing the words ''1 million'' and adding the words ''2 million''; paragraphs (b)(2) and (b)(5) are amended by removing the words ''5 million'' and adding the words ''7 million''; and paragraph (b)(6) is added to read as follows:

**§ 6.7 Eligibility of applications.**

* * * * *

(b)(6) For the purposes of § 6.9(b), eligible applicants include small entities as defined in 5 U.S.C. 601.

* * * * *

6. In § 6.9, paragraphs (a) and (b) are revised and paragraphs (c) and (d) are added to read as follows:

**§ 6.9 Standards for awards.**

(a) An eligible applicant may receive an award for fees and expenses incurred by that party in connection with a decision in favor of the applicant in a proceeding covered by this Part, unless the position of the Department over which the applicant has prevailed was substantially justified or special circumstances make the award sought unjust. The burden of proof that an award should not be made to an eligible applicant is on the Department where it has initiated the proceeding. No presumption arises that the Department's position was not substantially justified simply because the Department did not prevail. Whether or not the position of the Department was substantially justified shall be determined on the basis of the administrative record, as a whole, in the adversary adjudication for which fees and other expenses are sought. The ''position of the Department'' means, in addition to the position taken by the agency in the adversary adjudication, the action or failure to act by the Department upon which the adversary adjudication may be based.

(b) In the context of a Departmental proceeding to enforce a party's compliance with a statutory or regulatory requirement, if the demand by the Department is substantially in excess of the amount awarded to the government pursuant to the decision of the adjudicative officer and is unreasonable when compared with such decision, under the facts and circumstances of the case, the adjudicative officer shall award to an eligible applicant party the fees and expenses related to defending against the excessive demand, unless the applicant party has committed a willful violation of law or otherwise acted in bad faith, or special circumstances make an award unjust. Fees and expenses awarded under this paragraph shall be paid only as a consequence of appropriations provided in advance. As used in this section, ''demand'' means the express demand of the Department which led to the adversary adjudication, but does not include a recitation by the Department of the maximum statutory penalty (I) in the administrative complaint, or (ii) elsewhere when accompanied by an express demand for a lesser amount.

(c) The decision of the Department on the application for fees and other expenses shall be the final administrative decision under this section.

(d) An award will be reduced or denied if the applicant has unduly or unreasonably protracted the proceeding.

**§ 6.11 [Amended]**

7. In § 6.11, paragraph (b) is amended by removing the figure ''$75.00'' and adding the figure ''$125.00''.

**§ 6.25 [Amended]**

8. In § 6.25, paragraph (c) is amended by removing the words ''an identify'' and adding words ''and identify''.

Issued this 24th day of March 1997 at Washington, DC.

**Rodney E. Slater,**

*Secretary of Transportation.*

[FR Doc. 97–10192 Filed 4–18–97; 8:45 am]

BILLING CODE 4910–62–P

## DEPARTMENT OF TRANSPORTATION

### Federal Railroad Administration

### 49 CFR Part 214

**[FRA Docket No. RSOR 13, Notice No. 10]**

**RIN 2130–AA86**

## Roadway Worker Protection

**AGENCY:** Federal Railroad Administration (FRA), Department of Transportation (DOT).

**ACTION:** Final rule; response to petitions for reconsideration.

**SUMMARY:** On December 16, 1996, FRA published its Final Rule on Roadway Worker Protection (61 FR 65959), which was the product of the agency's first regulatory negotiation. This rule promulgates standards to protect roadway workers while working on or near railroad tracks. In this document, FRA responds to concerns raised by two parties in petitions for reconsideration of the final rule.

**EFFECTIVE DATE:** January 15, 1997.

**FOR FURTHER INFORMATION CONTACT:** Gordon A. Davids, P.E., Bridge Engineer, Office of Safety, FRA, 400 Seventh Street S.W., Room 8326, Washington, D.C. 20590 (telephone: 202–632–3340); Grady Cothen, Deputy Associate Administrator for Safety Standards and Program Development, FRA, 400 Seventh Street S.W., Washington, D.C. 20590 (telephone: 202–632–3309); or Cynthia Walters, Trial Attorney, Office of Chief Counsel, FRA, 400 Seventh Street S.W., Room 8201, Washington, D.C. 20590 (telephone 202–632–3188).

**SUPPLEMENTARY INFORMATION:** On December 16, 1996, FRA published its final rule on Roadway Worker Protection which established standards for the protection of roadway workers who are working on or about railroad track. This rule represents the efforts of an Advisory Committee chartered to conduct FRA's first negotiated rulemaking. On January 6, 1997, the Association of American Railroads filed a petition for reconsideration of the final rule. The AAR's petition specifically alleges:

- Section 214.337 of the final rule imposes significant additional costs on the railroad industry without commensurate safety gains;
- The Advisory Committee did not participate in the economic evaluation of the final rule; and
- FRA has failed to provide a reasoned response to a significant concern raised on the record by AAR and its members.

On February 11, 1997, the American Public Transit Association also filed a petition for reconsideration of the final rule. APTA's petition specifically alleges:

- APTA's commuter rail members will not be able to comply with the regulations by the March 15, compliance date and urges FRA to extend the date to September 15 for commuter railroads.
- APTA urges FRA to reconsider the use of restricted speed in yards and interlockings as a form of on track safety protection; and
- APTA urges FRA to reconsider section 214.337 by allowing lone workers to perform visual inspections within interlockings and control point limits when trains are operating at restricted speed.

**A. Procedural Issues**

Petitions for reconsideration to the Administrator must be filed in accordance with 49 CFR 211.29(a), which requires:

> Except for good cause shown, such a petition must be submitted not later than 60 days after publication of the rule in the **Federal Register**, or 10 days prior to the effective date of the rule, whichever is the earlier. (49 CFR 211.29(a)).

The effective date for this rule was January 15, 1997, making the appropriate filing deadline January 5, 1997, 10 days prior to the effective date. Since the filing deadline fell on a weekend, all petitions were to be filed by the next business day, Monday, January 6. APTA's petition, was filed on February 11, more than 30 days after the appropriate filing deadline. In accordance with the regulation, late filers are expected to show good cause. APTA's petition, however, fails to set forth an argument for such good cause. Despite APTA's untimely filing and lack of good cause shown, FRA is addressing the substance of the petition in this response.

**B. The AAR's Concerns**

The petition submitted by the AAR addressed 3 major concerns which require reconsideration of one provision, § 214.337, On Track Safety Procedures for Lone Workers. The AAR asserts the following:

*1. The Final Rule Imposes Significant Additional Costs on the Railroad Industry Without Commensurate Safety Gains*

This allegation is in reference to § 214.337's prohibition on the use of individual train detection as protection for lone workers in interlockings, controlled points, and remotely controlled hump yards. The AAR contends that the final rule should be modified to allow lone workers to perform inspections and minor correction work within controlled points, manual interlockings or remotely controlled hump yards while using individual train detection at locations where sight distance, background noise and adjacent track constraints pose no threat to safety. The AAR's argument essentially reiterates the argument set forth by Norfolk Southern Railway (Norfolk Southern) in its comment to the docket. This comment was addressed during the Advisory Committee's final meeting which was dedicated to the discussion of comments to the NPRM. During that meeting, the Advisory Committee could not reach consensus to reopen this issue despite Norfolk Southern's explanation of its concern.

The AAR acknowledges sending an August 23rd letter to the docket, after the committee met. In that letter, the AAR articulated the same arguments that it now presents in its petition. The AAR maintains that this prohibition will create situations where roadway workers will simply forgo inspection. The AAR also contends that this prohibition is unnecessary, since lone workers have a right to get more restrictive protection when they believe it is necessary. The AAR also argues that any railroad is generally free to adopt more restrictive measures making it unnecessary and excessive to include such measures in the final rule. Finally, the AAR contends that there are no fatality data involving a lone worker, trained in roadway worker protection, inspecting in a controlled point, manual interlocking or remotely controlled hump yard.

FRA independently analyzed the claims presented by the AAR in that letter and the cost data used to support them. FRA agreed with the Advisory Committee, which reached consensus after much debate that there are sound safety reasons to restrict a lone worker's use of individual train detection, and articulated that reasoning in the preamble to the final rule. Since individual train detection does not ensure that a train will not operate over the track, FRA has limited the use of this method of on-track safety to instances where the risks associated with the roadway work environment are minimal. FRA provided data indicating that manual interlockings, controlled points and remote controlled hump yards are not locations of low risk for roadway workers. Eleven (11) fatalities occurred between 1989 and 1995, in these locations and in situations virtually analogous to lone workers utilizing individual train detection. Although these workers were technically members of a work group, they were performing tasks by themselves and responsible for protecting themselves. Many of these roadway workers had recently undergone rules training and had the option to request additional forms of protection. Despite recent training and the option for more protection, 11 roadway workers were killed. The AAR is simply mistaken when it contends that there are no safety gains flowing from this restriction.

The AAR further contends that due to the burdensome nature of these restrictions, the frequency of inspections will decrease in interlockings and controlled points. It is important to note that there are Federal regulations requiring both track and signal inspections. These regulations establish minimum inspection frequencies and safety standards for track and signal.

In addition to Federal standards, railroads often have their own internal mandates requiring certain track and signal inspections. FRA believes that the new roadway worker protection standards will have no impact on these inspections, since they are required by either Federal regulation or railroad rule in order to maintain a minimum level of safety. However, as always, FRA will not hesitate to employ enforcement measures for any of its regulations, if non-compliance is discovered.

Finally, the AAR's petition included a cost analysis asserting that this provision is far too expensive. FRA did not find this assertion persuasive. First, the AAR did not provide critical assumptions used in conducting its analysis, making it difficult to provide a reasoned response to the AAR's contentions. For example, FRA's calculations used in the Regulatory Impact Analysis pertained to additional cost burdens. In many instances, railroads are already providing some sort of protection. It is not clear that the AAR has calculated only costs associated with providing additional on-track safety protection. The enormity of the number the AAR used in connection with lone workers would seem to indicate that the figure represents the cost of total man hours to provide on-track safety for lone workers at interlockings, controlled points and remotely controlled hump yards, not the additional cost of man hours for providing on-track safety for lone workers at interlockings and controlled points. The AAR's petition did not specify which method of protection was

used for their cost estimate. It appears that the AAR calculated their costs by using more expensive methods of on-track safety protection than FRA used. Perhaps the most puzzling portion of this cost analysis is the sparse detail offered to explain how the cost of this provision increased from $2,847,586 for one railroad to $12,000,000 for the industry. Given the AAR's cost estimate, one railroad represents 24 percent of the industry's costs. This figure defies FRA's understanding of the industry, since no railroad represents such a significant share. After careful consideration and for the reasons set forth above, FRA has decided not to modify this provision.

*2. The Advisory Committee Did Not Participate in the Economic Evaluation of the Final Rule*

FRA finds puzzling the AAR's desire to have its economic concern addressed in a petition for reconsideration to the final rule. The AAR seems to take issue with the conclusions reached in the analysis. The AAR concludes that the rule is based fully or partially on false premises. The AAR expresses the belief that had they participated in the development, methodology, or assumptions used in the Regulatory Impact Analysis, the resulting document would have been more accurate.

FRA contends that the Regulatory Impact Analysis was never intended to be part of this Regulatory Negotiation. FRA's Notice proposing the formation of a negotiated rulemaking committee discussed ''key issues for negotiation.'' (59 FR 42203) FRA did not anticipate the Regulatory Impact Analysis itself being a topic for negotiation. Nor did FRA receive any comments to the initial notice suggesting that the analysis be considered a key issue for negotiation.

Most important, FRA stands firmly behind the methodology and conclusions reached in its analysis. The methodology used is consistently employed by this agency and renders accurate results. In addition, Advisory Committee members were included in surveys providing information which formed the basis of significant portions of the analysis. FRA also used data that are routinely provided to the agency by the various railroads themselves.

Lastly, FRA believes that each railroad is in the best position to determine how proposed safety standards will affect them. Committee members were expected to independently weigh the benefits and burdens of proposed standards for the interests that they represent, during the course of the negotiations. Participation in formulating FRA's regulatory impact analysis should not have had a significant effect on any party warranting reconsideration of the rule. Negotiated rulemaking theory assumes that parties will examine the impact of rule provisions on their interest as they negotiate and it assumes that given that self-examination, no party would reach consensus on issues that have a severe detrimental impact on them. The consensus reached at the NPRM stage was not a consensus pending review of the Regulatory Impact Analysis, but a solid consensus on recommended rule text for minimum standards in the area of Roadway Worker Protection.

*3. FRA has Failed To Provide a Reasoned Response to a Significant Concern Raised on the Record by the AAR and its Members*

FRA addressed all comments to the docket in the preamble to the Final Rule. The AAR is mistaken when it asserts that FRA did not provide a reasoned response to its concerns. There was an entire section of the preamble dedicated to the issues of *Restricted Speed and Lone Workers.* FRA considered the AAR's comment and did not find it persuasive for safety reasons. FRA also determined that the provision would not be modified in accordance with the AAR's suggestion. In addition, a portion of the Regulatory Impact Analysis was devoted to the economic concerns presented by the AAR. FRA has clearly provided a reasoned response for its decision against incorporating changes suggested by the AAR.

**C. APTA's Concerns**

APTA's petition addressed 3 major concerns also. APTA asserts the following:

*1. APTA Requests to Extend the Compliance Date for Commuter Railroads to September 15*

APTA expressed concern regarding meeting the March 15 compliance date for commuter railroads. APTA's petition acknowledges full participation in the regulatory negotiation process. APTA members had a good understanding of the NPRM recommended by the Advisory Committee and participated in the discussion regarding suggested changes that had been submitted in the form of comments to the docket. In fact, APTA members were fully aware that beginning last spring, many class 1 railroads had voluntarily implemented on-track safety measures similar to those recommended in the NPRM. Despite full participation in the process, and full knowledge of the standards that were likely to get published, it appears as though these measures come unexpectedly to some commuter railroads. FRA finds surprising the need for a 6-month extension for a significant portion of the railroad industry on the basis of training when at least portions of the on-track safety program can be implemented with very little training. In addition, FRA has received correspondence from at least one commuter railroad indicating that it would be in full compliance by March 15. FRA believes that issues regarding the compliance date are best handled through the waiver process, since there is no compelling reason to change the compliance date for all commuter railroads. At present, FRA has received waiver petitions from several commuter railroads and is committed to provide expedited service on these petitions. After careful consideration and for the reasons set forth above, FRA has decided not to extend the compliance date for all commuter railroads and will address the individual requests for extension through the waiver process.

*2. APTA Requests that Restricted Speed be as a Form of On-Track Safety Protection in Yards and Interlockings*

The issue of whether the use of restricted speed, alone, would constitute on-track safety surfaced during the regulatory negotiation. The parties to the negotiation determined that restricted speed would not constitute on-track safety protection. FRA articulated its belief that unusual circumstances in certain locations where this measure or others might be considered sufficient to constitute on-track safety protection, would have to be addressed by the waiver process. FRA felt that it would be necessary to consider the unique qualities of each operation in order to determine the merits of a waiver petition regarding whether restricted speed could be considered on-track safety protection. After careful consideration and for the sound safety reasons, FRA has also decided not to consider restricted speed a form of on-track safety protection and to also address this issue through the waiver process.

*3. APTA Requests That Lone Workers Be Allowed to use Individual Train Detection as a Form of Protection While Conducting Visual Inspections Within Interlockings and Controlled Points When Trains are Operating at Restricted Speed*

APTA's concern regarding lone workers was discussed during the regulatory negotiation and the comment period following publication of the NPRM. FRA included a detailed

discussion of these comments in the preamble to the final rule. (61 FR 65062) APTA's request also pertains to § 214.337, but is slightly different than the AAR's, since trains in this instance will be operating at restricted speed. Despite this difference, FRA's safety reasoning is the same. FRA and the committee were not willing to carve out an exception for lone workers using individual train detection at interlockings and controlled points, even if trains are operating at restricted speed. FRA continues to believe that sound safety principles limit the use of individual train detection. APTA members have also addressed this issue through waiver petitions, which is again the best forum for such concerns. After careful consideration and for the reasons set forth above, FRA has decided not to change § 214.337's prohibition on the use of individual train detection.

Issued this 15th day of April 1997.

**Jolene M. Molitoris,**

*Administrator, Federal Railroad Administration.*

[FR Doc. 97–10230 Filed 4–18–97; 8:45 am]

BILLING CODE 4910–06–P

# Proposed Rules

Federal Register
Vol. 62, No. 76
Monday, April 21, 1997

This section of the FEDERAL REGISTER contains notices to the public of the proposed issuance of rules and regulations. The purpose of these notices is to give interested persons an opportunity to participate in the rule making prior to the adoption of the final rules.

## DEPARTMENT OF TRANSPORTATION

## Federal Aviation Administration

## 14 CFR Part 71

**[Airspace Docket No. 97–AWP–9]**

## Proposed Revocation of Class E Airspace; El Rico, CA

**AGENCY:** Federal Aviation Administration (FAA), DOT.

**ACTION:** Notice of proposed rulemaking.

**SUMMARY:** This notice proposes to revoke the Class E airspace at El Rico, CA. The cancellation of instrument approach procedures at El Rico Airport has made this action necessary. The intended effect of this action is to revoke controlled airspace since the purpose and requirements for the airspace area no longer exist at El Rico Airport, El Rico, CA.

**DATES:** Comments must be received on or before May 15, 1997.

**ADDRESSES:** Send comments on the proposal in triplicate to: Federal Aviation Administration, Attn: Manager, Operations Branch, AWP–530, Docket No. 97–AWP–9, Air Traffic Division, P.O. Box 92007, Worldway Postal Center, Los Angeles, California, 90009.

The official docket may be examined in the Office of the Assistant Chief Counsel, Western Pacific Region, Federal Aviation Administration, Room 6007, 15000 Aviation Boulevard, Lawndale, California, 90261.

An informal docket may also be examined during normal business at the Office of the Manager, Operations Branch, Air Traffic Division at the above address.

**FOR FURTHER INFORMATION CONTACT:** William Buck, Airspace Specialist, Operations Branch, AWP–530, Air Traffic Division, Western-Pacific Region, Federal Aviation Administration, 15000 Aviation Boulevard, Lawndale, California, 90261, telephone (310) 725–6556.

**SUPPLEMENTARY INFORMATION:**

### Comments Invited

Interested parties are invited to participate in this proposed rulemaking by submitting such written data, views, or arguments at they may desire. Comments that provide the factual basis supporting the views and suggestions presented are particularly helpful in developing reasoned regulatory decisions on the proposal. Comments are specifically invited on the overall regulatory, aeronautical, economic, environmental, and energy-related aspects of the proposal. Communications should identify the airspace docket number and be submitted in triplicate to the address listed above. Commenters wishing the FAA to acknowledge receipt of their comments on this notice must submit with the comments a self-addressed, stamped postcard on which the following statement is made: ''Comments to Airspace Docket No. 97–AWP–9.'' The postcard will be date/time stamped and returned to the commenter. All communications received on or before the specified closing date for comments will be considered before taking action on the proposed rule. The proposal contained in this notice may be changed in light of comments received. All comments submitted will be available for examination in the Operations Branch, Air Traffic Division, at 15000 Aviation Boulevard, Lawndale, California 90261, both before and after the closing date for comments. A report summarizing such substantive public contact with FAA personnel concerned with this rulemaking will be filed in the docket.

### Availability of NPRM

Any person may obtain a copy of this Notice of Proposed Rulemaking (NPRM) by submitting a request to the Federal Aviation Administration, Operations Branch, P. O. Box 92007, Worldway Postal Center, Los Angeles, California 90009. Communications must identify the notice number of this NPRM. Persons interested in being placed on a mailing list for future NPRM's should also request a copy of Advisory Circular No. 11–2A, which describes the application procedures.

### The Proposal

The FAA is considering an amendment to part 71 of the Federal Aviation Regulations (14 CFR part 71) revoking the Class E airspace area at El Rico, CA. The cancellation of instrument approach procedures at El Rico Airport has made this action necessary. The intended effect of this action is to revoke controlled airspace since the purpose and requirements for the airspace area no longer exist at El Rico Airport, El Rico, CA. Class E airspace designations are published in paragraph 6005 of FAA Order 7400.9D dated September 4, 1996, and effective September 16, 1996, which is incorporated by reference in 14 CFR 71.1. The Class E airspace designations listed in this document would be removed subsequently in this Order.

The FAA has determined that this proposed regulation only involves an established body of technical regulations for which frequent and routine amendments are necessary to keep them operationally current. Therefore, this proposed regulation—(1) is not a ''significant regulatory action'' under Executive Order 12866; (2) is not a ''significant rule'' under DOT Regulatory Policies and Procedures (44 FR 10034; February 26, 1979); and (3) does not warrant preparation of a Regulatory Evaluation as the anticipated impact is so minimal. Since this is a routine matter that will only affect air traffic procedures and air navigation, it is certified that this proposed rule would not have a significant economic impact on a substantial number of small entities under the criteria of the Regulatory Flexibility Act.

### List of Subjects in 14 CFR Part 71

Airspace, Incorporation by reference, Navigation (air).

### The Proposed Amendment

In consideration of the foregoing, the Federal Aviation Administration proposes to amend 14 CFR part 71 as follows:

## PART 71—[AMENDED]

1. The authority citation for 14 CFR part 71 continues to read as follows:

**Authority:** 49 U.S.C. 106(g), 40103, 40113, 40120; E.O. 10854, 24 FR 9565, 3 CFR, 1959–1963 Comp., p. 389; 14 CFR 11.69.

**§ 71.1 [Amended]**

2. The incorporation by reference in 14 CFR 71.1 of the Federal Aviation Administration Order 7400.9D, Airspace

Designations and Reporting Points, dated September 4, 1996, and effective September 16, 1996, is amended as follows:

*Paragraph 6005 Class E airspace.*

* * * * *

**AWP CA E5 El Rico, CA [Removed]**

* * * * *

Issued in Los Angeles, California, on April 4, 1997.

**Sabra W. Kaulia,**

*Acting Manager, Air Traffic Division, Western-Pacific Region.*

[FR Doc. 97–10153 Filed 4–18–97; 8:45 am]

BILLING CODE 4910–13–M

---

## DEPARTMENT OF TRANSPORTATION

## Coast Guard

## 33 CFR Part 100

**[CGD 05–97–012]**

**RIN 2115–AE46**

## Special Local Regulations for Marine Events; Assateague Channel, Chincoteague, Virginia

**AGENCY:** Coast Guard, DOT.

**ACTION:** Notice of proposed rulemaking.

**SUMMARY:** The Coast Guard proposes to amend permanent special local regulations established for an annual marine event held in the Assateague Channel, Chincoteague, Virginia by including an additional event for which the regulated area will be in effect. This action is intended to update the regulation in order to enhance the safety of life and property during the events.

**DATES:** Comments must be received on or before June 20, 1997.

**ADDRESSES:** Comments may be mailed to Commander (Aosr), Fifth Coast Guard District, 431 Crawford Street, Portsmouth, Virginia 23704–5004, or hand delivered to Room 516 at the same address between 7:30 a.m. and 5 p.m., Monday through Friday, except Federal holidays. The telephone number is (757) 398–6204. Comments will become part of this docket and will be available for inspection and copying at the above address.

**FOR FURTHER INFORMATION CONTACT:** S.L. Phillips, Project Manager, Search and Rescue Branch, at (757) 398–6204.

**SUPPLEMENTARY INFORMATION:**

### Request for Comments

The Coast Guard encourages interested persons to participate in this rulemaking by submitting written views, data, or arguments. Persons submitting comments should include their names and addresses, identify this rulemaking (CGD 05–97–012) and the specific section of this proposal to which each comment applies, and give the reason for each comment. Please submit two copies of all comments and attachments in an unbound format, no larger than 8½ by 11 inches, suitable for copying and electronic filing. Persons wanting acknowledgment of receipt of comments should enclose stamped, self-addressed postcards or envelopes.

The Coast Guard will consider all comments received during the comment period. It may change this proposal in view of the comments. The Coast Guard plans no public hearing. Persons may request a public hearing by writing to the address listed under **ADDRESSES**. The request should include the reasons why a hearing would be beneficial. If it determines that the opportunity for oral presentations will aid this rulemaking, the Coast Guard will hold a public hearing at a time and place announced by a later notice in the **Federal Register**.

### Background and Purpose

The current regulations at 33 CFR 100.519 establish special local regulations for the Pony Penning Swim, a marine event held annually in the Assateague Channel, Chincoteague, Virginia. Since the promulgation of 33 CFR 100.519, an additional marine event, the Chincoteague Power Boat Regatta, has been approved and scheduled on an annual basis in the regulated area. This proposal would add the Chincoteague Power Boat Regatta to the list of events for which the regulations will be in effect, thereby eliminating the need for issuance of temporary rules for this event. This proposal is necessary to control vessel traffic during the event to enhance the safety of participants, spectators, and transiting vessels.

### Discussion of Proposed Rule

The Coast Guard proposes to amend the special local regulations previously established for this event area by incorporating a table which identifies specific events during which the regulated area will be in effect and amending the language of the regulation to include reference to this table. Since this action will not significantly increase the period of time that the channel is restricted and the Coast Guard patrol commander may stop any event to assist transit of vessels through the regulated area, normal marine traffic should not be severely disrupted.

### Regulatory Evaluation

This proposal is not a significant regulatory action under section 3(f) of Executive Order 12866 and does not require an assessment of potential costs and benefits under section 6(a)(3) of that order. It has been exempted from review by the Office of Management and Budget under that order. It is not significant under the regulatory policies and procedures of the Department of Transportation (DOT) (44 FR 11040; February 26, 1979). The Coast Guard expects the economic impact of this proposal to be so minimal that a full Regulatory Evaluation under paragraph 10e of the regulatory policies and procedures of DOT is unnecessary. The impact on routine vessel navigation is expected to be minimal.

### Small Entities

Under the Regulatory Flexibility Act (5 U.S.C. 601 *et seq.*), the Coast Guard must consider whether this proposal will have a significant economic impact on a substantial number of small entities. ''Small Entities'' include independently owned and operated small businesses that are not dominant in their field and that otherwise qualify as ''small business concerns'' under section 3 of the Small Business Act (15 U.S.C. 632). The Coast Guard expects the economic impact of this proposal to be minimal, and certifies under 5 U.S.C. 605(b), that this proposal, if adopted, will not have a significant economic impact on a substantial number of small entities.

### Collection of Information

This proposal contains no Collection of Information requirements under the Paperwork Reduction Act (44 U.S.C. 3501 *et seq.*).

### Federalism

The Coast Guard has analyzed this proposal under the principles and criteria contained in Executive Order 12612 and has determined that this proposal does not have sufficient federalism implications to warrant the preparation of a Federalism Assessment.

### Environment

The Coast Guard considered the environmental impact of this proposal and concluded that, under section 2.b.2.e(34)(h) of Commandant Instruction M16475.1b (as amended, 61 FR 13564; 27 March 1996), this proposal is categorically excluded from further environmental documentation.

**List of Subjects in 33 CFR Part 100**

Marine Safety, Navigation (water), Reporting and recordkeeping requirements, Waterways.

For the reasons set out in the preamble, the Coast Guard proposes to amend 33 CFR part 100 as follows:

## PART 100—[AMENDED]

1. The authority citation for part 100 continues to read as follows:

**Authority:** 33 U.S.C. 1233; 49 CFR 1.46

2. Section 100.519 is amended by revising paragraphs (b)(1) and (c) and adding table 1 to read as follows:

**§ 100.519 Assateague Channel, Chincoteague, Virginia.**

* * * * *

(b) *Special local regulations.*—(1) Except for participants registered with the event sponsor and vessels authorized by the Coast Guard Patrol Commander, no person or vessel may enter or remain in the regulated area without the permission of the Patrol Commander.

* * * * *

(c) *Effective periods.* This regulation is effective annually for the *duration* of each marine event listed in table 1, or as otherwise specified in the Coast Guard Local Notice to Mariners and a **Federal Register** notice. The Coast Patrol Commander will announce by Broadcast Notice to Mariners the specific time periods during which the regulations will be enforced.

TABLE 1 OF § 100.519

| |
|---|
| Chincoteague Power Boat Regatta: |
| Sponsor: Chincoteague Chamber of Commerce |
| Date: Third Saturday and Sunday in June |
| Pony Penning Swim: |
| Sponsor: Chincoteague Volunteer Fire Department |
| Date: Last Wednesday in July and the following Friday |

Dated: March 28, 1997.

**Kent H. Williams,**

*Vice Admiral, U.S. Coast Guard Commander, Fifth Coast Guard District.*

[FR Doc. 97–10152 Filed 4–18–97; 8:45 am]

BILLING CODE 4910–14–M

## DEPARTMENT OF TRANSPORTATION

## Coast Guard

## 33 CFR Part 100

**[CGD01–97–009]**

## Special Local Regulation: Fireworks Displays Within the First Coast Guard District

**AGENCY:** Coast Guard, DOT.

**ACTION:** Notice of proposed rulemaking.

**SUMMARY:** The Coast Guard proposes to revise the special local regulation for annual fireworks displays in the First Coast Guard District. The revision will include additional fireworks displays, and arrange the events listed in Table 1 by order of event date. This regulation is necessary to control vessel traffic within the immediate vicinity of the fireworks launch sites and to ensure the safety of life and property during each event.

**DATES:** Comments must be received on or before May 21, 1997.

**ADDRESSES:** Comments should be mailed to Commander (osr), First Coast Guard District, Captain John Foster Williams Federal Building, 408 Atlantic Ave., Boston, MA 02110–3350, or may be hand delivered to Room 734 at the same address, between 8 a.m. and 4 p.m., Monday through Friday, except federal holidays. Comments will become part of this docket and will be available for inspection or copying at the above address.

**FOR FURTHER INFORMATION CONTACT:** Lieutenant Commander J.B. Donovan, Office of Search and Rescue, First Coast Guard District, (617) 223–8278.

**SUPPLEMENTARY INFORMATION:**

### Request for Comments

The Coast Guard encourages interested persons to participate in this rulemaking by submitting written data, views, or arguments. Each person submitting comments should include their name and address, identify this notice (CGD01–97–009), the specific section of the proposal to which each comment applies, and give the reason for each comment. Persons requesting acknowledgment of receipt of comments should enclose a stamped, self-addressed postcard or envelope. All comments received during the comment period will be considered by the Coast Guard and may change this proposal.

The Coast Guard has no plans to hold a public hearing. Persons may request a public hearing by writing to Commander (osr), First Coast Guard District at the address under **ADDRESSES.** The request should include reasons why a hearing would be beneficial. If the Coast Guard determines that oral presentations will aid this rulemaking, it will hold a public hearing at a time and place announced by a later notice in the **Federal Register**. Good cause exists for providing a comment period of less than 60 days. Due to the date final information was available concerning these events, the Coast Guard was unable to publish this NPRM in time to provide a longer comment period. Due to the need to revise Table 1 in order to regulate events occurring in May, additional notice would be impracticable, unnecessary, and contrary to the public interest.

### Discussion of Proposed Amendments

Each year, organizations in the First District sponsor fireworks displays in the same location during the same general time period. 33 CFR 100.114 provides special local regulations to ensure the safety of these events. Table 1 of 33 CFR 100.114 provides approximate dates and locations for these annual fireworks events. Each event uses a barge or on-shore site as the fireworks launch platform. The special local regulations control vessel movement within a 500 yard radius around the launch platforms to ensure the safety of persons and property. Coast Guard personnel on-scene may allow persons within the 500 yard radius should conditions permit. The Coast Guard publishes notices in the **Federal Register** which provide the exact dates and times for these events.

The Coast Guard proposes to revise the special local regulation in Section 100.114 by adding and deleting several fireworks displays. The revised list of events is based on input received from organizations throughout the First District. The Coast Guard also proposes to revise Table 1 to list the events in chronological order to ease administration of the events by the Coast Guard and to provide better notice to the public.

The Coast Guard proposes to add the following fireworks displays to Table 1:

First Night Martha's Vineyard
*Sponsor:* Town of Martha's Vineyard Chamber of Commerce
*Date:* December 31
*Location:* Vineyard Haven Harbor, Martha's Vineyard, MA

City of New Bedford First Night
*Sponsor:* City of New Bedford
*Date:* December 31
*Location:* New Bedford Harbor, New Bedford, MA

Hull Memorial Day Festival
*Sponsor:* Town of Hull
*Date:* Memorial Day week or weekend

*Location:* Nantasket Beach, Hull, MA

Ellis Island Medals of Honor Ceremony Fireworks Display
*Sponsor:* National Ethnic Coalition of Organizations
*Date:* Third Sunday of May
*Location:* Upper Bay New York Harbor, New York, NY

Museum of Science Memorial Day Fireworks
*Sponsor:* Museum of Science
*Date:* Memorial Day week or weekend
*Location:* Charles River, Boston, MA

Barnum Festival Fireworks
*Sponsor:* The Barnum Foundation
*Date:* A date during the last week of June or first week of July
*Location:* Seaside Park-Bridgeport Harbor, Bridgeport, CT

Schooner Days Fireworks
*Sponsor:* Town of Rockland Chamber of Commerce
*Date:* A date within the first two weeks of July
*Location:* Rockland Harbor, Rockland, ME

Summer Music Fireworks
*Sponsor:* Summer Music, Inc.
*Date:* On or about July 3
*Location:* Niantic River, Harkness Park, Waterford, CT

Stewarts 4th of July Fireworks Display
*Sponsor:* W.P. Stewart
*Date:* On or about July 4
*Location:* Somes Sound, Northeast Harbor, ME

Colchester Bay, VT
*Sponsor:* Town of Colchester Parks and Recreation Dept.
*Date:* On or about July 4
*Location:* Malletts Bay, Lake Champlain, Colchester, VT

Beverly Farms Fourth of July Celebration
*Sponsor:* Farms-Pride 4th of July Committee, Inc.
*Date:* On or about July 4
*Location:* West Beach, Manchester Bay, Beverly Farms, MA

Gloucester Fireworks
*Sponsor:* Gloucester Chamber of Commerce
*Date:* On or about July 4
*Location:* Gloucester Harbor, Gloucester, MA

Plymouth Fireworks Display
*Sponsor:* July Four Plymouth, Inc.
*Date:* On or about July 4
*Location:* Plymouth Harbor, Plymouth, MA

Macy's July 4th Fireworks Display
*Sponsor:* Macy's East, Inc.
*Date:* Or or about July 4
*Location:* New York Harbor Upper Bay, Manhattan, NY

Dolan Family Fireworks
*Sponsor:* Mr. Charles F. Dolan
*Date:* On or about July 4
*Location:* Cover Point, Oyster Bay, NY

National Night Out Against Crime
*Sponsor:* 100th Precinct Community Council
*Date:* First Tuesday of August
*Location:* Rockaway Park, Rockaway Beach, NY

Summer Music Fireworks
*Sponsor:* Summer Music, Inc.
*Date:* On or about August 3
*Location:* Niantic River, Harkness Park, Waterford, CT

Summer Music Fireworks
*Sponsor:* Summer Music, Inc.
*Date:* On or about August 23
*Location:* Niantic River, Harkness Park, Waterford, CT

Camden Fireworks Display
*Sponsor:* Town of Camden Chamber of Commerce
*Date:* Labor Day weekend
*Location:* Camden Harbor, Camden, ME

Grand Fiesta Italiana
*Sponsor:* Sons of Italy, Port Washington, NY
*Date:* First Saturday following Labor Day
*Location:* Hemptstead Harbor, Hempstead, NY

Norwalk Oyster Festival Fireworks
*Sponsor:* Norwalk Seaport Association
*Date:* A date within the first two weekends of September
*Location:* Norwalk Harbor, Norwalk, CT

City of Yonkers Fireworks
*Sponsor:* City of Yonkers
*Date:* Third Saturday of September
*Location:* Hudson River, Yonkers, NY

Rensselaer Festival
*Sponsor:* City of Rensselaer
*Date:* A date during the second or third weekend in September
*Location:* Hudson River, Rensselaer, NY

Deepavali Festival
*Sponsor:* Association of Indians in America, Inc.
*Date:* A day during last week of September or first week of October
*Location:* East River, Manhattan, NY

The Coast Guard proposes to delete the following fireworks events displays from Table 1.

U.S. Open Fireworks
*Sponsor:* Barons Cove Inn, Sag Harbor, NY
*Date:* A date within the middle two weeks of June
*Location:* Barons Cove, Sag Harbor, NY

City of Yonkers Fireworks
*Sponsor:* City of Yonkers
*Date:* A date during the second or third weekend of September
*Location:* Hudson River

Change Fireworks
*Sponsor:* Change, Medford, NY
*Date:* Date within first two weekends of August
*Location:* Short Beach, Nissequogue, NY

Hartford Riverfront Regatta
*Sponsor:* Riverfront Recapture, Inc.
*Date:* First or second weekend in August
*Location:* Connecticut River, Hartford, CT

Koch Industries Fireworks
*Sponsor:* Koch Industries
*Date:* Last weekend in August or first weekend in September
*Location:* Shinnecock Bay, South Hampton, NY

Summer Music Fireworks
*Sponsor:* Summer Music, Inc.
*Date:* Weekend during month of August
*Location:* Niantic River, Harkness Park, Waterford, CT

## Regulatory Evaluation

This proposal is not a significant regulatory action under Executive Order 12866 and does not require an assessment of potential costs and benefits under section 6(a)(3) of that order. It has not been reviewed by the Office of Management and Budget under that order. It is not significant under the regulatory policies and procedures of the Department of Transportation (DOT) (44 FR 11040; February 26, 1979). Due to the short duration of each fireworks display, the advance notice provided to the marine community, and the small size of each regulated area, the Coast Guard expects the economic impact of this proposal to be so minimal that a full Regulatory Evaluation, under paragraph 10e of the regulatory policies and procedures of DOT, is unnecessary.

## Small Entities

The Coast Guard has considered the economic impact of this rule on small entities under the Regulatory Flexibility Act (5 U.S.C. 601 *et seq.*) For the reasons discussed in the Regulatory Evaluation, the Coast Guard has determined that this rule will have no significant economic impact on small entities. If however, you think that your business or organization qualifies as a small entity and that this rule will have a significant economic impact on your business or organization, please submit a comment (see **ADDRESSES**) explaining why you think it qualifies and in what way and to what degree this rule will economically affect it.

## Collection of Information

This proposal contains no collection of information requirements under the Paperwork Reduction Act (44 U.S.C. 3501 *et seq.*).

## Federalism

The Coast Guard has analyzed this proposal under the principles and criteria contained in Executive Order 12612 and has determined that this proposal does not have sufficient federalism implications to warrant the preparation of a Federalism Assessment.

## Environment

The Coast Guard has considered the environmental impacts of this proposal and concluded that, under paragraph 2.B.2.e.34(h) of COMDTINST 16475.1B, (as revised by 61 FR 13564, March 27, 1996) this proposal is a special local regulation issued in conjunction with annual regattas or marine parades and is categorically excluded from further environmental documentation.

## List of Subjects in 33 CFR Part 100

Marine safety, Navigation (water), Records and recordkeepign requirements, Waterways.

**Proposed Regulation**

For reasons set out in the preamble, the Coast Guard proposes to amend 33 CFR Part 100 as follows:

## PART 100—[AMENDED]

1. The authority citation for Part 100 continues to read as follows:

**Authority:** 33 USC 1233; 49 CFR 1.46 and 33 CFR 100.35.

2. Table 1 of section 100.114 is revised to read as follows:

### § 100.114 First Coast Guard District Fireworks

* * * * *

*Table 1—Fireworks Displays*

DECEMBER

1. First Night Fireworks
*Sponsor:* First Night Inc.
*Date:* December 31
*Location:* Boston Inner Harbor, Boston, MA

2. First Night Martha's Vineyard
*Sponsor:* Town of Martha's Vineyard Chamber of Commerce
*Date:* December 31
*Location:* Vineyard Haven Harbor, Martha's Vineyard, MA

3. First Night Mystic
*Sponsor:* Mystic Community Center
*Date:* December 31
*Location:* Mystic River, Mystic, CT

4. City of New Bedford First Night
*Sponsor:* City of New Bedford Chamber of Commerce
*Date:* December 31
*Location:* New Bedford Harbor, New Bedford, MA

MAY

1. Hull Memorial Day Festival
*Sponsor:* Town of Hull
*Date:* Memorial Day week or weekend
*Location:* Nantasket Beach, Hull, MA

2. Ellis Island Medals of Honor Ceremony Fireworks Display
*Sponsor:* National Ethnic Coalition of Organizations
*Date:* Third Sunday of May
*Location:* Upper Bay New York Harbor, New York, NY

3. Museum of Science Memorial Day Fireworks
*Sponsor:* Museum of Science
*Date:* Memorial Day week or weekend
*Location:* Charles River, Boston, MA

4. Yampol Family Fireworks
*Sponsor:* Azurite Corp. LTD., Fort Lauderdale, FL
*Date:* Last weekend of May
*Location:* Barons Cove, Sag Harbor, NY

JUNE

1. Brick Founders Day Fireworks
*Sponsor:* Brick Township Chamber of Commerce
*Date:* First weekend in June
*Location:* Metedeconk River, Windward Beach, Brick Township, NJ

2. Barnum Festival Fireworks
*Sponsor:* The Barnum Foundation
*Date:* A date during the last week of June or first week of July
*Location:* Seaside Park-Bridgeport Harbor, Bridgeport, CT

JULY

1. Boston Harborfest Fireworks
*Sponsor:* Harborfest Committee
*Date:* A date during late June/early July
*Location:* Boston Inner Harbor, Boston, MA

2. American Legion Post 83 Fireworks
*Sponsor:* Town of Branford American Legion Post 83
*Date:* A date within the first week of July
*Location:* Branford Point, Branford, CT

3. Devon Yacht Club Fireworks
*Sponsor:* Devon Yacht Club, Amagansett, NY
*Date:* A date within the first week of July
*Location:* Devon Yacht Club, Amagansett, NY

4. Hempstead Fireworks
*Sponsor:* Town of Hempstead, NY
*Date:* A date within the first week of July
*Location:* Point Lookout, Hempstead, NY

5. Schooner Days Fireworks
*Sponsor:* Town of Rockland Chamber of Commerce
*Date:* A date within the first two weeks of July
*Location:* Rockland Harbor, Rockland, ME

6. Summer Music Fireworks
*Sponsor:* Summer Music, Inc.
*Date:* On or about July 3
*Location:* Niantic River, Harkness Park, Waterford, CT

7. Bangor Fireworks
*Sponsor:* Bangor 4th of July Corporation
*Date:* On or about July 4
*Location:* Bangor/Brewer waterfront, ME

8. Bar Harbor Fireworks
*Sponsor:* Bar Harbor Chamber of Commerce
*Date:* On or about July 4
*Location:* Bar Harbor/Bar Island, ME

9. Stewarts 4th of July Fireworks Display
*Sponsor:* W. P. Stewart
*Date:* On or about July 4
*Location:* Somes Sound, Northeast Harbor, ME

10. Walsh's Fireworks
*Sponsor:* Mr. Patrick Walsh
*Date:* On or about July 4
*Location:* Union River Bay, ME

11. Colchester Bay, VT
*Sponsor:* Town of Colchester Parks and Recreation Dept.
*Date:* On or about July 4
*Location:* Malletts Bay, Lake Champlain, Colchester, VT

12. Town of Barnstable Fireworks
*Sponsor:* Town of Barnstable
*Date:* On or about July 4
*Location:* Dunbar Point/Kalmus Beach, Barnstable, MA

13. Fourth of July Celebration
*Sponsor:* Farms-Pride 4th of July Committee, Inc.
*Date:* On or about July 4
*Location:* West Beach, Manchester Bay, Beverly Farms, MA

14. Edgartown Fireworks
*Sponsor:* Edgartown Firefighters Association
*Date:* On or about July 4
*Location:* Edgartown Harbor, Edgartown, MA

15. Falmouth Fireworks
*Sponsor:* Falmouth Fireworks Committee
*Date:* On or about July 4
*Location:* Falmouth Harbor, .25 nm east of buoy #16, Falmouth, MA

16. Gloucester Fireworks
*Sponsor:* Gloucester Chamber of Commerce
*Date:* On or about July 4
*Location:* Gloucester Harbor, Gloucester, MA

17. Marion Fireworks
*Sponsor:* Town of Marion Fireworks Committee
*Date:* On or about July 4
*Location:* Silver Shell Beach, Marion, MA

18. City of New Bedford Fireworks
*Sponsor:* City of New Bedford
*Date:* On or about July 4
*Location:* New Bedford Harbor, New Bedford, MA

19. Onset Fireworks
*Sponsor:* Prudential Commerce Onset Fire District
*Date:* On or about July 4
*Location:* Onset Harbor, Onset, MA

20. Plymouth Fireworks Display
*Sponsor:* July Four Plymouth Inc.
*Date:* On or about July 4
*Location:* Plymouth Harbor, Plymouth, MA

21. Wellfleet Fireworks
*Sponsor:* Wellfleet Fireworks Committee
*Date:* On or about July 4
*Location:* Indian Neck Jetty, Wellfleet, MA

22. Weymouth 4th of July Fireworks
*Sponsor:* Town of Weymouth Harbormaster
*Date:* On or about July 4
*Location:* Weymouth Fore River, Weymouth, MA

23. Yarmouth-Dennis Fireworks
*Sponsor:* Yarmouth-Dennis Chamber of Commerce
*Date:* On or about July 4
*Location:* Nantucket Sound, east of channel entrance to Bass River, Yarmouth, MA

24. Bristol 4th of July Fireworks
*Sponsor:* Bristol Fourth of July Committee
*Date:* On or about July 4
*Location:* Bristol Harbor, Bristol, RI

25. Oyster Harbor Club Fourth of July Festival
*Sponsor:* Oyster Harbor Club, Inc.
*Date:* On or about July 4
*Location:* Tim's Cove, North Bay, Osterville, RI

26. Shooters Independence Day
*Sponsor:* Shooters Waterfront Cafe USA
*Date:* On or about July 4
*Location:* Providence River off India Point Park, Providence, RI

27. Tiverton Waterfront Festival
*Sponsor:* Tiverton Waterfront Festival Committee
*Date:* On or about July 4
*Location:* Grinnel's Beach, Sakonnet River, Tiverton, RI

28. Fairfield Aerial Fireworks
*Sponsor:* Fairfield Park Commission
*Date:* On or about July 4
*Location:* Jennings Beach, Long Island Sound, Fairfield, CT

29. Subfest Fireworks
*Sponsor:* U.S. Naval Submarine Base
*Date:* On or about July 4
*Location:* Thames River, Groton, CT

30. Middletown Fireworks

*Sponsor:* City of Middletown
*Date:* On or about July 4
*Location:* Connecticut River, Middletown, CT

31. Hartford Riverfest
*Sponsor:* July 4th Riverfest, Inc.
*Date:* On or about July 4
*Location:* Connecticut River, Hartford, CT

32. City of Norwalk Fireworks
*Sponsor:* Norwalk Recreation and Parks Department
*Date:* On or about July 4
*Location:* Calf Pasture Beach, Long Island Sound, Norwalk, CT

33. Norwich American Wharf Fireworks
*Sponsor:* American Wharf Marina
*Date:* On or about July 4
*Location:* Norwich Harbor, Norwich, CT

34. Old Lyme Fireworks
*Sponsor:* Mr. James R. Rice
*Date:* On or about July 4
*Location:* Sound View Beach, Long Island Sound, Old Lyme, CT

35. Stratford Fireworks
*Sponsor:* Town of Stratford
*Date:* On or about July 4
*Location:* Short Beach, Stratford, CT

36. Wesport P.A.L. Fireworks
*Sponsor:* Westport Police Athletic League
*Date:* On or about July 4
*Location:* Compo Beach, Westport, Ct

37. Bayville Crescent Club Fireworks
*Sponsor:* Bayville Crescent Club, Bayville, NY
*Date:* On or about July 4
*Location:* Cooper Bluff, Cove Neck, NY

38. Macy's July 4th Fireworks Display
*Sponsor:* Macy's East, Inc.
*Date:* On or about July 4
*Location:* New York Harbor Upper Bay, Manhattan, NY

39. Montauk Independence Day
*Sponsor:* Montauk Chamber of Commerce
*Date:* On or about July 4
*Location:* Montauk Town Beach, Montauk, NY

40. Dolan Family Fireworks
*Sponsor:* Mr. Charles F. Dolan
*Date:* On or about July 4
*Location:* Cove Point, Oyster Bay, NY

41. Jones Beach State Park Fireworks
*Sponsor:* Long Island State Park Administration Headquarters
*Date:* On or about July 4
*Location:* Fishing Pier, Jones Beach State Park, Wantagh, NY

42. Staten Island's 4th of July
*Sponsor:* Borough of Staten Island
*Date:* On or about July 4
*Location:* Raritan Bay, vicinity of federal anchorages 44 and 45, Ward Point Bend, NY/NJ

43. Fireworks on the Navesink
*Sponsor:* Red Bank Fireworks Committee
*Date:* On or about July 4
*Location:* Navesink River, 4 nm WSW Oceanic Bridge, Red Bank, NJ

44. Brick Summerfest Fireworks
*Sponsor:* Brick Township Chamber of Commerce
*Date:* On or about July 4
*Location:* Metedeconk River, Windward Beach, Brick Township, NJ

45. Thames River Fireworks
*Sponsor:* Town of Groton
*Date:* Weekend following July 4
*Location:* Thames River, off Electric Boat, Groton, CT

46. Stamford Fireworks
*Sponsor:* City of Stamford
*Date:* A date within first two weeks of July
*Location:* Westcott Cove, Stamford, CT

47. Town of Babylon Fireworks
*Sponsor:* Town of Babylon, NY
*Date:* A date within the first two weeks of July
*Location:* Nezeras Island, Babylon, NY

48. Boys Harbor Fireworks Extravaganza
*Sponsor:* Boys Harbor Inc.
*Date:* Second or third weekend in July
*Location:* Three Mile Harbor, East Hampton, NY

49. Belfast Fireworks
*Sponsor:* Belfast Bay Festival Committee
*Date:* Third Saturday in July
*Location:* Belfast Bay, ME

AUGUST

1. National Night Out Against Crime
*Sponsor:* 100th Precinct Community Council
*Date:* First Tuesday of August
*Location:* Rockaway Park, Rockaway Beach, NY

2. Summer Music Fireworks
*Sponsor:* Summer Music Inc.
*Date:* On or about August 3
*Location:* Niantic River, Harkness Park, Waterford, CT

3. Hartford Riverfront Regatta
*Sponsor:* Riverfront Recapture Inc.
*Date:* First or second weekend in August
*Location:* Connecticut River, Hartford, CT

4. Fall River Celebrates America Fireworks
*Sponsor:* Fall River Chamber of Commerce
*Date:* Second Saturday in August
*Location:* Taunton Ricer, vicinity of buoy #17, Fall River, MA

5. Summer Music Fireworks
*Sponsor:* Summer Music Inc.
*Date:* On or about August 23
*Location:* Niantic River, Harkness Park, Waterford, CT

6. Oaks Bluff Fireworks
*Sponsor:* Oaks Bluff Fireman's Civic Association
*Date:* A date during the last two weeks in August
*Location:* Oaks Bluff Beach, Oaks Bluff, MA

7. Camden Fireworks Display
*Sponsor:* Town of Camden Chamber of Commerce
*Date:* Labor day weekend
*Location:* Camden Harbor, Camden, ME

8. Gloucester Fireworks
*Sponsor:* Gloucester Chamber of Commerce
*Date:* Labor Day holiday weekend
*Location:* Gloucester Harbor, Gloucester, MA

9. Salute to Summer
*Sponsor:* Naval Education and Training Center
*Date:* Friday of weekend preceding Labor Day holiday weekend
*Location:* Narragansett Bay, East Passage, off Coasters Harbor Island, Newport, RI

10. Norwich Harbor Day Fireworks
*Sponsor:* Harbor Day Committee
*Date:* Last Sunday in August
*Location:* Norwich Harbor, off American Wharf Marina, Norwich, CT

SEPTEMBER

1. Grand Fiesta Italiana
*Sponsor:* Sons of Italy, Port Washington, NY
*Date:* First Saturday following Labor Day
*Location:* Hemptstead Harbor, Hempstead, NY

2. Taste of Italy
*Sponsor:* Italian Heritage Committee
*Date:* Weekend following Labor Day holiday weekend
*Location:* Norwich Harbor, off Norwich Marina, Norwich, CT

3. Norwalk Oyster Festival Fireworks
*Sponsor:* Norwalk Seaport Association
*Date:* A date within the first two weekends of September
*Location:* Norwalk Harbor, Norwalk, CT

4. Anniversary Fireworks
*Sponsor:* Town of Chilmark
*Date:* On or about 14 September
*Location:* Menemsha Beach, Chilmark, MA

5. City of Yonkers Fireworks
*Sponsor:* City of Yonkers
*Date:* Third Saturday of September
*Location:* Hudson River, Yonkers, NY

6. City of Yonkers Fireworks
*Sponsor:* City of Yonkers
*Date:* A date during the second or third weekend of September
*Location:* Hudson River

7. Cow Harbor Day Fireworks
*Sponsor:* Village of Northport Harbor
*Date:* A date within last two weekends of September
*Location:* Sand Pit, Northport Harbor, Northport, NY

8. Rensselaer Festival
*Sponsor:* City of Rensselaer
*Date:* A date during the second or third weekend in September
*Location:* Hudson River, Rensselaer, NY

9. Deepavali Festival
*Sponsor:* Association of Indians in America, Inc.
*Date:* A day during last week of September or first week of October
*Location:* East River, Manhattan, NY

* * * * *

Dated: April 10, 1997.

**J.L. Linnon,**

*Rear Admiral, U.S. Coast Guard Commander, First Coast Guard District.*

[FR Doc. 97–10232 Filed 4–18–97; 8:45 am]

BILLING CODE 4910–14–M

---

## DEPARTMENT OF TRANSPORTATION

## Coast Guard

## 33 CFR Part 117

**[CGD05–97–002]**

**RIN 2115–AE47**

## Drawbridge Operation Regulations; Ship Channel, Great Egg Harbor Bay, New Jersey

**AGENCY:** Coast Guard, DOT.

**ACTION:** Notice of proposed rulemaking.

**SUMMARY:** At the request of the New Jersey Department of Transportation (NJDOT), the Coast Guard is proposing to change the regulations governing operation of the Route 52 (Ship Channel) Bridge across Great Egg Harbor Bay, mile 0.5, between Somers Point and Ocean City, New Jersey.

This proposal would require the Route 52 (Ship Channel) Bridge to open on signal except that, between Memorial Day and Labor Day from 8 a.m. to 8 p.m., the draw need only open on the hour and half hour. This proposed change is intended to synchronize requests for bridge openings with the nearby Route 52 (Beach Thorofare) Bridge and further reduce the number of openings during the summer tourist season in order to curtail delays to vehicular traffic while still providing for the reasonable needs of navigation.

**DATES:** Comments must be received on or before June 20, 1997.

**ADDRESSES:** Comments may be mailed to Commander (Aowb), USCG Atlantic Area, Federal Building, 4th floor, 431 Crawford Street, Portsmouth, Virginia 23704–5004, or may be hand-delivered to the same address between 8 a.m. and 4:30 p.m., Monday through Friday, except Federal holidays. The telephone number is (757) 398–6222. Comments will become part of this docket and will be available for inspection and copying at the above address.

**FOR FURTHER INFORMATION CONTACT:** Ann Deaton, Bridge Administrator, USCG Atlantic Area, (757) 398–6222.

**SUPPLEMENTARY INFORMATION:**

## Request for Comments

The Coast Guard encourages interested persons to participate in this rulemaking by submitting written views, comments, data, or arguments. Persons submitting comments should include their names and addresses, identify this rulemaking (CGD05–97–002), the specific section of this rule to which each comment supplies, and give reasons for each comment. The Coast Guard requests that all comments and attachments be submitted in an unbound format suitable for copying and electronic filing. If that is not practical, a second copy of any bound material is requested. Persons wanting acknowledgment of receipt of comments should enclose a stamped, self-addressed postcard or envelope.

The Coast Guard will consider all comments received during the comment period. It may change this proposal in view of the comments.

The Coast Guard plans no public hearing. Persons may request a public hearing by writing to the address listed under **ADDRESSES**. The request should include reasons why a hearing would be beneficial. If it determines that the opportunity for oral presentations will aid this rulemaking, the Coast Guard will hold a public hearing at a time and place announced by a later notice in the **Federal Register**.

## Drafting Information

The principal persons involved in drafting this document are Mr. Waverly W. Gregory, Jr., Project Manager, Bridge Administration Section, and CDR G. Shelton, Project Counsel, Maintenance and Logistics Command Atlantic Legal Division.

## Background and Purpose

The current regulations found at 33 CFR 117.753 require the Route 52 (Ship Channel) bridge to open on signal except that from 11 p.m. to 7 a.m., year round a 24 hours advance notice is required; and from Memorial Day through Labor Day from 10 a.m. to 8 p.m. on Saturdays, Sundays, and Federal holidays, the bridge opens only on the hour and half hour for recreational vessels.

The New Jersey Department of Transportation (NJDOT) has requested that 33 CFR 117.753 be amended to extend the periods during the summer months in which the bridge must open only on the hour and half hour. In support of its request NJDOT contends that its records show that requests for openings from Memorial Day through Labor Day are minimal in number, such that the requested amendment would not significantly affect vessel traffic.

The Coast Guard has reviewed NJDOT's bridge logs for 1993 through 1995, copies of which are available for inspection and copying at the address under **ADDRESSES**. According to the logs, for the years 1993 through 1995, from May through September between 8 a.m. and 8 p.m. Monday through Friday, the Route 52 (Ship Channel) bridge opened 250, 248, and 287 times, respectively for recreational and commercial vessels, an average of 12 openings per week. The Coast Guard believes that the proposed change will balance the needs of vehicular and vessel traffic without unduly restricting vessel navigation.

NJDOT has also recently requested a change to the operating regulations for the Route 52 (Beach Thorofare) Bridge. Due to the close proximity of the Route 52 bridges over Beach Thorofare and Ship Channel, which are located approximately two miles apart, synchronized openings would augment the effectiveness of the recommended change to the regulations for the Route 52 (Ship Channel) Bridge.

## Discussion of Proposed Amendments

The Coast Guard proposes to amend Section 117.753 by revising paragraph (b) to require the Route 52 (Ship Channel) Bridge, miles 0.5 Great Egg Harbor Bay, to open on signal except that openings would be limited to on the hour and half hour from Memorial Day to Labor Day from 8 a.m. to 8 p.m.

The Coast Guard proposes to further amend 117.753 by deleting paragraphs (a)(1) and (b)(1) to delete the requirement to open for public vessels of the United States, state and local vessels used for public safety, a vessel in distress, or a vessel with a tow. The regulatory requirements for opening in emergency situations are provided in 33 CFR 117.31. Text modifications to be consistent with other proposed changes will be made in these paragraphs, as appropriate.

## Regulatory Evaluation

This propose rule is not a significant regulatory action under section 3(f) of Executive Order 12866 and does not require an assessment of potential costs and benefits under section 6(a)(3) of that order. It has been exempted from review by the Office of Management and Budget under that order. It is not significant under the regulatory policies and procedures of the Department of Transportation (DOT) (44 FR 11040; February 26, 1979). The Coast Guard expects the economic impact of this proposal to be so minimal that a full Regulatory Evaluation, under paragraph 10e of the regulatory policies and procedures of DOT is unnecessary.

## Small Entities

Under the Regulatory Flexibility Act (5 U.S.C. 601 *et seq.*), the Coast Guard must consider whether this proposal, if adopted, will have a significant economic impact on a substantial number of small entities. ''Small entities'' include independently owned and operated small businesses that are not dominant in their field and that otherwise qualify as ''small business concerns'' under section 3 of the Small Business Act (15 U.S.C. 632). Because it expects the impact of this proposal to be minimal, the Coast Guard certifies under 5 U.S.C. 605(b) that this proposal, if adopted, will not have a significant economic impact on a substantial number of small entities.

## Collection of Information

This proposal contains no collection of information requirements under the

Paperwork Reduction Act (44 U.S.C. 3501 *et seq*).

### Federalism

The Coast Guard has analyzed this proposal under the principles and criteria contained in Executive Order 12612 and has determined that this proposal will not have sufficient federalism implications to warrant preparation of a Federalism Assessment.

### Environment

The Coast Guard considered the environmental impact of this proposal and concluded that under section 2.B.2.e. (32)(e) of Commandant Instruction M16475.1B (as amended, 59 FR 38654, 29 July 1994), this proposal is categorically excluded from further environmental documentation. A Categorical Exclusion Determination statement has been prepared and placed in the rulemaking docket.

### List of Subjects in 33 CFR Part 117

Bridges.

### Regulations

In consideration of the foregoing, the Coast Guard proposes to amend part 117 of Title 33, Code of Federal Regulations, as follows:

## PART 117—DRAWBRIDGE REGULATIONS

1. The authority citation for part 117 continues to read as follows:

**Authority:** 33 U.S.C. 499; 49 CFR 1.46; 33 CFR 1.05–1(g); Section 117.255 also issued under the authority of Pub. L. 102–587, 106 Stat. 5039.

2. Section 117.753 is revised to read as follows:

**§ 117.753 Ship Channel, Great Egg Harbor Bay.**

The draw of the S52 (Ship Channel) bridge, mile 0.5 between Somers Point and Ocean City, shall open:

(a) From 11 p.m. to 7 a.m., on signal, if at least 24 hours advance notice is given.

(b) From Memorial Day through Labor Day from 8 a.m. to 8 p.m., on the hour and half hour.

(c) At all other times, on signal, for any vessel.

Dated: March 25, 1997.

**Kent H. Williams,**

*Vice Admiral, U.S. Coast Guard, Commander, Fifth Coast Guard District.*

[FR Doc. 97–10151 Filed 4–18–97; 8:45 am]

BILLING CODE 4910–14–M

## DEPARTMENT OF TRANSPORTATION

## Coast Guard

## 33 CFR Part 117

**[CGD05–97–013]**

**RIN 2115–AE47**

## Drawbridge Operation Regulations; Isle of Wight Bay, Ocean City, MD

**AGENCY:** Coast Guard, DOT.

**ACTION:** Notice of proposed rulemaking.

**SUMMARY:** At the request of the Maryland Department of Transportation (MDOT), the Coast Guard is proposing to change the regulations that govern the operation of the Route 50 drawbridge across Isle of Wight Bay, mile 0.5, located in Ocean City, Maryland, by requiring restricted drawbridge openings for all vessels each Saturday between May 25 and September 15, between the hours of 1 p.m. and 5 p.m. During these times, the bridge need open only on the hour, and must remain in the open position until all waiting vessels pass. All other provisions of the existing regulation for the Route 50 bridge remain the same. This proposed rule is intended to reduce motor vehicle traffic delays and congestion related to summer traffic entering and exiting the town of Ocean City while still providing for the reasonable needs of navigation.

**DATES:** Comments must be received on or before June 20, 1997.

**ADDRESSES:** Comments should be mailed to Commander (Aowb), USCG Atlantic Area, Federal Building, 4th Floor, 431 Crawford Street, Portsmouth, Virginia 23704–5004, or may be hand delivered to the same address between 8 a.m. and 4:30 p.m., Monday through Friday, except Federal holidays. The telephone number is (757) 398–6222. Comments will become a part of this docket and will be available for inspection and copying at the above address.

**FOR FURTHER INFORMATION CONTACT:** Ann B. Deaton, Bridge Administrator, USCG Atlantic Area, at (757) 398–6222.

**SUPPLEMENTARY INFORMATION:**

### Request for Comments

The Coast Guard encourages interested persons to participate in this rulemaking by submitting written data, views, or arguments. Persons submitting comments should include their names and addresses, identify this rulemaking (CGD05–97–013) and the specific section of this proposal to which each comment applies, and give the reason for each comment. The Coast Guard requests that all comments and attachments be submitted in an unbound format suitable for copying and electronic filing. If not practical, a second copy of any bound material is requested. Persons wanting acknowledgement of receipt of comments should enclose a stamped self-addressed postcard or envelope.

The Coast Guard will consider all comments received during the comment period. It may change this proposal based on the comments. The Coast Guard plans no public hearing. Persons may request a public hearing by writing to the address under **ADDRESSES**. The request should include reasons why a hearing would be beneficial. If it determines that the opportunity for oral presentation will aid this rulemaking, the Coast Guard will hold a public hearing at a time and place announced by a later notice in the **Federal Register**.

### Drafting Information

The principal persons involving in drafting this document are Bill H. Brazier, Project Manager, Bridge Administration Section, and LT Robert L. Wegman, Project Counsel, Maintenance and Logistics Command Atlantic Legal Division.

### Background and Purpose

The Route 50 drawbridge, across Isle of Wight Bay, mile 0.5, at Ocean City, Maryland, is currently required to open on signal, except that, from October 1 through April 30 from 6 p.m. to 6 a.m., the draw need open only if at least three hours notice is given and, from May 25 through September 15 from 9:25 a.m. to 9:55 p.m. the draw shall open at 25 minutes and 55 minutes after the hour for a maximum of 5 minutes to permit accumulated vessels to pass. MDOT's request to change the current regulation is based on a large number of vacationers traveling to and from Ocean City on Saturday afternoons during the tourist season (summer months). Vacationers entering and existing Ocean City Island every Saturday afternoon of the season create a vehicular traffic surge, an only two highway bridges (Route 50 and Route 90) are available for use.

The Route 90 bridge is a fixed-span structure, and the Route 50 bridge is a drawbridge. Over 350 charter boats historically pass through the Route 50 drawbridge on Saturdays from May 25 through September 15. This produces a dilemma to both waterway users and vehicular traffic trying to access the same drawbridge. MDOT proposes that, by providing only hourly openings on Saturday afternoons as opposed to the current half-hourly openings, vehicular traffic congestion on U.S. 50 will be

reduced and highway safety will be increased. MDOT requested that the operating schedule for the drawbridge be amended to reduce the number of openings on Saturday afternoons during the summer. This proposal would restrict drawbridge openings for all vessels every Saturday between May 25 through September 15 between the hours of 1 p.m. to 5 p.m. During these times, the bridge need open only on the hour, and must remain in the open position until all waiting vessels pass.

The Coast Guard tested this proposed change from July 13 through August 31, 1996 through a temporary deviation from the regulation, which permitted hourly openings on Saturdays. The test was intended to determine whether the Coast Guard should propose a permanent change to the regulation that would balance the needs of both waterway users and vehicular traffic. No adverse comments were received during the testing period. Information received from the Maryland Department of Transportation, the Ocean City Police Department and the bridgetenders on the US 50 drawbridge indicates that the test substantially improved highway traffic conditions while not causing undue hardships for waterway users. Based on the test results, the Coast Guard believes that this proposed rule will reduce motor vehicle traffic delays and congestion related to summer traffic entering and exiting the town of Ocean City, while still providing for the reasonable needs of navigation.

**Regulatory Evaluation**

This proposed rule is not a significant regulatory action under section 3(f) of Executive Order 12866 and does not require an assessment of potential costs and benefits under section 6(a)3 of that order. It has been exempted from review by the Office of Management and Budget under that order. It is not significant under the regulatory policies and procedures of the Department of Transportation (DOT) (44 FR 11040, February 26, 1979). The Coast Guard expects the economic impact of this proposed rule to be so minimal that a full Regulatory Evaluation under paragraph 10e of the regulatory policies and procedures of DOT is unnecessary.

**Small Entities**

Under the Regulatory Flexibility Act (5 U.S.C. 601 et seq.), the U.S. Coast Guard must consider whether this proposed rule will have a significant economic impact on a substantial number of small entities. ''Small entities'' include independently owned and operated small businesses that are not dominant in their field and that otherwise qualify as ''small business concerns'' under section 3 of the Small Business Act (15 U.S.C. 632). Because it expects the impact of this proposed rule to be minimal, the Coast Guard certifies under 5 U.S.C. 605(b) that this proposal, if adopted, will not have a significant economic impact on a substantial number of small entities.

**Collection of Information**

This proposal contains no collection of information requirements under the Paperwork Reduction Act (44 U.S.C. 3501 *et seq.*).

**Federalism**

The Coast Guard has analyzed this proposal under the principles and criteria contained in Executive Order 12612, and has determined that this proposed rule does not have sufficient federalism implications to warrant the preparation of a Federalism Assessment.

**Environment**

The Coast Guard considered the environmental impact of this proposal and concluded that under section 2.B.2.e (32)(e) of Commandant Instruction M16475.1B (as amended, 59 FR 38654, 29 July 1994), this proposed rule is categorically excluded from further environmental documentation. A Categorical Exclusion Determination statement has been prepared and placed in the rulemaking docket.

**List of Subjects in 33 CFR Part 117**

Bridges.

**Regulations**

In consideration of the foregoing, the Coast Guard proposes to amend part 117 of Title 33, Code of Federal Regulations as follows:

## PART 117—DRAWBRIDGE OPERATION REGULATIONS

1. The authority citation for part 117 continues to read as follows:

**Authority:** 33 U.S.C. 499; 49 CFR 1.46; 33 CFR 1.05–1(g); section 117.255 also issued under the authority of Pub. L. 102–587, 106 Stat. 5039.

2. Section 117.559 is revised to read as follows:

**§ 117.559 Isle of Wight Bay.**

The draw of the US50 bridge, mile 0.5, at Ocean City shall open on signal; except that, from October 1 through April 30 from 6 p.m. to 6 a.m., the draw shall open if at least three hours notice is given and, from May 25 through September 15 from 9:25 a.m. to 9:55 p.m. the draw shall open at 25 minutes after and 55 minutes after the hour for a maximum of five minutes to permit accumulated vessels to pass, except that, on Saturdays from 1 p.m. to 5 p.m., the draw shall open on the hour for any waiting vessels and shall remain in the open position until all waiting vessels pass.

Dated: April 1, 1997.

**Kent H. Williams,**

*Vice Admiral, U.S. Coast Guard, Commander, Fifth Coast Guard District.*

[FR Doc. 97–10150 Filed 4–18–97; 8:45 am]

BILLING CODE 4910–14–M

## ENVIRONMENTAL PROTECTION AGENCY

## 40 CFR Part 52

**[ND8–1–7233b & ND–001–0001b; FRL–5812–4]**

## Clean Air Act Approval and Promulgation of State Implementation Plan for North Dakota; Revisions to the Air Pollution Control Rules

**AGENCY:** Environmental Protection Agency (EPA).

**ACTION:** Proposed rule.

**SUMMARY:** EPA proposes to approve certain State implementation plan (SIP) revisions submitted by the State of North Dakota with letters dated August 15, 1995 and January 9, 1996. The revisions address air pollution control rules regarding general provisions; open burning; emissions of particulate matter, certain settleable acids and alkaline substances, and fugitives; air pollution emergency episodes; new source performance standards (NSPS); national emission standards for hazardous air pollutants (NESHAPs); and the minor source construction and operating permit programs. The State's January 9, 1996 submittal also revised SIP Chapter 6, Air Quality Surveillance, to identify current activities regarding visibility monitoring. In addition, these submittals included revisions involving the Title V Operating Permits Program, the Acid Rain Program, the restriction of sulfur compound emissions, and emission standards for hazardous air pollutants for source categories, which will be handled separately. Finally, EPA proposes to correct an incorporation by reference error that was made by EPA in an October 20, 1993 rulemaking regarding the State's regulation for sulfur compounds.

In the Final Rules Section of this **Federal Register**, EPA is acting on the State's SIP revisions as a direct final rule without prior proposal because the Agency views this as a noncontroversial revision amendment and anticipates no

adverse comments. A detailed rationale for EPA's actions is set forth in the direct final rule. If no adverse comments are received in response to this proposed rule, no further activity is contemplated and the direct final rule will become effective. If EPA receives adverse comments, the direct final rule will be withdrawn and all public comments received will be addressed in a subsequent final rule based on this proposed rule. EPA will not institute a second comment period on this action. Any parties interested in commenting on this document should do so at this time.

**DATES:** Comments on this proposed rule must be received in writing by May 21, 1997.

**ADDRESSES:** Written comments on this action should be addressed to Richard Long, Air Program Chief, 8P2–A, at the EPA Regional Office listed below. Copies of the State's submittal and documents relevant to this proposed rule are available for inspection during normal business hours at the following locations: Air Program, Environmental Protection Agency, Region VIII, 999 18th Street, suite 500, Denver, Colorado 80202–2405; and North Dakota State Department of Health and Consolidated Laboratories, Environmental Health Section, 1200 Missouri Avenue, Bismarck, North Dakota, 58502–5520.

**FOR FURTHER INFORMATION CONTACT:** Amy Platt, Environmental Protection Agency, (303) 312–6449.

**SUPPLEMENTARY INFORMATION:** See the information provided in the Direct Final action which is located in the Rules Section of this **Federal Register**.

Dated: April 7, 1997.

**Jack W. McGraw,**

*Acting Regional Administrator.*

[FR Doc. 97–10127 Filed 4–18–97; 8:45 am]

BILLING CODE 6560–50–P

## DEPARTMENT OF THE INTERIOR

## Bureau of Land Management

## 43 CFR Parts 2800, 2920, 4100, 4300, 4700, 5460, 5510, 8200, 8340, 8350, 8360, 8370, 8560, 9210, and 9260

**RIN 1004–AC30**

**[WO–130–1820–00 24 1A]**

## Law Enforcement; Criminal

**AGENCY:** Bureau of Land Management, Interior.

**ACTION:** Proposed rule; withdrawal.

**SUMMARY:** The Bureau of Land Management (BLM) is withdrawing the proposed rule to revise and consolidate the BLM's criminal law enforcement regulations. The proposal was published in the **Federal Register** on November 7, 1996. BLM is taking this action in response to the many comments we received on the proposal. This Action in no way diminishes the authority of BLM's Law Enforcement Officers or other employees under the current laws and regulations BLM will continue to enforce the law on public lands we administer.

**FOR FURTHER INFORMATION CONTACT:** Erica Petacchi, Regulatory Management Group (WO–630), Bureau of Land Management, Mail Stop 401LS, 1849 ''C'' Street, N.W., Washington, DC 20240; telephone (202) 452–5084 (Commercial or FTS).

**SUPPLEMENTARY INFORMATION:** On November 7, 1996, BLM published a proposed rule to consolidate and revise the Criminal Law Enforcement regulations. See 61 FR 57605–57621. BLM intended only to simplify and streamline the existing regulations and to consolidate scattered provisions in one new subpart. The initial comment period, which was to close on January 6, 1997, was extended twice for an additional 60 days at the requests of commenters. The comment period closed on March 7, 1997. After the close of the comment period, BLM decided to withdraw the proposed rule in response to misunderstanding and confusion by the public on how the proposed regulations would affect BLM's law enforcement program.

Dated: April 14, 1997.

**Bob Armstrong,**

*Assistant Secretary of the Interior.*

[FR Doc. 97–10211 Filed 4–18–97; 8:45 am]

BILLING CODE 4310–84–M

## FEDERAL COMMUNICATIONS COMMISSION

## 47 CFR Parts 0 and 1

**[GC Docket No. 97–113; FCC 97–113]**

## Electronic Filing of Documents in Rulemaking Proceedings

**AGENCY:** Federal Communications Commission.

**ACTION:** Proposed rule.

**SUMMARY:** In order to implement the changes mandated by the Telecommunications Act of 1996 to serve the public more quickly and efficiently, the Commission is proposing to expand the use of electronic filing in FCC proceedings. There has been positive public response to the Commission's use thus far of new information technologies. In this proceeding, the Commission proposes to amend its rules to permit the filing of comments in rulemaking proceedings (except broadcast allotment proceedings) over the Internet. This proceeding will make it easier for the public to participate in FCC rulemaking proceedings and is an important step not only in the Commission's ongoing efforts to prepare the FCC for the information age.

**DATES:** Comments are due May 21, 1997 and reply comments are due June 5, 1997.

**ADDRESSES:** Federal Communications Commission, 1919 M Street, N.W., Washington, D.C. 20554.

**FOR FURTHER INFORMATION CONTACT:** Laurence H. Schecker, Office of General Counsel, (202) 418–1720.

**SUPPLEMENTARY INFORMATION:**

Adopted: April 4, 1997.
Released: April 7, 1997.

### I. Introduction

1. In this Notice of Proposed Rulemaking (NPRM), we propose to allow parties to file comments [1] electronically in all FCC informal notice and comment rulemaking proceedings conducted under section 553 of the Administrative Procedure Act, except for broadcast allotment proceedings. [2] These electronic filings would be given the same treatment and consideration as comments filed on paper. We tentatively conclude that this action will make it significantly easier for members of the public to communicate their views to the Commission, and to review comments that others have filed. We believe that electronic filing will also allow the Commission to improve the efficiency of its own processes, to the benefit of the public.

### II. Background

2. The FCC is committed to taking advantage of new information technologies to better serve the public. For nearly two years, we have made virtually every FCC order, notice of proposed rulemaking, public notice, and news release available at no charge through the Internet. We have

[1] Throughout this NPRM, we use the term ''comments'' to refer to comments, reply comments, and other documents filed in notice and comment rulemaking proceedings prior to the reply comment deadline.

[2] 5 U.S.C. § 553. Broadcast allotment proceedings are large in number and are therefore not included in this pilot program. In addition, they are restricted under the Commission's ex parte rules, 47 CFR § 1.1208, which increases the chances that electronic filings might not be properly served on the parties.

continuously improved our World Wide Web site at <http://www.fcc.gov> to make it more content-rich and easier to navigate. In addition, we have established an electronic mailbox, <fccinfo@fcc.gov>, for submitting questions to the agency, and all the major operating Bureaus within the FCC now have their own World Wide Web home pages. Our Web site now receives roughly 110,000 individual ''hits'' daily, from more than 70,000 unique users every month.

3. In 1994, we appointed a Special Counsel for Reinventing Government to examine what steps the Commission had taken, and could take in the future, to better serve the public. The Special Counsel issued a detailed report entitled *Creating a Federal Communications Commission for the Information Age*, which, in turn, led to the largest reorganization in the history of the agency.[3] Since that time, we have taken many steps to use information technology to better serve the public. In major proceedings, we have invited commenters to file copies of their paper comments on diskette, and we have posted the comments received in this manner on our Internet site. We have created electronic mailboxes to accept informal comments in proceedings of particular interest to the Internet community, such as the Unlicensed National Information Infrastructure (U–NII) spectrum proposal[4] and the America's Carriers Telecommunication Association (ACTA) petition on Internet telephony.[5] In one recent proceeding, dealing with implications of Internet services for the public switched telephone network,[6] we received over 400,000 electronic mail (''e-mail'') messages in less than a month. We are making extensive use of electronic data submission and bidding in connection with our ongoing spectrum auctions, and we are rapidly moving forward with electronic filing mechanisms for, among other things, amateur radio forms, commercial wireless services, and tariffs filed by telecommunications carriers.

4. The enactment of the Telecommunications Act of 1996 (1996 Act) gave further impetus to our procedural reform effort. In order to implement the sweeping changes mandated by the 1996 Act, the Commission must serve the public more quickly and efficiently, and must maximize the opportunities for public input. On the same day that the 1996 Act was signed into law, the Commission issued a Notice of Inquiry (NOI) that invited the public, the communications industry, the bar, and state and local governments to make candid, comprehensive, and constructive suggestions to improve the full range of the Commission's routine processing procedures.[7] We sought comment on ways to eliminate redundancies, reduce waste and increase efficiency. We also sought comment on our current use of technology and how we can expand our use of technology to reduce regulatory burdens. We invited proposals for more effective methods of collecting and sharing information with regulated entities and the public, and we asked how we could better meet our customer service standards and goals.

5. We received numerous comments to our NOI. Virtually all of them advocated the expanded use of electronic filing in FCC proceedings.[8] The Commission recognizes that electronic filing can make it easier for industry and the public to communicate with the FCC, and allow us to provide better service to the public. To the extent that it allows small businesses to communicate their views more easily in FCC proceedings, it also reduces regulatory barriers to entry, consistent with Section 257[9] of the Communications Act, which directs the Commission to identify and eliminate market entry barriers for small businesses in the provision of telecommunications services.

6. Therefore, as the next step in our continuing effort to improve FCC processes, we have launched a comprehensive electronic filing initiative, one aspect of which is this rulemaking proceeding. We are also developing an on-line World Wide Web page interface that will make it possible for parties to submit documents to us electronically in all rulemaking proceedings. A more far-reaching aspect of the initiative will involve replacement of the Commission's aging, proprietary Record Image Processing System (RIPS), which currently provides access to comments filed with the Commission in notice and comment rulemaking proceedings as well as a variety of filings in other kinds of docketed proceedings (*e.g.*, tariff investigations, formal hearings before Administrative Law Judges, and applications by Bell Operating Companies to provide out-of-region long-distance service). By developing a new electronic processing system to complement, and eventually replace, RIPS, we hope to make it possible for the public to submit all documents now processed through RIPS to us directly through the Internet and other electronic means. This new system will allow parties and the public to search for and download comments and other filings in open FCC proceedings via the Internet, rather than coming to the FCC Reference Center or purchasing paper copies from the Commission's copy contractor.

7. At this time, however, the Commission's rules do not provide for the filing of formal comments in notice and comment rulemaking proceedings in electronic form. In order to establish explicit procedures for electronic comment filing for notice and comment rulemaking proceedings, and in order to address important implementation issues, we believe a rulemaking proceeding is appropriate.[10] We therefore initiate this proceeding as an important step not only in our electronic filing initiative, but in our ongoing efforts to prepare the FCC for the information age.

## III. Discussion

### *A. Formal Status of Electronically Filed Comments*

8. An estimated 40 million people in the United States now have access to the global Internet, and that number is growing rapidly.[11] Allowing parties to use the Internet and other forms of electronic transmission to file comments in FCC rulemaking proceedings would make it simpler for people to submit comments to the Commission, and

[3] *Report on Creating an FCC for the Information Age*, Special Counsel to the FCC for Reinventing Government, Public Notice 51978 (February 2, 1995).

[4] *See In the Matter of Amendment of the Commission's Rules to Provide for Operation of Unlicensed NII Devices in the 5 GHz Frequency Range*, Report and Order, ET Docket No. 96–102, FCC 97–5 (released January 9, 1997), 62 FR 4649, January 31, 1997.

[5] *See Common Carrier Bureau Clarifies and Extends Request for Comment on ACTA Petition Relating to ''Internet Phone'' Software and Hardware—RM No. 8775*, Public Notice, DA 96–414 (March 25, 1996). This latter proceeding was not a notice and comment rulemaking proceeding and would not be covered by our proposal here.

[6] *Access Charge Reform*, Notice of Proposed Rulemaking, Third Report and Order, and Notice of Inquiry, FCC 96–488 (released December 24, 1996), 62 FR 4670, January 31, 1997.

[7] *Improving Commission Processes*, Notice of Inquiry, PP Docket No. 96–17, 11 FCC Rcd 14006 (1996).

[8] *See, e.g.*, GTE comments at 18; NECA comments at 2; SBC comments at 5; FCBA comments at 3–4.

[9] 47 U.S.C. § 257.

[10] Even though these proposed rules involve Commission organization, procedure, and practice normally exempt from notice and comment requirements, *see* 5 U.S.C. § 553(b), we believe it is important to seek public comment on the electronic filing initiative through an open rulemaking process.

[11] *See, e.g.*, Jared Sandberg, ''U.S. Households with Internet Access Doubled to 14.7 Million in Past Year,'' *Wall Street Journal*, October 21, 1996, at B11.

would allow comments to be made available for review on-line in an efficient manner. We therefore tentatively conclude that allowing comments to be filed in electronic format in all rulemaking proceedings (other than broadcast allotment proceedings)[12] would serve the public interest.

9. The FCC rules include specific requirements for comments filed in rulemaking proceedings and considered by the Commission.[13] Comments that do not meet these filing requirements are treated as ''informal'' comments.[14] Several provisions of the rules currently require comments, replies, and other documents to be filed on paper. We tentatively conclude that these rules should be modified so that, to the extent possible, electronically filed comments receive the same treatment and consideration as comments filed on paper. Specific proposed rule changes are set forth below. We seek comment on this conclusion, and on any other rule changes that would be necessary to facilitate electronic filing of comments in rulemaking proceedings. We also ask for comment on whether we should apply these electronic filing procedures to comments or pleadings filed in connection with steps that are preliminary to notice and comment rulemaking—*e.g.*, petitions for rulemaking (other than in broadcast allotment proceedings), notice of inquiry proceedings—as well as petitions for reconsideration and responsive comments or pleadings filed in notice and comment rulemakings other than broadcast allotment proceedings.[15]

10. At this time, we limit our proposal to comments, reply comments, and other documents filed in rulemaking proceedings, other than rulemaking proceedings involving amendments of the FM or television Tables of Allotments. We need more experience with this new system before we expand the scope of the electronic filing option. Moreover, other types of proceedings may present different and more difficult implementation issues. Commenters are free to make suggestions about future implementation in other areas as the Commission considers the broader electronic filing initiative discussed in paragraph 6, above.

*B. Implementation Issues*

11. We believe that formal electronic filing in rulemaking proceedings can be implemented in a reasonable manner that will benefit both the Commission and the public. It is important, however, to address administrative and implementation issues that may arise as we seek to allow formal comments to be filed electronically. In addition, electronic filing will require internal procedures to ensure that comments can be processed and made available for review in a timely manner. Some of these issues are most appropriately addressed in the context of this rulemaking proceeding, while others are best resolved through guidelines that we will establish in subsequent public notices or in notices of proposed rulemaking in specific proceedings. In both cases, however, public input will be beneficial, and thus we seek comment on several topics that we believe should be addressed.

12. We seek comment on the means by which electronic comments in rulemaking proceedings should be submitted to the Commission. For example, we currently require parties to file multiple copies of formal comments with the Secretary, and usually ask that separate copies be submitted to our copy contractor, to facilitate distribution of copies within the Commission. We tentatively conclude that, if comments are filed electronically, parties would need only to submit one electronic ''copy,'' which could automatically be distributed by the FCC to the appropriate Bureaus and Offices, as well as the copy contractor, in electronic form. We seek comment on this approach.

13. In the past, we have accepted informal comments and copies of paper comments via e-mail and diskette. In the interim period before our new electronic comment processing system is operational and we have completed this rulemaking proceeding, we intend to continue and expand the use of diskette and e-mail filing, in order to provide some level of electronic filing availability to the public as soon as possible. Both of these methods, however, require additional processing on the part of FCC staff. Diskettes must be individually loaded onto FCC computers and scanned for computer viruses, files must be manually transferred from each diskette, and FCC staff must extract the necessary filing data such as docket number from the files. Electronic mail also requires additional effort to extract and verify filing data, and to screen e-mail filings for transfer into a central database.

14. In order to reduce these administrative burdens, we therefore tentatively conclude that the primary mechanism for electronic filing of formal comments in rulemaking proceedings should be a World Wide Web page form,[16] through which parties may upload their comments directly into a database or input brief comments directly. This mechanism would allow filing data to be submitted and verified automatically.[17] Parties will continue to be able to obtain paper copies of comments from the Commission or its copy contractor as they currently do, or they can print their own hard copies of the comments directly from the Internet posting. Moreover, a Web page interface will allow parties to use the same system to search for and download comments filed in a proceeding as they do to file their own comments. Such a system will also allow the Commission to provide additional documentation on filing requirements for those parties that require it, through additional Web pages linked to the comment filing form. We seek comment on this proposal. Parties are invited to comment on the feasibility and desirability of other media, such as CD–ROMs and dial-up bulletin board systems, for submitting electronic filings.

15. The security and integrity of comments filed electronically is a significant concern. Our electronic comment processing system will utilize a secure database that can only be modified by authorized FCC staff. Commenters that are particularly concerned about security of their filings, or that lack access to electronic filing capabilities, may always file their comments on paper.

16. We seek comment on whether any special measures are necessary to authenticate or secure electronic comments in rulemaking proceedings. Electronic comments can be forged, but the risk appears to be no greater than with paper comments. If, as our proposed rules reflect,[18] we were to permit electronic filing without any special security measures, other than requiring basic identifying information (such as name, street address, telephone number, and e-mail address) as a point of contact, it would be up to the

[12] *See* footnote 2, *supra*, and ¶ 10, *infra*.

[13] *See, e.g.*, 47 CFR §§ 1.49, 1.419.

[14] 47 CFR § 1.419(b).

[15] If the Commission decides to do so, other rules may need to be modified, including Rule 1.52, 47 CFR § 1.52. *See also* ¶ 20, *infra*.

[16] The FCC Electronic Comment page form is an interactive Internet page designed to accept data in a specified format for transfer to a database.

[17] An automated script would verify that all necessary fields are filled out, and could send a reply message to the party if any information is missing. FCC staff, however, still would likely be required to verify that information provided is accurate, especially with respect to fields such as the docket number of the proceeding.

[18] We have proposed revisions to Section 1.419 to adapt that rule to electronic filings.

commenters, as it is today for paper filings, to identify fraudulent filings. We invite parties to comment on our proposed rule and on whether the benefits of any special authentication or security measures—such as encryption, digital signatures, or account numbers for each commenter—would outweigh the additional administrative difficulties and other concerns about such a requirement.

17. We also seek comment on whether any special procedures should be developed to mitigate frivolous or abusive filings. The Commission has authority to reject such filings.[19] Although we recognize the ease of electronic filing may increase the likelihood that some individuals or groups will make frivolous, abusive, or repetitive filings in this manner, we tentatively conclude that no special procedures should be created to address this concern. We seek comment on whether any rules or procedures are necessary to respond to concerns about frivolous or abusive filings, and we invite parties to suggest measures that would decrease the likelihood of such filings without overly burdening commenters.

18. We tentatively conclude that the filing date and time for comments submitted by electronic mail shall be the date the document is received by the FCC. Although comments filed via the Internet may take time in transit to the FCC due to network congestion or large attached files, we believe that this transmission period will usually be quite short, and that these rules are the only enforceable means for determining when comments are filed. Moreover, basing the filing date on the time of receipt by the FCC tracks our existing rules for paper filings.[20] We plan to implement a confirmation mechanism so that parties filing electronically will receive an automatic acknowledgement specifying the official receipt date and time of their filings. We seek comment on these tentative conclusions, and we invite parties to suggest alternative or additional measures to ensure timely receipt and notification of comment filings.

19. We tentatively conclude that electronic comments will be subject to the same treatment as paper comments, in that comments that are received before the applicable deadline that meet the necessary formalities will be treated as formal filings, and comments that are received after the deadlines, or that fail to meet the necessary formalities, will be treated as informal or *ex parte* filings. Consistent with our existing rules, we tentatively conclude that electronic comments may be received as informal or *ex parte* filings in a non-restricted rulemaking proceeding, until that proceeding is terminated (or the docket is closed) and no longer subject to a petition for reconsideration or clarification, except during the Sunshine Period.[21] We seek comment on these proposals.

20. Finally, if we were to extend the rules to petitions for reconsideration, we tentatively conclude that, where service of documents is required on specific parties (*e.g.*, oppositions to petitions for reconsideration under 47 CFR § 1.429(f)), such service must be made with paper documents, unless the party to be served agrees to accept electronic service of these materials. In such a situation, parties may file electronically with the FCC, but we cannot control the means by which other parties choose to accept information. We seek comment on this tentative conclusion, and we seek comment on possible means of facilitating electronic service.

21. This rulemaking proceeding will address the necessary changes in our rules to make possible formal electronic filings in rulemaking proceedings other than broadcast allotment proceedings. We intend to develop more specific procedural guidelines for filings in subsequent public notices or solicitation of public comment in specific dockets. We anticipate that these guidelines will address issues such as: the specific procedures for filing comments electronically; formatting of electronically filed documents; and alternate methods of obtaining copies of documents filed electronically. We will endeavor to make this information as easily available as possible.

22. We request public input on the specific procedures by which we accept comments electronically. Therefore, we invite parties to comment on any other procedural or administrative issues with respect to electronic filing of comments. For example, how should we specify page limits or file size limits for electronic filings? What file formats should we accept? Should we establish any requirements for formatting of electronic documents, such as paragraph numbering? What would be the standard system for citations to electronically filed comments, since page breaks in a file may differ when viewed or printed on different computer systems? How should service requirements for the Bureau or Office handling a proceeding, and FCC Commissioners, be handled?

## IV. Conclusion

23. We believe that allowing parties to file comments electronically in all FCC notice and comment rulemaking proceedings other than broadcast allotments, and giving those comments the same treatment and consideration as paper comments, will serve the public interest. We encourage parties to comment on the questions we raise in this Notice, so that our electronic filing initiative may be implemented in the most effective manner.

## V. Procedural Issues

### *A. Ex Parte Presentations*

24. This is a non-restricted notice-and-comment rulemaking proceeding. *Ex parte* presentations are permitted, except during the Sunshine Period, provided that they are disclosed as provided in the Commission's rules. *See generally* 47 CFR §§ 1.1202, 1.1203 and 1.1206.

### *B. Initial Regulatory Flexibility Analysis*

25. Section 603 of the Regulatory Flexibility Act, as amended, requires an initial regulatory flexibility analysis in notice and comment rulemaking proceedings, unless we certify that ''the rule will not, if promulgated, have a significant economic impact on a significant number of small entities.'' Our purpose in granting electronically filed comments comparable legal treatment to comments filed on paper is to simplify and clarify the existing rules, and to give parties additional options for filing comments. The modifications do not impose any additional compliance burden on persons dealing with the Commission, including small entities. All parties will still be permitted to file comments on paper, exactly as they do today. We anticipate that the revisions we propose will make it easier for small entities as well as others that wish to file and review comments electronically to do so. Accordingly, we certify, pursuant to Section 605(b) of the Regulatory Flexibility Act, as amended by the Contract with America Advancement Act of 1996 (CWAAA), Public Law 104–121, 110 Stat. 847 (1996), that the rules will not have a significant economic impact on a substantial number of small entities. 5 U.S.C. § 605(b). The Secretary shall send a copy of this Report and Order, including this certification, to the Chief Counsel for Advocacy of the Small

[19] *See, e.g., Commission Taking Tough Measures Against Frivolous Pleadings,* Public Notice, FCC 96–42, 11 FCC Rcd. 3030 (1996).

[20] 47 CFR § 1.7.

[21] *See* 47 CFR §§ 1.1202(f), 1.1203. As now, if *ex parte* filings in a non-restricted proceeding are received during the Sunshine Period, they will be processed in accordance with the *ex parte* rules. *See, e.g.,* 47 CFR § 1.1212.

Business Administration. 5 U.S.C. § 605(b). A copy of this certification will also be published in the **Federal Register**. *Id.*

*C. Initial Paperwork Reduction Act of 1995 Analysis*

26. The requirements proposed herein have been analyzed with respect to the Paperwork Reduction Act of 1995, Public Law 104–13, and found to impose no new or modified information collection requirement on the public. The filing of comments in FCC proceedings is voluntary, and the modifications proposed in this NPRM do not create any new obligations for parties that wish to file comments. Parties may continue to file comments on paper, under exactly the same procedures as applied prior to this NPRM.

*D. Comment Filing Procedures*

27. Pursuant to applicable procedures set forth in sections 1.415 and 1.419 of the Commission's rules, 47 CFR §§ 1.415, 1.419, interested parties may file comments on or before 30 days after publication in the **Federal Register** and reply comments on or before 45 days after publication in the **Federal Register**. For purposes of this proceeding, we hereby waive those provisions of our rules that require formal comments to be filed on paper, and encourage parties to file comments electronically. Electronically filed comments that conform to the guidelines of this section will be considered part of the record in this proceeding and accorded the same treatment as comments filed on paper pursuant to our rules.

28. To file electronic comments in this proceeding, you must use the electronic filing interface available on the FCC's World Wide Web site at <http://www.fcc.gov/comments/commurls.html>. Further information on the process of submitting comments electronically is available at that location. Parties that file comments electronically should also send a copy of any documents filed with the Commission in this docket to the Commission's copy contractor, International Transcription Services, Inc. (ITS), by e-mail to <its__inc@ix.netcom.com>. Information about ITS is available on the World Wide Web at <http://www.itsi.com>.

29. To file paper comments in this proceeding, you must file an original and four copies of all comments, reply comments, and supporting comments. If you would like each Commissioner to receive a personal copy of your paper filings, you must file an original and nine copies. Paper comments and reply comments should be sent to Office of the Secretary, Federal Communications Commission, 1919 M Street, N.W., Room 222, Washington, D.C. 20554. Parties that file paper comments should also submit one copy of any documents filed in this docket with ITS, 2100 M Street, N.W., Suite 140, Washington, D.C. 20037.

30. Comments and reply comments will be available for public inspection during regular business hours in the FCC Reference Center, 1919 M Street, N.W., Room 239, Washington, D.C. 20554. Comments filed electronically through the Internet will also be made available on the FCC's World Wide Web site at <http://www.fcc.gov>.

*E. Contact Person*

31. For further information concerning this proceeding contact Laurence H. Schecker, Office of General Counsel, at (202) 418–1720.

## VI. Ordering Clause

32. Accordingly, *it is ordered* that pursuant to Sections 4(i) and 4(j) of the Communications Act of 1934, as amended, 47 U.S.C. 154 (i), (j), a notice of proposed rulemaking is hereby *adopted*.

## List of Subjects

*47 CFR Part 0*

Organization and functions (Government agencies).

*47 CFR Part 1*

Administrative practice and procedure.

Federal Communications Commission.

**William F. Caton,**

*Acting Secretary.*

## Rule Changes

Parts 0 and 1 of Title 47 of the Code of Federal Regulations are proposed to be amended as follows:

## PART 0—COMMISSION ORGANIZATION

1. The authority citation for part 0 continues to read as follows:

**Authority:** Sec. 5, 48 Stat. 1068, as amended; 47 U.S.C. 155, 225, unless otherwise noted.

2. Section 0.401 is amended by adding paragraph (a)(1)(iii) to read as follows:

### § 0.401 Location of Commission offices.

* * * * *

(a) * * *

(1) * * *

(iii) Electronic filings, where permitted, must be transmitted as specified by the Commission or relevant Bureau or Office.

* * * * *

## PART 1—PRACTICE AND PROCEDURE

1. The authority citation for part 1 continues to read as follows:

**Authority:** 47 U.S.C. 151, 154, 207, 303 and 309(j) unless otherwise noted.

2. Section 1.46 is amended by revising paragraphs (b) and (c) to read as follows:

### § 1.46 Motions for extension of time.

* * * * *

(b) Motions for extension of time in which to file responses to petitions for rulemaking, replies to such responses, comments filed in response to notice of proposed rulemaking, replies to such comments and other filings in rulemaking proceedings conducted under subpart C of this part shall be filed at least 7 days before the filing date. If a timely motion is denied, the responses and comments, replies thereto, or other filings need not be filed until 2 business days after the Commission acts on the motion. In emergency situations, the Commission will consider a late-filed motion for a brief extension of time related to the duration of the emergency and will consider motions for acceptance of comments, reply comments or other filings made after the filing date.

(c) If a motion for extension of time in which to make filings in proceedings other than notice and comment rulemaking proceedings is filed less than 7 days prior to the filing day, the party filing the motion shall (in addition to serving the motion on other parties) orally notify other parties and Commission staff personnel responsible for acting on the motion that the motion has been (or is being) filed.

3. Section 1.47 is amended by revising paragraph (d) to read as follows:

### § 1.47 Service of documents and proof of service.

* * * * *

(d) Documents may be served upon a party, its attorney, or other duly constituted agent by delivering a copy or by mailing a copy to the last known address. When a party is represented by an attorney of record in a formal proceeding, service shall be made upon such attorney. Documents that are required to be served must be served in paper form, even if documents are filed in electronic form with the Commission, unless the party to be served agrees to accept service in some other form.

* * * * *

4. Section 1.49 is amended by revising paragraph (a) and adding new paragraph (f) to read as follows:

**§ 1.49 Specifications as to pleadings and documents.**

(a) All pleadings and documents filed in paper form in any Commission proceeding shall be typewritten or prepared by mechanical processing methods, and shall be filed on A4 (21 cm. × 29.7 cm.) or on 8½ × 11 inch (21.6 cm. × 27.9 cm.) paper with the margins set so that the printed material does not exceed 6½ × 9½ inches (16.5 cm. × 24.1 cm.). The printed material may be in any typeface of at least 12-point (0.42333 cm. or 12/72″) in height. The body of the text must be double spaced with a minimum distance of 7/32 of an inch (0.5556 cm.) between each line of text. Footnotes and long, indented quotations may be single spaced, but must be in type that is 12-point or larger in height, with at least 1/16 of an inch (0.158 cm.) between each line of text. Counsel are cautioned against employing extended single spaced passages or excessive footnotes to evade prescribed pleading lengths. If single-spaced passages or footnotes are used in this manner the pleading will, at the discretion of the Commission, either be rejected as unacceptable for filing or dismissed with leave to be refiled in proper form. Pleadings may be printed on both sides of the paper. Pleadings that use only one side of the paper shall be stapled, or otherwise bound, in the upper left-hand corner; those using both sides of the paper shall be stapled twice, or otherwise bound, along the left-hand margin so that it opens like a book. The foregoing shall not apply to printed briefs specifically requested by the Commission, documents filed in electronic form, official publications, charted or maps, original documents (or admissible copies thereof) offered as exhibits, specially prepared exhibits, or if otherwise specifically provided. All copies shall be clearly legible.

* * * * *

(f) Comments, reply comments, and other documents filed before the close of the reply comment period, may be filed in electronic form in any rulemaking proceeding other than broadcast allotment proceedings. The Commission may adopt specific requirements for formatting and filing of documents submitted in electronic form. For purposes of paragraphs (b) and (c) of this section, and any prescribed pleading lengths, the length of any comment or reply comment filed in electronic form in a rulemaking proceeding shall be equal to the length of the document if printed out and formatted according to the specifications of paragraph (a) of this section.

* * * * *

5. Section 1.419 is amended by adding new paragraphs (d) and (e) to read as follows:

**§ 1.419 Form of comments and replies; number of copies.**

* * * * *

(d) Participants that file comments and replies in electronic form need only submit one copy of those comments, so long as the submission conforms to any procedural or filing requirements established for formal electronic comments.

(e) Comments and replies filed in electronic form by a party represented by an attorney shall include the name, street address, and telephone number of at least one attorney of record. Parties not represented by an attorney that file comments and replies in electronic form shall provide their name, street address, and telephone number.

[FR Doc. 97–9913 Filed 4–18–97; 8:45 am]

BILLING CODE 6712–01–P

---

## DEPARTMENT OF TRANSPORTATION

## Federal Highway Administration

## 49 CFR Part 393

**[FHWA Docket No. MC–96–41; FHWA–97–2289]**

**RIN 2125–AE05**

## Public Meeting To Discuss the Development of the North American Standard for Protection Against Shifting or Falling Cargo

**AGENCY:** Federal Highway Administration (FHWA), DOT.

**ACTION:** Notice of meeting.

**SUMMARY:** The FHWA is announcing a public meeting concerning the development of the North American Cargo Securement Standard. The meeting will include presentations of the results of recently completed research and a discussion of a draft version of the North American Standard for Protection Against Shifting or Falling Cargo.

**DATES:** The meeting will be held on May 3, 1997. It will begin at 9:00 a.m. and end at 5:00 p.m.

**ADDRESSES:** The meeting will be held at the Wyndham Greenspoint Hotel, 12400 Greenspoint Drive, Houston, Texas.

**FOR FURTHER INFORMATION CONTACT:** Mr. Larry W. Minor, Office of Motor Carrier Research and Standards, HCS–10, (202) 366–4009; or Mr. Charles E. Medalen, Office of the Chief Counsel, HCC–20, (202) 366–1354, Federal Highway Administration, 400 Seventh Street, SW., Washington, D. C. 20590. Office hours are from 7:45 a.m. to 4:15 p.m., e.t., Monday through Friday, except Federal holidays.

**SUPPLEMENTARY INFORMATION:**

### Background

On October 17, 1996, the FHWA published an advance notice of proposed rulemaking (ANPRM) concerning the development of the North American Standard for Protection Against Shifting or Falling Cargo (61 FR 54142). The ANPRM indicated that the FHWA is considering proposing amendments to its regulations concerning cargo securement requirements for commercial motor vehicles engaged in interstate commerce. Specifically, the agency is considering adopting new cargo securement guidelines that will be based upon the results of a multi-year comprehensive research program to evaluate current regulations and industry practices. The FHWA requested comments on the process to be used in developing the cargo securement guidelines.

### Standard Development Process

The preliminary efforts at developing the North American Cargo Securement Standard are currently being managed by a drafting group. The drafting group is developing a model set of cargo securement guidelines based upon the results from the multi-year research program. Membership in the drafting group includes representatives from the FHWA, Transport Canada, Canadian Council of Motor Transport Administrators (CCMTA), the Ontario Ministry of Transportation, Quebec Ministry of Transportation—Ontario and Quebec are conducting most of the research—and the Commercial Vehicle Safety Alliance (CVSA).

The meeting on May 3 is intended to serve as part of a process for further developing the guidelines and will involve a review of the work completed to date by the drafting group. The meeting is open to all interested parties. This process is intended to ensure that all interested parties have an opportunity to participate in the development of the guidelines, and to identify and consider the concerns of the Federal, State, and Provincial governments, carriers, shippers, industry groups, and associations as

well as safety advocacy groups and the general public.

For individuals and groups unable to attend the meeting, the FHWA will publish the draft standard in the **Federal Register**. Further, the CCMTA has posted information on the INTERNET. The website is: *http://www.ab.org/ccmta/ccmta.html.*

With regard to future rulemaking notices, the FHWA will publish a separate notice concerning its review of the docket comments sent in response to the ANPRM. That notice will summarize the comments and identify any issues that warrant reconsideration of the standard development process.

## Meeting Information

The meeting will be held on May 3, 1997, at the Wyndham Greenspoint Hotel, 12400 Greenspoint Drive, Houston, Texas. The meeting is scheduled from 9:00 a.m. to 5:00 p.m. and is part of the Commercial Vehicle Safety Alliance's 1997 Spring Workshop. Attendance for the cargo securement meeting is free of charge and open to all interested parties. However, anyone interested in attending any other session or committee meeting of the CVSA's Spring Workshop must register with the CVSA and pay the appropriate registration fee. For further information about registration for other sessions or meetings of the CVSA's Spring Workshop please contact the CVSA at (301) 564–1623.

The FHWA notes that since the CVSA's 1997 Spring Workshop is being held at the Wyndham Greenspoint Hotel, the availability of guest rooms at the hotel is very unlikely. Therefore, those needing hotel accommodations may need to make reservations at other hotels in the vicinity.

## List of Subjects in 49 CFR Part 393

Highway safety, Motor carriers, Motor vehicle safety.

**Authority:** 49 U.S.C. 31136, 31502; 49 CFR 1.48.

**Jill L. Hochman,**

*Acting Associate Administrator, Office of Motor Carriers.*

[FR Doc. 97–10238 Filed 4–18–97; 8:45 am]

BILLING CODE 4910–22–P

## DEPARTMENT OF TRANSPORTATION

## National Highway Traffic Safety Administration

## 49 CFR Part 571

**[Docket No. 97–21; Notice 1]**

**RIN 2127–AG55**

## Federal Motor Vehicle Safety Standards; Metric Conversion

**AGENCY:** National Highway Traffic Safety Administration (NHTSA), DOT.

**ACTION:** Notice of proposed rulemaking.

**SUMMARY:** This document proposes to revise selected Federal Motor Vehicle Safety Standards (FMVSS) by converting English measurements specified in those standards to metric measurements. This document begins the second phase of several rulemaking actions that NHTSA will undertake to implement the Federal policy that the metric system of measurement is the preferred system of weights and measures for United States trade and commerce. The proposed conversions are not intended to make any changes in the stringency of the affected FMVSS.

**DATES:** Comments must be received on or before June 20, 1997.

**ADDRESSES:** All comments should refer to the docket number and notice number in the heading of this notice and be submitted, preferably in ten copies, to: Docket Section, Room 5109, National Highway Traffic Safety Administration, 400 Seventh Street, SW., Washington, DC 20590. Docket hours are 9:30 a.m. to 4 p.m., Monday through Friday.

**FOR FURTHER INFORMATION CONTACT:** Mr. Kevin Cavey, National Highway Traffic Safety Administration, 400 Seventh Street, SW., Washington, DC 20590. Mr. Cavey's telephone number is: (202) 366–5271.

**SUPPLEMENTARY INFORMATION:**

**Outline of Document**

I. Background Information
II. Today's Notice of Proposed Rulemaking
A. Exact Versus Equivalent Conversions
1. Gross Vehicle Weight Ratings
2. Standard No. 219, Windshield zone intrusion, and Standard No. 301, Fuel system integrity
B. ''Mass'' v. ''Weight''
C. Force Measurements
D. Dual Measurements
E. Leadtime
F. Other Changes
III. Regulatory Impacts
A. Executive Order 12866 and DOT Regulatory Policies and Procedures
B. Regulatory Flexibility Act
C. Environmental Impacts
D. Federalism
E. Civil Justice Reform
Proposed Regulatory Text

## I. Background Information

Section 5164 of the Omnibus Trade and Competitiveness Act (Pub. L. 1 00–418), makes it United States (U.S.) policy that the metric system of measurement is the preferred system of weights and measures for United States trade and commerce. Through Executive Order 12770, Federal agencies are directed to comply with the Act by adopting a conversion schedule for their programs by September 30, 1992. In a **Federal Register** document of April 21, 1992 (57 FR 14619), the National Highway Traffic Safety Administration (NHTSA) published its plan to use the metric system in NHTSA programs, and included an implementation schedule to convert the Federal Motor Vehicle Safety Standards (FMVSSs) to metric measurements.

Using the plan, in the **Federal Register** of March 15, 1994 (59 FR 11962), the agency published a notice of proposed rulemaking (NPRM) to convert English system measurements in selected FMVSSs to the metric system. In this first round of conversions, the agency selected the following FMVSSs for which conversions were simple, and relatively straightforward: Standard No. 102, *Transmission shift lever sequence, starter interlock, and transmission braking effect;* Standard No. 103, *Windshield defrosting and defogging systems;* Standard No. 104, *Windshield wiping and washing systems;* Standard No. 107, *Reflecting surfaces;* Standard No. 110, *Tire selection and rims;* Standard No. 112, *Headlamp concealment devices;* Standard No. 114, *Theft protection;* Standard No. 115, *Vehicle identification number—basic requirements;* Standard No. 120, *Tire selection and rims for motor vehicles other than passenger cars;* Standard No. 124, *Accelerator control systems;* Standard No. 126, *Truck-camper loading;* Standard No. 205, *Glazing materials;* Standard No. 206, *Door locks and door retention components;* Standard No. 207, *Seating systems;* Standard No. 212, *Windshield mounting,* and Standard No. 216, *Roof crush resistance.*

NHTSA reviewed the public comments in response to the NPRM, and made certain changes recommended by the commenters. In a final rule of March 14, 1995 (60 FR 13639), the agency converted to the metric system, English measurements in the above named Federal Motor Vehicle Safety Standards (49 CFR 571 *et seq.*).

The final rule discussed principles for NHTSA to follow in converting English measurements to the metric system. These principles are also applicable to the present rulemaking and are discussed below.

## II. Today's Notice of Proposed Rulemaking

In this notice of proposed rulemaking, NHTSA proposes to convert to metric measurements, English measurements in the following Federal Motor Vehicle Safety Standards: Standard No. 101, *Controls and displays;* Standard No. 109, *New pneumatic tires;* Standard No. 111, *Rearview mirrors;* Standard No. 116, *Motor vehicle brake fluids;* Standard No. 117, *Retreaded pneumatic tires;* Standard No. 119, *New pneumatic tires for vehicles other than passenger cars;* Standard No. 123, *Motorcycle controls and displays;* Standard No. 201, *Occupant protection in interior impact;* Standard No. 202, *Head restraints;* Standard No. 203, *Impact protection for the driver from the steering control system;* Standard No. 204, *Steering control rearward displacement;* Standard No. 209, *Seat belt assemblies;* Standard No. 210, *Seat belt assembly anchorages;* Standard No. 219, *Windshield zone intrusion;* Standard No. 220, *School bus rollover protection;* Standard No. 222, *School bus passenger seating and crash protection;* Standard No. 301, *Fuel system integrity;* and Standard No. 302, *Flammability of interior materials*.

As noted above, NHTSA established principles in converting English system measurements to the metric system in the first round of metrication. NHTSA intends to metricate the selected FMVSSs according to the following principles.

### *A. Exact Versus Equivalent Conversions*

With respect to the nature of the conversions to be made, the agency generally favors the use of equivalent conversions [1] because using values stated in integers would facilitate making measurements during compliance testing. However, NHTSA will not use equivalent conversions where there is a specific safety need or other reason to make an exact conversion.

In the majority of cases, the proposed conversions are equivalent conversions. It is the agency's intent that, if made final, these equivalent conversions have no substantive effect on specifications or requirements in the affected standard. Public comment is sought on whether each equivalent conversion would substantively affect the regulatory text. If there would be a substantive effect, comment is requested on the appropriate exact conversion.

In certain cases, exact conversions are proposed. Most of the exact conversions specify the height of lettering, the minimum depth to which the lettering must be impressed, or the maximum height to which it must be embossed. In such situations, manufacturers typically have invested in molds and other materials that produce lettering of very precise sizes. NHTSA does not want the conversion of the required lettering to have the effect of requiring manufacturers to have to change molds and materials.

NHTSA also proposes to use exact conversions for certain other measurements, to avoid a possibility that the standard would become more stringent after the conversion. For each of these proposed conversions, the agency seeks comment on whether use of the equivalent, rather than the exact conversion, would make a substantive difference:

1. Gross Vehicle Weight Ratings (GVWRs)

NHTSA proposes to convert any references to GVWRs to the exact conversion. GVWRs of 10,000 pounds are proposed to be converted to 4536 kilograms and GVWRs of 6,000 pounds are proposed to be converted to 2,722 kilograms. NHTSA is aware that some of the Canadian Motor Vehicle Safety Standards use the equivalent conversions of 4500 kilograms for the 10,000 pound GVWR and 2700 kilograms for the 6000 pound GVWR.

Such an exact GVWR conversion could affect the applicability of some of the FMVSS's to particular vehicles. In the case of standards that apply to vehicles with a GVWR of 10,000 pounds or less, rounding to 4500 kilograms would affect any vehicles between 4501 and 4536 kilograms GVWR. Such vehicles may be excluded from FMVSS's that had applied to them (e.g., Standards Nos. 201, *Occupant protection in interior impact*, and 203, *Impact protection for the driver from the steering control system*, which apply to vehicles with GVWR's of 10,000 pounds or less), or be subject to requirements that had previously not applied to them (e.g, Standard No. 222, *School Bus Passenger Seating and Crash Protection* which applies to vehicles with GVWR's of more than 10,000 pounds).

NHTSA notes that the number of vehicles in the 4501 to 4536 kilogram or 2700 to 2722 kilogram ranges is likely to be very small. NHTSA requests comments on whether to use equivalent conversions or exact conversion.

2. Standard No. 219, Windshield Zone Intrusion, and Standard No. 301, Fuel System Integrity

Under the test conditions of S7.7(b) in Standard No. 219, and the test conditions of S7.1.6(b) in Standard No. 301, certain tested vehicles must be loaded to their unloaded vehicle weight plus 300 pounds. In this NPRM, the agency proposes to convert 300 pounds to 136 kilograms, the equivalent conversion. The Canadian standards have converted 300 pounds to the equivalent conversion of 140 kilograms. In the conversion of 300 pounds, the concern about stringency is particularly relevant because the manufacturers' certification testing for Standards Nos. 208, *Occupant crash protection;* 212, *Windshield mounting;* 219, *Windshield zone intrusion;* and 301, *Fuel system integrity* can be conducted in a single crash test. A slight increase in the load required for Standards Nos. 219 and 301 testing (resulting from a conversion to 140 kilograms) may necessitate the manufacturers conducting a separate crash test for Standard No. 219 and Standard No. 301 certification. To avoid this situation, the agency proposes to convert 300 pounds to the equivalent conversion of 136 kilograms, rather than the equivalent conversion of 140 kilograms.

### *B. ''Mass'' v. ''Weight''*

Kilograms are measures of ''mass,'' not ''weight.'' Thus, in instances in which the safety standards use ''weight'' to mean ''mass'' in describing compliance testing conditions and procedures, or in other instances in which the standards are primarily directed to engineers or other technically trained persons, NHTSA proposes to revise ''weight'' in the regulatory text to ''mass.'' As an example, in Standard No. 116, *Motor vehicle brake fluids*, a sentence in S6.11.1 states: ''At the end of this period, the metal strips are examined for pitting, etching, and weight loss.'' NHTSA proposes to amend this sentence to read: ''At the end of this period, the metal strips are examined for pitting, etching, and loss of mass.''

However, in instances in which the word ''weight'' is part of a term defined at 49 CFR part 571.3, such as ''curb weight,'' ''gross axle mass rating,'' or ''unloaded vehicle weight,'' NHTSA is not making the change. NHTSA proposes not to adopt terms such as ''curb mass,'' ''gross axle mass rating,'' or ''unloaded vehicle mass.'' NHTSA

[1] To illustrate equivalent and exact conversions, an equivalent conversion of two inches would be 51 millimeters, while an exact conversion would be 50.8 millimeters.

will consider amending terms that use ''weight'' in future rulemakings to metrify the safety standards.

While NHTSA is considering changing references in the FMVSSs from ''weight'' to ''mass'', it is also concerned about the effect of such a change. For example, NHTSA is still uncertain whether the general public would be confused by use of the phrase ''Camper mass is _____ kg'' rather than ''Camper weight'' specified in Standard No. 126. In addition, States use terms such as gross vehicle ''weight'' rating as the basis for determining which vehicle registration fees, driver's licensing requirements, and restrictions on use of roads are applicable to particular vehicles. Before making a change from ''weight'' to ''mass,'' NHTSA wants to obtain public comment on each of the proposed changes.

*C. Force Measurements*

Standard No. 220 and Standard No. 222 establish strength requirements for school bus rollover and for school bus passenger seating, respectively. Standard No. 220 requires that a school bus roof withstand a force equal to 1½ times the vehicle weight applied to the roof. Standard No. 222 specifies in part that school bus passenger seats be equipped with cushions that will not separate from the seat at any attachment point when subjected to an upward force of five times the seat cushion weight. When using units of English measurement, both weight and force are expressed in pounds. However, the metric system expresses mass in kilograms and force in Newtons. Thus, in converting forces to the metric system, there is no simple one-to-one conversion when calculating the force that should be applied. Instead, persons conducting tests will need to measure the weight of the seat or vehicle mass in kilograms and multiply each figure by 9.8 $m/s^2$ to convert the figure to Newtons.

In making the metric conversion of the force measurements in Standard No. 220 and Standard No. 222, NHTSA proposes to specify the steps of the conversion in the regulatory language, to minimize the chance of the wrong metric system conversion being made. Specifically, for Standard No. 220, NHTSA proposes to amend the force measurement language (in S4.) to provide that the roof of the vehicle's body structure shall be subjected to a force in Newtons equal to 1½ times the unloaded vehicle weight, measured in kilograms and multiplied by 9.8 $m/s^2$. For Standard No. 222, NHTSA proposes to amend the force measurement language (in S5.1.5) to provide that the seat cushion shall not separate from the seat at any attachment point when subjected to an upward force in Newtons of 5 times the mass of the seat cushion in kilograms and multiplied by 9.8 $m/s^2$. Comment is sought on this proposal to specify the calculation of the metric force measurement for Standards Nos. 220 and 222.

*D. Dual Measurements*

NHTSA also seeks comment on proposed metric conversions of certain tables. When converting the FMVSSs to the metric system, the agency believes that some tables incorporating metric measurements would not be very informative to American mirror or tire manufacturers and retreaders, many of which may be more familiar with English measurements. Therefore, in the case of the mirror and tire standards, it is proposed that the tables and regulatory text provide both the English and metric systems of measurement. Specifically, in Standard No. 111, *Rearview mirrors*, NHTSA proposes to provide both English and metric measurements for radii of curvature specified in Table I—''Conversion Table from Spherometer Dial Reading to Radius of Curvature''. In Standard No. 117, *Retreaded pneumatic tires*, NHTSA proposes to include both p.s.i. and kPa measurements in Table I—''Plies''. In Standard No. 119, *New pneumatic tires for vehicles other than passenger cars*, NHTSA proposes to provide both English and metric measurements in Table I—''Strength Test Plunger Diameter'', Table II—''Minimum Static Breaking Energy'', and Table III—''Endurance Test Schedule''.

If the proposed use of dual measurements is adopted as final, the agency anticipates, at some future date, phasing out the English units of measurement. Public comment is sought generally on this proposal to use dual measurements for the specified tables and on the period of time after which the English units of measurements should be phased out.

*E. Lead Time*

NHTSA proposes that if made final, the changes proposed in this NPRM take effect one year after the publication of the final rule, with manufacturers given the option to comply immediately with the new measurements. NHTSA believes one year is enough lead time for industry to make any necessary changes. NHTSA has consistently stated that it is not the agency's intent to impose unnecessary costs to manufacturers as a result of the metrication process. NHTSA is aware that if some of the proposed changes in the tire standards, were made final, tire mold manufacturers would have to change molds to accommodate the new metric/English measurements. Changing tire molds to accommodate labeling with metric measurements where it is not specified may result in manufacturers incurring significant costs unless sufficient lead time is given so that changes could be made when molds are changed. NHTSA seeks comment on the amount of lead time tire manufacturers should be given so that they could meet any changes that may result if this NPRM were made final. NHTSA specifically asks whether one year is enough lead time to permit tire manufacturers to purchase new molds that would meet the metricated standard, if made final.

*F. Other Changes*

1. Standard No. 207, Seating Systems

As earlier noted, in the final rule of March 14, 1995, NHTSA converted English measurements in Standard No. 207 to the metric system. Subsequently, it was discovered that the conversion resulted in typographical errors in S5.1.2 (part of the section on test procedures), so that the part of the ''seat'' to which force is applied was no longer specific. In this NPRM, NHTSA proposes to correct the second sentence of S5.1.2. to read: ''Apply forces, in Newtons, equal to 20 times the mass of the seat back in kilograms multiplied by 9.8 $m/s^2$ horizontally through the center of gravity of the seat back, as shown in Figure 2 and apply forces, in Newtons, equal to 20 times the mass of the seat bench in kilograms multiplied by 9.8 $m/s^2$ horizontally through the center of gravity of the seat bench, as shown in Figure 3.''

2. Standard No. 210, Seat Belt Assembly Anchorages

NHTSA also proposes to correct an error in the figures for Standard No. 210. Specifically, Figure 2, ''Body Block for Lap Belt Anchorage'' should have been removed when Figures 2A and 2B were added to the standard (See 55 FR 17984, April 30, 1990). NHTSA notes that since Figure 2 and Figure 2A are technically equivalent, the duplication of the two figures did not create conflicting requirements in Standard No. 210.

3. Removing Outdated Language

NHTSA further proposes to remove outdated language in Standard No. 204 and Standard No. 210. Specifically, in Standard No. 204, *Steering control rearward displacement*, NHTSA proposes to remove S4.1, that refers to

vehicles manufactured before September 1, 1991. In Standard No. 210, *Seat belt assembly anchorages,* NHTSA proposes to remove S4.3.1.5, that refers to vehicles manufactured between September 1, 1992 and September 1, 1993.

## III. Regulatory Impacts

### *A. Executive Order 12866 and DOT Regulatory Policies and Procedures*

NHTSA has examined the impact of this rulemaking action under E.O. 12866 and the Department of Transportation's regulatory policies and procedures. This rulemaking document was not reviewed under E. O. 12866, ''Regulatory Planning and Review.'' This action has been determined to be not ''significant'' under DOT's regulatory policies and procedures. In converting the Federal Motor Vehicle Safety Standards from the English to the metric measurement system, the agency proposes conversions that would not substantively change the performance requirements of the FMVSS's. If this rule is made final, manufacturers now providing consumer information (e.g., labeling) may incur minimal additional costs since they would have to change their information to add the metric units. However, the agency believes additional costs would be minuscule, since manufacturers currently label and provide consumer information in English units. The impacts of this action would be so minor that a full regulatory evaluation for this proposed rule has not been prepared.

### *B. Regulatory Flexibility Act*

The agency has also considered the effects of this rulemaking action under the Regulatory Flexibility Act (5 U.S.C. 601 *et seq.*). I certify that this proposed rule would not, if promulgated, have a significant economic impact on a substantial number of small entities. The rationale for this certification is that no substantive change resulting from converting the FMVSS from the English system to the metric system will be made to the performance requirements of any of the Federal Motor Vehicle Safety Standards. Manufacturers that qualify as small businesses that do not now label their products in metric units or provide consumer information in metric units would incur some costs to include metric labeling. However, the agency believes such costs would be minimal, given these manufacturers are currently labeling and providing the consumer information in English units.

### *C. Environmental Impacts*

In accordance with the National Environmental Policy Act of 1969, the agency has considered the environmental impacts of this proposed rule and determined that, if adopted as a final rule, it would not have a significant impact on the quality of the human environment.

### *D. Federalism*

This action has been analyzed in accordance with the principles and criteria contained in Executive Order 12612, and it has been determined that the proposed rulemaking does not have sufficient federalism implications to warrant the preparation of a Federalism Assessment.

### *E. Civil Justice Reform*

This proposed rule would not have a retroactive effect. Under Section 103(d) of the National Traffic and Motor Vehicle Safety Act (15 U.S.C. 1392(d)), whenever a Federal motor vehicle safety standard is in effect, a state may not adopt or maintain a safety standard applicable to the same aspect of performance which is not identical to the Federal standard. Section 105 of the Act (15 U.S.C. 1394) sets forth a procedure for judicial review of final rules establishing, amending or revoking Federal motor vehicle safety standards. That section does not require submission of a petition for reconsideration or other administrative proceedings before parties may file suit in court.

## Public Comments

Interested persons are invited to submit comments on the proposal. It is requested, but not required, that 10 copies be submitted.

All comments must not exceed 15 pages in length. (49 CFR 553.21). Necessary attachments may be appended to these submissions without regard to the 15-page limit. This limitation is intended to encourage commenters to detail their primary arguments in a concise fashion.

If a commenter wishes to submit certain information under a claim of confidentiality, three copies of a complete submission, including purportedly confidential business information, should be submitted to the Chief Counsel, NHTSA, at the street address given above, and seven copies from which the purportedly confidential information has been deleted should be submitted to the Docket Section. A request for confidentiality should be accompanied by a cover letter setting forth the information specified in the agency's confidential business information regulation. 49 CFR part 512.

All comments received before the close of business on the comment closing date indicated above for the proposal will be considered, and will be available for examination in the docket at the above address both before and after that date. To the extent possible, comments filed after the closing date will also be considered. Comments received too late for consideration in regard to the final rule will be considered as suggestions for further rulemaking action. Comments on the proposal will be available for inspection in the docket. The NHTSA will continue to file relevant information as it becomes available in the docket after the closing date, and it is recommended that interested persons continue to examine the docket for new material.

Those persons desiring to be notified upon receipt of their comments in the rules docket should enclose a self-addressed, stamped postcard in the envelope with their comments. Upon receiving the comments, the docket supervisor will return the postcard by mail.

## List of Subjects in 49 CFR Part 571

Imports, Motor vehicle safety, Motor vehicles, Rubber and rubber products, Tires.

In consideration of the foregoing, it is proposed that the Federal Motor Vehicle Safety Standards (49 CFR Part 571), be amended as set forth below.

## PART 571—FEDERAL MOTOR VEHICLE SAFETY STANDARDS

1. The authority citation for part 571 would continue to read as follows:

**Authority:** 49 U.S.C. 322, 30111, 30115, 30117, and 30166; delegation of authority at 49 CFR 1.50.

2. Section 571.101 would be amended by revising S5(a) and revising S5.3.5 to read as follows:

### § 571.101 Standard No. 101; Controls and displays.

* * * * *

S5. *Requirements.* (a) Except as provided in paragraph (b) of this section, each passenger car, multipurpose passenger vehicle, truck and bus manufactured with any control listed in S5.1 or in column 1 of Table 1, and each passenger car, multipurpose passenger vehicle and truck or bus less than 4,536 kg GVWR with any display listed in S5.1 or in column 1 of Table 2 shall meet the requirements of this standard for the location, identification,

and illumination of such control or display.

* * * * *

S5.3.5 Any source of illumination within the passenger compartment which is forward of a transverse vertical plane 110 mm rearward of the mannikin ''H'' point with the driver's seat in its rearmost driving position, which is not used for the controls and displays regulated by this standard, which is not a telltale, and which is capable of being illuminated while the vehicle is in motion, shall have either (1) light intensity which is manually or automatically adjustable to provide at least two levels of brightness, (2) a single intensity that is barely discernible to a driver who has adapted to dark ambient roadway conditions, or (3) a means of being turned off. This requirement does not apply to buses that are normally operated with the passenger compartment illuminated.

* * * * *

3. Section 571.101 would be amended by revising Table 2 at the end of S6 and following Table 1(a) to read as follows:

BILLING CODE 4910–59–P

**Table 2**
**Identification and Illumination of Displays**

| Column 1 | Column 2 | Column 3 | Column 4 | Column 5 |
|---|---|---|---|---|
| *Display* | *Telltale Color* | *Identifying Words or Abbreviation* | *Identifying Symbol* | *Illumination* |
| TURN SIGNAL Telltale | Green | Also see FMVSS 108 | [1] [6] | — |
| HAZARD WARNING Telltale | — | Also see FMVSS 108 | [2] [6] | — |
| SEAT BELT Telltale | —[7] | Fasten Belts or Fasten Seat Belts. Also see FMVSS 208. | or | — |
| FUEL LEVEL Telltale | — | Fuel | or | — |
| Gauge | — | | | Yes |
| OIL PRESSURE Telltale | — | Oil | | — |
| Gauge | — | | | Yes |
| COOLANT TEMPERATURE Telltale | — | Temp | | — |
| Gauge | — | | | Yes |
| ELECTRICAL CHARGE Telltale | — | Volts, Charge or Amp | | — |
| Gauge | — | | | Yes |
| HIGHBEAM Telltale | Blue or Green[4] | Also see FMVSS 108 | [6] | — |
| MALFUNCTION IN Anti-Lock or | Yellow | Antilock, Anti-lock, or ABS, Also see FMVSS 105 | — | — |
| Brake System | Red[4] | Brake, Also see FMVSS 105 | — | — |
| BRAKE AIR PRESSURE Position Telltale | — | Brake Air, Also see FMVSS 121 | — | — |
| SPEEDOMETER | — | m/h km/h[5] | — | Yes |
| ODOMETER | — | —[3] | — | — |
| AUTOMATIC GEAR POSITION | — | Also see FMVSS 102 | — | Yes |

[1] The pair of arrows is a single symbol. When the indicator for left and right turn operate independently, however, the two arrows will be considered separate symbols and may be spaced accordingly.

[2] Not required when arrows of turn signal tell-tales that otherwise operate independently flash simultaneously as hazard warning tell-tale.

[3] If the odometer indicates kilometers, then "KILOMETERS" or "km" shall appear, otherwise, no identification is required.

[4] Red can be red-orange. Blue can be blue-green.

[5] If the speedometer is graduated in miles per hour and in kilometers per hour, the identifyig words or abbreviations shall be "MPH" and "km/h" in any combination of upper or lower case letters.

[6] Framed areas may be filled.

[7] The color of the telltale required by §4.5.3.3 of Standard No. 208 is red; the color of the telltale required by §7.3 of Standard No. 208 is not specified.

BILLING CODE 4910–59–C

4. Section 571.109 would be amended by revising in S4.2.1, paragraph (d); revising S4.2.2.3.1; revising S4.2.2.3.2; revising the first sentence of S4.3 *Labeling Requirements* introductory paragraph; revising the first sentence of S4.3.5; revising S5.2.2.1; revising S5.3.2.1; revising S5.3.2.3; revising S5.4.1.2; revising S5.4.2.1; revising S5.4.2.2; revising S5.4.2.3; revising S5.5.2; revising S5.5.3; and revising S5.5.4 to read as follows:

**§ 571.109 Standard No. 109; New pneumatic tires.**

* * * * *

S4.2.1 *General.* Each tire shall conform to each of the following:

* * * * *

(d) It shall incorporate a tread wear indicator that will provide a visual indication that the tire has worn to a tread depth of 2 mm (1/16 inch).

* * * * *

S4.2.2.3 *Tubeless tire resistance to bead unseating.*

S4.2.2.3.1 When a tubeless tire that has a maximum inflation pressure other than 414 kPa (60 psi) is tested in accordance with S5.2, the applied force required to unseat the tire bead at the point of contact shall be not less than:

(a) 6,672 N (1,500 pounds) for tires with a designated section width of less than 152 mm (6 inches);

(b) 8,896 N (2,000 pounds) for tires with a designated section width of 152 mm (6 inches) or more but less than 203 mm (8 inches);

(c) 11,120 N (2,500 pounds) for tires with a designated section width of 203 mm (8 inches) or more, using the section width specified in a submission made by an individual manufacturer, pursuant to S4.4.1(a), or in one of the publications described in S4.4.1(b) for the applicable tire size designation and type.

S4.2.2.3.2 When a tire that has a maximum inflation pressure of 414 kPa (60 psi) is tested in accordance with S5.2, the applied force required to unseat the bead at the point of contact shall be not less than:

(a) 6,672 N (1,500 pounds) for tires with a maximum load rating of less than 399 kg (880 pounds);

(b) 8,896 N (2,000 pounds) for tires with a maximum load rating of 399 kg (880 pounds) or more but less than 635 kg (1,400 pounds);

(c) 11,120 N (2,500 pounds) for tires with a maximum load rating of 635 kg (1,400 pounds) or more, using the maximum load rating marked on the sidewall of the tire.

* * * * *

S4.3 *Labeling Requirements.* Except as provided in S4.3.1 and S4.3.2, each tire shall have permanently molded into or onto both sidewalls, in letters and numerals not less than 2 mm (0.078 inches) high, the information shown in paragraphs S4.3 (a) and (g). * * *

* * * * *

S4.3.5 If the maximum inflation pressure of a tire is 414 kPa (60 psi), the tire shall have permanently molded into or onto both sidewalls, in letters and numerals not less than 13 mm (½ inch), the words ''Inflate to 60 psi'' or ''Inflate to 414 kPa (60 psi)''. * * *

* * * * *

S5.2.2 *Test procedure.*

S5.2.2.1 Apply a load through the block to the tire outer sidewall at the distance specified in Figure 1 for the applicable wheel size at a rate of 51 mm (2 inches) per minute, with the load arm substantially parallel to the tire and rim assembly at the time of engagement.

* * * * *

S5.3.2 *Test procedure.*

S5.3.2.1 Force a 19 mm (¾ inch) diameter cylindrical steel plunger with a hemispherical end perpendicularly into the tread rib as near to the centerline as possible, avoiding penetration into the tread groove, at the rate of 51 mm (2 inches) per minute.

* * * * *

S5.3.2.3 Compute the breaking energy for each test point by means of one of the two following formulas:

$W = [(F \times P)/2] \times 10^3$ (Joules)

Where

W = Energy, in Joules;
F = Force, Newtons; and
P = Penetration, mm; or

$W = [(F \times P)/2]$

Where

W = Energy, inch-pounds;
F = Force, pounds; and
P = Penetration, inches.

* * * * *

S5.4.1.2 Condition the tire assembly to 38°±2° C (100°±5° F) for at least three hours.

* * * * *

S5.4.2.1 Mount the tire and wheel assembly on a test axle and press it against a flat-faced steel test wheel 1708 mm (67.23 inches) in diameter and at least as wide as the section width of the tire to be tested or an approved equivalent test wheel, with the applicable test load specified in the table in S5.4.2.3 for the tire's size designation, type and maximum permissible inflation pressure.

S5.4.2.2 During the test, the air surrounding the test area shall be 38°±2° C (100°±5° F).

S5.4.2.3 Conduct the test at 80 kilometers per hour (km/h)(50 miles per hour) in accordance with the following schedule without pressure adjustment or other interruptions:

The loads for the following periods are the specified percentage of the maximum load rating marked on the tire sidewall:

| | Percent |
|---|---|
| 4 hours | 85 |
| 6 hours | 90 |
| 24 hours | 100 |

* * * * *

S5.5 *High speed performance.*

* * * * *

S5.5.2 Break in the tire by running it for 2 hours at 80 km/h (50 mph).

S5.5.3 Allow to cool to 38°±2° C (100°±5° F) and readjust the inflation pressure to the applicable pressure specified in Table II.

S5.5.4 Without readjusting inflation pressure, test at 121 km/h (75 mph) for 30 minutes, 129 km/h (80 mph) for 30 minutes, and 137 km/h (85 mph) for 30 minutes.

* * * * *

5. In § 571.109, Figure 1—''Bead Unseating Fixture—Dimensions in Inches'', the Table titled ''Figures for Standard No. 109,'' Figure 2—''Diagram of Beat Unseating Block Dimensions in Inches'', and Figure 2A—''Diagram of Bead Unseating Block—Dimensions in Inches'' after S6, and preceding Appendix A, would be revised to read as follows:

BILLING CODE 4910–59–P

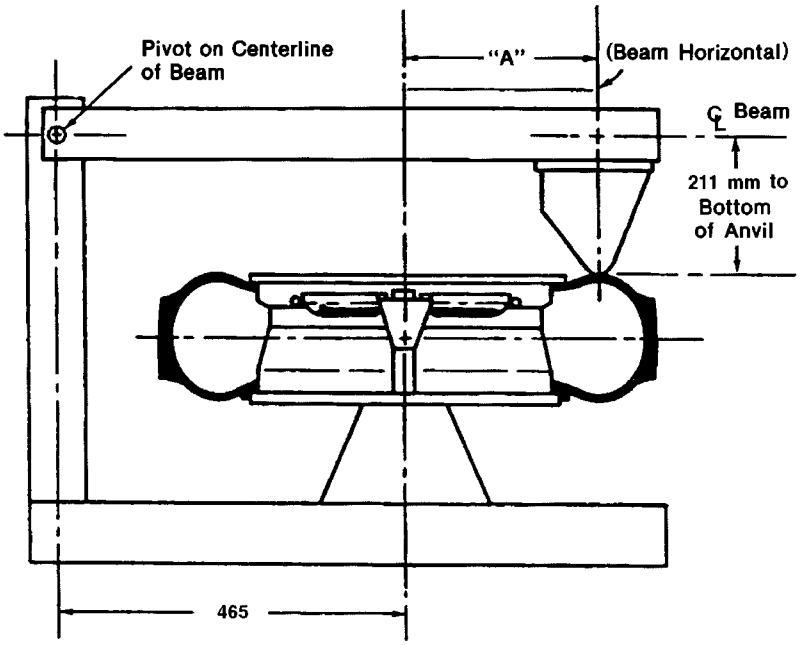


**Figure 1.—Bead Unseating Fixture**
**All dimensions in millimeters (mm)**

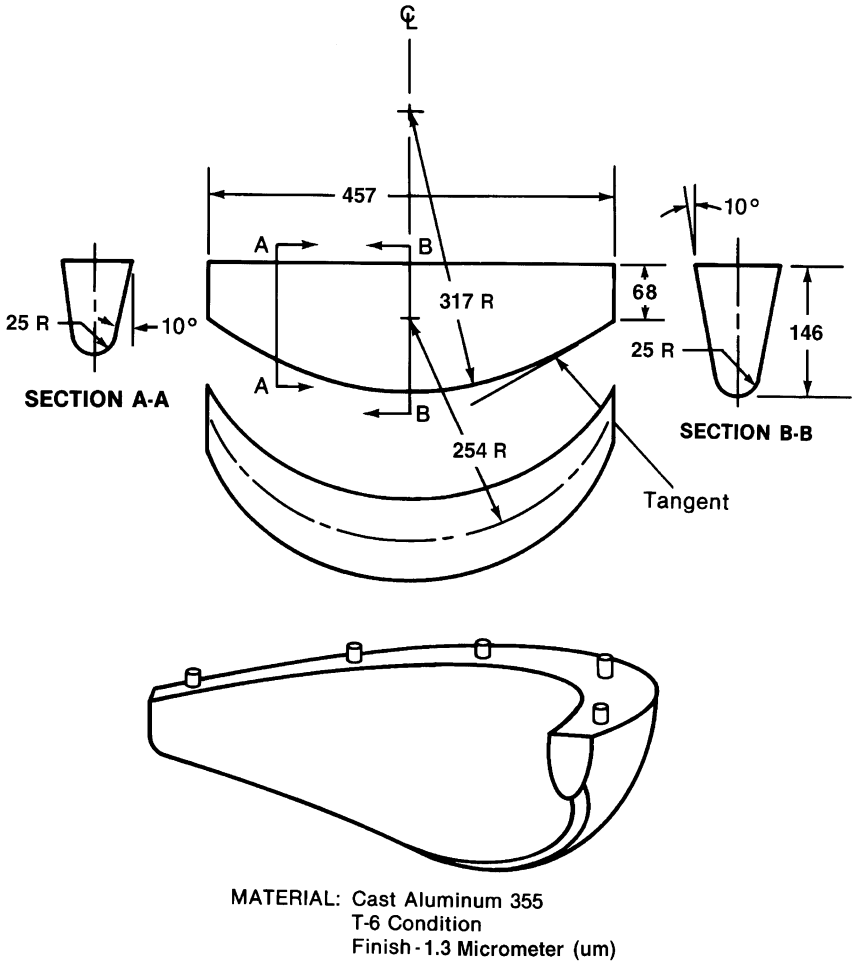


**Figure 2.—Diagram of Bead Unseating Block—Dimensions in millimeters (mm)**

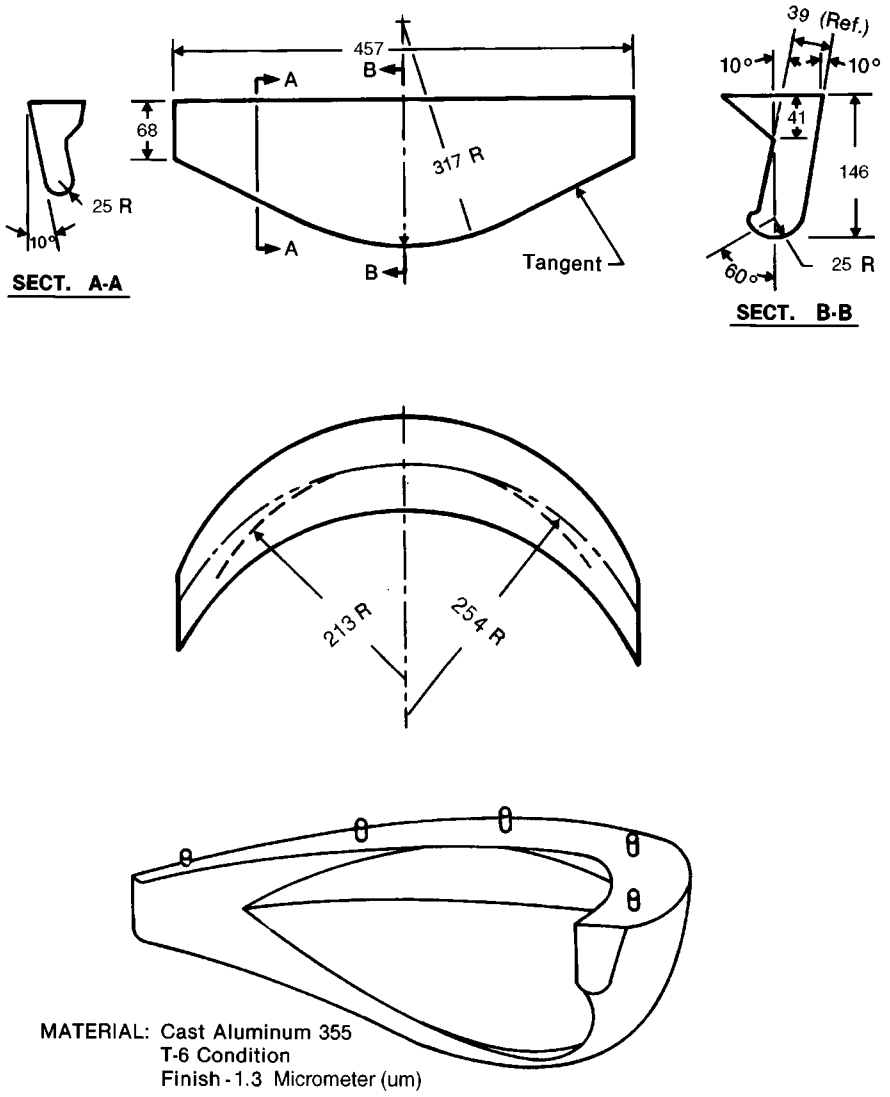


**Figure 2A.—Diagram of Bead Unseating Block—Dimensions in millimeters (mm)**

BILLING CODE 4910–59–C

(Accompanies Figure 1)

Figures for Standard 109

| Wheel sizes | Dimension "A" for tires with maximum inflation pressure | | | |
|---|---|---|---|---|
| | Other than 60 psi | Other than 414 kPa | 60 psi | 414kPa |
| 19 inches | 13.00 in | 330 mm | 12.00 in | 305 mm |
| 18 inches | 12.50 in | 318 mm | 11.40 in | 290 mm |
| 17 inches | 12.00 in | 305 mm | 10.60 in | 269 mm |
| 16 inches | 11.50 in | 292 mm | 9.90 in | 251 mm |
| 15 inches | 11.00 in | 279 mm | 9.40 in | 239 mm |
| 14 inches | 10.50 in | 267 mm | 8.90 in | 226 mm |
| 13 inches | 10.00 in | 254 mm | 8.40 in | 213 mm |
| 12 inches | 9.50 in | 241 mm | | |
| 11 inches | 9.00 in | 229 mm | | |
| 10 inches | 8.50 in | 216 mm | | |
| 320 mm | 8.50 in | 216 mm | | |
| 340 mm | 9.00 in | 229 mm | | |
| 345 mm | 9.25 in | 235 mm | | |
| 365 mm | 9.75 in | 248 mm | | |
| 370 mm | 10.00 in | 254 mm | | |
| 390 mm | 11.00 in | 279 mm | | |
| 415 mm | 11.50 in | 292 mm | | |
| 400 mm[1] | 10.25 in | 260 mm | | |
| 425 mm[1] | 10.75 in | 273 mm | | |
| 450 mm[1] | 11.25 in | 286 mm | | |
| 475 mm[1] | 11.75 in | 298 mm | | |
| 500 mm[1] | 12.25 in | 311 mm | | |

[1] For CT Tires only.

6. In § 571.109, in Appendix A, Table 1–A—"For Bias Ply Tires with Designated Section Width of 6 Inches and Above", Table 1–B "For Bias Ply Tires with Designated Section Width Below 6 Inches", Table 1–C "For Radial Ply Tires", Table 1–D "For Tires with 60 lb/in$^2$ Maximum Permissible Inflation Pressure and Maximum Load Rating Below 880 Lb. And Above", 2nd Table 1–E "For Tires With 60 lb/in$^2$ Maximum Permissible Inflation Pressure and Maximum Load Rating Below 880 Lb",would be revised to read as follows:

**Appendix A—Federal Motor Vehicle Safety Standard No. 109**

* * * * *

TABLE I–A.—FOR BIAS PLY TIRES WITH DESIGNATED SECTION WIDTH OF 152 mm (6 INCHES) AND ABOVE

| Cord material | 32 psi | 36 psi | 40 psi | 240 kPa | 280 kPa | 300 kPa | 340 kPA |
|---|---|---|---|---|---|---|---|
| Rayon (in-lbs) | 1,650 | 2,574 | 3,300 | 1,650 | 3,300 | 1,650 | 3,300 |
| (Joules) | 186 | 291 | 373 | 186 | 373 | 186 | 373 |
| Nylon or polyester (in-lbs) | 2,600 | 3,900 | 5,200 | 2,600 | 5,200 | 2,600 | 5,200 |
| (Joules) | 294 | 441 | 588 | 294 | 588 | 294 | 588 |

TABLE I–B.—FOR BIAS PLY TIRES WITH DESIGNATED SECTION WIDTH BELOW 152 MM (6 INCHES)

| Cord material | 32 psi | 36 psi | 40 psi | 240 kPa | 280 kPa | 300 kPa | 340 kPA |
|---|---|---|---|---|---|---|---|
| Rayon (in-lbs) | 1,000 | 1,875 | 2,500 | 1,000 | 2,500 | 1,000 | 2,500 |
| (Joules) | 113 | 212 | 282 | 113 | 282 | 113 | 282 |
| Nylon or polyester (in-lbs) | 1,950 | 2,925 | 3,900 | 1,950 | 3,900 | 1,950 | 3,900 |
| (Joules) | 220 | 330 | 441 | 220 | 441 | 220 | 441 |

TABLE I–C.—FOR RADIAL PLY TIRES

| Size designation | Maximum permissible inflation | | | | | | | | | | | |
|---|---|---|---|---|---|---|---|---|---|---|---|---|
| | Tires other than CT tires | | | | | | | | CT Tires | | | |
| | PSI | | | kPa | | | | | kPa | | | |
| | 32 | 36 | 40 | 240 | 280 | 300 | 340 | 350 | 290 | 330 | 350 | 390 |
| Below 160 mm (in-lbs) | 1,950 | 2,925 | 3,900 | 1,950 | 3,900 | 1,950 | 3,900 | 1,950 | 1,950 | 3,900 | 1,950 | 3,900 |
| (Joules) | 220 | 330 | 441 | 220 | 441 | 220 | 441 | 220 | 220 | 441 | 220 | 441 |
| 160 mm or above (in-lbs) | 2,600 | 3,900 | 5,200 | 2,600 | 5,200 | 2,600 | 5,200 | 2,600 | 2,600 | 5,200 | 2,600 | 5,200 |
| (Joules) | 294 | 441 | 588 | 294 | 588 | 294 | 588 | 294 | 294 | 588 | 294 | 588 |

TABLE I–D—FOR TIRES WITH 414 kPa (60 PSI) MAXIMUM PERMISSIBLE INFLATION PRESSURE AND MAXIMUM LOAD RATING 399 kg (880 lb) AND ABOVE

| Cord material | Inch-pounds Joules (J) |
|---|---|
| Rayon | 1,650 inch pounds. 186 Joules (J). |
| Nylon or Polyester | 2,600 inch pounds. 294 Joules (J). |

TABLE I–E—FOR TIRES WITH 414 kPa (60 PSI) MAXIMUM PERMISSIBLE INFLATION PRESSURE AND MAXIMUM LOAD RATING BELOW 399 kg (880 lb)

| Cord material | Inch-pounds Joules (J) |
|---|---|
| Rayon | 1,000 inch pounds. 113 Joules (J). |
| Nylon or Polyester | 1,950 inch pounds. 220 Joules (J). |

7. § 571.111 would be amended by revising S5.1.1; revising S5.1.2; revising S5.2.1; revising S5.4.2; revising S5.4.3; revising S6.1; revising S7.1; revising S8.1; revising S9.2; revising S9.3; revising S10.1; revising S12.2; revising S12.3; revising S12.4; and revising S13.2 to read as follows:

**§ 571.111 Standard No. 111; Rearview mirrors.**

* * * * *

S5.1.1 *Field of view.* Except as provided in S5.3, the mirror shall provide a field of view with an included horizontal angle measured from the projected eye point of at least 20 degrees, and sufficient vertical angle to provide a view of a level road surface extending to the horizon beginning at a point not greater than 61 m to the rear of the vehicle when the vehicle is occupied by the driver and four passengers or the designated occupant capacity, if less, based on an average occupant weight of 68 kg. The line of sight may be partially obscured by seated occupants or by head restraints. The location of the driver's eye reference points shall be those established in Motor Vehicle Safety Standard No. 104 (§ 571.104) or a nominal location appropriate for any 95th percentile male driver.

S5.1.2 *Mounting.* The mirror mounting shall provide a stable support for the mirror, and shall provide for mirror adjustment by tilting in both the horizontal and vertical directions. If the mirror is in the head impact area, the mounting shall deflect, collapse or break away without leaving sharp edges when the reflective surface of the mirror is subjected to a force of 400 N in any forward direction that is not more than 45° from the forward longitudinal direction.

S5.2 *Outside rearview mirror—driver's side.*

S5.2.1 *Field of view.* Each passenger car shall have an outside mirror of unit magnification. The mirror shall provide the driver a view of a level road surface extending to the horizon from a line, perpendicular to a longitudinal plane tangent to the driver's side of the vehicle at the widest point, extending 2.4 m out from the tangent plane 10.7 m behind the driver's eyes, with the seat in the rearmost position. The line of sight may be partially obscured by rear body or fender contours. The location of the driver's eye reference points shall be those established in Motor Vehicle Safety Standard No. 104 (§ 571.104) or a nominal location appropriate for any 95th percentile male driver.

* * * * *

S5.4.2 Each convex mirror shall have permanently and indelibly marked at the lower edge of the mirror's reflective surface, in letters not less than 4.8 mm nor more than 6.4 mm high the words ''Objects in Mirror Are Closer Than They Appear.''

S5.4.3 The average radius of curvature of each such mirror, as determined by using the procedure in S12., shall be not less than 889 mm and not more than 1,651 mm.

S6. *Requirements for multipurpose passenger vehicles, trucks, and buses, other than school buses, with GVWR of 4,536 kg or less.*

S6.1 Each multipurpose passenger vehicle, truck and bus, other than a school bus, with a GVWR of 4,536 kg or less shall have either——

(a) Mirrors that conform to the requirements of S5.; or

(b) Outside mirrors of unit magnification, each with not less than 12581 mm² of reflective surface, installed with stable supports on both sides of the vehicle, located so as to provide the driver a view to the rear along both sides of the vehicle, and adjustable in both the horizontal and vertical directions to view the rearward scene.

S7. *Requirements for multipurpose passenger vehicles and trucks with a GVWR of more than 4,536 and less than 11,340 kg and buses, other than school buses, with a GVWR of more than 4,536 kg.*

S7.1 Each multipurpose passenger vehicle and truck with a GVWR of more than 4,536 kg and less than 11,340 kg and each bus, other than a school bus, with a GVWR of more than 4,536 kg shall have outside mirrors of unit magnification, each with not less than 32260 mm² of reflective surface, installed with stable supports on both sides of the vehicle. The mirrors shall be located so as to provide the driver a view to the rear along both sides of the vehicle and shall be adjustable both in the horizontal and vertical directions to view the rearward scene.

S8. *Requirements for multipurpose passenger vehicles and trucks with a GVWR of 11,340 kg or more.*

S8.1 Each multipurpose passenger vehicle and truck with a GVWR of 11,340 kg or more shall have outside mirrors of unit magnification, each with not less than 32260 mm² of reflective surface, installed with stable supports on both sides of the vehicle. The mirrors shall be located so as to provide the driver a view to the rear along both sides of the vehicle and shall be adjustable both in the horizontal and

vertical directions to view the rearward scene.

S9. *Requirements for School Buses.*

* * *

* * * * *

S9.2 System A shall be located with stable supports so that the portion of the system on the bus's left side, and the portion on its right side, each:

(a) Includes at least one mirror of unit magnification with not less than 32260 $mm^2$ of reflective surface; and

(b) Includes one or more mirrors which together provide, at the driver's eye location, a view of:

(1) For the mirror system on the right side of the bus, the entire top surface of cylinder N in Figure 2, and of that area of the ground which extends rearward from the mirror surface not less than 61 meters.

(2) For the mirror system on the left side of the bus, the entire top surface of cylinder M in Figure 2, and of that area of the ground which extends rearward from the mirror surface not less than 61 meters.

S9.3(a) For each of the cylinders A though P whose entire top surface is not directly visible from the driver's eye location, System B shall provide, at that location:

(1) A view of the entire top surface of that cylinder.

(2) A view of the ground that overlaps with the view of the ground provided by System A.

(b) Each mirror installed in compliance with S9.3(a) shall meet the following requirements:

(1) Each mirror shall have a projected area of at least 25800 $mm^2$, as measured on a plane at a right angle to the mirror's axis.

(2) Each mirror shall be located such that the distance from the center point of the eye location of a 25th percentile adult female seated in the driver's seat to the center of the mirror shall be at least 9525 $mm^2$.

(3) Each mirror shall have no discontinuities in the slope of the surface of the mirror.

(4) Each mirror shall be installed with a stable support.

(c) Each school bus which has a mirror installed in compliance with S9.3(a) that has an average radius of curvature of less than 889 mm, as determined under S12, shall have a label visible to the seated driver. The label shall be printed in a type face and color that are clear and conspicuous. The label shall state the following:

USE CROSS VIEW MIRRORS TO VIEW PEDESTRIANS WHILE BUS IS STOPPED. DO NOT USE THESE MIRRORS TO VIEW TRAFFIC WHILE BUS IS MOVING. IMAGES IN SUCH MIRRORS DO NOT ACCURATELY SHOW ANOTHER VEHICLE'S LOCATION

* * * * *

S10. *Requirements for motorcycles.*

S10.1 Each motorcycle shall have either a mirror of unit magnification with not less than 8065 $mm^2$ of reflective surface, or a convex mirror with not less than 6450 $mm^2$ of reflective surface and an average radius of curvature not less than 508 mm and not greater than 1524 mm, installed with a stable support, and mounted so that the horizontal center of the reflective surface is at least 279 mm outward of the longitudinal centerline of the motorcycle. The mirror shall be adjustable by tilting in both the horizontal and vertical directions.

* * * * *

S12. *Determination of radius of curvature.*

* * * * *

S12.2 The 3-point linear spherometer has two outer fixed legs 38 mm apart and one inner movable leg at the midpoint. The spherometer has a dial indicator with a scale that can be read accurately to .0025 mm, with the zero reading being a flat surface.

S12.3 The 10 test positions on the image display consist of two positions at right angles to each other at each of five locations as shown in Figure 1. The locations are at the center of the mirror, at the left and right ends of a horizontal line that bisects the mirror and at the top and bottom ends of a vertical line that bisects the mirror. None of the readings are within a 6.4 mm border on the edge of the image display.

S12.4 At each position, the spherometer is held perpendicular to the convex mirror-surface and a record is made of the reading on the dial indicator to the nearest .0025 mm.

* * * * *

S13.2 The cylinders are 0.3048 meters (m) high and 0.3048 meters (m) in diameter, except for cylinder P which is 0.9144 meters (m) high and 0.3048 meters (m) in diameter.

* * * * *

8. In § 571.111, Table I-''Conversion Table from Spherometer Dial Reading to Radius of Curvature'', following Figure 1 in S12.8, would be revised to read as follows:

TABLE I.—CONVERSION TABLE FROM SPHEROMETER DIAL READING TO RADIUS OF CURVATURE

| Dial reading | Radius of curvature (inches) | Radius of curvature (mm) |
|---|---|---|
| .00330 | 85.2 | 2164.1 |

TABLE I.—CONVERSION TABLE FROM SPHEROMETER DIAL READING TO RADIUS OF CURVATURE—Continued

| Dial reading | Radius of curvature (inches) | Radius of curvature (mm) |
|---|---|---|
| .00350 | 80.4 | 2042.2 |
| .00374 | 75.2 | 1910.1 |
| .00402 | 70.0 | 1778.0 |
| .00416 | 67.6 | 1717.0 |
| .00432 | 65.1 | 1653.5 |
| .00450 | 62.5 | 1587.5 |
| .00468 | 60.1 | 1526.5 |
| .00476 | 59.1 | 1501.1 |
| .00484 | 58.1 | 1475.7 |
| .00492 | 57.2 | 1452.9 |
| .00502 | 56.0 | 1422.4 |
| .00512 | 54.9 | 1394.5 |
| .00522 | 53.8 | 1369.1 |
| .00536 | 55.5 | 1333.5 |
| .00544 | 51.7 | 1313.2 |
| .00554 | 50.8 | 1290.3 |
| .00566 | 49.7 | 1262.4 |
| .00580 | 48.5 | 1231.9 |
| .00592 | 47.5 | 1206.5 |
| .00606 | 46.4 | 1178.6 |
| .00622 | 45.2 | 1148.1 |
| .00636 | 44.2 | 1122.7 |
| .00654 | 43.0 | 1092.2 |
| .00668 | 42.1 | 1069.3 |
| .00686 | 41.0 | 1041.1 |
| .00694 | 40.5 | 1028.7 |
| .00720 | 39.1 | 993.1 |
| .00740 | 38.0 | 965.2 |
| .00760 | 37.0 | 939.8 |
| .00780 | 36.1 | 916.9 |
| .00802 | 35.1 | 891.5 |
| .00922 | 34.2 | 868.7 |
| .00850 | 33.1 | 840.7 |
| .00878 | 32.0 | 812.8 |
| .00906 | 31.0 | 787.4 |
| .00922 | 30.5 | 774.7 |
| .00938 | 30.0 | 762.0 |
| .00960 | 29.3 | 744.2 |
| .00980 | 28.7 | 728.9 |
| .01004 | 28.0 | 711.2 |
| .01022 | 27.5 | 698.5 |
| .01042 | 27.0 | 685.8 |
| .01060 | 26.5 | 673.1 |
| .01080 | 26.0 | 660.4 |
| .01110 | 25.3 | 642.6 |
| .01130 | 24.9 | 632.5 |
| .01170 | 24.0 | 609.6 |
| .01200 | 23.4 | 594.4 |
| .01240 | 22.7 | 576.6 |
| .01280 | 22.0 | 558.8 |
| .01310 | 21.5 | 546.1 |
| .01360 | 20.7 | 525.8 |
| .01400 | 20.1 | 510.5 |
| .01430 | 19.1 | 500.4 |
| .01460 | 19.0 | 482.6 |
| .01540 | 18.3 | 464.8 |
| .01570 | 17.9 | 454.7 |
| .01610 | 17.5 | 444.5 |
| .01650 | 17.1 | 434.3 |
| .01700 | 16.6 | 421.6 |
| .01750 | 16.1 | 408.9 |
| .01800 | 15.6 | 396.2 |
| .01860 | 15.1 | 383.5 |
| .01910 | 14.7 | 373.4 |
| .01980 | 14.2 | 360.7 |
| .02040 | 13.8 | 350.5 |
| .02100 | 13.4 | 340.4 |
| .02160 | 13.0 | 330.2 |

TABLE I.—CONVERSION TABLE FROM SPHEROMETER DIAL READING TO RADIUS OF CURVATURE—Continued

| Dial reading | Radius of curvature (inches) | Radius of curvature (mm) |
|---|---|---|
| .02250 | 12.5 | 317.5 |
| .02340 | 12.0 | 304.8 |
| .02450 | 11.5 | 292.1 |
| .02560 | 11.2 | 279.4 |
| .02680 | 10.5 | 266.7 |
| .02810 | 10.0 | 254.0 |
| .02960 | 9.5 | 241.3 |
| .03130 | 9.0 | 228.6 |
| .03310 | 8.5 | 215.9 |

9. In § 571.111, Figure 2 ''Location of Test Cylinders for School Bus Field-of-View Test'', after S13.3(g), would be revised to read as follows:

BILLING CODE 4910–59–P

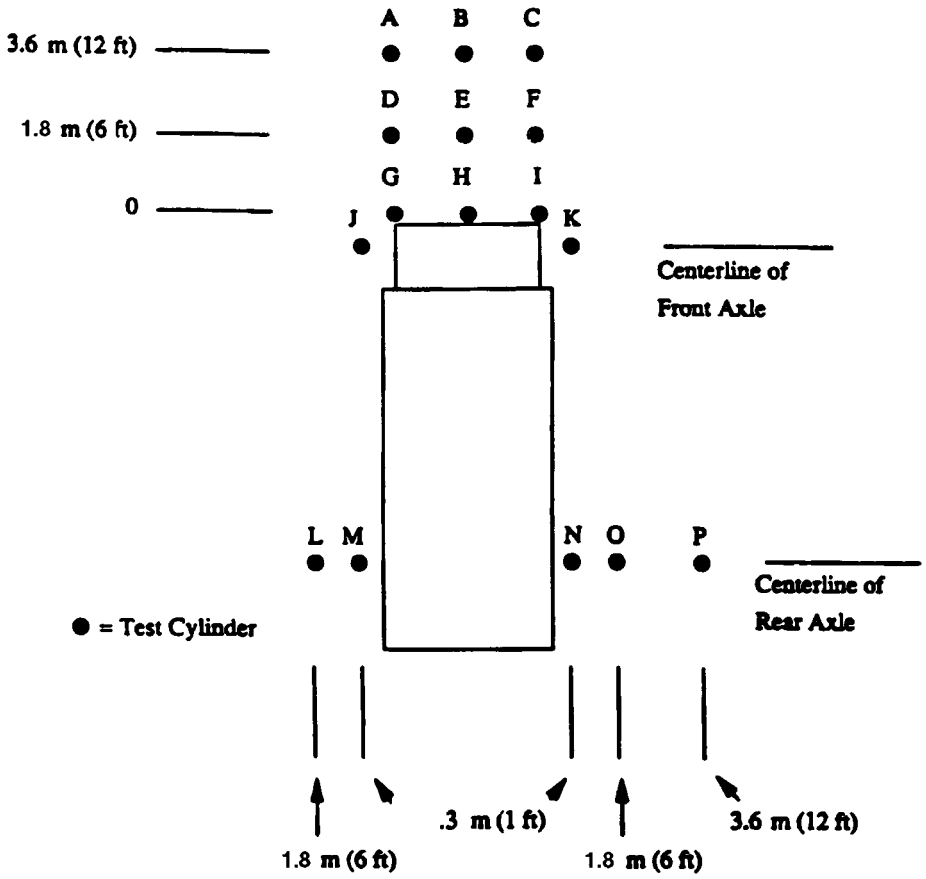


**Figure 2.—Location of Test Cylinders for School Bus Field-of-View Test**
**All Dimensions in Meters (m)**

BILLING CODE 4910–59–C

10. Section 571.116 would be amended by revising S5.1.3; revising S5.2.1; revising in S5.2.2.2, the introductory paragraph and paragraph (g)(4); revising in S5.2.2.3, the introductory paragraph, paragraph (d) and paragraph (e)(4); revising S6.3; revising in S6.6.6, paragraph (a); revising S6.8.3; revising in S6.10.3, paragraph (a); revising S6.11.1; revising S6.11.6; revising, in S6.13.2, paragraph (b); revising in S6.13.3, paragraph (b), revising in S6.13.4, paragraph (c)(1); revising S7.4.2; and revising in S7.5.1, paragraph (b), to read as follows:

**§ 571.110 Standard No. 116; Motor vehicle brake fluids.**

* * * * *

S5.1.3. *Kinematic viscosities.* When brake fluid is tested according to S6.3, the kinematic viscosities in square millimeters per second at stated temperatures shall be neither less than 1.5 $mm^2/s$ at 100° C. (212° F.) nor more than the following maximum value for the grade indicated:

(a) DOT 3: 1,500 $mm^2/s$ at minus 40° C. (minus 40° F.).

(b) DOT 4: 1,800 $mm^2/s$ at minus 40° C. (minus 40° F.).

(c) DOT 5: 900 $mm^2/s$ at minus 40° C. (minus 40° F.).

* * * * *

S5.2.1 *Container sealing.* Each brake fluid or hydraulic system mineral oil container with a capacity of 177 mL or more shall be provided with a resealable closure that has an inner seal impervious to the packaged brake fluid. The container closure shall include a tamper-proof feature that will either be destroyed or substantially altered when the container closure is initially opened.

* * * * *

S5.2.2.2 Each packager of brake fluid shall furnish the information specified in paragraphs (a) through (g) of this S5.2.2.2 by clearly marking it on each brake fluid container or on a label (labels) permanently affixed to the container, in any location except a removable part such as a lid. After being subjected to the operations and conditions specified in S6.14, the information required by this section shall be legible to an observer having corrected visual acuity of 20/40 (Snellen ratio) at a distance of 305 mm, and any label affixed to the container in compliance with this section shall not be removable without it being destroyed or defaced.

* * * * *

(g) * * *

(4) *CAUTION:* DO NOT REFILL CONTAINER, AND DO NOT USE FOR OTHER LIQUIDS. (Not required for containers with a capacity in excess of 19 L.)

S5.2.2.3 Each packager of hydraulic system mineral oil shall furnish the information specified in paragraphs (a) through (e) of this S5.2.2.3 by clearly marking it on each brake fluid container or on a label (labels) permanently affixed to the container, in any location except a removable part such as a lid. After being subjected to the operations and conditions specified in S6.14, the information required by this section shall be legible to an observer having corrected visual acuity of 20/40 (Snellen ratio) at a distance of 305 mm and any label affixed to the container in compliance with this section shall not be removable without it being destroyed or defaced.

* * * * *

(d) Designation of the contents as ''HYDRAULIC SYSTEM MINERAL OIL'' in capital letters at least 3 mm high.

(e) * * *

* * * * *

(4) *CAUTION:* STORE HYDRAULIC SYSTEM MINERAL OIL ONLY IN ITS ORIGINAL CONTAINER. KEEP CONTAINER CLEAN AND TIGHTLY CLOSED. DO NOT REFILL CONTAINER OR USE OTHER LIQUIDS. (The last sentence is not required for containers with a capacity in excess of 19 L.)

* * * * *

S6.3 *Kinematic viscosity.* Determine the kinematic viscosity of a brake fluid in $mm^2/s$ by the following procedure. Run duplicate samples at each of the specified temperatures, making two timed runs on each sample.

* * * * *

S6.6.6 Calculation. (a) Measure the area of each type of test strip to the nearest square centimeter. Divide the average change in mass for each type by the area of that type.

* * * * *

S6.8.3 *Procedure.* Obtain the tare weight of each of the four covered petri dishes to the nearest 0.01 gram. Place 25±1 ml. of brake fluid in each dish, replace proper covers and reweigh. Determine the weight of each brake fluid test specimen by the difference. Place the four dishes, each inside its inverted cover, in the oven at 100°±2° C. (212°±3.6° F.) for 46±2 hours. (Note: Do not simultaneously heat more than one fluid in the same oven.) Remove the dishes from the oven, allow to cool to 23°±5° C. (73.4°±9° F.), and weigh. Return to the oven for an additional 24±2 hours. If at the end of 72±4 hours the average loss by evaporation is less than 60 percent, discontinue the evaporation procedure and proceed with examination of the residue. Otherwise, continue this procedure either until equilibrium is reached as evidenced by an incremental mass loss of less than 0.25 gram in 24 hours on all individual dishes or for a maximum of 7 days. During the heating and weighing operation, if it is necessary to remove the dishes from the oven for a period of longer than 1 hour, the dishes shall be stored in a desiccator as soon as cooled to room temperature. Calculate the percentage of fluid evaporated from each dish. Examine the residue in the dishes at the end of 1 hour at 23°±5° C. (73.4°±9° F.). Rub any sediment with the fingertip to determine grittiness or abrasiveness. Combine the residues from all four dishes in a 118 mL (4-ounce) oil-sample bottle and store vertically in a cold chamber at minus 5°±1° C. (23°±5° F.) for 60±10 minutes. Quickly remove the bottle and place in the horizontal position. The residue must flow at least 5 mm (0.2 inch) along the tube within 5 seconds.

* * * * *

S6.10.3 *Procedure*—(a) *At low temperature.* Mix 50±0.5 mL of brake fluid with 50±0.5 mL of SAE RM–66–03 Compatibility Fluid. Pour this mixture into a centrifuge tube and stopper with a clean dry cork. Place tube in the cold chamber maintained at minus 40°±2° C. (minus 40°±3.6° F). After 24±2 hours, remove tube, quickly wipe with a clean lint-free cloth saturated with ethanol (isopropanol when testing DOT 5 fluids) or acetone. Examine the test specimen for evidence of slugging, sedimentation, or crystallization. Test fluids, except DOT 5 SBBF, shall be examined for stratification.

* * * * *

S6.11.1 *Summary of procedure.* Brake fluids, except DOT 5 SBBF, are activated with a mixture of approximately 0.2 percent benzoyl peroxide and 5 percent water. DOT 5 SBBF is humidified in accordance with S6.2 eliminating determination of the ERBP, and then approximately 0.2 percent benzoyl peroxide is added. A corrosion test strip assembly consisting of cast iron and an aluminum strip separated by tinfoil squares at each end is then rested on a piece of SBR WC cup positioned so that the test strip is half immersed in the fluid and oven aged at 70° C. (158° F.) for 168 hours. At the end of this period, the metal strips are examined for pitting, etching, and loss of mass.

* * * * *

S6.11.6 *Calculation.* Determine corrosion loss by dividing the change in mass of each metal strip by the total surface area of each strip measured in square millimeters ($mm^2$), to the nearest

square millimeter ($mm^2$). Average the results for the two strips of each type of metal, rounding to the nearest 0.05 mg. per 100 square millimeter ($mm^2$). If only one of the duplicates fails for any reason, run a second set of duplicate samples. Both repeat samples shall meet all requirements of S5.1.11.

* * * * *

S6.13.2 *Apparatus and equipment.*

* * * * *

(b) *Braking pressure actuation mechanism.* An actuating mechanism for applying a force to the master cylinder pushrod without side thrust. The amount of force applied by the actuating mechanism shall be adjustable and capable of applying sufficient thrust to the master cylinder to create a pressure of at least 6895 kPa (1,000 p.s.i.) in the simulated brake system. A hydraulic gage or pressure recorder, having a range of at least 0 to 6895 kPa (0 to 1,000 p.s.i), shall be installed between the master cylinder and the brake assemblies and shall be provided with a shutoff valve and with a bleeding valve for removing air from the connecting tubing. The actuating mechanism shall be designed to permit adjustable stroking rates of approximately 1,000 strokes per hour. Use a mechanical or electrical counter to record the total number of strokes.

* * * * *

S6.13.3 *Materials.*

* * * * *

(b) *Steel tubing.* Double wall steel tubing meeting SAE specification J527. A complete replacement of tubing is essential when visual inspection indicates any corrosion or deposits on inner surface of tubing. Tubing from master cylinder to one wheel cylinder shall be replaced for each test (minimum length .9 m.) Uniformity in tubing size is required between master cylinder and wheel cylinder. The standard master cylinder has two outlets for tubing, both of which must be used.

* * * * *

S6.13.4 *Preparation of test apparatus.*

* * * * *

(c) *Assembly and adjustment of test apparatus.* (1) When using a shoe and drum type apparatus, adjust the brake shoe toe clearances to 1.0±0.1 mm (0.040±0.004 inch). Fill the system with brake fluid, bleeding all wheel cylinders and the pressure gage to remove entrapped air. Operate the actuator manually to apply a pressure greater than the required operating pressure and inspect the system for leaks. Adjust the actuator and/or pressure relief valve to obtain a pressure of 6895 kPa±3.5 kPa (1,000±50 p.s.i.). A smooth pressure stroke pattern is required when using a shoe and drum type apparatus. The pressure is relatively low during the first part of the stroke and then builds up smoothly to the maximum stroking pressure at the end of the stroke, to permit the primary cup to pass the compensating hole at a relatively low pressure. Using stroking fixtures, adjust the actuator and/or pressure relief valve to obtain a pressure of 6895 kPa±345 kPa (1,000±50 p.s.i.).

* * * * *

S7.4.2 *Procedure.* Make hardness measurements at 23°±5° C. (73.4°±3.6°F.). Equilibrate the tester and anvils at this temperature prior to use. Center brake cups lip side down on an anvil of appropriate hardness. Following the manufacturer's operating instructions for the hardness tester, make one measurement at each of four points 6 mm from the center of the cup and spaced 90° apart. Average the four values, and round off to the nearest IRHD.

* * * * *

S7.5.1 *Apparatus.*

* * * * *

(b) *Centrifuge.* A centrifuge capable of whirling two or more filled centrifuge tubes at a speed which can be controlled to give a relative centrifugal force (r.c.f.) between 600 and 700 at the tip of the tubes. The revolving head, trunnion rings, and trunnion cups, including the rubber cushion, shall withstand the maximum centrifugal force capable of being delivered by the power source. The trunnion cups and cushions shall firmly support the tubes when the centrifuge is in motion. Calculate the speed of the rotating head using this equation:

$$r.p.m. = 265[\sqrt{25.4 \times r.c.f./d}]$$

Where: r.c.f. = Relative centrifugal force, and d = Diameter of swing, in millimeters, measured between tips of opposing tubes when in rotating position.

Table VI shows the relationship between diameter, swing, relative centrifugal force (r.c.f.), and revolutions per minute.

TABLE VI.—ROTATION SPEEDS FOR CENTRIFUGES OF VARIOUS DIAMETERS

| Diameter of swing in millimeters [a] | r.p.m. at 600 r.c.f | r.p.m. at 700 r.c.f. |
|---|---|---|
| 483 | 1490 | 1610 |
| 508 | 1450 | 1570 |
| 533 | 1420 | 1530 |
| 559 | 1390 | 1500 |

[a] Measured in millimeters between tips of opposite tubes when in rotating position.

* * * * *

11. Section 571.117 would be amended by revising in S6.3.1, the introductory text, and revising in S6.3.2, the introductory text, to read as follows:

**§ 571.117 Standard No. 117; Retreaded pneumatic tires.**

* * * * *

S6.3 *Labeling.*

S6.3.1 Each retreaded pneumatic tire manufactured on or after June 1, 1973, shall be labeled, in at least one location on the tire sidewall in letters and numerals not less than 2 mm (0.078 inch) high, with the following information:

* * * * *

S6.3.2 Each retreaded tire manufactured on or after May 12, 1975, shall bear permanent labeling (through molding, branding, or other method that will produce a permanent label, or through the retention of the original casing labeling) in at least one location on the tire sidewall, in letters and numbers not less than 2 mm (0.078 inch) high, consisting of the following information:

* * * * *

12. In § 571.117, Table I—''Plies'' after paragraph (c) of S6.3.2 would be revised to read as follows:

TABLE I.—PLIES

| Tire size | 2 ply–4 ply (4 ply rating) | | | | 4 ply (6 ply rating) | | | | 4 ply (8 ply rating) | | | |
|---|---|---|---|---|---|---|---|---|---|---|---|---|
| | Maximum load | | Maximum inflation pressure | | Maximum load | | Maximum Inflation pressure | | Maximum load | | Maximum inflation pressure | |
| | lb | kg | psi | kPa | lb | kg | psi | kPa | lb | kg | psi | kPa |
| 6.00–13 | 1010 | 458 | 32 | 220 | 1080 | 499 | 36 | 248 | 1140 | 517 | 40 | 276 |
| 6.50–13 | 1150 | 552 | 32 | 220 | 1230 | 558 | 36 | 248 | 1300 | 590 | 40 | 276 |
| 7.00–13 | 1270 | 576 | 32 | 220 | 1360 | 617 | 36 | 248 | 1440 | 653 | 40 | 276 |
| 6.45–14 | 1120 | 508 | 32 | 220 | 1200 | 544 | 36 | 248 | 1270 | 576 | 40 | 276 |
| 6.95–14 | 1230 | 558 | 32 | 220 | 1310 | 594 | 36 | 248 | 1390 | 630 | 40 | 276 |
| 7.35–14 | 1360 | 617 | 32 | 220 | 1450 | 658 | 36 | 248 | 1540 | 698 | 40 | 276 |
| 7.75–14 | 1500 | 680 | 32 | 220 | 1600 | 726 | 36 | 248 | 1690 | 767 | 40 | 276 |
| 8.25–14 | 1620 | 735 | 32 | 220 | 1730 | 785 | 36 | 248 | 1830 | 830 | 40 | 276 |
| 8.55–14 | 1770 | 803 | 32 | 220 | 1890 | 857 | 36 | 248 | 2000 | 907 | 40 | 276 |
| 8.85–14 | 1860 | 844 | 32 | 220 | 1990 | 903 | 36 | 248 | 2100 | 953 | 40 | 276 |
| 5.60–15 | 0970 | 440 | 32 | 220 | 1040 | 472 | 36 | 248 | 1105 | 501 | 40 | 276 |
| 5.90–15 | 1050 | 476 | 32 | 220 | 1130 | 513 | 36 | 248 | 1200 | 544 | 40 | 276 |
| 6.85–15 | 1230 | 558 | 32 | 220 | 1320 | 599 | 36 | 248 | 1390 | 630 | 40 | 276 |
| 7.35–15 | 1390 | 630 | 32 | 220 | 1480 | 671 | 36 | 248 | 1570 | 712 | 40 | 276 |
| 7.75–15 | 1490 | 676 | 32 | 220 | 1590 | 721 | 36 | 248 | 1690 | 767 | 40 | 276 |
| 8.15–15 | 1610 | 730 | 32 | 220 | 1720 | 780 | 36 | 248 | 1820 | 826 | 40 | 276 |
| 8.25–15 | 1620 | 735 | 32 | 220 | 1730 | 785 | 36 | 248 | 1830 | 830 | 40 | 276 |
| 8.45–15 | 1740 | 789 | 32 | 220 | 1860 | 844 | 36 | 248 | 1970 | 894 | 40 | 276 |
| 8.55–15 | 1770 | 803 | 32 | 220 | 1890 | 857 | 36 | 248 | 2000 | 907 | 40 | 276 |
| 8.85–15 | 1860 | 844 | 32 | 220 | 1980 | 898 | 36 | 248 | 2100 | 953 | 40 | 276 |
| 9.00–15 | 1900 | 862 | 32 | 220 | 2030 | 721 | 36 | 248 | 2150 | 975 | 40 | 276 |
| 9.15–15 | 1970 | 894 | 32 | 220 | 2100 | 953 | 36 | 248 | 2230 | 1012 | 40 | 276 |
| 8.90–15 | 2210 | 1002 | 32 | 220 | 2360 | 1070 | 36 | 248 | 2500 | 1134 | 40 | 276 |
| A70–13 | 1060 | 481 | 32 | 220 | 1130 | 513 | 36 | 248 | 1200 | 544 | 40 | 276 |
| D70–13 | 1320 | 599 | 32 | 220 | 1410 | 640 | 36 | 248 | 1490 | 676 | 40 | 276 |
| D70–14 | 1320 | 599 | 32 | 220 | 1410 | 640 | 36 | 248 | 1490 | 676 | 40 | 276 |
| E70–14 | 1400 | 635 | 32 | 220 | 1490 | 676 | 36 | 248 | 1580 | 717 | 40 | 276 |
| F70–14 | 1500 | 680 | 32 | 220 | 1610 | 730 | 36 | 248 | 1700 | 771 | 40 | 276 |
| G70–14 | 1620 | 735 | 32 | 220 | 1730 | 785 | 36 | 248 | 1830 | 830 | 40 | 276 |
| H70–14 | 177 | 803 | 32 | 220 | 1890 | 857 | 36 | 248 | 2010 | 912 | 40 | 276 |
| J70–14 | 1860 | 844 | 32 | 220 | 1980 | 898 | 36 | 248 | 2100 | 953 | 40 | 276 |
| L70–14 | 1970 | 894 | 32 | 220 | 2180 | 989 | 36 | 248 | 2230 | 1012 | 40 | 276 |
| C70–15 | 1230 | 558 | 32 | 220 | 1320 | 599 | 36 | 248 | 1390 | 630 | 40 | 276 |
| D70–15 | 1320 | 599 | 32 | 220 | 1410 | 640 | 36 | 248 | 1490 | 676 | 40 | 276 |
| E70–15 | 1400 | 635 | 32 | 220 | 1490 | 676 | 36 | 248 | 1580 | 717 | 40 | 276 |
| F70–15 | 1500 | 680 | 32 | 220 | 1610 | 730 | 36 | 248 | 1700 | 771 | 40 | 276 |
| G70–15 | 1620 | 735 | 32 | 220 | 1730 | 785 | 36 | 248 | 1830 | 830 | 40 | 276 |
| H70–15 | 1770 | 803 | 32 | 220 | 1890 | 857 | 36 | 248 | 2010 | 912 | 40 | 276 |
| J70–15 | 1860 | 844 | 32 | 220 | 1980 | 898 | 36 | 248 | 2100 | 953 | 40 | 276 |
| K70–15 | 1900 | 862 | 32 | 220 | 2030 | 721 | 36 | 248 | 2150 | 975 | 40 | 276 |
| L70–15 | 1970 | 894 | 32 | 220 | 2100 | 953 | 36 | 248 | 2230 | 1012 | 40 | 276 |
| 165–13 | 1050 | 476 | 32 | 220 | 1130 | 513 | 36 | 248 | 1200 | 544 | 40 | 276 |
| 175–13 | 1150 | 552 | 32 | 220 | 1240 | 562 | 36 | 248 | 1350 | 612 | 40 | 276 |
| 185–13 | 1270 | 576 | 32 | 220 | 1390 | 630 | 36 | 248 | 1510 | 685 | 40 | 276 |
| 155R13 | 950 | 431 | 32 | 220 | 1015 | 460 | 36 | 248 | 1075 | 488 | 40 | 276 |
| 155R14 | 1010 | 458 | 32 | 220 | 1080 | 499 | 36 | 248 | 1140 | 517 | 40 | 276 |
| 155R14 | 1015 | 460 | 32 | 220 | 1085 | 492 | 36 | 248 | 1150 | 552 | 40 | 276 |
| 165R13 | 1010 | 458 | 32 | 220 | 1080 | 499 | 36 | 248 | 1140 | 517 | 40 | 276 |
| 165R14 | 1120 | 508 | 32 | 220 | 1200 | 544 | 36 | 248 | 1370 | 621 | 40 | 276 |
| 165R15 | 1130 | 513 | 32 | 220 | 1200 | 544 | 36 | 248 | 1270 | 576 | 40 | 276 |
| 175R14 | 1230 | 558 | 32 | 220 | 1310 | 594 | 36 | 248 | 1390 | 630 | 40 | 276 |
| 185R14 | 1360 | 617 | 32 | 220 | 1450 | 658 | 36 | 248 | 1540 | 698 | 40 | 2761 |
| 185/70R13 | 1090 | 494 | 32 | 220 | 1140 | 517 | 36 | 248 | 1190 | 540 | 40 | 276 |
| 145–14 [1] | 865 | 392 | 32 | 220 | 905 | 411 | 36 | 248 | 935 | 424 | 40 | 276 |
| 145–15 | 895 | 406 | 32 | 220 | 940 | 426 | 36 | 248 | 975 | 442 | 40 | 276 |
| 195–15 | 1550 | 703 | 32 | 220 | 1680 | 762 | 36 | 248 | 1820 | 826 | 40 | 276 |
| 205–15 | 1770 | 803 | 32 | 220 | 1840 | 835 | 36 | 248 | 2000 | 907 | 40 | 276 |

[1] Dash Radial—Not an ''R'' Radial.

13. Section 571.119 would be amended by revising S6.3; revising S6.4; revising in S6.5, the introductory paragraph and paragraphs (d) and (e); revising S7.1.2; revising in S7.2, paragraph (c); revising in S7.3, paragraphs (c), (e), and (f); and revising in S7.4, paragraph (c) to read as follows:

**§ 571.119 Standard No. 119; New pneumatic tires for vehicles other than passenger cars.**

* * * * *

S6.3 *High speed performance.* When tested in accordance with the

procedures of S7.3, a tire shall meet the requirements set forth in S6.1.1 and S6.1.2 (a) and (b). However, this requirement applies only to motorcycle tires and to non-speed-restricted tires of 368 mm (14.5 inches) nominal rim diameter or less marked load range A, B, C, or D.

S6.4 *Treadwear indicators*. Except as specified in this paragraph, each tire shall have at least six treadwear indicators spaced approximately equally around the circumference of the tire that enable a person inspecting the tire to determine visually whether the tire has worn to a tread depth of 2 mm (one-sixteenth of an inch). Tires with 305 mm (12-inch) or smaller rim diameter shall have at least three such treadwear indicators. Motorcycle tires shall have at least three such indicators which permit visual determination that the tire has worn to a tread depth of 1 mm (one-thirty-second of an inch).

S6.5 *Tire markings*. Except as specified in this paragraph, each tire shall be marked on each sidewall with the information specified in paragraphs (a) through (j) of this section. The markings shall be placed between the maximum section width (exclusive of sidewall decorations or curb ribs) and the bead on at least one sidewall, unless the maximum section width of the tire is located in an area which is not more than one-fourth of the distance from the bead to the shoulder of the tire. If the maximum section width falls within that area, the markings shall appear between the bead and a point one-half the distance from the bead to the shoulder of the tire, on at least one sidewall. The markings shall be in letters and numerals not less than 2 mm (0.078 inch) high and raised above or sunk below the tire surface not less that 0.4 mm (0.015 inch), except that the marking depth shall be not less than 0.25 mm (0.010 inch) in the case of motorcycle tires. The tire identification and the DOT symbol labeling shall comply with part 574 of this chapter. Markings may appear on only one sidewall and the entire sidewall area may be used in the case of motorcycle tires and recreational, boat, baggage, and special trailer tires.

* * * * *

(d) The maximum load rating and corresponding inflation pressure of the tire, shown as follows:

(Mark on tires rated for single and dual load):
Max load single _____ kg (_____ lbs) at _____kPa (_____ psi) cold.
Max load dual _____kg (_____ lbs) at _____kPa (_____ psi) cold.

(Mark on tires rated only for single load):
Max load _____kg (_____ lbs) at _____kPa (_____ psi) cold.

(e) The speed restriction of the tire, if 88 km/h (55 mph) or less, shown as follows:

Max speed _____km/h (_____ mph).

* * * * *

S7.1.2 The tire must be capable of meeting the requirements of S7.2 and S7.4 when conditioned to a temperature of 35 °C (95 °F) for 3 hours before the test is conducted, and with an ambient temperature maintained at 35 °C (95 °F) during all phases of testing. The tire must be capable of meeting the requirements of S7.3 when conditioned at a temperature of 21 °C (70 °F) for 3 hours before the test is conducted.

S7.2 *Endurance*.

* * * * *

(c) Mount the tire-rim assembly on an axle and press it against a flat-faced steel test wheel that is 1708 mm (67.23 inches) in diameter and at least as wide as the tread of the tire.

* * * * *

S7.3 *Strength*.

* * * * *

(c) Force a cylindrical steel plunger, with a hemispherical end and of the diameter specified in Table I for the tire size, perpendicularly into a raised tread element as near as possible to the centerline of the tread, at a rate of 51 mm (2 inches) per minute, until the tire breaks or the plunger is stopped by the rim.

* * * * *

(e) Repeat the plunger application at 72° intervals around the circumference of the tire, until five measurements are made. However, in the case of tires of 305 mm (12-inch) rim diameter or less, repeat the plunger application at 120° intervals around the circumference of the tire, until three measurements are made.

(f) Compute the breaking energy for each test point by one of the two following formulas:

(1) $W=(FP/2)\times 10^{3}$ (Joules) (J)

Where:

W=Breaking energy (in kiloJoules) (kJ)
F=Force in newtons (N) and
P=Penetration in millimeters (mm), or;

(2) W=(FP/2)

Where:

W=Breaking energy in inch-pounds,
F=Force in pounds,
P=Penetration in inches.

* * * * *

S7.4 *High speed performance*.

* * * * *

(c) Remove the load, allow the tire to cool to 35 °C (95 °F), and then adjust the pressure to that marked on the tire for single tire use.

* * * * *

14. In § 571.119, Table I—''Strength Test Plunger Diameter'', Table II—''Minimum Static Breaking Energy (Inch-Pounds)'', and Table III—''Endurance Test Schedule'' that follow paragraph (e) of S7.4 would be revised to read as follows:

TABLE I.—STRENGTH TEST PLUNGER DIAMETER

| | Plunger diameter | |
|---|---|---|
| | (mm) | (inches) |
| Tire type: | | |
| Light truck | 19 | ¾ |
| Motorcycle | 8 | 5/16 |
| Tires for 305 mm (12-inch) or smaller rims except motorcycle | 19 | ¾ |
| Tires other than the above types: | | |
| Tubeless: | | |
| 445 mm (17.5 inches) or smaller rims | 19 | ¾ |
| Larger than 445 mm (17.5 inches) rims: | | |
| Load range F or less | 32 | 1¼ |
| Load range over F | 38 | 1½ |
| Tube type: | | |
| Load range F or less | 32 | 1¼ |
| Load range over F | 38 | 1½ |

TABLE II.—MINIMUM STATIC BREAKING ENERGY (JOULES (J)* AND INCH-POUNDS (INCH-LBS))

| Load Range | | | All 305 mm (12 inch) or smaller rim size | | Light truck 445 mm (17.5 inch) or smaller rim tubeless | | Tube type | | Tubeless | | Tube type | | Tubeless | |
|---|---|---|---|---|---|---|---|---|---|---|---|---|---|---|
| Tire Characteristic | Motorcycle | | 19mm ¾″ | | 19mm ¾″ | | 32mm 1¼″ | | | | 38mm 1½″ | | | |
| Plunger Diameter (mm and inches) | 8mm 5/16″ | | | | | | | | | | | | | |
| | J | inch-lbs | J | inch-lbs | J | inch-lbs | J | inch-lbs | J | inch-lbs | J | inch-lbs | J | inch-lbs |
| A | 16 | 150 | 67 | 600 | 225 | 2,000 | ..... | ..... | ..... | ..... | ..... | ..... | ..... | ..... |
| B | 33 | 300 | 135 | 1,200 | 293 | 2,600 | ..... | ..... | ..... | ..... | ..... | ..... | ..... | ..... |
| C | 45 | 400 | 203 | 1,800 | 361 | 3,200 | 768 | 6,800 | 576 | 5,100 | ..... | ..... | ..... | ..... |
| D | ..... | ..... | 271 | 2,400 | 514 | 4,550 | 892 | 7,900 | 734 | 6,500 | ..... | ..... | ..... | ..... |
| E | ..... | ..... | 338 | 3,000 | 576 | 5,100 | 1,412 | 12,500 | 971 | 8,600 | ..... | ..... | ..... | ..... |
| F | ..... | ..... | 406 | 3,600 | 644 | 5,700 | 1,785 | 15,800 | 1,412 | 12,500 | ..... | ..... | ..... | ..... |
| G | ..... | ..... | ..... | ..... | 711 | 6,300 | ..... | ..... | ..... | ..... | 2,282 | 20,200 | 1,694 | 15,000 |
| H | ..... | ..... | ..... | ..... | 768 | 6,800 | ..... | ..... | ..... | ..... | 2,598 | 23,000 | 2,090 | 18,500 |
| J | ..... | ..... | ..... | ..... | ..... | ..... | ..... | ..... | ..... | ..... | 2,824 | 25,000 | 2,203 | 19,500 |
| L | ..... | ..... | ..... | ..... | ..... | ..... | ..... | ..... | ..... | ..... | 3,050 | 27,000 | ..... | ..... |
| M | ..... | ..... | ..... | ..... | ..... | ..... | ..... | ..... | ..... | ..... | 3,220 | 28,500 | ..... | ..... |
| N | ..... | ..... | ..... | ..... | ..... | ..... | ..... | ..... | ..... | ..... | 3,389 | 30,000 | ..... | ..... |

**Note:** for rayon cord tires, applicable energy values are 60 percent of those in table.
*kJ measurements are rounded down to the nearest whole number.

TABLE III.—ENDURANCE TEST SCHEDULE

| Description | Load range | Test wheel speed (r/m) | Test load: Percent of maximum load rating | | | Total best revolutions (thousands) |
|---|---|---|---|---|---|---|
| | | | I–7 hours | II–16 hours | III–24 hours | |
| Speed restricted service: | | | | | | |
| 88 km/h (55 mph) | ..... | ..... | ..... | ..... | ..... | ..... |
| 80 km/h (50 mph) | All | 125 | 66 | 84 | 101 | 352.0 |
| | C,D | 150 | 75 | 97 | 114 | 432.0 |
| 56 km/h (35 mph) | E, F, G, H, J, L | 100 | 66 | 84 | 101 | 282.5 |
| Motorcycle | All | 75 | 66 | 84 | 101 | 211.0 |
| All other | All | 250 | [1] 100 | [2] 108 | 117 | 510.0 |
| | A,B,C,D | 250 | [1] 75 | [2] 97 | 114 | ..... |
| | E | 200 | 70 | 88 | 106 | 546.0 |
| | F | 200 | 66 | 84 | 101 | 564.0 |
| | G | 175 | 66 | 84 | 101 | 493.5 |
| | H,J,L,N | 150 | 66 | 84 | 101 | 423.5 |

[1] 4 hr., for tire sizes subject to high speed requirements (S6.3).
[2] 6 hr., for tire sizes subject to high speed requirements (S6.3).

15. Section 571.123 would be amended by revising S5.2.3 to read as follows:

**§ 571.123 Standard No. 123, Motorcycle controls and displays.**

* * * * *

S5.2.3 *Control and display identification*. If an item of equipment in Table 3, Column 1, is provided, the item and its operational function shall be identified by:

(a) A symbol substantially in the form shown in Column 3; or

(b) Wording shown in both Column 2 and Column 4; or

(c) A symbol substantially in the form shown in Column 3 and wording shown in both Column 2 and Column 4.

(d) The abbreviations ''M.P.H.'', ''km/h'', ''r/min'', ''Hi'', ''Lo'', ''L'', ''R'', and ''Res'' appearing in Column 2 and Column 4 may be spelled in full. Symbols and words may be provided for equipment items where none are shown in Column 2, Column 3, and Column 4. Any identification provided shall be placed on or adjacent to the control or display position, and shall appear upright to the operator.

* * * * *

16. In § 571.123, Table 3 ''Motorcycle Control and Display Identification Requirements'' that follows S5.2.5 and Tables 1 and 2 would be revised to read as follows:

BILLING CODE 4910–59–P

**Table 3**

**Motorcycle Control and Display Identification Requirements**

| No. | Column 1 | Column 2 | Column 3 | Column 4 |
|---|---|---|---|---|
| | Equipment | Control and Display Identification Word | Control and Display Identification Symbol | Identification at Appropriate Position of Control or Display |
| 1 | Ignition | Ignition | | Off |
| 2 | Supplemental Engine Stop (Off, Run) | Engine Stop | | Off, Run |
| 3 | Manual Choke or Mixture Enrichment | Choke or Enrichener | | |
| 4 | Electric Starter | | | Start[1] |
| 5 | Headlamp Upper-Lower Beam Control | Lights | [2] [2] | Hi, Lo |
| 6 | Horn | Horn | | |
| 7 | Turn Signal | Turn | [2] [3] | L, R |
| 8 | Speedometer | km/h m/h | | km/h m/h |
| 9 | Neutral Indicator | Neutral | N | |
| 10 | Upper Beam Indicator | High Beam | [2] | |
| 11 | Tachometer | R.P.M. or r/min. | | |
| 12 | Fuel Tank Shutoff Valve (Off, On, Res.) | Fuel | [2] [2] | Off, On, Res. |

[1] Required only if electric starter is separate from ignition switch.
[2] Framed areas may be filled.
[3] The pair of arrows is a single symbol. When the indicators for left and right turn operate independently however, the two arrows will be considered separate symbols and may be spaced accordingly.
[4] M.P.H. increase in a clockwise direction. Major graduations and numerals appear at 10 mph intervals, minor graduations at the 5 mph intervals. (37 F.R. 17474—August 29, 1972. Effective: 9/1/74)

BILLING CODE 4910–59–C

17. Section 571.201 would be amended by revising S2; revising S3.1; revising S3.1.1; revising S3.1.2; revising in S3.2, the introductory sentence; revising in S3.2.2, paragraph (c); revising S3.3.1; revising S3.4.2; revising S3.5.1; and revising in S5, paragraph (b) to read as follows:

**§ 571.201 Standard No. 201, Occupant protection in interior impacts.**

S2. *Application.* This standard applies to passenger cars, and to multipurpose passenger vehicles, trucks and buses with a gross vehicle weight rating of 4,536 kilograms or less. * * * * *

S3.1 *Instrument panels.* Except as provided in S3.1.1, when that area of the instrument panel that is within the head impact area is impacted in accordance with S3.1.2 by a 7 kg, 165 mm diameter head form at—

(a) A relative velocity of 24 km/h for all vehicles except those specified in paragraph (b) of this section,

(b) A relative velocity of 19 km/h for vehicles that meet the occupant crash protection requirements of S5.1 of 49 CFR 571.208 by means of inflatable restraint systems and meet the requirements of S4.1.2.1(c)(2) of 49 CFR 571.208 by means of a Type 2 seat belt assembly at the right front designated seating position, the deceleration of the head form shall not exceed 784 m/s² continuously for more than 3 milliseconds.

S3.1.1 The requirements do not apply to:

(a) Console assemblies;

(b) Areas less than 127 mm inboard from the juncture of the instrument panel attachment to the body side inner structure;

(c) Areas closer to the windshield juncture than those statically contactable by the head form with the windshield in place;

(d) Areas outboard of any point of tangency on the instrument panel of a 165 mm diameter head form tangent to and inboard of a vertical longitudinal plane tangent to the inboard edge of the steering wheel; or

(e) Areas below any point at which a vertical line is tangent to the rearmost surface of the panel.

S3.1.2 *Demonstration procedures.* Tests shall be performed as described in Society of Automotive Engineers Recommended Practice J921, ''Instrument Panel Laboratory Impact Test Procedure,'' June 1965, using the specified instrumentation or instrumentation that meets the performance requirements specified in Society of Automotive Engineers Recommended Practice J977, ''Instrumentation for Laboratory Impact Tests,'' November 1966, except that:

(a) The origin of the line tangent to the instrument panel surface shall be a point on a transverse horizontal line through a point 127 mm horizontally forward of the seating reference point of the front outboard passenger designated seating position, displaced vertically an amount equal to the rise which results from 127 mm forward adjustment of the seat or 19 mm; and

(b) Direction of the impact shall be either:

(1) In a vertical plane parallel to the vehicle longitudinal axis; or

(2) In a plane normal to the surface at the point of contact.

S3.2 *Seat Backs.* Except as provided in S3.2.1, when that area of the seat back that is within the head impact area is impacted in accordance with S3.2.2 by a 7 kg, 165 mm diameter head form at a relative velocity of 24 km/h the deceleration of the head form shall not exceed 784 m/s² continuously for more than 3 milliseconds.

* * * * *

S3.2.2 *Demonstration procedures.*

* * * * *

(c) For seats without head restraints installed, tests shall be performed for each individual split or bucket seat back at points within 102 mm left and right of its centerline, and for each bench seat back between points 102 mm outboard of the centerline of each outboard designated seating position;

* * * * *

S3.3.1 *Demonstration procedures.* (a) Subject the interior compartment door latch system to an inertia load of 98 m/s² in a horizontal transverse direction and an inertia load of 98 m/s² in a vertical direction in accordance with the procedure described in section 5 of SAE Recommended Practice J839b, ''Passenger Car Side Door Latch Systems,'' May 1965, or an approved equivalent.

(b) Impact the vehicle perpendicularly into a fixed collision barrier at a forward longitudinal velocity of 48 km/h.

(c) Subject the interior compartment door latch system to a horizontal inertia load of 294 m/s² in a longitudinal direction in accordance with the procedure described in section 5 of SAE Recommended Practice J839b, ''Passenger Car Side Door Latch Systems,'' May 1965, or an approved equivalent.

* * * * *

S3.4.2 Each sun visor mounting shall present no rigid material edge radius of less than 3 mm that is statically contactable by a spherical 165 mm diameter head form.

S3.5 *Armrests.*

S3.5.1 *General.* Each installed arm rest shall conform to at least one of the following:

(a) It shall be constructed with energy-absorbing material and shall deflect or collapse laterally at least 51 mm without permitting contact with any underlying rigid material.

(b) It shall be constructed with energy-absorbing material that deflects or collapses to within 32 mm of a rigid test panel surface without permitting contact with any rigid material. Any rigid material between 13 mm and 32 mm from the panel surface shall have a minimum vertical height of not less than 25 mm.

(c) Along not less than 51 continuous mm of its length, the arm rest shall, when measured vertically in side elevation, provide at least 51 mm of coverage within the pelvic impact area.

* * * * *

S5. *Performance Criterion.*

* * * * *

(b) The free motion head form HIC is calculated in accordance with the following formula:

$$\left[\frac{1}{(t_2 - t_1)}\int_{t_1}^{t_2} a\,dt\right]^{2.5}(t_2 - t_1)$$

Where the term *a* is the resultant acceleration expressed as a multiple of 9.8 m/s² (acceleration of gravity), and $t_1$ and $t_2$ are any two points in time during the impact which are separated by not more than a 36 millisecond time interval.

* * * * *

18. Section 571.202 would be amended by revising S2; revising S4.2; revising S4.3; revising in S5.1, paragraph (c), and revising S5.2 to read as follows:

**§ 571.202 Standard No. 202; Head restraints.**

* * * * *

S2. *Application.* This standard applies to passenger cars, and to multipurpose passenger vehicles, trucks and buses with a GVWR of 4,536 kg or less.

* * * * *

S4. *Requirements.*

* * * * *

S4.2 Each truck, multipurpose passenger vehicle and bus with a GVWR of 4,536 kg or less, shall comply with S4.3.

S4.3 *Performance levels.* Except for school buses, a head restraint that conforms to either (a) or (b) shall be

provided at each outboard front designated seating position. For school buses, a head restraint that conforms to either (a) or (b) shall be provided for the driver's seating position.

(a) It shall, when tested in accordance with S5.1, during a forward acceleration of at least 78 m/s² on the seat supporting structure, limit rearward angular displacement of the head reference line to 45° from the torso reference line; or

(b) It shall, when adjusted to its fully extended design position, conform to each of the following—

(1) When measured parallel to torso line, the top of the head restraint shall not be less than 700 mm above the seating reference point;

(2) When measured either 64 mm below the top of the head restraint or 635 mm above the seating reference point, the lateral width of the head restraint shall be not less than—

(i) 254 mm for use with bench-type seats; and

(ii) 171 mm for use with individual seats.

(3) When tested in accordance with S5.2, the rearmost portion of the head form shall not be displaced to more than 102 mm perpendicularly rearward of the displaced extended torso reference line during the application of the load specified in S5.2(c); and

(4) When tested in accordance with S5.2, the head restraint shall withstand an increasing load until one of the following occurs:

(i) Failure of the seat or seat back; or

(ii) Application of a load of 890 N.

S5. *Demonstration procedures.*

S5.1 * * *

* * * * *

(c) During forward acceleration applied to the structure supporting the seat as described in this paragraph, measure the maximum rearward angular displacement between the dummy torso reference line and head reference line. When graphically depicted, the magnitude of the acceleration curve shall not be less than that of a half-sine wave having the amplitude of 78 m/s² and a duration of 80 milliseconds and not more than that of a half-sine wave curve having an amplitude of 94 m/s² and a duration of 96 milliseconds.

S5.2 Compliance with S4.3(b) shall be demonstrated in accordance with the following with the head restraint in its fully extended design position:

(a) Place a test device, having the back plan dimensions and torso line (centerline of the head room probe in full back position), of the three dimensional SAE J826 manikin, at the manufacturer's recommended design seated position.

(b) Establish the displaced torso reference line by applying a rearward moment of 373 Nm moment about the seating reference point to the seat back through the test device back pan located in (a).

(c) After removing the back pan, using a 165 mm diameter spherical head form or cylindrical head form having a 165 mm diameter in plan view and a 152 mm height in profile view, apply, perpendicular to the displaced torso reference line, a rearward initial load 64 mm below the top of the head restraint that will produce a 373 Nm moment about the seating reference point.

(d) Gradually increase this initial load to 890 N or until the seat or seat back fails, whichever occurs first.

19. Section 571.203 would be amended by revising S2; revising S4; and revising S5.1 to read as follows:

**§ 571.203 Standard No. 203; Impact protection for the driver from the steering control system.**

* * * * *

S2. *Application.* This standard applies to passenger cars and to multipurpose passenger vehicles, trucks and buses with a gross vehicle weight rating of 4,536 kg or less. However, it does not apply to vehicles that conform to the frontal barrier crash requirements (S5.1) of Standard No. 208 (49 CFR 571.208) by means of other than seat belt assemblies. It also does not apply to walk-in vans.

* * * * *

S4. *Requirements.* Each passenger car and each multipurpose passenger vehicle, truck and bus with a gross vehicle weight rating of 4,536 kg or less manufactured on or after September 1, 1981 shall meet the requirements of S5.1 and S5.2.

S5. *Impact protection requirements.*

S5.1 Except as provided in this paragraph, the steering control system of any vehicle to which this standard applies shall be impacted in accordance with S5.1(a). However, the steering control system of any such vehicle manufactured on or before August 31, 1996, may be impacted in accordance with S5.1(b).

(a) When the steering control system is impacted by a body block in accordance with SAE Recommended Practice J944 JUN80 *Steering Control System—Passenger Car—Laboratory Test Procedure,* at a relative velocity of 24 km/h, the impact force developed on the chest of the body block transmitted to the steering control system shall not exceed 11,120 N, except for intervals whose cumulative duration is not more than 3 milliseconds.

(b) When the steering control system is impacted in accordance with Society of Automotive Engineers Recommended Practice J944, ''Steering Wheel Assembly Laboratory Test Procedure,'' December 1965, or an approved equivalent, at a relative velocity of 24 km/h, the impact force developed on the chest of the body block transmitted to the steering control system shall not exceed 11,120 N, except for intervals whose cumulative duration is not more than 3 milliseconds.

* * * * *

20. Section 571.204 would be amended by revising S4.2 to read as follows:

**§ 571.204 Standard No. 204; Steering control rearward displacement.**

* * * * *

S4. *Requirements.*

* * * * *

S4.2 *Vehicles manufactured on or after September 1, 1991.* When a passenger car or a truck, bus or multipurpose passenger vehicle with a gross vehicle weight rating of 4,536 kg or less and an unloaded vehicle weight of 2,495 kg or less is tested under the conditions of S5 in a 48 km/h perpendicular impact into a fixed collision barrier, the upper end of the steering column and shaft in the vehicle shall not be displaced more than 127 mm in a horizontal rearward direction parallel to the longitudinal axis of the vehicle. The amount of displacement shall be measured relative to an undisturbed point on the vehicle and shall represent the maximum dynamic movement of the upper end of the steering column and shaft during the crash test.

* * * * *

21. Section 571.207 would be amended by revising S5.1.2 to read as follows:

**§ 571.207 Standard No. 207, Seating systems.**

* * * * *

S5.1.2 If the seat back and the seat bench are attached to the vehicle by different attachments, attach to each component a fixture capable of transmitting a force to that component. Apply forces, in newtons, equal to 20 times the mass of the seat back in kilograms multiplied by 9.8 m/s² horizontally through the center of gravity of the seat back, as shown in Figure 2 and apply forces, in newtons, equal to 20 times the mass of the seat bench in kilograms multiplied by 9.8 m/s² horizontally through the center of gravity of the seat bench, as shown in Figure 3.

* * * * *

**§ 571.209 [Amended]**

22. Section 571.209 would be amended by revising in S4.1, paragraphs (f) and (g)(3); revising in S4.2, paragraphs (a), (b) and (c); revising in S4.3, paragraphs (c), (d), (e), (g), (h), (i), and (j); revising S4.4; revising in S5.1, paragraphs (a), (b), (c), (d), (e), and (f); revising in S5.2, the first paragraph of paragraph (a) and paragraphs (c), (d), (e), (f), (g), (h), (i), (j), and (k); and revising in S5.3, paragraphs (a), (b), and (c) to read as follows:

**§ 571.209 Standard No. 209, Seat belt assemblies.**

* * * * *

S4. *Requirements.*

S4.1 * * *

(f) *Attachment hardware.* A seat belt assembly shall include all hardware necessary for installation in a motor vehicle in accordance with Society of Automotive Engineers Recommended Practice J800c, ''Motor Vehicle Seat Belt Installation,'' November 1973. However, seat belt assemblies designed for installation in motor vehicles equipped with seat belt assembly anchorages that do not require anchorage nuts, plates, or washers, need not have such hardware, but shall have 7/16–20 UNF–2A or ½–13UNC–2A attachment bolts or equivalent metric hardware. The hardware shall be designed to prevent attachment bolts and other parts from becoming disengaged from the vehicle while in service. Reinforcing plates or washers furnished for universal floor, installations shall be of steel, free from burrs and sharp edges on the peripheral edges adjacent to the vehicle, at least 1.5 mm in thickness and at least 2580 $mm^2$ in projected area. The distance between any edge of the plate and the edge of the bolt hole shall be at least 15 mm. Any corner shall be rounded to a radius of not less than 6 mm or cut so that no corner angle is less than 135° and no side is less than 6 mm in length.

(g) * * *

(3) The adult occupants referred to in S4.1(g)(1) shall have the following measurements:

| | 5th percentile adult female | 95th percentile adult male |
|---|---|---|
| Weight | 46.3 kg | 97.5 kg |
| Erect sitting height | 784.9 mm | 965.2 mm |
| Hip breadth (sitting) | 325.1 mm | 419.1 mm |
| Hip circumference (sitting) | 924.6 mm | 1198.9 mm |
| Waist circumference (sitting) | 599.4 mm | 1079.5 mm |
| Chest depth | 190.5 mm | 266.7 mm |
| Chest circumference: | | |
| Nipple | 774.7 mm | 1130.3 mm |
| Upper | 756.9 mm | 1130.3 mm |
| Lower | 675.6 mm | 1130.3 mm |

* * * * *

S4.2 *Requirements for webbing.*

(a) *Width.* The width of the webbing in a seat belt assembly shall be not less than 46 mm, except for portions that do not touch a 95th percentile adult male with the seat in any adjustment position and the seat back in the manufacturer's nominal design riding position when measured under the conditions prescribed in S5.1(a).

(b) *Breaking strength.* The webbing in a seat belt assembly shall have not less than the following breaking strength when tested by the procedures specified in S5.1(b): Type 1 seat belt assembly—26,689 N; Type 2 seat belt assembly—22,241 N for webbing pelvic restraint and 17,793 N for webbing in upper torso restraint.

(c) *Elongation.* Except as provided in S4.5, the webbing in a seat belt assembly shall not extend to more than the following elongation when subjected to the specified forces in accordance with the procedure specified in S5.1(c): Type 1 seat belt assembly—20 percent at 11,120 N; Type 2 seat belt assembly 30 percent at 11,120 N for webbing in pelvic restraint and 40 percent at 11,120 N for webbing in upper torso restraint.

* * * * *

S4.3 *Requirements for hardware.*

* * * * *

(c) *Attachment hardware.* (1) Eye bolts, shoulder bolts, or other bolt used to secure the pelvic restraint of seat belt assembly to a motor vehicle shall withstand a force of 40,034 N when tested by the procedure specified in S5.2(c)(1), except that attachment bolts of a seat belt assembly designed for installation in specific models of motor vehicles in which the ends of two or more seat belt assemblies cannot be attached to the vehicle by a single bolt shall have breaking strength of not less than 22,241 N.

(2) Other attachment hardware designed to receive the ends of two seat belt assemblies shall withstand a tensile force of at least 26,689 N without fracture of a section when tested by the procedure specified in S5.2(c)(2).

(3) A seat belt assembly having single attachment hooks of the quick-disconnect type for connecting webbing to an eye bolt shall be provided with a retaining latch or keeper which shall not move more than 2 mm in either the vertical or horizontal direction when tested by the procedure specified in S5.2(c)(3).

(d) *Buckle release.* (1) The buckle of a Type 1 or Type 2 seat belt assembly shall release when a force of not more than 133 N is applied.

(2) A buckle designed for pushbutton application of buckle release force shall have a minimum area of 452 $mm^2$ with a minimum linear dimension of 10 mm for applying the release force, or a buckle designed for lever application of buckle release force shall permit the insertion of a cylinder 10 mm in diameter and 38 mm in length to at least the midpoint of the cylinder along the cylinder's entire length in the actuation portion of the buckle release. A buckle having other design for release shall have adequate access for two or more fingers to actuate release.

(3) The buckle of a Type 1 or Type 2 seat belt assembly shall not release under a compressive force of 1779 N applied as prescribed in paragraph S5.2(d)(3). The buckle shall be operable and shall meet the applicable requirement of paragraph S4.4 after the compressive force has been removed.

(e) *Adjustment force.* The force required to decrease the size of a seat belt assembly shall not exceed 49 N when measured by the procedure specified in S5.2(e).

* * * * *

(g) *Buckle latch.* The buckle latch of a seat belt assembly when tested by the procedure specified in S5.2(g) shall not fail, nor gall or wear to an extent that normal latching and unlatching is impaired, and a metal-to-metal buckle shall separate when in any position of partial engagement by a force of not more than 22 N.

(h) *Nonlocking retractor.* The webbing of a seat belt assembly shall extend from a nonlocking retractor within 6 mm of maximum length when a tension is applied as prescribed in S5.2(h). A nonlocking retractor on upper torso restraint shall be attached to the nonadjustable end of the assembly, the reel of the retractor shall be easily visible to an occupant while wearing the assembly, and the maximum retraction force shall not exceed 5 N in any strap or webbing that contacts the shoulder when measured by the procedure specified in S5.2(h), unless the retractor is attached to the free end of webbing which is not subjected to any tension during restraint of an occupant by the assembly.

(i) *Automatic-locking retractor.* The webbing of a seat belt assembly equipped with an automatic locking retractor, when tested by the procedure specified in S5.2(i), shall not move more than 25 mm between locking positions of the retractor, and shall be retracted with a force under zero acceleration of not less than 3 N when attached to pelvic restraint, and not less that 2 N nor more than 5 N in any strap or webbing that contacts the shoulders of an occupant when the retractor is attached to upper torso restraint. An automatic locking retractor attached to upper torso restraint shall not increase the restraint on the occupant of the seat belt assembly during use in a vehicle traveling over rough roads as prescribed in S5.2(i).

(j) *Emergency-locking retractor.* An emergency-locking retractor of a Type 1 or Type 2 seat belt assembly, when tested in accordance with the procedures specified in paragraph S5.2(j)—

(1) Shall lock before the webbing extends 25 mm when the retractor is subjected to an acceleration of .7 $m/s^2$;

(2) Shall not lock, if the retractor is sensitive to webbing withdrawal, before the webbing extends 51 mm when the retractor is subjected to an acceleration of 3 $m/s^2$ or less;

(3) Shall not lock, if the retractor is sensitive to vehicle acceleration, when the retractor is rotated in any direction to any angle of 15° or less from its orientation in the vehicle;

(4) Shall exert a retractive force of at least 3 N under zero acceleration when attached only to the pelvic restraint;

(5) Shall exert a retractive force of not less than 1 N and not more than 5 N under zero acceleration when attached only to an upper torso restraint;

(6) Shall exert a retractive force of not less than 1 N and not more than 7 N under zero acceleration when attached to a strap or webbing that restrains both the upper torso and the pelvis.

* * * * *

S4.4 *Requirements for assembly performance.*

(a) *Type I seat belt assembly.* Except as provided in S4.5, the complete seat belt assembly including webbing, straps, buckles, adjustment and attachment hardware, and retractors shall comply with the following requirements when tested by the procedures specified in S5.3(a):

(1) The assembly loop shall withstand a force of not less than 22,241 N; that is, each structural component of the assembly shall withstand a force of not less than 2,500 pounds or 1,1120 N.

(2) The assembly loop shall extend not more than 7 inches or 178 mm when subjected to a force of 22,241 N; that is the length of the assembly between anchorages shall not increase more than 356 mm.

(3) Any webbing cut by the hardware during test shall have a breaking strength at the cut of not less than 18,683 N.

(4) Complete fracture through any solid section of metal attachment hardware shall not occur during test.

(b) *Type 2 seat belt assembly.* Except as provided in S4.5, the components of a Type 2 seat belt assembly including webbing, straps, buckles, adjustment and attachment hardware, and retractors shall comply with the following requirements when tested by the procedure specified in S5.3(b):

(1) The structural components in the pelvic restraint shall withstand a force of not less than 11,120 N.

(2) The structural components in the upper torso restraint shall withstand a force of not less than 6,672 N.

(3) The structural components in the assembly that are common to pelvic and upper torso restraints shall withstand a force of not less than 13,345 N.

(4) The length of the pelvic restraint between anchorages shall not increase more than 508 mm when subjected to a force of 11,120 N.

(5) The length of the upper torso restraint between anchorages shall not increase more than 508 mm when subjected to a force of 6,672 N.

(6) Any webbing cut by the hardware during test shall have a breaking strength of not less than 15,569 N at a cut in webbing of the pelvic restraint, or not less than 12,455 N at a cut in webbing of the upper torso restraint.

(7) Complete fracture through any solid section of metal attachment hardware shall not occur during test.

* * * * *

S5 *Demonstration procedures.*

S5.1 *Webbing*—(a) *Width.* The width of webbing from three seat belt assemblies shall be measured after conditioning for at least 24 hours in an atmosphere having relative humidity between 48 and 67 percent and a temperature of 23°±2° C. The tension during measurement of width shall be not more than 22 N on webbing from a Type 1 seat belt assembly, and 9786 N ± 450 N on webbing from a Type 2 seat belt assembly. The width of webbing from a Type 2 seat belt assembly may be measured during the breaking strength test described in paragraph (b) of this section.

(b) *Breaking strength.* Webbing from three seat belt assemblies shall be conditioned in accordance with paragraph (a) of this section and tested for breaking strength in a testing machine of capacity verified to have an error of not more than one percent in the range of the breaking strength of the webbing in accordance with American Society for Testing and Materials E4–79 ''Standard Methods of Load Verification of Testing Machines.'' The machine shall be equipped with split drum grips illustrated in Figure 1, having a diameter between 51 and 102 mm. The rate of grip separation shall be between 51 and 102 mm per minute. The distance between the centers of the grips at the start of the test shall be between 102 and 254 mm. After placing the specimen in the grips, the webbing shall be stretched continuously at a uniform rate to failure. Each value shall be not less than the applicable breaking strength requirement in S4.2(b), but the median value shall be used for determining the retention of breaking strength in paragraphs (d), (e) and (f) of this section.

(c) *Elongation.* Elongation shall be measured during the breaking strength test described in paragraph (b) of this section by the following procedure: A preload between 196 N and 245 N shall be placed on the webbing mounted in the grips of the testing machine and the needle points of an extensometer, in which the points remain parallel during test, are inserted in the center of the specimen. Initially the points shall be set at a known distance apart between 102 and 203 mm. When the force on the webbing reaches the value specified in S4.2(c), the increase in separation of the points of the extensometer shall be measured and the percent elongation shall be calculated to the nearest 0.5 percent. Each value shall be not more than the appropriate elongation requirement in S4.2(c).

(d) *Resistance to abrasion.* The webbing from three seat belt assemblies shall be tested for resistance to abrasion

by rubbing over the hexagon bar prescribed in Figure 2 in the following manner: The webbing shall be mounted in the apparatus shown schematically in Figure 2. One end of the webbing (A) shall be attached to a mass (B) of 2.35 kg±.05 kg, except that a mass of 1.5 kg±.05 kg shall be used for webbing in pelvic and upper torso restraints of a belt assembly used in a child restraint system. The webbing shall be passed over the two new abrading edges of the hexagon bar (C) and the other end attached to an oscillating drum (D) which has a stroke of 330 mm. Suitable guides shall be used to prevent movement of the webbing along the axis of hexagonal bar C. Drum D shall be oscillated for 5,000 strokes or 2,500 cycles at a rate of 60±2 strokes per minute or 30±1 cycles per minute. The abraded webbing shall be conditioned as prescribed in paragraph (a) of this section and tested for breaking strength by the procedure described in paragraph (b) of this section. The median values for the breaking strengths determined on abraded and unabraded specimens shall be used to calculate the percentage of breaking strength retained.

(e) *Resistance to light.* Webbing at least 508 mm in length from three seat belt assemblies shall be suspended vertically on the inside of the specimen track in a Type E carbon-arc light exposure apparatus described in Standard Practice for Generating Light-Exposure Apparatus (Carbon-Arc Type) With and Without Water for Exposure of Nonmetallic Materials, ASTM Designation: G23 81, published by the American Society for Testing and Materials, except that the filter used for 100 percent polyester yarns shall be chemically strengthened soda-lime glass with a transmittance of less than 5 percent for wave lengths equal to or less than 305 nanometers and 90 percent or greater transmittance for wave lengths of 375 to 800 nanometers. The apparatus shall be operated without water spray at an air temperature of 60°±2° Celsius (°C) measured at a point 25±5 mm outside the specimen rack and midway in height. The temperature sensing element shall be shielded from radiation. The specimens shall be exposed to light from the carbon-arc for 100 hours and then conditioned as prescribed in paragraph (a) of this section. The colorfastness of the exposed and conditioned specimens shall be determined on the Geometric Gray Scale issued by the American Association of Textile Chemists and Colorists. The breaking strength of the specimens shall be determined by the procedure prescribed in paragraph (b) of this section. The median values for the breaking strengths determined on exposed and unexposed specimens shall be used to calculate the percentage of breaking strength retained.

(f) *Resistance to micro-organisms.* Webbing at least 508 millimeters (mm) in length from three seat belt assemblies shall first be preconditioned in accordance with Appendix A (1) and (2) of American Association of Textile Chemists and Colorists Test Method 381, ''Fungicides Evaluation on Textiles; Mildew and Rot Resistance of Textiles,'' and then subjected to Test I, ''Soil Burial Test'' of that test method. After soil-burial for a period of 2 weeks, the specimen shall be washed in water, dried and conditioned as prescribed in paragraph (a) of this section. The breaking strengths of the specimens shall be determined by the procedure prescribed in paragraph (b) of this section. The median values for the breaking strengths determined on exposed and unexposed specimens shall be used to calculate the percentage of breaking strength retained.

**Note:** This test shall not be required on webbing made from material which is inherently resistant to micro-organisms.

* * * * *

S5.2 *Hardware.*

(a) *Corrosion resistance.* Three seat belt assemblies shall be tested in accordance with American Society for Testing and Materials B11773, ''Standard Method of Salt Spray (Fog) Testing.'' Any surface coating or material not intended for permanent retention on the metal parts during service life shall be removed prior to preparation of the test specimens for testing. The period of test shall be 50 hours for all attachment hardware at or near the floor, consisting of two periods of 24 hours exposure to salt spray followed by 1 hour drying and 25 hours for all other hardware, consisting of one period of 24 hours exposure to salt spray followed by 1 hour drying. In the salt spray test chamber, the parts from the three assemblies shall be oriented differently, selecting those orientations most likely to develop corrosion on the larger areas. At the end of test, the seat belt assembly shall be washed thoroughly with water to remove the salt. After drying for at least 24 hours under standard laboratory conditions specified in S5.1(a) attachment hardware shall be examined for ferrous corrosion on significant surfaces, that is, all surfaces that can be contacted by a sphere 19 mm in diameter, and other hardware shall be examined for ferrous and nonferrous corrosion which may be transferred, either directly or by means of the webbing, to a person or his clothing during use of a seat belt assembly incorporating the hardware.

* * * * *

(c) *Attachment hardware.* (1) Attachment bolts used to secure the pelvic restraint of a seat belt assembly to a motor vehicle shall be tested in a manner similar to that shown in Figure 3. The load shall be applied at an angle of 45° to the axis of the bolt through attachment hardware from the seat belt assembly, or through a special fixture which simulates the loading applied by the attachment hardware. The attachment hardware or simulated fixture shall be fastened by the bolt to the anchorage shown in Figure 3, which has a standard 7/16–20UNF–2B or ½-UNF–2B or metric equivalent threaded hole in a hardened steel plate at least 10 mm in thickness. The bolt shall be installed with two full threads exposed from the fully seated position. The appropriate force required by S4.3(c) shall be applied. A bolt from each of three seat belt assemblies shall be tested.

(2) Attachment hardware, other than bolts, designed to receive the ends of two seat belt assemblies shall be subjected to a tensile force of 26,689 N in a manner simulating use. The hardware shall be examined for fracture after the force is released. Attachment hardware from three seat belt assemblies shall be tested.

(3) Single attachment hook for connecting webbing to any eye bolt shall be tested in the following manner: The hook shall be held rigidly so that the retainer latch or keeper, with cotter pin or other locking device in place, is in a horizontal position as shown in Figure 4. A force of 667 N±9 N shall be applied vertically as near as possible to the free end of the retainer latch, and the movement of the latch by this force at the point of application shall be measured. The vertical force shall be released, and a force of 667 N±9 N shall be applied horizontally as near as possible to the free end of the retainer latch. The movement of the latch by this force at the point of load application shall be measured. Alternatively, the hook may be held in other positions, provided the forces are applied and the movements of the latch are measured at the points indicated in Figure 4. A single attachment hook from each of three seat belt assemblies shall be tested.

(d) *Buckle release.* (1) Three seat belt assemblies shall be tested to determine compliance with the maximum buckle release force requirements, following the assembly test in S5.3. After

subjection to the force applicable for the assembly being tested, the force shall be reduced and maintained at 667 N on the assembly loop of a Type 1 seat belt assembly, 334 N the components of a Type 2 seat belt assembly. The buckle release force shall be measured by applying a force on the buckle in a manner and direction typical of those which would be employed by a seat belt occupant. For push button-release buckles, the force shall be applied at least 3 mm from the edge of the push button access opening of the buckle in a direction that produces maximum releasing effect. For lever-release buckles, the force shall be applied on the centerline of the buckle lever or finger tab in a direction that produces maximum releasing effect.

(2) The area for application of release force on pushbutton actuated buckle shall be measured to the nearest 30 mm ². The cylinder specified in S4.3(d) shall be inserted in the actuation portion of a lever released buckle for determination of compliance with the requirement. A buckle with other release actuation shall be examined for access of release by fingers.

(3) The buckle of a Type 1 or Type 2 seat belt assembly shall be subjected to a compressive force of 1779 N applied anywhere on a test line that is coincident with the center line of the belt extended through the buckle or on any line that extends over the center of the release mechanism and intersects the extended centerline of the belt at an angle of 60°. The load shall be applied by using a curved cylindrical bar having a cross section diameter of 19 mm and a radius of curvature of 152 mm, placed with its longitudinal center line along the test line and its center directly above the point or the buckle to which the load will be applied. The buckle shall be latched, and a tensile force of 334 N shall be applied to the connected webbing during the application of the compressive force. Buckles from three seat belt assemblies shall be tested to determine compliance with paragraph S4.3(d)(3).

(e) *Adjustment Force.* Three seat belt assemblies shall be tested for adjustment force on the webbing at the buckle, or other manual adjusting device normally used to adjust the size of the assembly. With no load on the anchor end, the webbing shall be drawn through the adjusting device at a rate of 508 mm ±5 mm per minute and the maximum force shall be measured to the nearest 1 N after the first 25 mm of webbing movement. The webbing shall be precycled 10 times prior to measurement.

(f) *Tilt-lock adjustment.* This test shall be made on buckles or other manual adjusting devices having tilt-lock adjustment normally used to adjust the size of the assembly. Three buckles or devices shall be tested. The base of the adjustment mechanism and the anchor end of the webbing shall be oriented in planes normal to each other. The webbing shall be drawn through the adjustment mechanism in a direction to increase belt length at a rate of 508 mm ±50 mm per minute while the plane of the base is slowly rotated in a direction to lock the webbing. Rotation shall be stopped when the webbing locks, but the pull on the webbing shall be continued until there is a resistance of at least 89 N. The locking angle between the anchor end of the webbing and the base of the adjustment mechanism shall be measured to the nearest degree. The webbing shall be precycled 10 times prior to measurement.

(g) *Buckle latch.* The buckles from three seat belt assemblies shall be opened fully and closed at least 10 times. Then the buckles shall be clamped or firmly held against a flat surface so as to permit normal movement of buckle part, but with the metal mating plate (metal-to-metal buckles) or of webbing end (metal-to-webbing buckles) withdrawn from the buckle. The release mechanism shall be moved 200 times through the maximum possible travel against its stop with a force of 133 N±13 N at a rate not to exceed 30 cycles per minute. The buckle shall be examined to determine compliance with the performance requirements of S4.3(g). A metal-to-metal buckle shall be examined to determine whether partial engagement is possible by means of any technique representative of actual use. If partial engagement is possible, the maximum force of separation when in such partial engagement shall be determined.

(h) *Nonlocking retractor.* After the retractor is cycled 10 times by full extension and retraction of the webbing, the retractor and webbing shall be suspended vertically and a force of 18 N shall be applied to extend the webbing from the retractor. The force shall be reduced to 13 N when attached to a pelvic restraint, or to 5 N per strap or webbing that contacts the shoulder of an occupant when retractor is attached to an upper torso restraint. The residual extension of the webbing shall be measured by manual rotation of the retractor drum or by disengaging the retraction mechanism. Measurements shall be made on three retractors. The location of the retractor attached to upper torso restraint shall be examined for visibility of reel during use of seat belt assembly in a vehicle.

**Note:** This test shall not be required on a nonlocking retractor attached to the free end of webbing which is not subjected to any tension during restraint of an occupant by the assembly.

(i) *Automatic-locking retractor.* Three retractors shall be tested in a manner to permit the retraction force to be determined exclusive of the gravitational forces on hardware or webbing being retracted. The webbing shall be fully extended from the retractor. While the webbing is being retracted, the average force or retraction within plus or minus 51 mm of 75 percent extension (25 percent retraction) shall be determined and the webbing movement between adjacent locking segments shall be measured in the same region of extension. A seat belt assembly with automatic-locking retractor in upper torso restraint shall be tested in a vehicle in a manner prescribed by the installation and usage instructions. The retraction force on the occupant of the seat belt assembly shall be determined before and after traveling for 10 minutes at a speed of 24 kilometers per hour (km/h) or more over a rough road (e.g., Belgian block road) where the occupant is subjected to displacement with respect to the vehicle in both horizontal and vertical directions. Measurements shall be made with the vehicle stopped and the occupant in the normal seated position.

(j) *Emergency-locking retractor.* A retractor shall be tested in a manner that permits the retraction force to be determined exclusive of the gravitational forces on hardware or webbing being retracted. The webbing shall be fully extended from the retractor, passing over or through any hardware or other material specified in the installation instructions. While the webbing is being retracted, the lowest force of retraction within plus or minus 51 mm of 75 percent extension shall be determined. A retractor that is sensitive to webbing withdrawal shall be subjected to an acceleration of $3 m/s^2$ within a period of 50 milliseconds (ms) while the webbing is at 75 percent extension, to determine compliance with S4.3(j)(2). The retractor shall be subjected to an acceleration of $7 m/s^2$ within a period of 50 milliseconds (ms), while the webbing is at 75 percent extension, and the webbing movement before locking shall be measured under the following conditions: For a retractor sensitive to webbing withdrawal, the retractor shall be accelerated in the direction of webbing retraction while the retractor drum's central axis is

oriented horizontally and at angles of 45°, 90°, 135°, and 180° to the horizontal plane. For a retractor sensitive to vehicle acceleration, the retractor shall be:

(1) Accelerated in the horizontal plane in two directions normal to each other, while the retractor drum's central axis is oriented at the angle at which it is installed in the vehicle; and,

(2) Accelerated in three directions normal to each other while the retractor drum's central axis is oriented at angles of 45°, 90°, 135°, and 180° from the angle at which it is installed in the vehicle, unless the retractor locks by gravitational force when tilted in any direction to any angle greater than 45° from the angle at which it is installed in the vehicle.

(k) *Performance of retractor.* After completion of the corrosion-resistance test described in paragraph (a) of this section, the webbing shall be fully extended and allowed to dry for at least 24 hours under standard laboratory conditions specified in S5.1(a). The retractor shall be examined for ferrous and nonferrous corrosion which may be transferred, either directly or by means of the webbing, to a person or his clothing during use of a seat belt assembly incorporating the retractor, and for ferrous corrosion on significant surfaces if the retractor is part of the attachment hardware. The webbing shall be withdrawn manually and allowed to retract for 25 cycles. The retractor shall be mounted in an apparatus capable of extending the webbing fully, applying a force of 89 N at full extension, and allowing the webbing to retract freely and completely. The webbing shall be withdrawn from the retractor and allowed to retract repeatedly in this apparatus until 2,500 cycles are completed. The retractor and webbing shall then be subjected to the temperature resistance test prescribed in paragraph (b) of this section. The retractor shall be subjected to 2,500 additional cycles of webbing withdrawal and retraction. Then, the retractor and webbing shall be subjected to dust in a chamber similar to one illustrated in Figure 8 containing about 0.9 kg of coarse grade dust conforming to the specification given in Society of Automotive Engineering Recommended Practice J726, ''Air Cleaner Test Code'' Sept. 1979. The dust shall be agitated every 20 minutes for 5 seconds by compressed air, free of oil and moisture, at a gage pressure of 550±55 kPa entering through an orifice 1.5±0.1 mm in diameter. The webbing shall be extended to the top of the chamber and kept extended at all times except that the webbing shall be subjected to 10 cycles of complete retraction and extension within 1 to 2 minutes after each agitation of the dust. At the end of 5 hours, the assembly shall be removed from the chamber. The webbing shall be fully withdrawn from the retractor manually and allowed to retract completely for 25 cycles. An automatic-locking retractor or a nonlocking retractor attached to pelvic restraint shall be subjected to 5,000 additional cycles of webbing withdrawal and retraction. An emergency locking retractor or a nonlocking retractor attached to upper torso restraint shall be subjected to 45,000 additional cycles of webbing withdrawal and retraction between 50 and 100 percent extension. The locking mechanism of an emergency locking retractor shall be actuated at least 10,000 times within 50 to 100 percent extension of webbing during the 50,000 cycles. At the end of test, compliance of the retractors with applicable requirements in S4.3 (h), (i), and (j) shall be determined. Three retractors shall be tested for performance.

S5.3 *Assembly performance—(a) Type 1 seatbelt assembly.* Three complete seat belt assemblies, including webbing, straps, buckles, adjustment and attachment hardware, and retractors, arranged in the form of a loop as shown in Figure 5, shall be tested in the following manner:

(1) The testing machine shall conform to the requirements specified in S5.1(b). A double-roller block shall be attached to one head of the testing machine. This block shall consist of two rollers 102 mm in diameter and sufficiently long so that no part of the seatbelt assembly touches parts of the block other than the rollers during test. The rollers shall be mounted on antifriction bearings and spaced 305 mm between centers, and shall have sufficient capacity so that there is no brinelling, bending or other distortion of parts which may affect the results. An anchorage bar shall be fastened to the other head of the testing machine.

(2) The attachment hardware furnished with the seat belt assembly shall be attached to the anchorage bar. The anchor points shall be spaced so that the webbing is parallel in the two sides of the loop. The attaching bolts shall be parallel to, or at an angle of 45° or 90° to the webbing, whichever results in an angle nearest to 90° between webbing and attachment hardware except that eye bolts shall be vertical, and attaching bolts or nonthreaded anchorages of a seat belt assembly designed for use in specific models of motor vehicles shall be installed to produce the maximum angle in use indicated by the installation instructions, utilizing special fixtures if necessary to simulate installation in the motor vehicle. Rigid adapters between anchorage bar and attachment hardware shall be used if necessary to locate and orient the adjustment hardware. The adapters shall have a flat support face perpendicular to the threaded hole for the attaching bolt and adequate in area to provide full support for the base of the attachment hardware connected to the webbing. If necessary, a washer shall be used under a swivel plate or other attachment hardware to prevent the webbing from being damaged as the attaching bolt is tightened.

(3) The length of the assembly loop from attaching bolt to attaching bolt shall be adjusted to about 1295 mm, or as near thereto as possible. A force of 245 N shall be applied to the loop to remove any slack in webbing at hardware. The force shall be removed and the heads of the testing machine shall be adjusted for an assembly loop between 1220 and 1270 mm in length. The length of the assembly loop shall then be adjusted by applying a force between 89 or 98 N to the free end of the webbing at the buckle, or by the retraction force of an automatic-locking or emergency-locking retractor. A seat belt assembly that cannot be adjusted to this length shall be adjusted as closely as possible. An automatic-locking or emergency locking retractor when included in a seat belt assembly shall be locked at the start of the test with a tension on the webbing slightly in excess of the retractive force in order to keep the retractor locked. The buckle shall be in a location so that it does not touch the rollers during test, but to facilitate making the buckle release test in S5.2(d) the buckle should be between the rollers or near a roller in one leg.

(4) The heads of the testing machine shall be separated at a rate between 51 and 102 mm per minute until a force of 22,241±222 N is applied to the assembly loop. The extension of the loop shall be determined from measurements of head separation before and after the force is applied. The force shall be decreased to 667±45 N and the buckle release force measured as prescribed in S5.2(d).

(5) After the buckle is released, the webbing shall be examined for cutting by the hardware. If the yarns are partially or completely severed in a line for a distance of 10 percent or more of the webbing width, the cut webbing shall be tested for breaking strength as specified in S5.1(b) locating the cut in the free length between grips. If there is insufficient webbing on either side of the cut to make such a test for breaking

strength, another seat belt assembly shall be used with the webbing repositioned in the hardware. A tensile force of 11,120±111 N shall be applied to the components or a force of 22,241±222 N shall be applied to the assembly loop. After the force is removed, the breaking strength of the cut webbing shall be determined as prescribed above.

(6) If a Type 1 seat belt assembly includes an automatic-locking retractor or an emergency-locking retractor, the webbing and retractor shall be subjected to a tensile force of 11,120±111 N with the webbing fully extended from the retractor.

(7) If a seat belt assembly has a buckle in which the tongue is capable of inverted insertion, one of the three assemblies shall be tested with the tongue inverted.

(b) *Type 2 seat belt assembly*. Components of three seat belt assemblies shall be tested in the following manner:

(1) The pelvic restraint between anchorages shall be adjusted to a length between 1220 and 1270 mm, or as near this length as possible if the design of the pelvic restraint does not permit its adjustment to this length. An automatic-locking or emergency-locking retractor when included in a seat belt assembly shall be locked at the start of the test with a tension on the webbing slightly in excess of the retractive force in order to keep the retractor locked. The attachment hardware shall be oriented to the webbing as specified in paragraph (a)(2) of this section and illustrated in Figure 5. A tensile force 11,120±111 N shall be applied on the components in any convenient manner and the extension between anchorages under this force shall be measured. The force shall be reduced to 334±22 N and the buckle release force measured as prescribed in S5.2(d).

(2) The components of the upper torso restraint shall be subjected to a tensile force of 6,672±67 N following the procedure prescribed above for testing pelvic restraint and the extension between anchorages under this force shall be measured. If the testing apparatus permits, the pelvic and upper torso restraints may be tested simultaneously. The force shall be reduced to 334±22 N and the buckle release force measured as prescribed in S5.2(d).

(3) Any component of the seat belt assembly common to both pelvic and upper torso restraint shall be subjected to a tensile force of 13,344±134 N.

(4) After the buckle is released in tests of pelvic and upper torso restraints, the webbing shall be examined for cutting by the hardware. If the yarns are partially or completely severed in a line for a distance of 10 percent or more of the webbing width, the cut webbing shall be tested for breaking strength as specified in S5.1(b) locating the cut in the free length between grips. If there is insufficient webbing on either side of the cut to make such a test for breaking strength, another seat belt assembly shall be used with the webbing repositioned in the hardware. The force applied shall be 11,120±111 N for components of pelvic restraint, and 6,672±67 N for components of upper torso restraint. After the force is removed, the breaking strength of the cut webbing shall be determined as prescribed above.

(5) If a Type 2 seat belt assembly includes an automatic-locking retractor or an emergency-locking retractor the webbing and retractor shall be subjected to a tensile force of 11,120±111 N with the webbing fully extended from the retractor, or to a tensile force of 6,672±67 N with the webbing fully extended from the retractor if the design of the assembly permits only upper torso restraint forces on the retractor.

(6) If a seat belt assembly has a buckle in which the tongue is capable of inverted insertion, one of the three assemblies shall be tested with the tongue inverted.

(c) *Resistance to buckle abrasion*. Seatbelt assemblies shall be tested for resistance to abrasion by each buckle or manual adjusting device normally used to adjust the size of the assembly. The webbing of the assembly to be used in this test shall be exposed for 4 hours to an atmosphere having relative humidity of 65 percent and temperature of 18 °C. The webbing shall be pulled back and forth through the buckle or manual adjusting device as shown schematically in Figure 7. The anchor end of the webbing (A) shall be attached to a mass (B) of 1.4 kg. The webbing shall pass through the buckle (C), and the other end (D) shall be attached to a reciprocating device so that the webbing forms an angle of 8° with the hinge stop (E). The reciprocating device shall be operated for 2,500 cycles at a rate of 18 cycles per minute with a stroke length of 203 mm. The abraded webbing shall be tested for breaking strength by the procedure described in paragraph S5.1(b).

* * * * *

23. Section 571.210 would be amended by revising in S4.2.1 the introductory paragraph; revising S4.2.2; revising S4.2.4; revising S4.3.1.1; revising S4.3.1.4; removing S4.3.1.5; revising S5.1; revising S5.2; and revising in S6, the introductory text, to read as follows:

**§ 571.210 Standard No. 210; Seatbelt assembly anchorages.**

* * * * *

S4.2.1 Except as provided in S4.2.5, and except for side-facing seats, the anchorages, attachment hardware, and attachment bolts for any of the following seatbelt assemblies shall withstand a 22,241 N force when tested in accordance with S5.1 of this standard:

* * * * *

S4.2.2 Except as provided in S4.2.5, the anchorages, attachment hardware, and attachment bolts for all Type 2 and automatic seatbelt assemblies that are installed to comply with Standard No. 208 (49 CFR 571.208) shall withstand 13,345 N forces when tested in accordance with S5.2.

* * * * *

S4.2.4. Anchorages, attachment hardware, and attachment bolts shall be tested by simultaneously loading them in accordance with the applicable procedures set forth in S5 of this standard if the anchorages are either:

(a) For designated seating positions that are common to the same occupant seat and that face in the same direction, or

(b) For laterally adjacent designated seating positions that are not common to the same occupant seat, but that face in the same direction, if the vertical centerline of the bolt hole for at least one of the anchorages for one of those designated seating positions is within 305 mm of the vertical center line of the bolt hole for an anchorage for one of the adjacent seating positions.

* * * * *

S4.3.1.1 In an installation in which the seat belt does not bear upon the seat frame:

(a) If the seat is a nonadjustable seat, then a line from the seating reference point to the nearest contact point of the belt with the anchorage shall extend forward from the anchorage at an angle with the horizontal of not less than 30 degrees and not more than 75 degrees.

(b) If the seat is an adjustable seat, then a line from a point 64 mm forward of and 10 mm above the seating reference point to the nearest contact point of the belt with the anchorage shall extend forward from the anchorage at an angle with the horizontal of not less than 30 degrees and not more than 75 degrees.

* * * * *

S4.3.1.4 Anchorages for an individual seat belt assembly shall be located at least 165 mm apart laterally, measured between the vertical center

line of the bolt holes or, for designs using other means of attachment to the vehicle structure, between the centroid of such means.

S4.3.1.5 [Reserved]

* * * * *

S5.1 *Seats with Type 1 or Type 2 seat belt anchorages.* With the seat in its rearmost position, apply a force of 22,241 N in the direction in which the seat faces to a pelvic body block as described in Figure 2A, in a plane parallel to the longitudinal centerline of the vehicle, with an initial force application angle of not less than 5 degrees or more than 15 degrees above the horizontal. Apply the force at the onset rate of not more than 222,411 N per second. Attain the 22,241 N force in not more than 30 seconds and maintain it for 10 seconds. At the manufacturer's option, the pelvic body block described in Figure 2B may be substituted for the pelvic body block described in Figure 2A to apply the specified force to the center set(s) of anchorages for any group of three or more sets of anchorages that are simultaneously loaded in accordance with S4.2.4 of this standard.

S5.2 *Seats with Type 2 or automatic seat belt anchorages.* With the seat in its rearmost position, apply forces of 13,345 N in the direction in which the seat faces simultaneously to a pelvic body block, as described in Figure 2A, and an upper torso body block, as described in Figure 3, in a plane parallel to the longitudinal centerline of the vehicle, with an initial force application angle of not less than 5 degrees nor more than 15 degrees above the horizontal. Apply the forces at the onset rate of not more than 133,447 N per second. Attain the 13,345 N force in not more than 30 seconds and maintain it for 10 seconds. At the manufacturer's option, the pelvic body block described in Figure 2B may be substituted for the pelvic body block described in Figure 2A to apply the specified force to the center set(s) of anchorages for any group of three or more sets of anchorages that are simultaneously loaded in accordance with S4.2.4 of this standard.

* * * * *

S6. *Owner's Manual Information.* The owner's manual in each vehicle with a gross vehicle weight rating of 4,536 kg or less manufactured after September 1, 1987 shall include:

* * * * *

23. In § 571.210, Figure 2 ''Body Block for Lap Belt Anchorage'' would be removed. Figure 2A ''Body Block for Lap Belt Anchorage'', Figure 2B ''Optional Body Block for Center Seating Positions'', and Figure 3 ''Body Block for Combination Shoulder and Lap Belt Anchorage'' after S5.2, and preceding S6, would be revised to read as follows:

BILLING CODE 4910–59–P

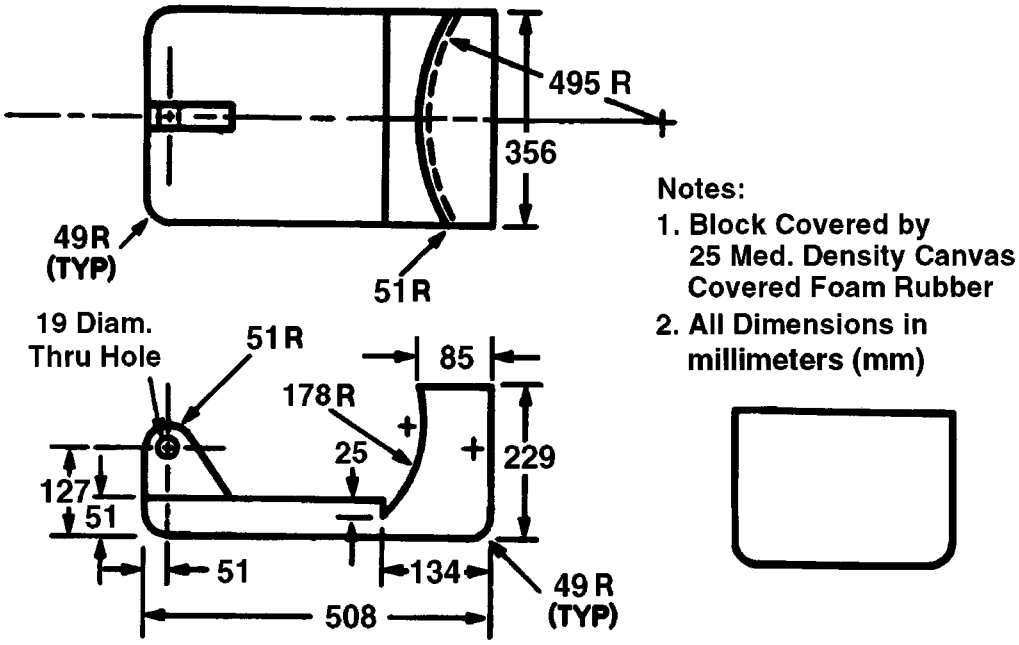


Figure 2A.—Body Block for Lap Belt Anchorage

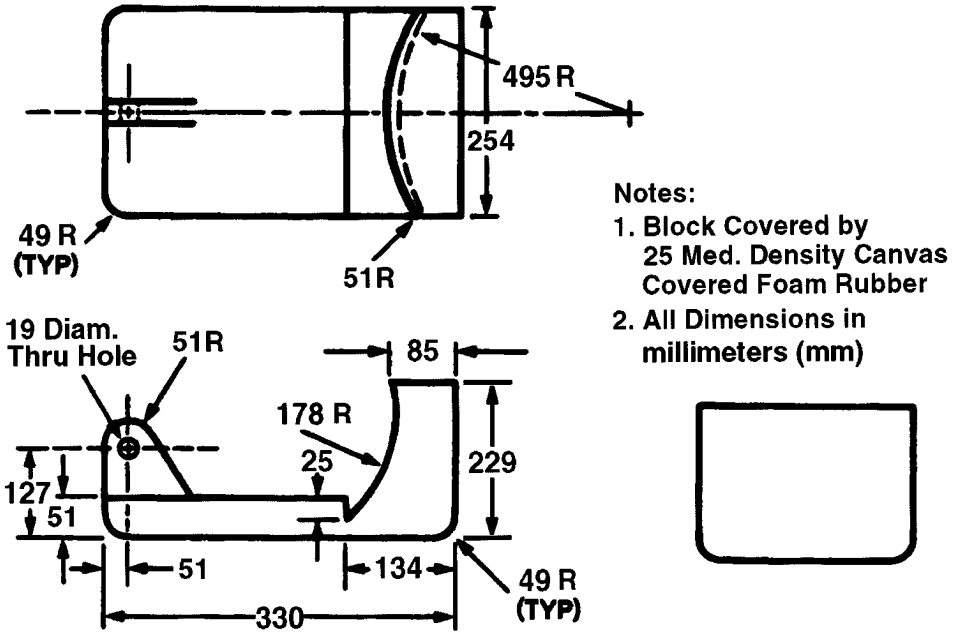


**Figure 2B.—Optional Body Block for Center Seating Positions**

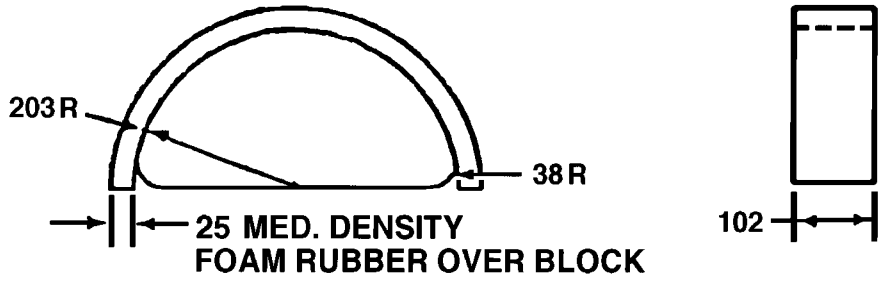


**Figure 3.—Body Block for Combination Shoulder and Lap Belt Anchorage**
**All dimensions in millimeters (mm)**

BILLING CODE 4910–59–C

25. Section 571.219 would be amended by revising S3; revising S5; revising S6.1; revising S6.2; and revising in S7.7, paragraph (b) to read as follows:

**§ 571.219 Standard No. 219, Windshield zone intrusion.**

* * * * *

S3. *Application.* This standard applies to passenger cars and to multipurpose passenger vehicles, trucks and buses of 4,536 kilograms or less gross vehicle weight rating. However, it does not apply to forward control vehicles, walk-in van-type vehicles, or to open-body-type vehicles with fold-down or removable windshields.

* * * * *

S5. *Requirement.* When the vehicle travelling longitudinally forward at any speed up to and including 48 km/h impacts a fixed collision barrier that is perpendicular to the line of travel of the vehicle, under the conditions of S7, no part of the vehicle outside the occupant compartment, except windshield molding and other components designed to be normally in contact with the windshield, shall penetrate the protected zone template, affixed according to S6, to a depth of more than 6 mm, and no such part of a vehicle shall penetrate the inner surface of that portion of the windshield, within the DLO, below the protected zone defined in S6.

S6. *Protected zone template.*

S6.1 The lower edge of the protected zone is determined by the following procedure (See Figure 1).

(a) Place a 165 mm diameter rigid sphere, with a mass of 6.8 kg in a position such that it simultaneously contacts the inner surface of the windshield glazing and the surface of the instrument panel, including padding. If any accessories or equipment such as the steering control system obstruct positioning of the sphere, remove them for the purposes of this procedure.

(b) Draw the locus of points on the inner surface of the windshield contactable by the sphere across the width of the instrument panel. From the outermost contactable points, extend the locus line horizontally to the edges of the glazing material.

(c) Draw a line on the inner surface of the windshield below and 13 mm distant from the locus line.

(d) The lower edge of the protected zone is the longitudinal projection onto the outer surface of the windshield of the line determined in S6.1(c).

S6.2 The protected zone is the space enclosed by the following surfaces, as shown in Figure 1:

(a) The outer surface of the windshield in its precrash configuration.

(b) The locus of points 76 mm outward along perpendiculars drawn to each point on the outer surface of the windshield.

(c) The locus of lines forming a 45° angle with the outer surface of the windshield at each point along the top and side edges of the outer surface of the windshield and the lower edge of the protected zone determined in S6.1, in the plane perpendicular to the edge at that point.

* * * * *

S7.7 * * *

* * * * *

(b) Except as specified in S7.6, a multipurpose passenger vehicle, truck or bus is loaded to its unloaded vehicle weight, plus 136 kg or its rated cargo and luggage capacity, whichever is less, secured to the vehicle, plus a 50th-percentile test dummy as specified in part 572 of this chapter at each front outboard designated seating postion and at any other position whose protection system is required to be tested by a dummy under the provisions of Standard No. 208. Each dummy is restrained only by means that are installed for protection at its seating position. The load is distributed so that the mass on each axle as measured at the tire-ground interface is in proportion to its GAWR. If the mass on any axle when the vehicle is loaded to its unloaded vehicle weight plus dummy mass exceeds the axle's proportional share of the test mass, the remaining mass is placed so that the mass on that axle remains the same. For the purposes of this section, unloaded vehicle weight does not include the mass of work-performing accessories. Vehicles are tested to a maximum unloaded vehicle weight of 2,495 kg.

* * * * *

26. Section 571.220 would be amended by revising S4; revising S5.2; revising S5.4; revising S5.5; and revising S6.1 to read as follows:

**§ 571.220 Standard No. 220; School bus rollover protection.**

* * * * *

S4. *Requirements.* When a force in Newtons equal to 1½ times the unloaded vehicle weight in kilograms multiplied by 9.8 m/sec$^2$ is applied to the roof of the vehicle's body structure through a force application plate as specified in S5, Test procedures—

(a) The downward vertical movement at any point on the application plate shall not exceed 130 mm and

(b) Each emergency exit of the vehicle provided in accordance with Standard No. 217 (§ 571.217) shall be capable of opening as specified in that standard during the full application of the force and after release of the force, except that an emergency exit located in the roof of the vehicle is not required to be capable of being opened during the application of the force. A particular vehicle (i.e., test specimen) need not meet the emergency exit opening requirement after release of force if it is subjected to the emergency exit opening requirements during the full application of the force.

* * * * *

S5.2 Use a flat, rigid, rectangular force application plate that is measured with respect to the vehicle roof longitudinal and lateral centerlines,

(a) In the case of a vehicle with a GVWR of more than 4,536 kg, 305 mm shorter than the vehicle roof and 914 mm wide; and

(b) In the case of a vehicle with a GVWR of 4,536 kg or less, 127 mm longer and 127 mm wider than the vehicle roof. For purposes of these measurements, the vehicle roof is that structure, seen in the top projected view, that coincides with the passenger and driver compartment of the vehicle.

* * * * *

S5.4 Apply an evenly-distributed vertical force in the downward direction to the force application plate at any rate not more than 13 mm per second, until a force of 2,224 N has been applied.

S5.5 Apply additional vertical force in the downward direction to the force application plate at a rate of not more than 13 mm per second until the force specified in S4. has been applied, and maintain this application of force.

* * * * *

S6.1 *Temperature.* The ambient temperature is any level between 0 °C and 32 °C.

* * * * *

27. Section 571.222 would be amended by revising in S4, the definition of ''contactable surface''; revising S4.1; revising in S5., paragraphs (a) and (b); revising S5.1.2; revising S5.1.3; revising S5.1.3.1; revising S5.1.3.2; revising S5.1.3.3; revising S5.1.3.4; revising S5.1.4; revising S5.1.4.1; revising S5.1.4.2; revising S5.1.5; revising S5.2; revising S5.2.1; revising S5.2.3; revising S5.3.1.1; revising S5.3.1.2; revising S5.3.1.3; revising S5.3.2.1; revising S5.3.2.2; revising S6.3; revising S6.5; revising S6.5.1; revising S6.6; and revising S6.7 to read as follows:

**§ 571.222 Standard No. 222; School bus passenger seating and crash protection.**

* * * * *

S4. *Definitions. Contactable surface* means any surface within the zone specified in S5.3.1.1 that is contactable from any direction by the test device described in S6.6, except any surface on the front of a seat back or restraining barrier 76 mm or more below the top of the seat back or restraining barrier.

* * * * *

S4.1 The number of seating positions considered to be in a bench seat is expressed by the symbol W, and calculated as the bench width in millimeters divided by 381 and rounded to the nearest whole number.

S5. *Requirements.* (a) Each vehicle with a gross vehicle weight rating of more than 4,536 kg shall be capable of meeting any of the requirements set forth under this heading when tested under the conditions of S6. However, a particular school bus passenger seat (i.e., test specimen) in that weight class need not meet further requirements after having met S5.1.2 and S5.1.5, or having been subjected to either S5.1.3, S5.1.4, or S5.3.

(b) Each vehicle with a gross vehicle weight rating of 4,536 kg or less shall be capable of meeting the following requirements at all seating positions other than the driver's seat:

(1) (A) In the case of vehicles manufactured before September 1, 1991, the requirements of §§ 571.208, 571.209, and 571.210 as they apply to multipurpose passenger vehicles; or

(B) In the case of vehicles manufactured on or after September 1, 1991, the requirements of S4.4.3.3 of § 571.208 and the requirements of §§ 571.209 and 571.210 as they apply to school buses with a gross vehicle weight rating of 4,536 kg or less; and

(2) The requirements of S5.1.2, S5.1.3, S5.1.4, S5.1.5, S5.3, and S5.4 of this standard. However, the requirements of §§ 571.208 and 571.210 shall be met at W seating positions in a bench seat using a body block as specified in Figure 2 of this standard, and a particular school bus passenger seat (i.e., a test specimen) in that weight class need not meet further requirements after having met S5.1.2 and S5.1.5, or after having been subjected to either S5.1.3, S5.1.4, or S5.3 of this standard or § 571.210.

* * * * *

S5.1.2 *Seat back height and surface area.* Each school bus passenger seat shall be equipped with a seat back that, in the front projected view, has a front surface area above the horizontal plane that passes through the seating reference point, and below the horizontal plane 508 mm above the seating reference point, of not less than 90 percent of the seat bench width in millimeters multiplied by 508.

S5.1.3 *Seat performance forward.* When a school bus passenger seat that has another seat behind it is subjected to the application of force as specified in S5.1.3.1 and S5.1.3.2, and subsequently, the application of additional force to the seat back as specified in S5.1.3.3 and S5.1.3.4:

(a) The seat back force/deflection curve shall fall within the zone specified in Figure 1;

(b) Seat back deflection shall not exceed 356 mm; (for determination of (a) and (b) the force/deflection curve describes only the force applied through the upper loading bar, and only the forward travel of the pivot attachment point of the upper loading bar, measured from the point at which the initial application of 44 N of force is attained.)

(c) The seat shall not deflect by an amount such that any part of the seat moves to within 102 mm of any part of another school bus passenger seat or restraining barrier in its originally installed position;

(d) The seat shall not separate from the vehicle at any attachment point; and

(e) Seat components shall not separate at any attachment point.

S5.1.3.1 Position the loading bar specified in S6.5 so that it is laterally centered behind the seat back with the bar's longitudinal axis in a transverse plane of the vehicle and in any horizontal plane between 102 mm above and 102 mm below the seating reference point of the school bus passenger seat behind the test specimen.

S5.1.3.2 Apply a force of 3,114W Newtons horizontally in the forward direction through the loading bar at the pivot attachment point. Reach the specified load in not less than 5 nor more than 30 seconds.

S5.1.3.3 No sooner than 1.0 second after attaining the required force, reduce that force to 1,557W Newtons and, while maintaining the pivot point position of the first loading bar at the position where the 1,557W Newtons is attained, position a second loading bar described in S6.5 so that it is laterally centered behind the seat back with the bar's longitudinal axis in a transverse plane of the vehicle and in the horizontal plane 406 mm above the seating reference point of the school bus passenger seat behind the test specimen, and move the bar forward against the seat back until a force of 44 N has been applied.

S5.1.3.4 Apply additional force horizontally in the forward direction through the upper bar until 452W Joules of energy have been absorbed in deflecting the seat back (or restraining barrier). Apply the additional load in not less than 5 seconds nor more than 30 seconds. Maintain the pivot attachment point in the maximum forward travel position for not less than 5 seconds nor more than 10 seconds and release the load in not less than 5 nor more than 30 seconds. (For the determination of S5.1.3.4 the force/deflection curve describes only the force applied through the upper loading bar, and the forward and rearward travel distance of the upper loading bar pivot attachment point measured from the position at which the initial application of 44 N of force is attained.)

S5.1.4 *Seat performance rearward.* When a school bus passenger seat that has another seat behind it is subjected to the application of force as specified in S5.1.4.1 and S5.1.4.2:

(a) Seat back force shall not exceed 9,786 N;

(b) Seat back deflection shall not exceed 254 mm; (for determination of (a) and (b) the force/deflection curve describes only the force applied through the loading bar, and only the rearward travel of the pivot attachment point of the loading bar, measured from the point at which the initial application of 222 N is attained.

(c) The seat shall not deflect by an amount such that any part of the seat moves to within 102 mm of any part of another passenger seat in its originally installed position;

(d) The seat shall not separate from the vehicle at any attachment point; and

(e) Seat components shall not separate at any attachment point.

S5.1.4.1 Position the loading bar described in S6.5 so that it is laterally centered forward of the seat back with the bar's longitudinal axis in a transverse plane of the vehicle and in the horizontal plane 343 mm above the seating reference point of the test specimen, and move the loading bar rearward against the seat back until a force of 222 N has been applied.

S5.1.4.2 Apply additional force horizontally rearward through the loading bar until 316W Joules (J) of energy has been absorbed in deflecting the seat back. Apply the additional load in not less than 5 seconds nor more than 30 seconds. Maintain the pivot attachment point in the maximum rearward travel position for not less than 5 seconds nor more than 10 seconds and release the load in not less than 5 seconds nor more than 30 seconds. (For determination of S5.1.4.2 the force deflection curve describes the force applied through the loading bar and the rearward and forward travel distance of the loading bar pivot

attachment point measured from the position at which the initial application of 222 N of force is attained.)

S5.1.5 *Seat cushion retention.* In the case of school bus passenger seats equipped with seat cushions, with all manual attachment devices between the seat and the seat cushion in the manufacturer's designated position for attachment, the seat cushion shall not separate from the seat at any attachment point when subjected to an upward force in Newtons of 5 times the mass of seat cushion in kilograms multiplied by 9.8 m/s², applied in any period of not less than 1 nor more than 5 seconds, and maintained for 5 seconds.

S5.2 *Restraining barrier requirements.* Each vehicle shall be equipped with a restraining barrier forward of any designated seating position that does not have the rear surface of another school bus passenger seat within 610 mm of its seating reference point, measured along a horizontal longitudinal line through the seating reference point in the forward direction.

S5.2.1 *Barrier-seat separation.* The horizontal distance between the restraining barrier's rear surface and the seating reference point of the seat in front of which the barrier is required shall not be more than 610 mm measured along a horizontal longitudinal line through the seating reference point in the forward direction.

* * * * *

S5.2.3 *Barrier performance forward.* When force is applied to the restraining barrier in the same manner as specified in S5.1.3.1 through S5.1.3.4 for seating performance tests:

(a) The restraining barrier force/deflection curve shall fall within the zone specified in Figure 1;

(b) Restraining barrier deflection shall not exceed 356 mm; (for computation of (a) and (b) the force/deflection curve describes only the force applied though the upper loading bar, and only the forward travel of the pivot attachment point of the loading bar, measured from the point at which the initial application of 44 N of force is attained.)

(c) Restraining barrier deflection shall not interfere with normal door operation;

(d) The restraining barrier shall not separate from the vehicle at any attachment point; and

(e) Restraining barrier components shall not separate at any attachment point.

* * * * *

S5.3.1.1 The head protection zones in each vehicle are the spaces in front of each school bus passenger seat which are not occupied by bus sidewall, window, or door structure and which, in relation to that seat and its seating reference point, are enclosed by the following planes;

(a) Horizontal planes 305 mm and 1016 mm above the seating reference point;

(b) A vertical longitudinal plane tangent to the inboard (aisle side) edge of the seat; and

(c) A vertical longitudinal plane 83 mm inboard of the outboard edge of the seat;

(d) Vertical transverse planes through and 762 mm forward of the reference point.

S5.3.1.2 *Head form impact requirement.* When any contactable surface of the vehicle within the zones specified in S5.3.1.1 is impacted from any direction at 6.7 m/s by the head form described in S6.6, the axial acceleration at the center of gravity of the head form shall be such that the expression

$$\left[\frac{1}{t_1 - t_2}\int_{t_1}^{t_2} a\,dt\right]^{2.5}\left(t_1 - t_2\right)$$

shall not exceed 1,000 where ''a'' is the axial acceleration expressed as a multiple of ''*g*'' (the acceleration due to gravity), and ''$t_1$'' and ''$t_2$'' are any two points in time during the impact.

S5.3.1.3 *Head form force distribution.* When any contactable surface of the vehicle within the zones specified in S5.3.1.1 is impacted from any direction at 6.7 m/s by the head form described in S6.6, the energy necessary to deflect the impacted material shall be not less than 4.5 joules before the force level on the head form exceeds 667 N. When any contactable surface within such zones is impacted by the head form from any direction at 1.5 m/s the contact area on the head form surface shall be not less than 1,935 mm².

* * * * *

S5.3.2.1 The leg protection zones of each vehicle are those parts of the school bus passenger seat backs and restraining barriers bounded by horizontal planes 305 mm above and 102 mm below the seating reference point of the school bus passenger seat immediately behind the seat back or restraining barrier.

S5.3.2.2 When any point on the rear surface of that part of a seat back or restraining barrier within any zone specified in S5.3.2.1 is impacted from any direction at 4.9 m/s by the knee form specified in S6.7, the resisting force of the impacted material shall not exceed 2,669 N and the contact area on the knee form surface shall not be less than 1,935 mm².

* * * * *

S6.3 *Temperature.* The ambient temperature is any level between 0 degrees C and 32 degrees C.

* * * * *

S6.5 *Loading bar.* The loading bar is a rigid cylinder with an outside diameter of 152 mm that has hemispherical ends with radii of 76 mm and with a surface roughness that does not exceed 1.6 µm, root mean square. The length of the loading bar is 102 mm less than the width of the seat back in each test. The stroking mechanism applies force through a pivot attachment at the center point of the loading bar which allows the loading bar to rotate in a horizontal plane 30 degrees in either direction from the transverse position.

S6.5.1 A vertical or lateral force of 17,792 N applied externally through the pivot attachment point of the loading bar at any position reached during a test specified in this standard shall not deflect that point more than 25 mm.

S6.6 *Head form.* The head form for the measurement of acceleration is a rigid surface comprised of two hemispherical shapes, with total equivalent mass of 5.2 kg. The first of the two hemispherical shapes has a diameter of 165 mm. The second of the two hemispherical shapes has a 51 mm diameter and is centered as shown in Figure 3 to protrude from the outer surface of the first hemispherical shape. The surface roughness of the hemispherical shapes does not exceed 1.6 µm, root mean square.

* * * * *

S6.7 *Knee form.* The knee form for measurement of force is a rigid 76 millimeter-diameter cylinder, with an equivalent weight of 44 N that has one hemispherical end with a 38 mm radius forming a contact surface of the knee form. The hemispherical surface roughness does not exceed 1.6 µm, root mean square.

* * * * *

28. In § 571.222, Figure 1, ''Force/Deflection Zone'', Figure 2, ''Body Block for Lap Belt'', and Figure 3 after S6.8 would be revised to read as follows:

BILLING CODE 4910–59–P

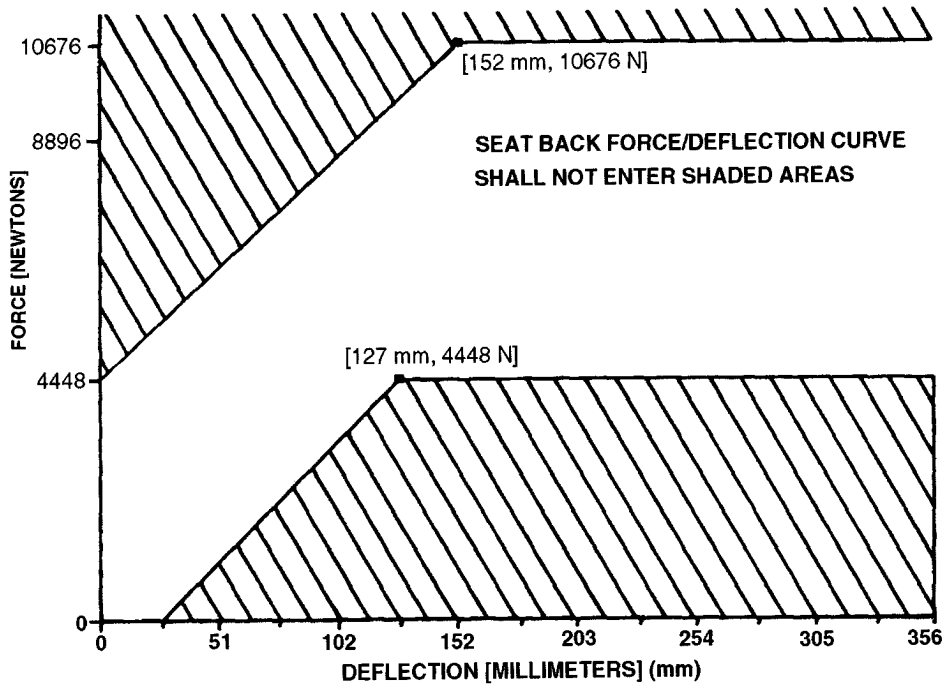


**Figure 1.—Force/Deflection Zone**

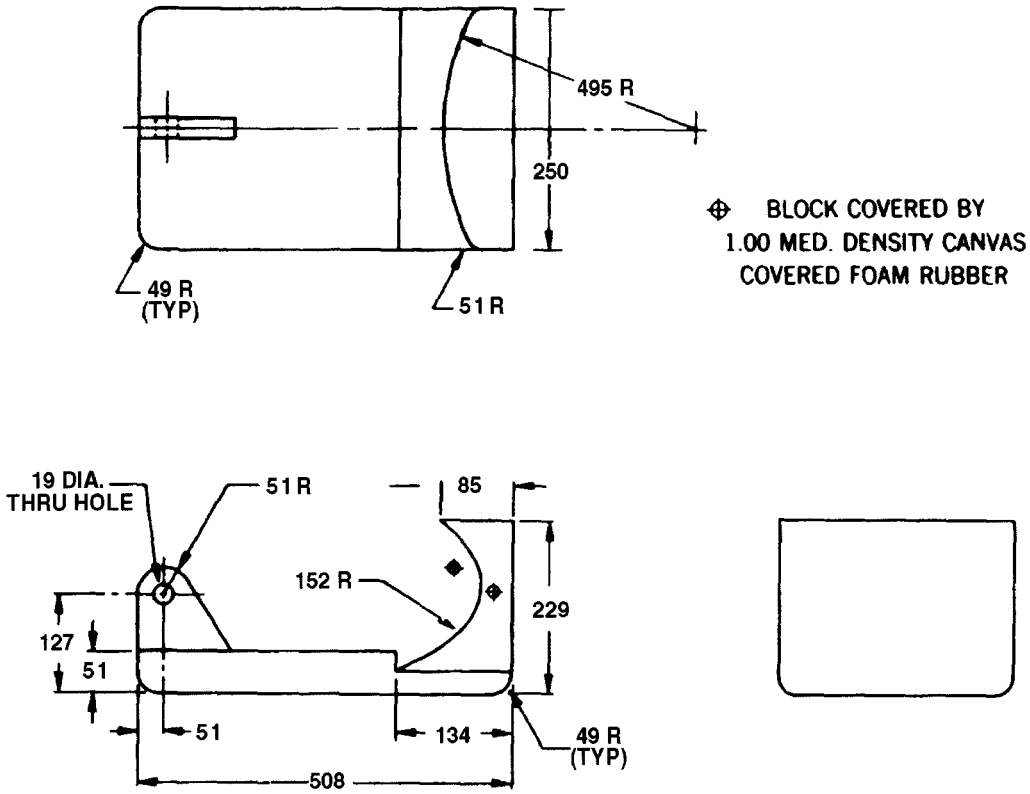


**Figure 2.—Body Block for Lap Belt**
**All dimensions in millimeters (mm)**

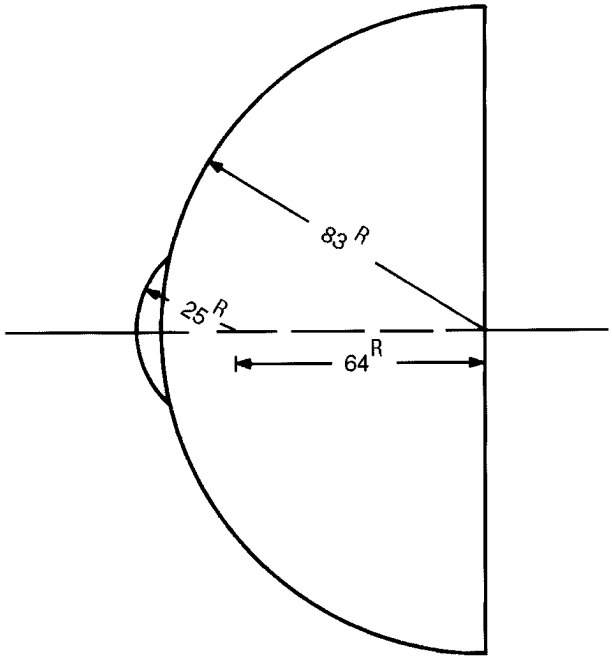


**Figure 3**
**All dimensions in millimeters (mm)**

BILLING CODE 4910–59–C

29. Section 571.301 would be amended by revising S3; revising S5.5; revising S5.6; revising S6; revising S6.1; revising S6.2; revising S6.3; revising S6.5; revising S6.6; revising S7.1.6; revising S7.3; revising S7.5.1; revising S7.5.2; revising S7.5.4; and revising S7.5.5 to read as follows:

**S571.301 Standard No. 301; Fuel system integrity.**

* * * * *

S3. *Application*. This standard applies to passenger cars, and to multipurpose passenger vehicles, trucks and buses that have a GVWR of 4,536 kg or less and use fuel with a boiling point above 0° C, and to school buses that have a GVWR greater than 4,536 kg and use fuel with a boiling point above 0° C.

* * * * *

S5.5 *Fuel spillage; Barrier crash*. Fuel spillage in any fixed or moving barrier crash test shall not exceed 28 g from impact until motion of the vehicle has ceased, and shall not exceed a total of 142 g in the 1-minute period following cessation of motion. For the subsequent 2-minute period, fuel spillage during any 1 minute interval shall not exceed 28 g.

S5.6 *Fuel spillage; rollover*. Fuel spillage in any rollover test, from the onset of rotational motion, shall not exceed a total of 142 g for the first 5 minutes of testing at each successive 90° increment. For the remaining test period, at each increment of 90° fuel spillage during any 1 minute interval shall not exceed 28 g.

* * * * *

S6. *Test requirements*. Each vehicle with a GVWR of 4,536 kg or less shall be capable of meeting the requirements of any applicable barrier crash test followed by a static rollover, without alteration of the vehicle during the test sequence. A particular vehicle need not meet further requirements after having been subjected to a single barrier crash test and a static rollover test.

S6.1 *Frontal barrier crash*. When the vehicle travelling longitudinally forward at any speed up to and including 48 km/h impacts a fixed collision barrier that is perpendicular to the line of travel of the vehicle, or at any angle up to 30° in either direction from the perpendicular to the line of travel of the vehicle, with 50th-percentile test dummies as specified in part 572 of this chapter at each front outboard designated seating position and at any other position whose protection system is required to be tested by a dummy under the provisions of Standard No. 208, under the applicable conditions of S7., fuel spillage shall not exceed the limits of S5.5.

S6.2 *Rear moving barrier crash*. When the vehicle is impacted from the rear by a barrier moving at 48 km/h, with test dummies as specified in part 572 of this chapter at each front outboard designated seating position, under the applicable conditions of S7., fuel spillage shall not exceed the limits of S5.5.

S6.3 *Lateral moving barrier crash*. When the vehicle is impacted laterally on either side by a barrier moving at 32 km/h with 50th-percentile test dummies as specified in part 572 of this chapter at positions required for testing to Standard No. 208, under the applicable conditions of S7., fuel spillage shall not exceed the limits of S5.5.

* * * * *

S6.5 *Moving contoured barrier crash*. When the moving contoured barrier assembly traveling longitudinally forward at any speed up to and including 48 km/h impacts the test vehicle (school bus with a GVWR exceeding 4,536 kg) at any point and angle, under the applicable conditions of S7.1 and S7.5, fuel spillage shall not exceed the limits of S5.5.

S6.6 *Anti-siphoning test for alcohol fuel vehicles*. Each vehicle shall have means that prevent any hose made of vinyl plastic or rubber, with a length of not less than 1200 millimeters (mm) and an outside diameter of not less than 5.2 mm, from contacting the level surface of the liquid fuel in the vehicle's fuel tank or fuel system, when the hose is inserted into the filler neck attached to the fuel tank with the fuel tank filled to any level from 90 to 95 percent of capacity.

* * * * *

S7.1.6 The vehicle, including test devices and instrumentation, is loaded as follows:

(a) Except as specified in S7.1.1, a passenger car is loaded to its unloaded vehicle weight plus its rated cargo and luggage capacity weight, secured in the luggage area, plus the necessary test dummies as specified in S6., restrained only by means that are installed in the vehicle for protection at its seating position.

(b) Except as specified in S7.1.1, a multipurpose passenger vehicle, truck, or bus with a GVWR of 4,536 kg or less is loaded to its unloaded vehicle weight, plus the necessary test dummies, as specified in S6., plus 136 kg or its rated cargo and luggage capacity weight, whichever is less, secured to the vehicle and distributed so that the weight on each axle as measured at the tire-ground interface is proportional to its GAWR. If the weight on any axle, when the vehicle is loaded to unloaded vehicle weight plus dummy weight, exceeds the axle's proportional share of the test weight, the remaining weight shall be placed so that the weight on that axle remains the same. Each dummy shall be restrained only by means that are installed in the vehicle for protection at its seating position.

(c) Except as specified in S7.1.1, a school bus with a GVWR greater than 4,536 kg is loaded to its unloaded vehicle weight, plus 54 kg of unsecured mass at each designated seating position.

* * * * *

S7.3 *Rear moving barrier test conditions*. The rear moving barrier test conditions are those specified in S8.2 of Standard No. 208, 49 CFR 571.208, except for the positioning of the barrier and the vehicle. The barrier and test vehicle are positioned so that at impact—

(a) The vehicle is at rest in its normal attitude;

(b) The barrier is traveling at 48 km/h with its face perpendicular to the longitudinal centerline of the vehicle; and

(c) A vertical plane through the geometric center of the barrier impact surface and perpendicular to that surface coincides with the longitudinal centerline of the vehicle.

* * * * *

S7.5.1 The moving barrier, which is mounted on a carriage as specified in Figure 1, is of rigid construction, symmetrical about a vertical longitudinal plane. The contoured impact surface, which is 629 mm high and 1,981 mm wide, conforms to the dimensions shown in Figure 2, and is attached to the carriage as shown in that figure. The ground clearance to the lower edge of the impact surface is 133 mm ± 13 mm. The wheelbase is 3,048 mm ± 50 mm.

S7.5.2 The moving contoured barrier, including the impact surface, supporting structure, and carriage, has a mass of 1,814.4 kg ± 23 kg with the mass distributed so that 408 kg ± 11 kg is at each rear wheel and 499 kg ± 11 kg is at each front wheel. The center of gravity is located 1,372 mm ± 38 mm rearward of the front wheel axis, in the vertical longitudinal plane of symmetry, 401 mm above the ground. The moment of inertia about the center of gravity is:

$I_x$=367 kgm² ± 18.4 kgm²

$I_z$=4,711 kgm² ± 236 kgm²

* * * * *

S7.5.4 The moving barrier assembly is equipped with G78–15 pneumatic

tires with a tread width of 152 mm ± 25 mm, inflated to 165 kPa.

S7.5.5 The concrete surface upon which the vehicle is tested is level, rigid, and of uniform construction, with a skid number of 75 when measured in accordance with American Society of Testing and Materials Method E: 274–65T at 64 km/h, omitting water delivery as specified in paragraph 7.1 of that method.

* * * * *

30. Section 571.302 would be amended by revising S4.2; revising the text of S4.2.2; revising S4.3; revising S5.1; revising S5.1.1; revising S5.1.2; revising S5.1.3; revising S5.1.4; revising S5.2.1; revising S5.2.3; and revising S5.3 to read as follows:

**§ 571.302, Standard No. 302; Flammability of interior materials.**

* * * * *

S4.2 Any portion of a single or composite material which is within 13 mm of the occupant compartment air space shall meet the requirements of S4.3

* * * * *

S4.2.2 Any material that adheres to other materials at every point of contact shall meet the requirements of S4.3 when tested as a composite with the other material(s).

* * * * *

Material A has a non-adhering interface with material B and is tested separately. Part of material B is within 13 mm of the occupant compartment air space, and materials B and C adhere at every pont of contact; therefore, B and C are tested as a composite. The cut is in material C as shown, to make a specimen 13 mm thick.

S4.3(a) When tested in accordance with S5, material described in S4.1 and S4.2 shall not burn, nor transmit a flame front across its surface, at a rate of more than 102 mm per minute. The requirement concerning transmission of a flame front shall not apply to a surface created by cutting a test specimen for purposes of testing pursuant to S5.

(b) If a material stops burning before it has burned for 60 seconds from the start of timing, and has not burned more than 51 mm from the point where the timing was started, it shall be considered to meet the burn-rate requirement of S4.3(a).

S5.1 *Conditions.*

S5.1.1 The test is conducted in a metal cabinet for protecting the test specimens from drafts. The interior of the cabinet is 381 mm long, 203 mm deep, and 356 mm high. It has a glass observation window in the front, a closable opening to permit insertion of the specimen holder, and a hole to accommodate tubing for a gas burner. For ventilation, it has a 13 mm clearance space around the top of the cabinet, ten holes in the base of the cabinet, each hole 19 mm in diameter and legs to elevate the bottom of the cabinet by 10 mm, all located as shown in Figure 1.

S5.1.2 Prior to testing, each specimen is conditioned for 24 hours at a temperature of 21° C, and a relative humidity of 50 percent, and the test is conducted under those ambient conditions.

S5.1.3 The test specimen is inserted between two matching U-shaped frames of metal stock 25 mm wide and 10 mm high. The interior dimensions of the U-shaped frames are 51 mm wide by 330 mm long. A specimen that softens and bends at the flaming end so as to cause erratic burning is kept horizontal by supports consisting of thin, heat-resistant wires, spanning the width of the U-shaped frame under the specimen at 25 mm intervals. A device that may be used for supporting this type of material is an additional U-shaped frame, wider than the U-shaped frame containing the specimen, spanned by 10-mil wires of heat-resistant composition at 25 mm intervals, inserted over the bottom U-shaped frame.

S5.1.4 A bunsen burner with a tube of 10 mm inside diameter is used. The gas adjusting valve is set to provide a flame, with the tube vertical, of 38 mm in height. The air inlet to the burner is closed.

* * * * *

S5.2 *Preparation of specimens.*

S5.2.1 Each specimen of material to be tested shall be a rectangle 102 mm wide by 356 mm long, wherever possible. The thickness of the specimen is that of the single or composite material used in the vehicle, except that if the material's thickness exceeds 13 mm, the specimen is cut down to that thickness measured from the surface of the specimen closest to the occupant compartment air space. Where it is not possible to obtain a flat specimen because of surface curvature, the specimen is cut to not more than 13 mm in thickness at any point. The maximum available length or width of a specimen is used where either dimension is less than 356 mm or 102 mm, respectively, unless surrogate testing is required under S4.1.1.

* * * * *

S5.2.3 Material with a napped or tufted surface is placed on a flat surface and combed twice against the nap with a comb having seven to eight smooth, rounded teeth per 25 mm.

S5.3 *Procedure.*

(a) Mount the specimen so that both sides and one end are held by the U-shaped frame, and one end is even with the open end of the frame. Where the maximum available width of a specimen is not more than 51 mm, so that the sides of the specimen cannot be held in the U-shaped frame, place the specimen in position on wire supports as described in S5.1.3, with one end held by the closed end of the U-shaped frame.

(b) Place the mounted specimen in a horizontal position, in the center of the cabinet.

(c) With the flame adjusted according to S5.1.4, position the bunsen burner and specimen so that the center of the burner tip is 19 mm below the center of the bottom edge of the open end of the specimen.

(d) Expose the specimen to the flame for 15 seconds.

(e) Begin timing (without reference to the period of application of the burner flame) when the flame from the burning specimen reaches a point 38 mm from the open end of the specimen.

(f) Measure the time that it takes the flame to progress to a point 38 mm from the clamped end of the specimen. If the flame does not reach the specified end point, time its progress to the point where flaming stops.

(g) Calculate the burn rate from the formula:

$$B=60\times(D/T)$$

Where:

B=Burn rate in millimeters per minute

D=Length the flame travels in millimeters, and

T=Time in seconds for the flame to travel D millimeters.

31. In § 571.302, the Figure named ''Illustrative Example -Occupant Compartment Air Space'' at S4.2.2 after the first sentence, and Figure 1, after S5.1.1 would be revised to read as follows:

BILLING CODE 4910–59–P

Illustrative Example

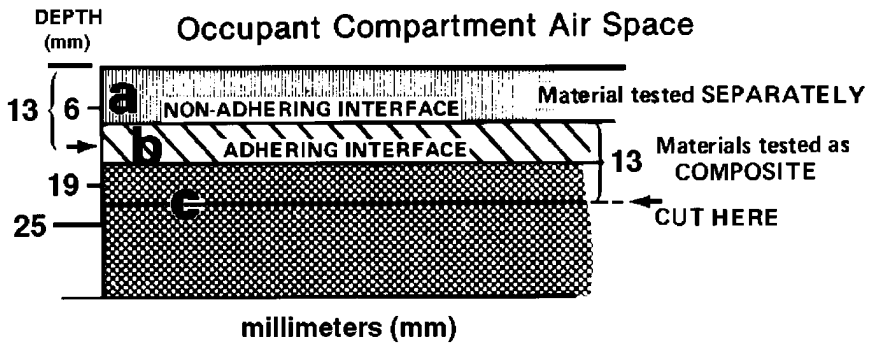


**Occupant Compartment Air Space**
**All dimensions in millimeters (mm)**

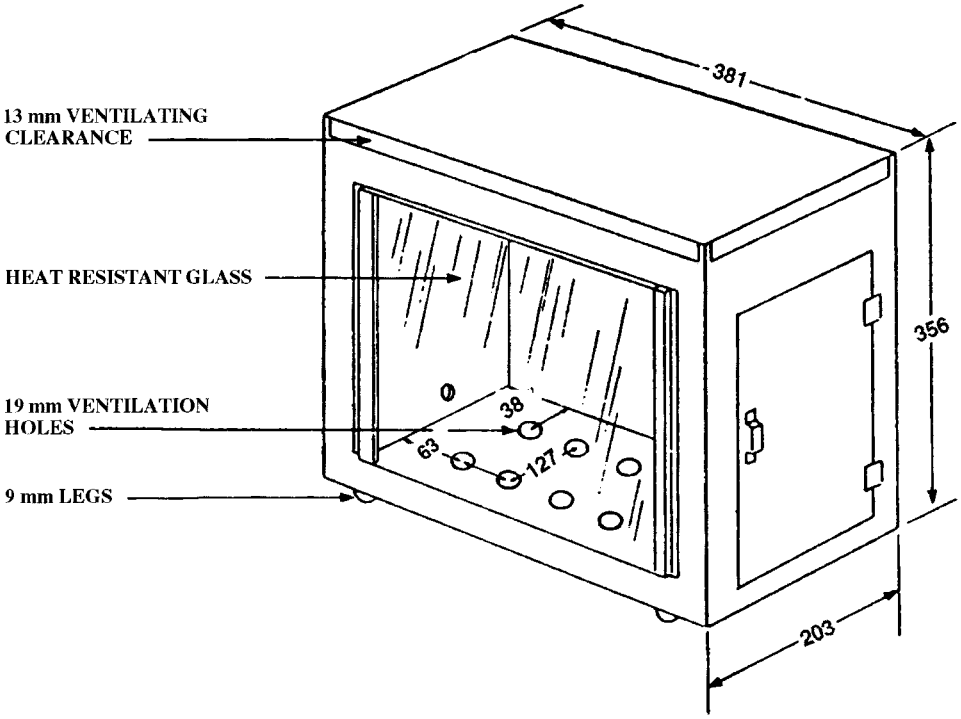


**Figure 1**
**All dimensions in millimeters (mm)**

BILLING CODE 4910–59—C

Issued on: April 2, 1997.

**L. Robert Shelton,**

*Associate Administrator for Safety Performance Standards.*

[FR Doc. 97–9153 Filed 4–18–97; 8:45 am]

BILLING CODE 4910–59–P

## DEPARTMENT OF COMMERCE

## National Oceanic and Atmospheric Administration

## 50 CFR Part 630

**[Docket No. 970401075–7075–01; I.D. 121296A]**

**RIN 0648–AJ69**

## Atlantic Highly Migratory Species Fisheries; Atlantic Bluefin Tuna Quota Specifications

**AGENCY:** National Marine Fisheries Service (NMFS), National Oceanic and Atmospheric Administration (NOAA), Commerce.

**ACTION:** Proposed quota specifications; public hearings; request for comments.

**SUMMARY:** NMFS issues proposed specifications to set Atlantic bluefin tuna (ABT) fishing category quotas for the 1997 fishing year. The proposed specifications are necessary to implement the 1996 recommendation of the International Commission for the Conservation of Atlantic Tunas (ICCAT) regarding fishing quotas for bluefin tuna, as required by the Atlantic Tunas Convention Act (ATCA), and to achieve domestic management objectives. NMFS will hold public hearings to receive comments from fishery participants and other members of the public regarding these proposed specifications.

**DATES:** Comments are invited and must be received on or before May 16, 1997. See **SUPPLEMENTARY INFORMATION** for dates and times of public hearings.

**ADDRESSES:** Comments on the proposed specifications should be sent to, and copies of supporting documents, including a Draft Environmental Assessment-Regulatory Impact Review (EA/RIR), are available from, Rebecca Lent, Chief, Highly Migratory Species Management Division, Office of Sustainable Fisheries (F/SF1), NMFS, 1315 East-West Highway, Silver Spring, MD 20910–3282. See **SUPPLEMENTARY INFORMATION** for locations of public hearings.

**FOR FURTHER INFORMATION CONTACT:** John Kelly, 301–713–2347, or Mark Murray-Brown, 508–281–9260.

**SUPPLEMENTARY INFORMATION:** The Atlantic tuna fisheries are managed under the authority of ATCA. ATCA authorizes the Secretary of Commerce (Secretary) to issue regulations as may be necessary to carry out the recommendations of ICCAT. The authority to carry out ICCAT recommendations has been delegated from the Secretary to the Assistant Administrator for Fisheries, NOAA (AA).

Based on a revised stock assessment, parties at the 1996 meeting of ICCAT adopted a recommendation to increase the annual scientific monitoring quota of ABT in the western Atlantic Ocean from 2,200 metric tons (mt) to 2,354 mt. The share allocated to the United States was increased from 1306 mt to 1,344 mt and applies each year for the 1997 and 1998 fishing years. These proposed specifications would implement that quota recommendation and allocate the total among the several established fishing categories. While the ICCAT recommendation refers to adjustments to the 1998 quotas based on underharvest or overharvest in 1997, there is no provision for such adjustments from the 1996 fishing year. Therefore, these proposed specifications for 1997 which appear as an attachment to this document do not include any adjustments relative to landings in 1996.

### Relation to Proposed Consolidation

A proposed rule to consolidate all the Atlantic highly migratory species regulations was published by NMFS on November 6, 1996, in the **Federal Register** at 61 FR 57361. That proposed rule would significantly reorganize and condense regulatory text regarding the Atlantic tuna fisheries. In particular, regulations governing the Atlantic tuna fisheries, currently found at 50 CFR part 285, were proposed to be combined with other regulations governing highly migratory species under 50 CFR part 630. The quotas contained in these proposed specifications have been written to be consistent with the previously proposed consolidation.

Additionally, under the consolidation, regulatory text regarding annual quotas for ABT was proposed to be eliminated and replaced by annual quota specifications to be published in the **Federal Register**. Under the proposed new procedures, NMFS would issue proposed quota specifications and applicable supporting analyses (EA/RIR, Initial Regulatory Flexibility Analysis (IRFA)), provide for a public comment period, and issue final quota specifications. These proposed ABT quota specifications for 1997 are drafted in a format to enable the public to place these changes in the context of the proposed consolidated regulations under part 630. Copies of the proposed consolidation rule may be obtained by writing (see **ADDRESSES**) or calling the contact person (see **FOR FURTHER INFORMATION CONTACT**).

### Relation to Advance Notice of Proposed Rulemaking (ANPR)

These proposed specifications address in part comments submitted to NMFS in response to an ANPR (61 FR 48876, September 17, 1996). In the ANPR, NMFS requested comment on measures necessary to implement quota modifications and/or any other management recommendations for Atlantic tunas following the 1996 meeting of ICCAT. As stated in the ANPR, NMFS is required under ATCA to establish ABT quotas consistent with the recommendations of ICCAT. Under this legislative requirement, allocation of the U.S. ABT quota has been designed to collect the scientific information necessary to monitor the status of the ABT resource and, consistent with this, to achieve an equitable distribution of fishing opportunities to all fishing categories and all geographic areas.

The ANPR established a 30-day comment period during which NMFS received numerous comments on quota allocations. NMFS received 141 comments that the amount of quota allocated to the handgear categories should be increased substantially, given recent estimates of bluefin biomass. Some commenters requested that NMFS substantially reduce, and ultimately eliminate, the Purse Seine quota. A few individuals commented that the Charter/Headboat and Angling category quotas should reflect the economic benefits of those recreational fisheries.

In addition to comments submitted in response to the ANPR, NMFS has received a petition for rulemaking regarding Atlantic bluefin tuna quotas. The petitioner requested that NMFS reallocate the domestic quota in a manner that reduces the Purse Seine category quota to the proportion established prior to the 1983 reallocation and increases the combined quotas of the General and Angling categories by the same amount. NMFS requests comment on the merits and impacts of this petition for rulemaking. Copies of the petition are available from NMFS (see **ADDRESSES**).

### Proposed Fishing Category Quotas

In the 1992 final rule (57 FR 32905, July 24, 1992), NMFS established quotas for the various commercial and recreational categories in the ABT fishery, based upon the historical share of catch in each of these categories

during the period 1983 through 1991 (see table). These base quotas were modified in 1995 by an increase of 76 mt to the overall U.S. quota at ICCAT and by reducing the Purse Seine category quota to 250 mt. Both the overall quota increase and the purse seine transfer were added to the Reserve, resulting in a total Reserve of 145 mt. The 1995 adjusted base quotas have been used as a reference point for the 1997 quota specifications proposed here.

The total 1997 quota allocated by ICCAT to the United States is 1,344 mt, a 33 mt increase over 1996. NMFS proposes to modify quotas by gear category and the Reserve to achieve a geographic and temporal distribution of fishing effort and catch that reflects the scientific monitoring nature of the quota. While NMFS has attempted to allocate the U.S. quota consistent with maintaining the traditional user groups and taking into account recent trends in fishing fleet activity, these socio-economic concerns are secondary to the collection of scientific data for the purposes of stock assessment.

The proposed specifications would set the Reserve at 33 mt, would maintain the Purse Seine category quota at 250 mt, would maintain the Incidental quota at 110 mt, would increase the General category quota from 531 mt to 633 mt, would maintain the Harpoon category quota at 53 mt, and would increase the Angling category quota from 222 mt to 265 mt.

*Reserve Category*

The Reserve category was established to ensure that the annual U.S. quota allocated by ICCAT is not exceeded. Since there is a lag time in reporting catches and landings of ABT in all commercial and recreational fishing categories, there is some uncertainty in real-time harvest estimates. In addition, some reasonable advance notice of closure is required, and weather conditions can affect the level of fishing effort prior to the announced closing date. All these factors lead to uncertainty in forecasting fishery closures, thus allocations from the Reserve are made to cover potential overharvest or to allow fishing to continue in a category for the collection of scientific data.

The 33 mt increase from ICCAT for calendar year 1997 would be placed in the Reserve. Given the existing measures for quota monitoring of all categories and the additional measures that will be implemented in 1997 for Angling category quota monitoring, it is not necessary to maintain as much tonnage in the Reserve as had been established in 1995 (145 mt). NMFS plans to implement a FAX/OCR system for commercial dealer reporting and has proposed direct reporting by recreational anglers (62 FR 9726, March 4, 1997). Additionally, NMFS has proposed changes to the Atlantic Tunas Permit Program that should improve information collection through dockside and telephone surveys. Consequently, NMFS believes that a 33 mt Reserve is adequate to ensure that the overall quota is not exceeded.

*Purse Seine Category*

The Purse Seine category has been managed as a limited entry fishery of five vessels since 1982. Each vessel is annually allocated an equal share of the category quota, which may be harvested or traded to another authorized purse seine vessel. In contrast to the handgear fisheries, the Purse Seine category is the only ABT fishing category that has not been subject to increased participation and premature closure in recent years.

NMFS has received numerous comments that the limited entry Purse Seine category is allocated an inordinate share of the national quota and that the allocation restricts fishing opportunities for other fishermen. Many individuals have requested that the purse seine quota be reduced and redistributed to the handgear fisheries. In recent years, NMFS has reallocated some of the purse seine quota to try to collect scientific information, particularly catch-per-unit effort, over the broadest geographic and temporal range as possible.

NMFS is specifically seeking comment on the issue of reallocation of the purse seine quota. Further, NMFS has decided that reallocation issues warrant further consideration by the Atlantic Tunas Advisory Panel (AP) to be created as required under the Magnuson-Stevens Fishery Conservation and Management Act. The AP, required by law to be of balanced representation, would consider comments submitted under these proposed specifications and will discuss reallocation schemes and provide additional opportunities for public comment. For this reason, NMFS proposes to utilize the AP for further discussion and recommendations to the agency, and proposes no immediate change to the Purse Seine category quota.

*General and Angling Categories*

Participation in the General and Angling categories has increased markedly in recent years and has resulted in early closures for these categories. Because of the reliance on the large fish and small fish catch-per-unit-effort (CPUE) indices for stock assessment, the General and Angling category fisheries should be kept open as long as possible to achieve high survey sampling rates over the widest possible geographic area and temporal range.

Also, in response to recommendations from the National Research Council, NMFS has increased scientific sampling of ABT, working with outside organizations in conducting genetic studies, microconstituent analysis, sexual maturity determination, tagging studies, and age and growth studies.

Given the need to improve data collection, NMFS proposes to reallocate the 145 mt that had been in the 1995 Reserve to the Angling and General categories in proportion to the 1995 base quotas established for the two categories. In 1995, a total of 753 mt was allocated to the two categories: 222 mt (29.5 percent) for Angling and 531 mt (70.5 percent) for General. Allocating the 145 mt on the basis of these proportions would increase the Angling category by 43 mt and the General category by 102 mt.

The proposed increase in allocation to the Angling category would be used partially to cover harvest that has occurred during the collection of additional scientific information on the winter fishery in North Carolina. Approximately 150 archival tags have been surgically implanted in bluefin tuna in order to gather data to address movement as part of the exchange rate between the east and west Atlantic populations. ICCAT has stated in the 1996 session of the Commission that large numbers of archival tagged fish would be necessary to resolve the mixing question relative to the Mediterranean and Gulf of Mexico spawning stocks.

Additional Angling category quota is also needed to account for collection of data relating to the use of circle hooks and discard mortality and the use of conventional tags to assess maturation rates for ABT of all sizes throughout their geographic range. The concentration of bluefin tuna in the Cape Hatteras area and the high catch rate makes this an ideal location for these scientific programs.

The winter ABT fishery, while predominantly a catch-and-release fishery for giant fish, also resulted in considerable harvest of small medium fish in 1996 and 1997. While NMFS recognizes the value of scientific data collection from this uniquely high catch rate fishery, restrictive management measures are needed to ensure that scientific data collection and fishing opportunities in northern areas are not

adversely impacted. For these reasons, NMFS lowered the landing allowance for the winter fishery to one per vessel per day and issued a final rule (62 FR 8634, February 26, 1997) to allow for interim closures of the Angling category while the ABT migrate to other areas. Apart from these measures, however, additional allocation is needed because the summer and fall ABT fisheries have traditionally harvested the full amount allocated.

Under the ABT stock recovery program, ICCAT has recommended that the United States limit catch of school bluefin tuna to 8 percent of the national quota. NMFS proposes the maximum permissible tonnage under the 8 percent ICCAT limit (108 mt) to allow for increased biological sampling of school bluefin. A large number of muscle, heart, otolith, and vertebrae samples are needed to continue with genetic and microconstituent analyses. These biological materials are to be obtained through dockside sampling of angler catches during the summertime recreational fishery. Broad-based sampling of young fish will help resolve important issues relative to stock structure and spawning site fidelity.

NMFS also proposes to increase the Angling category trophy class (large medium and giant ABT) from 3 mt to 6 mt. Most of the fish implanted with archival tags are in these size classes. Increasing fishing opportunities in the trophy class and establishing northern and southern area subquotas should improve chances for archival tag recovery.

For the reasons indicated, the Angling category quota would be increased from 222 mt to 265 mt. In addition to the total quota change, NMFS has previously proposed to increase the geographical and seasonal scope of data collection by subdividing the Angling category quota (62 FR 9726, March 4, 1997). Consistent with that proposal, and the ICCAT limitation on catch of school bluefin tuna, the 265 mt would be subdivided as follows: School bluefin—108 mt, with 57 mt to the northern area (New Jersey and north) and 51 mt to the southern area (Delaware and south); large school/small medium bluefin—151 mt, with 80 mt to the northern area and 71 mt to the southern area; large medium/giant bluefin—6 mt, with 2 mt to the northern area and 4 mt to the southern area.

NMFS has previously implemented measures to address broadening the fishing opportunities and scientific data collection for the General category. These measures have included monthly quotas and restricted-fishing days. Despite these measures, and new measures previously proposed for 1997 (62 FR 9726, March 4, 1997), NMFS recognizes that additional quota is needed to balance the increased participation in this fishery with the need for broad-based data collection. NMFS therefore proposes to increase the General category to 633 mt. NMFS will consider subdivision of this total General category quota on a seasonal or geographic basis, and possible effort controls, in a separate action.

*Harpoon Category*

Although comments have been received indicating that catch rates and effort have increased in the Harpoon category, the data obtained from this fishery have not been as useful as other data in performing stock assessments. Due to the nature of the fishery, it is difficult to standardize CPUE. Thus far, harpoon catch data have not been incorporated into any useful index of abundance. Therefore, NMFS proposes that the 1997 quota remain at 53 mt for the Harpoon category.

*Incidental Category*

The Incidental category was established to reduce waste in recognized situations of ABT bycatch. At the time that the ABT scientific monitoring quota was established by ICCAT, there was no directed longline fishery for bluefin tuna by U.S. vessels. However, incidental catch of bluefin tuna by vessels in the swordfish, shark, bigeye tuna, and yellowfin tuna fisheries was well documented. In addition, limited bycatch was known to occur in pound nets, traps, gillnets and non-tuna purse seine fisheries. Failure to include these catches in the U.S. quota would have led to wasteful discards and ABT fishing mortality over and above that which would occur in the directed handgear and purse seine fisheries.

NMFS has previously established target catch requirements for the Incidental category to reduce incentives for targeting bluefin tuna with these types of fishing gear. As prices for ABT increased in the mid-1980s, it became necessary to implement trips limits and revise the target catch requirements to ensure that catch of ABT remained as an incidental occurrence in the traditional directed fisheries. In recent years, these landings restrictions have led to situations in which the incidental catch quota has not been met, yet substantial discards are being recorded and reported to ICCAT. The United States reported to ICCAT that longline discards averaged 125 mt a year from 1991 to 1995.

Because of the high level of reported discards, and the increased ABT mortality that results when quota not landed against the Incidental category is reallocated to other directed fishing categories, ICCAT recommended that the U.S. take measures in 1997 to decrease discards of ABT. NMFS is currently analyzing observer reports, vessel logs, and dealer reports to more fully assess ABT interaction rates, patterns of fishing activity, and economic factors in all ABT fishing categories. Once all available data are analyzed, NMFS plans to propose measures to reduce ABT discards in a separate rulemaking.

For these reasons, NMFS proposes that the Incidental category quota remain at the 1995 base level. The total quota of 110 mt would be allocated as follows: 86 mt to longline vessels operating south of 34 degrees N. Lat.; 23 mt to longline vessels operating north of 34 degrees N. Lat.; and 1 mt to fishermen using traps, fixed gear, and purse seines in the non-tuna fisheries. Pending the results of the analysis on discards, these quotas could be adjusted by allocations from the Reserve, if necessary, to conform to future management measures designed to reduce ABT discards in this fishing category.

Dates, Times, and Locations of Public Hearings

The public hearing schedule is as follows:

Tuesday, April 22, 1997, Silver Spring, MD, 2–5 p.m.
NOAA/NMFS, 1315 East-West Highway, Room 4527, Silver Spring, MD 20910

Tuesday, April 29, 1997, Gloucester, MA, 7–10 p.m.
Milton Fuller School, 4 School House Road, Gloucester, MA 01930

Wednesday, April 30, 1997, Brunswick, ME, 7–10 p.m.
Atrium Inn and Conference Center, Cooks Corner, Brunswick, ME 23502

Wednesday, April 30, 1997, Islip, NY, 7–10 p.m.
Holiday Inn, 3845 Veterans Memorial Highway, Ronkonkoma, NY 11779

Thursday, May 1, 1997, Manteo, NC, 7–10 p.m.
North Carolina Aquarium, Airport Road, Manteo, NC 27954

Friday, May 2, 1997, Ocean City, MD, 7–10 p.m.
City Hall, 3rd Street & Baltimore Avenue, Ocean City, MD 21842

Wednesday, May 7, 1997, Toms River, NJ, 7–10 p.m.
Holiday Inn, 290 State Highway 37 East, Toms River, NJ 08753

Wednesday, May 7, 1997, St. Petersburg, FL, 7–9 p.m.
NMFS Southeast Regional Office, 9721 Executive Center Drive, North, St. Petersburg, FL 33702
Thursday, May 8, 1997, Plymouth, MA, 7–10 p.m.
Plymouth North High School, Obery Street, Plymouth, MA 02360

**Classification**

These proposed quota specifications are published under the authority of the ATCA, 16 U.S.C. 971 *et seq.* Preliminarily, the AA has determined that the regulations contained in these proposed specifications are necessary to implement the recommendations of ICCAT and are necessary for management of the Atlantic tuna fisheries.

NMFS prepared a draft EA for these proposed specifications with a preliminary finding of no significant impact on the human environment. In addition, a draft RIR was prepared with a preliminary finding of no significant impact. The Assistant General Counsel for Legislation and Regulation of the Department of Commerce has certified to the Chief Counsel for Advocacy of the Small Business Administration that the proposed specifications, if implemented, would not have a significant economic impact on a substantial number of small entities as follows:

The proposed specifications would allocate the Total Allowable Catch (TAC) for the Atlantic bluefin tuna fishery in accordance with the recommendations of the International Commission for the Conservation of Atlantic Tunas (ICCAT) and domestic fishery management objectives. For all fishing categories, quotas are proposed at levels similar to or slightly higher than prior years. Because the overall bluefin tuna quota has increased, additional revenues will accrue to many small businesses.

Because of this certification, an IRFA was not prepared.

These proposed specifications have been determined to be not significant for purposes of E.O. 12866.

NMFS reinitiated consultation on the Atlantic tuna fishery under Section 7 of the Endangered Species Act on September 25, 1996. This consultation will consider new information concerning the status of the northern right whale. NMFS has determined that proceeding with this rule, pending completion of that consultation, will not result in any irreversible and irretrievable commitment of resources that would have the effect of foreclosing the formulation or implementation of any reasonable and prudent alternative measures. This proposed rule would implement quotas similar to prior years, making minor allocation changes. Therefore, the proposed rule is not expected to increase endangered species or marine mammal interaction rates.

Dated: April 15, 1997.

**Nancy Foster,**

*Acting Assistant Administrator for Fisheries, National Marine Fisheries Service.*

ATTACHMENT—PROPOSED ABT QUOTAS BY FISHING CATEGORY

| | 1992 Base quota | 1995 Base quota [d] | Proposed 1997 quota |
|---|---|---|---|
| General | 531 | 531 | 633 |
| Harpoon | 53 | 53 | 53 |
| Incidental | 113 | 110 | 110 |
| Other | 4 | 1 | 1 |
| Longline | 109 | 109 | 109 |
| North | 23 | 23 | 23 |
| South | 86 | 86 | 86 |
| Purse Seine | [a] 301 | 250 | 250 |
| Angling | 219 | 222 | 265 |
| School [b] | 100 | 100 | 108 |
| North | 53 | 53 | 57 |
| South | 47 | 47 | 51 |
| Large School/Small Medium | 119 | 119 | 151 |
| North | ..... | ..... | 80 |
| South | ..... | ..... | 71 |
| Trophy [c] | ..... | 3 | 6 |
| North | ..... | ..... | 2 |
| South | ..... | ..... | 4 |
| Reserve | 31 | 145 | 33 |
| Total | 1248 | 1311 | 1344 |

[a] The 1992 base quota of 301 mt was reduced to 250 mt in 1995.
[b] ICCAT recommendation limits school size class subquota to 8% of U.S. allocation.
[c] Trophy quota category first established in 1995. In prior years, large medium and giant ABT landed by Angling and Charter/Headboat vessels were counted against Incidental-Other gear category.
[d] Actual 1995 quotas included adjustments to base due to overharvest/underharvest from 1994.

[FR Doc. 97–10220 Filed 4–16–97; 2:44 pm]

BILLING CODE 3510–22–P

# Notices

Federal Register
Vol. 62, No. 76
Monday, April 21, 1997

This section of the FEDERAL REGISTER contains documents other than rules or proposed rules that are applicable to the public. Notices of hearings and investigations, committee meetings, agency decisions and rulings, delegations of authority, filing of petitions and applications and agency statements of organization and functions are examples of documents appearing in this section.

## DEPARTMENT OF AGRICULTURE

### Submission for OMB Review; Comment Request

April 11, 1997.

The Department of Agriculture has submitted the following information collection requirement(s) to OMB for review and clearance under the Paperwork Reduction Act of 1995, Public Law 104–13. Comments regarding (a) Whether the collection of information is necessary for the proper performance of the functions of the agency, including whether the information will have practical utility; (b) the accuracy of the agency's estimate of burden including the validity of the methodology and assumptions used; (c) ways to enhance the quality, utility and clarity of the information to be collected; (d) ways to minimize the burden of the collection of information on those who are to respond, including through the use of appropriate automated, electronic, mechanical, or other technological collection techniques or other forms of information technology should be addressed to: Desk Officer for Agriculture, Office of Information and Regulatory Affairs, Office of Management and Budget (OMB), Washington, DC 20503 *and* to Department Clearance Office, USDA, OCIO, Mail Stop 7602, Washington, DC 20250–7602. Comments regarding these information collections are best assured of having their full effect if received within 30 days of this notification. Copies of the submission(s) may be obtained by calling (202) 720–6204 or (202) 720–6746.

An agency may not conduct or sponsor a collection of information unless the collection of information displays a currently valid OMB control number and the agency informs potential persons who are to respond to the collection of information that such persons are not required to respond to the collection of information unless it displays a currently valid OMB control number.

- **Rural Utilities Service**

*Title:* Distance Learning and Telemedicine Loan and Grant Program (7 CFR 1703, Subpart D).

*OMB Control Number:* 0572–0096.

*Summary:* The program provides grants to rural community facilities such as schools, hospitals, and medical centers; to encourage, improve, and make affordable. The use of advanced telecommunications and computer networks to provide educational and medical benefits to people living in rural areas.

*Need and Use of the Information:* This information is required in order to determine eligibility; specific purpose for which grant will be used; project feasibility; need for improved educational or medical facility, etc.

*Description of Respondents:* Business or other for-profit.

*Number of Respondents:* 300.

*Frequency of Responses:* Recordkeeping; Reporting: On occasion.

*Total Burden Hours:* 18,998.

- **Agricultural Marketing Service**

*Title:* Tart Cherries Grown in the States of Michigan, New York, Pennsylvania, Oregon, Utah, Washington, and Wisconsin.

*OMB Control Number:* 0581–0177.

*Summary:* The USDA needs information from growers to select committee numbers, to conduct referenda, and to amend the marketing order and agreement.

*Need and Use of the Information:* The information is used to regulate the provisions of Marketing Order No. 930.

*Description of Respondents:* Business or other for-profit; Farms.

*Number of Respondents:* 1,268.

*Frequency of Responses:* Reporting: On occasion.

*Total Burden Hours:* 990.

**Donald Hulcher,**

*Departmental Clearance Officer.*

[FR Doc. 97–10165 Filed 4–18–97; 8:45 am]

BILLING CODE 3410–01–M

## DEPARTMENT OF AGRICULTURE

### Office of the Chief Information Officer; Granting of Federal Information Processing Standards (FIPS) Waiver for Digital Signature Standard

**AGENCY:** Office of the Chief Information Officer, United States Department of Agriculture (USDA).

**ACTION:** Notice of granting of FIPS waiver request.

**SUMMARY:** The Chief Information Officer has granted a waiver to the Agricultural Marketing Service to use Rivest, Shamir, and Adleman (RSA) digital signature technology in lieu of the Digital Signature Standard (DSS) specified by the Federal Information Processing Standard (FIPS) 186. This waiver was made pursuant to section 111(d) of the Federal Property and Administrative Services Act of 1949 as amended by the Computer Security Act of 1987, Public Law 100–235. The Waiver does not apply to any procurement, but allows use of a capability already available in the agency.

**DATES:** The waiver takes effect on (date of April 10, 1997) and remains valid for the life of the core software and subject to the demands of the USDA Information System Technology Architecture.

**FOR FURTHER INFORMATION CONTACT:** Joseph Ware, Chief, Information Management Division, Office of the Chief Information Officer, USDA, 202–690–2118.

**SUPPLEMENTARY INFORMATION:** Federal Information Processing Standard (FIPS) 186, ''Digital Signature Standard,'' establishes a standard for generating a digital signature that can be used to verify that electronic documents originated with the signatory of the document, and to protect the entire document against unauthorized modifications of its text. FIPS 186 allows Federal agency heads to waive use of the FIPS 186 under certain circumstances.

A waiver may be granted if compliance with the standard would adversely affect the accomplishment of the mission of an operator of a Federal computer system.

A waiver may also be granted if compliance with the standard would cause a major adverse financial impact on the operator of a Federal computer

system which is not offset by Government-wide savings.

The Chief Information Officer has granted a waiver to Agricultural Marketing Service to employ the RSA digital signature algorithm instead of one conforming to FIPS 186 DSS. The RSA algorithm provides document security that is at least comparable to that specified by FIPS 186 DSS. Unlike the DSS, the algorithm is widely used in a variety of commercial software applications, making development of applications to generate secure USDA documents feasible and cost-effective. Use of DSS would cause major adverse financial impact on the agency, and therefore on its fee-paying customers, because the cost of developing new software employing DSS would be many times the cost of using existing commercial software that employs the RSA algorithm. In accordance with the requirements of FIPS 186, notice of this waiver has been sent to the National Institute of Standards and Technology, United States Department of Commerce; to the Committee on Government Reform and Oversight of the House of Representatives; and to the Committee on Governmental Affairs of the United States Senate.

**Anne F. Thomson Reed,**

*Acting Chief Information Officer.*

[FR Doc. 97–10162 Filed 4–18–97; 8:45 am]

BILLING CODE 3410–01–M

## DEPARTMENT OF AGRICULTURE

### Agricultural Marketing Service

**[FV–96–701]**

### Fresh Cut Flowers and Fresh Cut Greens Promotion and Information Order; Referendum Order

**AGENCY:** Agricultural Marketing Service, USDA

**ACTION:** Notice; Referendum order.

**SUMMARY:** This document gives notice that a referendum will be conducted to determine whether qualified handlers of fresh cut flowers and greens favor the continuation of the Fresh Cut Flowers and Fresh Cut Greens Promotion and Information Order (Order). The Order must be favored by a simple majority of the qualified handlers voting in the referendum. This action establishes the voting period, representative period, method of voting, and agents.

**DATES:** The referendum will be conducted by mail ballot from June 2 through June 20, 1997. The representative period for establishing voter eligibility shall be the period from January 1, 1996, through December 31, 1996.

**ADDRESSES:** Copies of the Fresh Cut Flowers and Fresh Cut Greens Promotion and Information Order may be obtained from: Referendum Agent, Research and Promotion Branch, Fruit and Vegetable Division, AMS, USDA, P.O. Box 96456, Room 2535-S, Washington, DC 20090–6456, fax (202) 205–2800.

**FOR FURTHER INFORMATION CONTACT:** Sonia N. Jimenez, Research and Promotion Branch, Fruit and Vegetable Division, AMS, USDA, P.O. Box 96456, Room 2535–S, Washington, DC 20090–6456, telephone (202) 720–9916 or (888) 720–9917.

**SUPPLEMENTARY INFORMATION:** A referendum will be conducted among qualified handlers of fresh cut flowers and greens to determine whether the continuance of the Fresh Cut Flowers and Fresh Cut Greens Promotion and Information Order (Order) (7 CFR Part 1208) is favored by persons voting in the referendum. The Order is authorized under the Fresh Cut Flowers and Fresh Cut Greens Promotion and Information Act (Act) (7 U.S.C. 6801–6814).

The representative period for establishing voter eligibility for the referendum shall be the period from January 1, 1996, through December 31, 1996. Only those wholesale handlers (including, but not limited to, wholesale jobbers, bouquet and floral article manufacturers, auction houses that clear the sale of cut flowers and greens, and retail distribution centers), producers, and importers who have annual sales of $750,000 or more of fresh cut flowers and greens and who sell those products to exempt handlers, retailers, or consumers are considered qualified handlers and are eligible to vote in the referendum. Persons who have received an exemption from assessment for the entire representative period are ineligible to vote. The referendum shall be conducted by mail ballot from June 2 through 20, 1997.

Section 7 of the Act provides that the Secretary of Agriculture (Secretary) shall conduct a referendum not later than 3 years after the issuance of an order to ascertain whether the order then in effect shall be continued. The Order was issued on December 29, 1994. Paragraph (a)(2) of Section 7 of the Act requires that the Order be approved by a simple majority of all votes cast in the referendum. In addition, paragraph (b) of Section 7 of the Act specifies that each qualified handler eligible to vote in the referendum shall be entitled to cast one vote for each separate facility of the person that is an eligible separate facility. Eligible separate facility is defined in paragraph (b)(2) of Section 7 of the Act as a handling or marketing facility of a qualified handler that is physically located away from other facilities of the qualified handler or that the business function of the separate facility is substantially different from the functions of other facilities owned or operated by the qualified handler and the annual sales of cut flowers and cut greens to retailers and exempt handlers from the facility are $750,000 or more annually. The Order shall continue in effect if it is approved by a simple majority of qualified handlers voting in the referendum. If the Secretary determines that the Order has not been approved by a simple majority of all votes in the referendum, or the Secretary determines that suspension or termination of the Order is favored by a simple majority of all votes cast in the referendum, the Secretary shall terminate or suspend the collection of assessments under the Order and suspend or terminate activities under the Order as soon as practicable.

In accordance with the Paperwork Reduction Act of 1995 [Pub. L. 104–13], the referendum ballot has been approved by the Office of Management and Budget (OMB) and has been assigned OMB number 0581–0093. There are approximately 692 eligible voters representing approximately 923 votes, some of which represent separate facilities. It will take an average of 15 minutes for each voter to read the voting instructions and complete the referendum ballot. The total burden on the total number of voters will be 77 hours.

### Referendum Order

It is hereby directed that a referendum be conducted among qualified handlers to determine whether they favor the continuance of the Order. The representative period for establishing voter eligibility for the referendum shall be the period from January 1, 1996, through December 31, 1996. A referendum shall be conducted by mail ballot from June 2 through 20, 1997.

Section 7 of the Act provides that the Secretary of Agriculture (Secretary) shall conduct a referendum not later than 3 years after the issuance of an order to ascertain whether the order then in effect shall be continued. The Order shall be continued only if approved by a simple majority of all votes cast in the referendum.

Referendum procedures were published in the **Federal Register** on April 14, 1997 [62 FR 18033]. The Procedure for the Conduct of Referenda in Connection with the Fresh Cut

Flowers and Fresh Cut Greens Promotion and Information Order [7 CFR 1208.200–1208.207] shall be used to conduct the referendum. Ballots will be mailed to all known qualified handlers on or before June 2, 1997. Eligible voters who do not receive a ballot by mail may call the following toll-free telephone number to receive a ballot: 1 (888) 720–9917. All ballots will be subject to verification. Ballots must be received by the referendum agents no later than June 20, 1997, to be counted.

Sonia N. Jimenez and Martha B. Ransom, Research and Promotion Branch, Fruit and Vegetable Division, Agricultural Marketing Service, U.S. Department of Agriculture, Room 2535–S, P.O. Box 96456, Washington, DC 20090–6456, are designated as the referendum agents of the Secretary of Agriculture to conduct the referendum.

Ballots to be cast in the referendum, and any related material relevant to the referendum, will be mailed by the referendum agents to all known qualified handlers. Qualified handlers, as defined in the Order, who had $750,000 gross sales of fresh cut flowers and greens during the representative period are eligible to vote. Persons who have received an exemption from assessment for the entire representative period are ineligible to vote.

### List of Subjects in 7 CFR Part 1208

Administrative practice and procedure, Advertising, Consumer information, Marketing agreements, Cut flowers, Cut greens, Promotion, Reporting and recordkeeping requirements.

**Authority:** 7 U.S.C. 6801–6814.

Dated: April 14, 1997.

**Michael V. Dunn,**

*Assistant Secretary, Marketing and Regulatory Programs.*

[FR Doc. 97–10166 Filed 4–18–97; 8:45 am]

**BILLING CODE 3410–02–P**

---

## DEPARTMENT OF AGRICULTURE

## Notice of Availability of Environmental Assessment and Finding of No Significant Environmental Impact for the Boll Weevil Eradication Loan Program

**AGENCY:** Farm Service Agency, USDA.

**ACTION:** Notice of Availability and Finding of No Significant Impact.

**SUMMARY:** The Farm Service Agency (FSA) is preparing to implement the Boll Weevil Eradication Loan Program as provided in an Act making appropriations for Agriculture, Rural Development, Food and Drug Administration, and Related Agencies (Act) programs for the fiscal year ending September 30, 1997, and for other purposes. The specific elements of this program will be to provide financing to State Boll Weevil Eradication Foundations to enable them to conduct or continue to conduct boll weevil eradication activities in cooperation with the Animal and Plant Health Inspection Service (APHIS) of USDA. In accordance with the Act, the loan funds will supplement program cost-share funds appropriated to and administered by APHIS for boll weevil eradication activities.

The FSA has assessed the potential environmental impacts of this proposed action in the attached Environmental Assessment which is, hereby, incorporated into this notice. Based on this analysis, FSA has determined that the proposed action will not significantly affect the quality of the human environment. Therefore, the Agency will not prepare an environmental impact statement for this proposed action. Although this program is new to FSA as a loan program, APHIS previously operated eradication programs and therefore a 15-day comment period is appropriate. The FSA will make no further decisions regarding this proposed action during a 15-day comment period.

**DATES:** Written comments regarding this determination should be provided by May 6, 1997.

**ADDRESSES:** Comments should be submitted to Carolyn B. Cooksie, Deputy Administrator for Farm Loan Programs, Farm Service Agency, Stop 0520, 1400 Independence Avenue, SW., Washington, DC 20250–0520.

**FOR FURTHER INFORMATION CONTACT:** Michael R. Hinton, Chief, Direct Loans and Funding Branch, Farm Loan Programs Loan Making Division, Farm Service Agency, telephone 202–720–1632; facsimile: 202–690–1117; or e-mail: mhintonwdc.fsa.usda.gov

Signed at Washington, DC, on April 15, 1997.

**Bruce R. Weber,**

*Acting Administrator, Farm Service Agency.*

### Farm Service Agency Boll Weevil Eradication Loan Program

*Environmental Assessment, March 1997*

Agency Contact: Michael R. Hinton, Chief, Funds Management/Direct Loans Branch, Loan Making Division, Farm Service Agency, U.S. Department of Agriculture, 1400 Independence Avenue, Mail Stop 0522, Washington, DC 20013, (202) 720–1764.

The U.S. Department of Agriculture (USDA) prohibits discrimination in its programs on the basis of race, color, national origin, gender, religion, age, disability, marital or familial status, or political beliefs. (Not all prohibited bases apply to all programs.) Persons with disabilities who require alternative means for communication of program information (braille, large print, audiotape, etc.) should contact the USDA Office of Communications at 202–720–5881 (voice) or 202–720–7808 (TDD).

To file a complaint, write the Secretary of Agriculture, USDA, Washington, DC 20250, or call 202–720–7327 (voice) or 202–720–1127 (TDD). USDA is an equal employment opportunity employer.

**Table of Contents**

I. Purpose and Need for the Proposed Action ..... 1
II. Alternatives ..... 2
III. Environmental Impacts of Proposed Action and Alternative ..... 3
IV. Listing of Agencies and Persons Consulted ..... 10
Appendix. References ..... 11

### I. Purpose and Need for the Proposed Action

The U.S. Department of Agriculture (USDA), Farm Service Agency (FSA), is proposing to issue regulations for a loan program in support of the National Boll Weevil Cooperative Control Program (BWCP). FSA loans would support and enable Federal/State/private cooperation for components of a national incremental strategy to eradicate the boll weevil from the U.S. Cotton Belt. The proposal would implement provisions of the ''Agriculture, Rural Development, Food and Drug Administration, and Related Agencies Appropriations Act, 1997, '' which directed the Secretary of Agriculture to implement a new loan program to facilitate efforts to eradicate the boll weevil and to protect previous program areas from reinfestation. This programmatic environmental assessment (EA) considers the potential environmental impacts of FSA's proposed loan program and its ''no action'' alternative.

In accordance with the National Environmental Policy Act of 1969 (42 U.S.C. 4321–4347 (NEPA)) and its implementing regulations, the USDA's Animal and Plant Health Inspection Service (APHIS) and its cooperators in boll weevil control analyzed the potential environmental effects of the BWCP in a comprehensive, programmatic environmental document, the ''National Boll Weevil Cooperative Control Program, Final Environmental Impact Statement—1991''(EIS). Subsequent to the publication of the EIS, new program increments have been analyzed within site-specific EA's, and minor program changes/or alterations have been analyzed within other supporting reference documents. The

site-specific EA's and program experience both suggest that there are no significant environmental effects (including those of the synergistic and cumulative variety) at the site-specific level. Copies of the EIS, site-specific EA's, and other reference documents may be reviewed at the APHIS Headquarters, the APHIS Reading Room in Washington, DC, and APHIS' Regional Office (which have announced plans of moving).

National Boll Weevil Eradication Program, Plant Protection and Quarantine, Animal and Plant Health Inspection Service, U.S. Department of Agriculture, 4700 River Road, Unit 138, Riverdale, MD 20737

APHIS Reading Room, Animal and Plant Health Inspection Service, U.S. Department of Agriculture, South Building, Room 1141, 14th & Independence Avenue, SW., Washington, DC 20250.

To assess the potential impacts of FSA's proposed loan program, this programmatic EA provides analysis of the potential environmental impacts of the BWCP. The analysis (1) summarizes and incorporates by reference the findings of the EIS, (2) summarizes and incorporates by reference information in other analytical reference documents pertinent to the BWCP, (3) considers new issues that have been raised since the publication of the EIS, and (4) summarizes FSA plans to further ensure environmental compliance for this loan program.

This EA is intended to be consistent with the Council on Environmental Quality's (CEQ) Regulations for Implementing the Procedural Provisions of the National Environmental Policy Act (NEPA), 40 CFR Parts 1500–1508. In keeping with that guidance, the EA integrates existing environmental documentation, facilitates concurrent and cooperative planning, and reduces the administrative documentation burden. Finally, FSA's administration of loans, grants, and guarantees is guided by 7 CFR 1940, Subpart G, which specifies that an environmental assessment should be prepared for proposals of this nature. The 7 CFR Part 1941 will include a new Subpart C, ''Boll Weevil Eradication Loan Program,'' including sections 1941.970 through 1941.991.

## II. Alternatives

There are two alternatives considered within this environmental assessment—FSA Boll Weevil Eradication Loan Program (the proposed action) and no action. Each is characterized in this section.

### *A. FSA Boll Weevil Eradication Loan Program (Proposed Action)*

The proposed action, a Federal loan program to support and enable components of the BWCP, would implement provisions of the ''Agriculture, Rural Development, Food and Drug Administration, and Related Agencies Appropriations Act, 1997,'' which directed the Secretary of Agriculture to implement a new loan program to facilitate efforts to eradicate the boll weevil and to protect previous program areas from reinfestation. The intended effect is to comply with the Act, assist in boll weevil eradication, and promote cooperation between the USDA and State chartered organizations with regard to boll weevil eradication.

The BWCP is a cooperative effort between cotton growers and Federal and State governments. The USDA's Animal and Plant Health Inspection Service (APHIS), the lead Federal agency for the BWCP, provide eligible grower organizations with (1) equipment, (2) technical and administrative support, and (3) cost-sharing not to exceed 30 percent of the program costs. The portion of the program costs not provided by APHIS are paid by participating grower organizations through the collection of producer assessments. These assessments, often high in early program stages, can create financial hardship for producers.

The FSA Boll Weevil Eradication Loan Program will provide loans to eligible grower organizations (not individual growers) for the purpose of spreading startup costs over a period of several years, thereby reducing the initial annual assessments that producers are required to pay and resulting in a financially feasible program.

### *B. No Action*

Under the no action alternative, there would be no FSA Boll Weevil Eradication Loan Program. The no action alternative is considered for the purpose of establishing a hypothetical baseline against which the proposed action may be evaluated. Consideration of no action is appropriate for the purpose of this assessment, notwithstanding the explicit mandates of the ''Agriculture, Rural Development, Food and Drug Administration, and Related Agencies Appropriations Act, 1997'' and Congress' direction to the U.S. Secretary of Agriculture to implement a new loan program. Under the no action alternative, cooperation between Federal, State, and grower groups would likely diminish.

Under a free market system, cotton producers would be expected to, but might not be able to, bear the high assessments in the startup phase of an eradication program. Because of the problems regarding cash flow, some grower groups may not be able to meet their operating expenses and their programs would be forced to be suspended. Suspension of programs in some areas could cause reinvasion by boll weevil populations to the extent that it would put at risk the progress, continuity, and integrity of the BWCP's national strategy to eradicate the boll weevil.

## III. Environmental Impacts of Proposed Action and Alternative

The environmental impacts that may result from implementation of the proposed action and its no action alternative are considered in this section. Because the principal environmental concern over this proposed program relates to its use of pesticides, this EA focuses on the potential effects of the proposed program's pesticides.

### *A. FSA Boll Weevil Eradication Loan Program (Proposed Action)*

The loan approval process, in and of itself, does not directly generate environmental impacts. However, in the sense that the loan approval process may enable certain increments of the eradication program to take place, it could indirectly contribute to the potential impacts of that control program. Therefore, the environmental impacts from implementation of the eradication program are addressed here.

The national program to eradicate the boll weevil employs a beltwide integrated control strategy. This strategy involves the selection of specific control methods for the individual site based on factors including variation in boll weevil biology, availability of overwintering sites, environmental concerns, weather patterns, and crop production requirements. The integrated control components of this program include limited no action, mechanical control, sterile insect technology, biological control, cultural control, and chemical control. The environmental impacts and related issues of the integrated control methods are described below.

#### 1. Environmental Impacts in General

Most of the issues related to environmental impacts of this program have been analyzed in detail in the EIS and in the ''Chemicals Risk Assessment, Boll Weevil Cooperative Eradication Program, December 1995'' (CRA). The

results of the environmental risk assessments prepared for these two documents are incorporated by reference, and a summary is given within this section.

The history and evaluation of the BWCP has confirmed the analytical predictions of the EIS and site-specific, EA's. For example, completion (in 1990) of the boll weevil eradication program in Georgia resulted (in 1995) in a dramatic resurgence in cotton production, accompanied by a 60% reduction in post-eradication insecticide treatments, 30% reduction in pest management costs, and 70% reduction in overall crop damage (Haney *et al.*, 1996). Similarly, the BWCP's carefully managed efforts in Alabama resulted in diminished pesticide use, greater survival of beneficial arthropods, and preservation of the effectiveness of pyrethroid chemistry for years to come (Smith and Foshee, 1993). Finally, a series of monitoring reports (some with special focus on human health or endangered species) have been done for program increments. Those monitoring reports have documented appropriate use and deposition of pesticides, have confirmed that there have been no adverse impacts on humans, and confirmed that the programs' protection measures have adequately protected endangered and threatened species.

The nonchemical control methods have minimal impact on human health, the physical environment, and nontarget species. The use of ''no action'' buffer zones and related practices for the limited no action method reduce the risk of exposure and effects from program pesticides. The use of methods, such as mechanical control (trapping) and sterile insect technique, that directly target only boll weevils have little impact on human health, the physical environment, and nontarget species. The disturbance from vehicular and foot travel is negligible and exposure to trap chemicals is minimal. The use of biological control is associated with reduced need for chemical pesticides and commensurate reductions in exposure and impacts. The use of cultural control methods (crop rotation, short-season varieties, and mandatory postharvest stalk destruction) pose minimal risks to equipment operators, slight losses from soil disruption, and no impacts to nontarget species that exceed the effects of current practices.

The potential impacts of the chemical control methods relate to the program use of any of the six pesticides: azinphos-methyl, diflubenzuron, endosulfan, malathion, methyl parathion, and oxamyl. Refer to the EIS and CRA for greater detail on the formulations and use patterns. The potential impacts to human health, the physical environment, and nontarget species were assessed through both quantitative and qualitative methods. Hazard information (pesticide toxicity and environmental fate) was integrated with exposure predictions to develop the risk characterization. Potential exposure scenarios were analyzed for dermal, inhalation, and dietary exposures of the public and program workers from applications of each program chemical.

Human health risk was quantified by comparing predicted exposure to toxicity reference levels based upon intrinsic hazards as described in detail in the EIS (volume 1, appendix B, section B.4) and in the CRA (chapter 3). Those toxicity reference values were applied to expected exposures to quantify risk. The classifications of the program pesticide's acute human oral toxicities are as follows: slight for malathion, very slight for diflubenzuron, and moderate to severe for azinphos-methyl, endosulfan, methyl parathion, and oxamyl. The potential risk to program workers and the general public are presented in the programmatic EIS (volume 1, appendix B, section B.4.) and in the CRA (chapter 5, section A), Comprehensive training of all workers assures that there will be adequate margins of safety to prevent adverse effects for all likely exposure routes. Likewise, the margins of safety to the general public result in minimal risk and adequate safety against adverse effects.

Qualitative risk assessment is used to analyze risks that cannot be quantified easily, especially those involving incomplete exposure information or unclear relationships between dose and response. Thorough discussions of qualitative risks are presented in the EIS and CRA. Qualitative risks are determined for effects from program pesticide formulations' impurities and degradation products, anticipated cumulative and synergistic effects, and effects on sensitive subgroups. Program quality control guidelines require proper storage conditions and sampling of the product to ensure that impurities and degradation products pose no significant hazard to workers or the general public. Cumulative and synergistic effects of the program chemicals are minimized through the use of proper safety procedures and adherence to safe reentry periods. Refer to the EIS and CRA for more information about synergism. Certain individuals may have increased risk due to location, disease state, or other biological characteristics. Those living next to a cotton field are at greatest risk. Infants may be more sensitive than adults to the effects of exposure to program pesticides. Individuals on certain medicines may be at increased risk. Individuals with multiple chemical sensitivity may be extremely sensitive to even very low levels of exposure to a variety of chemical agents. Proper notification, instruction about reentry precautions, and adherence to recommended safety precautions, reduces potential for exposure to program chemicals and resultant risks.

The chemical pesticides proposed for use in the program have potential to affect the physical environment (air, water, land). Program pesticides are not expected to affect the air quality in the general sense, but localized off-site drift may occur. This drift is expected to be minimal because the proposed program chemicals have low volatility and program precautions limit potential for drift (refer to table 2–1 of the EIS and chapter 2 of the CRA). The potential for soil pollution is expected to be minimal. Sophisticated guidance and control systems of application equipment (such as the global positioning systems), rapid degradation of program pesticides, and lack of persistence of residues contribute to minimal impact (refer to volume 1, appendix B, section B.8. of the EIS and chapter 2 of the CRA). The potential for runoff of program pesticides is greatest if rainfall occurs shortly after treatments, but operating procedures and recommended mitigation measures (tables 2–1 and 2–2 of the EIS) serve to minimize the effects of program chemicals on bodies of water. Modeling of the movement of program pesticides in soil following applications indicates that the potential for percolation of pesticide residues to groundwater is negligible.

Risks of the potential adverse effects of program chemicals to nontarget species (domestic animals, wildlife, and plant) are characterized as low, moderate, or high for routine and extreme scenarios. The methodology is presented in detail in the EIS (volume 1, appendix B, sections B.5. to B.7.) and CRA (chapter 6). Detailed results of the nontarget risk assessments are found in tables 4–3 through 4–6 of the EIS and tables VI–1 through VI–3 of the CRA. The data are summarized briefly as follows: Malathion poses little risk to most terrestrial organisms, but can pose a high risk to fish, amphibians, and aquatic invertebrates. Potential drift concentrations of azinphos-methyl present little risk, but a direct spray may present moderate to high risk to terrestrial organisms. For aquatic

species, azinphos-methyl presents a high risk to fish, amphibians, and aquatic invertebrates. Potential drift concentrations of methyl parathion may present a moderate risk to some terrestrial species, while a direct spray presents moderate to high risks. Also, methyl parathion poses moderate risk to aquatic invertebrates. Diflubenzuron presents little risk to terrestrial organisms but may pose moderate to high risk to aquatic invertebrates. Endosulfan presents little risk to most terrestrial and aquatic species, but poses a moderate risk to mammals. Oxamyl presents little risk to aquatic species, but poses moderate risk to most terrestrial wildlife species. Standard program operational procedures and mitigations reduce the potential for exposure of domestic animals and wildlife.

Although program applications of pesticides pose no direct risk to plant species, there may be some indirect risk to plants associated with adverse effects to pollinators. It is unlikely that the application of pesticides used in the program would eliminate all pollinators for the length of time sufficient to prevent pollination, but pesticides could temporarily reduce the number of potential pollinators for a particular plant species. Honey bees are important as crop pollinators and honey producers in many areas. As a precaution, prior to treatments with azinphos-methyl, malathion, methyl parathion, or oxamyl, program personnel with notify registered apiarists in or near the treatment area of the date and approximate time of the treatment application.

2. Program Changes or Additions

a. Addition of new pesticides. Since the publication of the EIS, two additional pesticides (endosulfan and oxamyl) have been approved for the program. Information on those pesticides and their potential effects is presented in a comprehensive manner in the CRA and has been included in the above section, ''Environmental Impacts in General.''

*b. Changing managerial roles.* Since the BWCP's beginning, APHIS has been the lead Federal agency for the program, providing personnel and substantial funding. Its involvement has been critical to the program's success and expansion across nearly 4 million acres of cotton in 10 States. As of the publication of this EA, the program in the Southeast is rapidly moving toward completion and the program's Federal resources in that area are changing. As work units are consolidated and configured for post-eradication surveillance, Federal positions and funds are being reduced.

As the program expands into remaining infested areas of the Midsouth, most, if not all, of the funding for those remaining areas will be provided by growers. The transition from Federal leadership and control to grower leadership and control will continue, characterized by a steadily diminishing APHIS role in the daily management of program operations. APHIS has indicated that it will remain actively involved in providing technical support and assistance to grower groups. APHIS also has indicated that it intends to continue its involvement with the National Cotton Council's Boll Weevil Action Committee, consulting on the most effective way to allocate and utilize funds which may be appropriated for boll weevil eradication.

The environmental impact of changing managerial roles is difficult to predict with certainty. Because the program's potential environmental impacts are related to its eradication strategies (control methods, operational procedures, and mitigation methods), any changes in those could result in a change in the extent or severity of impacts. It is not likely, however, that increasing grower leadership and control in the program will result in substantial changes to the eradication strategies. Thus, no changes are expected in the program's potential environmental impacts as a consequence of changing managerial roles. (It also should be noted that FSA has no managerial role in the BWCP, but functions solely in the approval, processing, and granting of loans to the BWCP's member organizations.)

3. New Issues

Although the potential environmental impacts of boll weevil control strategies have been analyzed in the EIS and CRA, some new issues have arisen since their publication. The most important of those issues and the program's response to those issues are summarized in this section.

*a. Environmental justice.* The concept of ''environmental justice'' was addressed in a general way by Executive Order 12898, ''Federal Actions To Address Environmental Justice in Minority Populations and Low-Income Populations'' (EO 12898), signed on February 11, 1994. It was designed to make Federal agencies identify and address ''* * * as appropriate, disproportionately high and adverse human health or environmental effects of its programs, policies, and activities on minority populations and low-income populations * * *.'' Since EO 12898's publication, environmental justice review has become a standard part of the site-specific environmental assessment process for the BWCP. Ethnic, social, and economic characteristics of program areas are considered in the development, as appropriate, of innovative strategies to communicate with, involve, and accommodate the public. Although environmental justice concerns are reviewed for all new program increments, those concerns have increased importance where the composition of communities warrants extra or ''tailored'' protection measures and operational procedures. Program managers have promptly acknowledged those communities' special needs and worked with the communities to accommodate them. Following are examples of the kinds of additional things that may be done in some program areas to ensure environmental justice.

1. Special site visits and interviews of community members.
2. Special scoping meetings to identify potential environmental impacts and problems.
3. Additional public meetings and/or hearings.
4. Language translations for meetings, environmental documents, and signs.
5. Additional lead time for public notification of impending pesticide applications.
6. Specially tailored protection measures.
7. More stringent program oversight and monitoring for pesticide drift.
8. Use of extremely precise global positioning systems for pesticide application.

FSA will also consider environmental justice within the context of its loan approval process, adhering to the principles espoused in EO 12898. Loan approvals will be granted without discrimination based on race, religion, color, national origin, gender, or other prohibited basis. Further, FSA requires that no recipient of a boll weevil eradication loan will directly, or through contractual or other arrangement, subject any person or cause any person to be subjected to discrimination on any of the above factors. Borrowers must comply with all applicable Federal laws and regulations regarding equal opportunity in hiring, procurement, and related matters. Lastly, FSA strives to ensure environmental justice in its loan approval process through its adherence to NEPA implementation procedures, improved accessibility of meetings, critical documents, and notices.

*b. Potential influence on endocrine systems.* Several recent studies have analyzed the effects of chemical exposure on the endocrine systems of humans and wildlife (Stone, 1994; Arnold et al., 1996; Kendall and Dickerson, 1996; Ramamoorthy et al., 1997). This has become a major issue in science and public policy. The quantification of these effects and the elucidation of their mechanisms of toxic action have not been studied in detail. Because the issue has arisen subsequent to the publication of the EIS and the CRA, available literature on these effects relevant to the program chemicals was reviewed.

A comprehensive literature review revealed inconclusive information linking only one of the program chemicals to this effect. One study found that endosulfan's reported ability to disrupt estrogen production was synergized by exposure to other compounds (Arnold *et al.*, 1996). However, another study did not find this relationship (Ramamoorthy *et al.*, 1997). The limited data and published research on this topic make it difficult to conduct a thorough risk assessment, but the exposures determined from risk assessment scenarios can be compared to concentrations shown to cause adverse effects in these studies. Even under the assumption that the study that showed the linkage was correct, the program's operational procedures and mitigation methods generally reduce the potential for exposure and resultant adverse effects. Comparing the effects data of Arnold *et al.* (1996), typical human exposures to endosulfan from program scenarios do not reach levels greater than 1,000-fold lower than this data and typical wildlife exposures to endosulfan from program scenarios do not achieve levels greater than 10-fold lower than this data. This indicates that exposures from program applications of endosulfan would not be anticipated to result in endocrine disruption to any exposed animals or humans.

4. Sequential Compliance

*a. Site-specific analysis.* This programmatic EA considers in general the impacts of the FSA Boll Weevil Eradication Loan Program and its no action alternative. The impacts of FSA's loan program (the proposed action) are related indirectly to the impacts of the BWCP, which were analyzed programmatically in the EIS and CRA, and site-specifically in APHIS EA's tiered to the EIS. Thus far, those site-specific EA's have revealed no significant impact from localized implementation of the BWCP's boll weevil control strategies.

As the BWCP expands and additional areas are taken under control, the potential impacts of program implementation in those areas will be analyzed in additional site-specific EA's prepared by APHIS or other Federal cooperators (if APHIS' role is substantially diminished or eliminated in the future). For those site-specific EA's where there is a high probability that the grower organization may apply for a boll weevil eradication loan, FSA will serve as a cooperating agency for determining that no significant environmental impacts will exist. Thus, the determination of potential environmental effect for individual FSA boll weevil eradication loans is based primarily upon information in the EIS, the CRA, and this EA, but is subject to further modification by site-specific EA's for new program areas.

*b. Endangered Species Act (ESA) compliance.* The ESA and its implementing regulations require Federal agencies to consult with the U.S. Department of the Interior's Fish and Wildlife Service (FWS) and/or the U.S. Department of Commerce's National Marine Fisheries Service to ensure their actions are not likely to jeopardize the continued existence of endangered or threatened species or result in the destruction or adverse modification of critical habitat. APHIS currently consults with these agencies and prepares biological assessments for each new increment of the BWCP. (If APHIS' role is eliminated in this process, another Federal agency would need to take that role.) For those species for which potential adverse effects are identified, additional protective measures are developed and submitted as part of the biological assessment to FWS for concurrence. The BWCP will comply with all protection measures stipulated in the biological assessment and mutually agreed on by FWS.

*B. No Action*

Implementation of the no action alternative would mean that there would be no Federal loan program to support the BWCP. That would have two principal effects—a devastating effect on the quality and quantity of cotton production in the United States and the likelihood of increased adverse impacts from the extensive private use of pesticides. The most adverse impact of the no action alternative would be the effects on the quality and quantity of cotton production in the United States. More cotton would be ruined from boll weevil infestation and less would be available for sale and processing. Growers profits would be reduced and consumers' costs would be increased.

The lack of continuity for program funding could make it increasingly difficult for growers near the edge of the eradicated zones to prevent future reinfestation of their fields from the areas not yet eradicated. The pesticide levels required to renew control would increase to pre-eradication levels, with associated adverse impacts. Those adverse impacts would increase dramatically because of the need for multiple applications and the use of some pesticides that pose greater environmental hazards than the program pesticides. These greater hazards could impact human health, the physical environment, and nontarget species.

## IV. Listing of Agencies and Persons Consulted

Gary Cunningham, Coordinator, National Boll Weevil Eradication Program, Plant Protection and Quarantine, Animal and Plant Health Inspection Service, U.S. Department of Agriculture, 4700 River Road, Unit 138, Riverdale, MD 20737–1236

Bill Grefenstette, Senior Operations Officer, National Boll Weevil Eradication Program, Plant Protection and Quarantine, Animal and Plant Health Inspection Service, U.S. Department of Agriculture, 4700 River Road, Unit 138, Riverdale, MD 20737–1236

Harold T. Smith, Environmental Protection Officer, Environmental Analysis and Documentation, Policy and Program Development, Animal and Plant Health Inspection Service, U.S. Department of Agriculture, 4700 River Road, Unit 149, Riverdale, MD 20737–1238

David A. Bergsten, Toxicologist, Environmental Analysis and Documentation, Policy and Program Development, Animal and Plant Health Inspection Service, U.S. Department of Agriculture, 4700 River Road, Unit 149, Riverdale, MD 20737–1238

## Appendix—References

Arnold, S.F., Klotz, D.M., Collins, B.M., Vonier, P.M., Guillette, L.J., Jr. and McLachlan, J.A., 1996. Synergistic activation of estrogen receptor with combinations of environmental chemicals. Science 272:1489–1492.

Haney, P.B., Lewis, W.J., and Lambert, W.R., 1996. Cotton production and the boll weevil in Georgia: history, cost of control, and benefits of eradication. Georgia Agricultural Experiment Stations, College of Agricultural and Environmental Sciences, University of Georgia., Res. Bull. No. 428.

Kendall, R.J., and Dickerson, R.L., 1996. Principles and processes for evaluating endocrine disruption in wildlife. Environ. Toxicol. Chem. 15(8):1253–1254.

Ramamoorthy, K., Wang, F., Chen, I–C., Safe, S., Norris, J.D., McDonnell, D.P., Gaido, K.W., Bocchinfuso, W.P., and Korach, K.S., 1997. Potency of combined estrogenic pesticides. Science 275:405.

Smith, R.H., and Foshee, W.G., 1993. Effects of the boll weevil eradication program on insecticide use patterns on cotton in Alabama. Dept. of Entomology, Auburn University, Auburn, AL.

Stone, R., 1994. Environmental estrogens stir debate. Science 265:308–310.

## Finding of No Significant Impact For Farm Service Agency Boll Weevil Eradication Loan Program Environmental Assessment

March 1997.

The U.S. Department of Agriculture, Farm Service Agency (FSA), has prepared an environmental assessment (EA) for its participation in the National Boll Weevil Cooperative Control Program (boll weevil program) through the provision of a loan program. The EA, incorporated into this document by reference, is also tiered to the ''Final Environmental Impact Statement for the National Boll Weevil Cooperative Control Program-1991.'' The EA is available from: U.S. Department of Agriculture, Farm Service Agency, 14th and Independence Avenue, Washington, D.C. 20250–0513.

This EA is programmatic in scope and considered the impacts of two alternatives: (1) the no action alternative, and (2) the proposed alternative that encompasses the current control program. The current program includes chemical, biological, cultural, and mechanical control methods. The proposed program is needed in order to (1) reduce agricultural losses caused by the boll weevil and allow growers to remain economically competitive, (2) substantially reduce the amount of pesticides used against the boll weevil and other pests, (3) maintain the biological integrity and efficacy of the national program to eradicate the boll weevil, and (4) comply with relevant pest control statutes and regulations.

The Animal and Plant Health Inspection Service is consulting with the U.S. Department of the Interior, Fish and Wildlife Service (FWS) with regard to the protection of endangered and threatened species and their critical habitats. All boll weevil control activity will adhere to protective measures designed specifically for this program and mutually agreed to with FWS.

I find that implementation of the proposed boll weevil eradication program as described in the EA and all referenced documents will not significantly impact the quality of the human environment.

I have considered and base my findings of no significant impact on the quantitative and qualitative analyses and risk assessments of the proposed pesticides as well as a review of the program's overall operational characteristics. In addition, I find that the environmental process undertaken for the boll weevil eradication program is entirely consistent with the principles of ''environmental justice,'' as defined in Executive Order No. 12898. Furthermore, since I have not found evidence of significant environmental impact associated with this program, there is no need to prepare an environmental impact statement and the program may proceed as described in the referenced documents.

Dated: April 15, 1997.

**Bruce R. Weber,**

*Acting Administrator, Farm Service Agency.*

[FR Doc. 97–10206 Filed 4–18–97; 8:45 am]

BILLING CODE 3410–05–M

---

## DEPARTMENT OF AGRICULTURE

## Forest Service

## Revision of the Land and Resources Management Plan for the Chugach National Forest, Alaska

**AGENCY:** Forest Service, USDA.

**ACTION:** Notice of Intent to prepare an environmental impact statement and a revised land and resource management plan for the Chugach National Forest.

**SUMMARY:** The Chugach National Forest will prepare an environmental impact statement (EIS) for revising the Land and Resource Management Plan (Forest Plan), and a revised Forest Plan document, pursuant to 16 U.S.C. 1604(f)(5) and 36 CFR 219.12. The revised plan will supersede the current Forest Plan, which was approved on July 27, 1984 and which has been amended six times.

**ADDRESSES:** Send written comments pertaining to the revision of the Forest Plan to: Forest Plan Revision, Chugach National Forest, 3301 C St., Suite 300, Anchorage, AK 99503–3998.

**FOR FURTHER INFORMATION CONTACT:** Gary Lehnhausen, Forest Planning Team Leader; (907) 271–2560 or FAX (907) 271–3992.

**SUPPLEMENTARY INFORMATION:** Forest Plans are ordinarily revised on a 10-year cycle, or at least every 15 years (U.S.C. 1604(f)(5) and 36 CFR 219.10(g)). Forest Plans guide the overall management of the National Forests through the following six management direction elements:

(1) Forest multiple-use goals and objectives, 36 CFR 219.11(b);

(2) Forest-wide management requirements (standards and guidelines) 16 U.S.C. 1604 and 36 CFR 219.13 to 219.27;

(3) Management areas and management area direction (management area prescriptions) 36 CFR 219.11(c);

(4) Designated suitable timber land (16 U.S.C. 1604(k) and 36 CFR 219.14) and an allowable timber sale quantity (16 U.S.C. 1611 and 36 CFR 219.16):

(5) Nonwilderness allocations or wilderness recommendations where 36 CFR 219.17 applies; and

(6) Monitoring and evaluation requirements (36 CFR 219.11(d)).

The Forest Service has determined there is a need to make some changes to the 1984 Forest Plan, as amended. The revised Plan will be developed to address management of the Chugach National Forest. The following preliminary issues have been identified through monitoring and evaluation, project planning and implementation activities, and public comments received during the life of the existing Plan.

### Preliminary Issues

*Roadless Area Management and Wilderness Recommendations*

There is interest in the management of existing roadless areas. Some people feel that more of the Chugach National Forest should be allocated to protective designations, or recommend for wilderness, in order to conserve biological diversity, provide primitive recreational opportunities, provide opportunities for scientific research or baseline monitoring, protect unique features and resources, and provide for other non-commodity values and uses. Others are concerned that protective designations could limit or constrain recreation uses, fish and wildlife enhancement opportunities, increased access, commodity uses, and economic returns to local communities. Currently, about 98 percent of the 5.4 million acre Forest is roadless and potentially eligible for wilderness designation.

*Recreation and Tourism*

There is a concern about changes to tourism and recreation on the Forest. The recent decision by the State of Alaska to build a road to Whittier is expected to greatly increase recreation and tourism use of the Prince William

Sound area. The amount of use of the Forest by outfitters and guides for commercial recreation uses is also an emerging issue due to rising use levels on some popular trails and recreation areas.

*Vegetation Management*

There is public interest in how the Forest's vegetation should be managed and used. Proposed timber harvest activities within inventoried roadless areas have raised public concerns about the potential effect on the availability of those areas for wilderness or other protective designations. Proposed salvage sales, related road building, and the use of roads after harvest operations, have also been raised as issues by the public. In the 13 years of operation under the current Forest Plan, the Chugach has sold an average 3.38 million board feet per year and an average 2.26 million board feet of timber per year have been harvested. Most of this timer harvest has been concentrated on the Kenai Peninsula portion of the Forest.

*Wild and Scenic Rivers*

The existing Forest Plan did not consider any rivers or streams for designation under the Wild and Scenic Rivers Act of 1968. During the past two years, a comprehensive review of more than 760 named and unnamed rivers and glaciers on the Forest was conducted. Twenty rivers and three glaciers have been tentatively identified as containing one or more ''outstandingly remarkable'' values.

During the revision process rivers may be added or dropped from those found eligible and public involvement will be considered in determining potential classification of the rivers as wild, scenic or recreational. A suitability determination for each river/glacier will be made in the revision process. If a river is found suitable, the Regional Forester may recommend the river for inclusion in the National Wild and Scenic Rivers System.

Subject to valid existing rights, all rivers/glaciers found eligible will be given interim protection to preserve their potentially ''outstandingly remarkable'' characteristics and maintain the highest level of classification until a final suitability determination and recommendation is made in the revised Forest Plan.

*Travel Management and Access*

Many people value the recreation experience afforded by the lack of road access to most of the Forest. Others point out a need for additional public access either by road or trail for recreation use. Some people object to roads planned into roadless areas for resource development and are concerned with increased motorized use on new roads. Competition between ''muscle powered'' recreationists and motorized recreationists for areas to pursue their activities is increasing.

**Additional Issues**

Public comments received on this Notice of Intent and through further public participation activities will be used to create a list of significant issues for the EIS and the revised Forest Plan. The EIS and revised Forest Plan will also address other subjects in response to existing planning direction. These will include (among others):

—Biological diversity;
—Minerals management;
—Fish and wildlife habitat management;
—Scenic resource management;
—Research Natural Areas; and
—Electronic and communication sites.

Comments on the preliminary, or potential additional issues, and possible solutions to these issues are welcomed. Additional information concerning the scope of the revision will be provided through future mailings, news releases, and public meetings.

The Chugach National Forest will hold a series of open house and focus group meetings in communities in and near the Forest and host a revision forum in Anchorage, Alaska, to provide information about the process of revising the Forest Plan, and to gather public input on formulation of alternatives and the scope and nature of the decisions to be made. Meeting dates and locations will be announced in the media.

In preparing the EIS for revising the Plan, the Forest Service will estimate the potential impacts of various management alternatives on the Forest's physical and biological resources, as well as the potential economic and social impacts on local communities and the broader regional economy.

The draft EIS and proposed revised Forest Plan are tentatively scheduled for release and public review in September 1998. A 90-day public comment period will be provided for these documents. The final EIS, revised Forest Plan, and a record of decision are currently scheduled for completion in June 1999.

The Forest Service believes, at this early stage, it is important to give reviewers notice of several court rulings relating to public participation in the environmental review process. Reviewers of draft EIS's must structure their participation in the environmental review of the proposal so that it is meaningful and clearly informs an agency of the reviewer's position and contentions, *Vermont Yankee Nuclear Power Corp.* v. *NRDC* U.S. 519, 533 (1978). Also environmental concerns that could be raised at the draft EIS stage but that are not raised until after completion of the final EIS may be waived or dismissed by the courts, *City of Angoon* v. *Hodel*, 803 F.2d 1016, 1022 (9th Cir. 1986) and *Wisconsin Heritages, Inc.* v. *Harris*, 490 F. Supp. 1334, 1338 (E.D. Wis. 1980). Because of these court rulings, it is very important for those interested in this proposed action participate by the close of the 90-day comment period on the draft EIS, so that substantive comments and objections are made available to the Forest Service at a time when they can be meaningfully considered and responded to in the final EIS.

The responsible official for the EIS and the revised Forest Plan is the Regional Forester, USDA Forest Service, P.O. Box 21628, Juneau, Alaska 99802–1628.

Dated: April 8, 1997.

**Kimberly Bown,**

*Acting Regional Forester.*

[FR Doc. 97–10197 Filed 4–18–97; 8:45 am]

BILLING CODE 3410–11–M

---

## DEPARTMENT OF AGRICULTURE

### Grain Inspection, Packers and Stockyards Administration

### Notice of Request for Extension of a Currently Approved Information Collection

**AGENCY:** Grain Inspection, Packers and Stockyards Administration.

**ACTION:** Notice and request for comments.

**SUMMARY:** In accordance with the Paperwork Reduction Act of 1995 (44 U.S.C. 35), this notice announces the Grain Inspection, Packers and Stockyards Administration's (GIPSA) request for an extension for and revision of a currently approved information collection in support of the reporting and recordkeeping requirements under regulations under the Packers and Stockyards Act of 1921, as amended (7 U.S.C. 181, *et seq.*).

**DATES:** Comments on this notice must be received by June 20, 1997.

**ADDITIONAL INFORMATION OR COMMENTS:** Contact Sharon Vassiliades, ARTS, GIPSA, USDA, STOP 3649, 1400 Independence Avenue, SW, Washington, D.C. 20250–3649 or FAX

202 720–4628, telephone: 202 720–1738.

**SUPPLEMENTARY INFORMATION:**

*Title:* Regulations and related reporting and recordkeeping requirements, Packers and Stockyards Act.

*OMB Number:* 0580–0015.

*Expiration Date of Approval:* September 30, 1997.

*Type of Request:* Revision of a currently approved information collection.

*Abstract:* The information is needed in order for GIPSA to carry out its responsibilities under the Packers and Stockyards Act. It is used to provide business transaction safeguards that are necessary to protect financial interests and trade practices of livestock producers and others in the livestock industry. The purpose of this notice is to solicit comments from the public concerning our information collection.

*Estimate of Burden:* Public reporting and recordkeeping burden for this collection of information is estimated to average 8.5 hours per response.

*Respondents:* Livestock auction markets, livestock dealers, packer buyers, meat packers, and live poultry dealers.

*Estimated Number of Respondents:* 10,950.

*Estimated Number of Responses per Respondent:* 3.2.

*Estimated Total Annual Burden on Respondents:* 301,106 hours.

Copies of this information collection can be obtained from Cathy McDuffie, the Agency Support Services Specialist, at (301) 734–5190.

## Comments

Comments are invited on: (a) Whether the collection of information is necessary for the proper performance of the functions of the agency, including whether the information will have practical utility; (b) the accuracy of the agency's estimate of the burden of the proposed collection of information including the validity of the methodology and assumptions used; (c) ways to enhance the quality, utility, and clarity of the information to be collected; and (d) ways to minimize the burden of the collection of information on those who are to respond, including through the use of appropriate automated, electronic, mechanical, or other technological collection techniques or forms of information technology. Comments may be sent to: Sharon Vassiliades, ARTS, GIPSA, USDA, STOP 3649, 1400 Independence Avenue, SW, Washington, D.C. 20250–3649 or FAX 202 720–4628, telephone: 202 720–1738.

All responses to this notice will be summarized and included in the request for OMB approval. All comments will also become a matter of public record.

Done at Washington, D.C. this 15th day of April 1997.

**James R. Baker,**

*Administrator.*

[FR Doc. 97–10164 Filed 4–18–97; 8:45 am]

BILLING CODE 3410–EN–P

---

## COMMISSION ON CIVIL RIGHTS

### Agenda and Notice of Public Meeting of the Nebraska Advisory Committee

Notice is hereby given, pursuant to the provisions of the rules and regulations of the U.S. Commission on Civil Rights, that a meeting of the Nebraska Advisory Committee to the Commission will convene at 6:00 p.m. and adjourn at 9:00 p.m. on May 15, 1997, at the Chamber of Commerce, 309 West 2nd Street, Grand Island, Nebraska 68801. The purpose of the meeting is to plan for future activities and provide information on filing civil rights complaints.

Persons desiring additional information, or planning a presentation to the Committee, should contact Melvin L. Jenkins, Director of the Central Regional Office, 913–551–1400 (TDD 913–551–1414). Hearing-impaired persons who will attend the meeting and require the services of a sign language interpreter should contact the Regional Office at least five (5) working days before the scheduled date of the meeting.

The meeting will be conducted pursuant to the provisions of the rules and regulations of the Commission.

Dated at Washington, DC, April 11, 1997.

**Carol-Lee Hurley,**

*Chief, Regional Programs Coordination Unit.*

[FR Doc. 97–10226 Filed 4–18–97; 8:45 am]

BILLING CODE 6335–01–P

---

## DEPARTMENT OF COMMERCE

### International Trade Administration

**[A–201–817]**

### Oil Country Tubular Goods From Mexico; Notice of Termination of Antidumping Duty Administrative Review

**AGENCY:** Import Administration, International Trade Administration, Department of Commerce.

**ACTION:** Notice of termination of antidumping duty administrative review.

**EFFECTIVE DATE:** April 21, 1997.

**SUMMARY:** On September 17, 1996, the Department of Commerce (''the Department'') published in the **Federal Register** (61 FR 48882) a notice announcing the initiation of an administrative review of the antidumping duty order on Oil Country Tubular Goods (''OCTG'') from Mexico. This review covered the periods August 11, 1995 through July 31, 1996 for Drill Pipe and June 28, 1995 through July 31, 1996 for OCTG Other Than Drill Pipe. This review has now been terminated as a result of the withdrawal of the request for administrative review by the petitioners and the absence of entries into the U.S. of subject merchandise during the period of review by the only remaining party requesting review.

**FOR FURTHER INFORMATION CONTACT:** Samantha Denenberg or Linda Ludwig, Group III, Import Administration, International Trade Administration, U.S. Department of Commerce, 14th Street and Constitution Avenue, NW, Washington, D.C. 20230; telephone (202) 482–0413 or 482–3833, respectively.

**SUPPLEMENTARY INFORMATION:**

## Background

On August 29, 1996, Hylsa S.A. de C.V. (''Hylsa'') requested a review of its sales. Additionally, petitioners requested a review of Tubos de Acero de Mexico, S.H. (''TAMSA''), Tuberia Nacional S.A. de C.V. (''TUNA''), and Hylsa. On October 4, 1996 and October 16, 1996 TAMSA and TUNA respectively filed letters certifying to the Department that they did not export any subject merchandise that was entered for consumption into the United States during the period of review (POR). The Department sent no-shipment inquiries regarding TAMSA and TUNA to U.S. Customs on October 28, 1996. Customs did not indicate that there were any such entries. On December 9, 1996, Hylsa filed its response to sections B and C of the Department's questionnaire for the 1995–96 review. On December 10, 1996, petitioners withdrew their review request as to all Mexican producers of OCTG, including Hylsa. On December 18, petitioners pointed out that Hylsa's December 9 questionnaire response disclosed for the first time the fact that Hylsa had no customs entries of OCTG during the POR. Hylsa has knowledge of entry dates of subject merchandise. Petitioners requested that the

Department terminate the review as to Hylsa for this reason. On December 26, Hylsa submitted comments responding to that request.

Petitioners cite *Silicon Metal from Brazil: Final Results of Antidumping Duty Administrative Review* (''92–93 Silicon Metal Final''), 61 Fed. Reg. 46763, 46765 (September 5, 1996) as the precedent to this case. The 92–93 Silicon Metal Final findings stated that review of a margin may be based on sales during a POR, rather than the prices of entries during the POR, when there are entries during the POR. All respondents in the 92–93 Silicon Metal Final had at least one consumption entry into U.S. Customs territory during the POR (61 FR At 46765). Hylsa, in contrast, had no such entries during the POR. Without entries during the POR, there is nothing upon which duties determined in the course of the review may be assessed.

Hylsa argued that petitioners' request for termination of the review was based on a misreading of the antidumping statute and was inconsistent with the Department's regulations and the Department's past decisions. Hylsa stated that the Department was required by its statute and regulations to conduct the review which it has requested in order to determine a deposit rate based on Hylsa's own data, and suggested that the Department use, for this purpose, Hylsa's sales during the POR.

**Analysis**

Hylsa first argues that Section 751(a)(1) of the Tariff Act requires the Department to conduct a review whenever, as in this case, a request for review has been received. Hylsa's argument, however, ignores the context of the administrative review provision upon which it relies. Section 751(a) is entitled ''Periodic Review of Amount of Duty.'' The other relevant portions of 751(a)(1) provide that if, during the annual anniversary opportunity to request review, ''a request for such a review has been received,'' the Department shall, when the requested review is of an antidumping order, ''review and determine, (in accordance with paragraph (2)), the amount of any antidumping duty,'' and (in a section applying to all administrative reviews) ''shall publish in the **Federal Register** the results of such review, together with notice of any duty to be assessed, estimated duty to be deposited, or investigation to be resumed.'' Tariff Act of 1930, as amended, § 751(a), 19 U.S.C. § 1675(a) (emphasis added).

Thus, the request which requires the Department to conduct an administrative review, is a request for a ''review of amount of duty,'' not a request for a review solely of the amount of estimated duty to be deposited. Further, upon a request for ''such a review,'' the Department is directed to conduct at section 751(a)(1)(B) is also a review of ''the amount of any antidumping duty.'' There is no requirement here, either, that the Department independently review the amount of the estimated duty deposit. Rather, the review is to be conducted ''in accordance with paragraph (2).'' Section 751(a)(2) of the Act specifies that, for the purposes of a review under section 751(a)(1)(B), the Department shall determine ''the normal value and export price (or constructed export price) of each entry of the subject merchandise, and * * * the dumping margin for each such entry.'' 19 U.S.C. § 1675(A)(2)(A)(I) (emphasis added). In addition, section 1675(a)(2)(C) requires that these determinations shall be the basis for both the assessment of antidumping duties and the deposit of estimated antidumping duties. Because Hylsa had no consumption entries during the POR, any margin which were to be calculated based upon Hylsa's sales during the POR would not be applied to any entries. Thus, there is no ''amount of duty'' to review, and there is no requirement under section 751(a) for the Department to grant Hylsa's request for review for the sole purpose of reviewing the rate of estimated duty deposit. We note that the Department clearly stated, in the notice of opportunity to request a review of the antidumping order on OCTG, that a review would be initiated based on ''a request for review of entries covered by an order or finding listed in this notice and for the period identified above * * *'' *Antidumping or Countervailing Duty Order, Finding, or Suspended Investigation; Opportunity to Request Administrative Review*, 61 FR 41,768, at 41,771 (August 12, 1996) (emphasis added).

Hylsa has entries during the 1996–1997 POR and can request a review of those entries during the appropriate anniversary month. To the extent that the ''all others'' cash deposit rate exceeds Hylsa's calculated margin for those 1996–1997 entries, it will receive a refund, with interest.

Hylsa also argues that the Department's regulations require that we conduct a review at this time in order to allow them to obtain a company-specific duty deposit rate. Hylsa contends that Section 353.22 of the regulations states that the Department ''will'' conduct a review and issue preliminary and final results whenever a timely request for review has been made. Hylsa's regulatory argument suffers from the same flaw as its statutory argument. Section 353.22 construes the administrative review provisions of the statute; thus, the review provided for is the same review of antidumping duty referred to in the statute. The regulatory provisions of Section 353.22(c) relied on by Hylsa deal with procedural time deadlines for initiation, verification, and issuance of preliminary and final determinations in such reviews of antidumping duty, and create no new rights to reviews for other purposes.

Finally, Hylsa argues that the Department's practice of reviewing sales during the POR requires that it conduct a review of sales during the 1995–1996 POR despite the fact that it had no entries during that period. We note, however, that the Department's AD questionnaire clearly instructed respondents to report U.S. sales entered during the POR. Thus, with respect to this case the Department's intent was always to review entries rather than sales. Respondent never raised its lack of entries as an issue for the Department's consideration prior to the submission of its response.

The administrative and judicial precedents cited by Hylsa in its comments of December 26 are not on point. These cases support the proposition that Commerce can base its margin calculation on sales during the POR rather than entries during the POR; they do not address whether any review at all may proceed in the absence of any entries to which the resultant margin would be applied. In *Portable Electric Typewriters from Japan*, 56 FR 56393, 56397 (Nov. 4, 1991), Commerce analyzed sales during the POR, but applied the results to entries during the POR. *Color Picture Tubes from Japan*, 55 FR 37915, 37917–18 (September 14, 1990), *Gray Portland Cement from Mexico*, 58 FR 25803, 25807 (Apr. 28, 1993), and *Forklift Trucks from Japan*, 57 FR 3167, 3177–78 (January 28, 1992) all stand only for the principle that there need not be an exact correspondence between the sales upon which the margin calculation is based and the entries to which that margin calculation is applied for assessment purposes. As noted above, this corresponds to the Department's position regarding which sales it will review in calculating a margin for assessment purposes; these cases also do not address whether a review may proceed in the absence of any entries to which the resultant margin would be applied. Finally, *Asahi Chemical* v. *United States*, 548 F. Supp. 1261 (CIT 1982), does not address the question

raised by Hylsa's request for a sales-based no-entry review, because it construed an earlier version of the statute which required that the Department review every case every year. Judicial speculation as to how Congress might have dealt with the problem of conducting a statutorily required review in a case in which there were no entries is no longer relevant, now that such reviews are no longer required by law.

Because petitioners have withdrawn their request for review of all parties for which review was requested for the 95–96 POR, and because the only remaining firm requesting review (Hylsa) made no entries into the customs territory of the United States during that POR, the Department is therefore terminating this review.

**Notification of Interested Parties**

This notice also serves as a reminder to parties subject to administrative protective order (APO) of their responsibility concerning the disposition of proprietary information disclosed under APO in accordance with 19 CFR § 353.34(d). Timely written notification of return/destruction of APO materials or conversion to judicial protective order is hereby requested. Failure to comply with the regulations and the terms of an APO is a sanctionable violation. Timely written notification of the return/destruction of APO materials or conversion to judicial protective order is hereby requested.

This administrative review and notice are in accordance with Section 751 (a)(1) of the Tariff Act (19 U.S.C. § 1675(a)(1)) and 19 CFR § 353.22.

Dated: April 14, 1997.

**Joseph A. Spetrini,**

*Deputy Assistant Secretary, Enforcement Group III.*

[FR Doc. 97–10243 Filed 4–18–97; 8:45 am]

BILLING CODE 3510–DS–P

## COMMODITY FUTURES TRADING COMMISSION

### Sunshine Act Meeting

**AGENCY HOLDING THE MEETING:** Commodity Futures Trading Commission.

**TIME AND DATE:** 2:00 p.m., Monday, May 5, 1997.

**PLACE:** 1155 21st St., N.W., Washington, D.C., 9th Fl. Conference Room.

**STATUS:** Closed.

**MATTERS TO BE CONSIDERED:** Adjudicatory Matters.

**CONTACT PERSON FOR MORE INFORMATION:** Jean A. Webb, (202) 418–5100.

**Jean A. Webb,**

*Secretary of the Commission.*

[FR Doc. 97–10346 Filed 4–17–97; 1:18 pm]

BILLING CODE 6351–01–M

## COMMODITY FUTURES TRADING COMMISSION

### Sunshine Act Meeting

**AGENCY HOLDING THE MEETING:** Commodity Futures Trading Commission.

**TIME AND DATE:** 2:00 p.m., Monday, May 12, 1997.

**PLACE:** 1155 21st St., N.W., Washington, D.C., 9th Fl. Conference Room.

**STATUS:** Closed.

**MATTERS TO BE CONSIDERED:** Adjudicatory Matters.

**CONTACT PERSON FOR MORE INFORMATION:** Jean A. Webb, 202–418–5100.

**Jean A. Webb,**

*Secretary of the Commission.*

[FR Doc. 97–10347 Filed 4–17–97; 1:18 pm]

BILLING CODE 6351–01–M

## COMMODITY FUTURES TRADING COMMISSION

### Sunshine Act Meeting

**AGENCY HOLDING THE MEETING:** Commodity Futures Trading Commission.

**TIME AND DATE:** 2:00 p.m., Monday, May 19, 1997.

**PLACE:** 1155 21st St., N.W., Washington, D.C., 9th Fl. Conference Room.

**STATUS:** Closed.

**MATTERS TO BE CONSIDERED:** Adjudicatory Matters.

**CONTACT PERSON FOR MORE INFORMATION:** Jean A. Webb, 202–418–5100.

**Jean A. Webb,**

*Secretary of the Commission.*

[FR Doc. 97–10348 Filed 4–17–97; 1:18 pm]

BILLING CODE 6351–01–M

## COMMODITY FUTURES TRADING COMMISSION

### Sunshine Act Meeting

**AGENCY HOLDING THE MEETING:** Commodity Futures Trading Commission.

**TIME AND DATE:** 2:00 p.m., Tuesday, May 27, 1997.

**PLACE:** 1155 21st St., NW., Washington, DC, 9th Fl. Conference Room.

**STATUS:** Closed.

**MATTERS TO BE CONSIDERED:** Adjudicatory Matters.

**CONTACT PERSON FOR MORE INFORMATION:** Jean A. Webb, 202–418–5100.

**Jean A. Webb,**

*Secretary of the Commission.*

[FR Doc. 97–10349 Filed 4–17–97; 1:18 pm]

BILLING CODE 6351–01–M

## COMMODITY FUTURES TRADING COMMISSION

### Sunshine Act Meeting

**AGENCY HOLDING THE MEETING:** Commodity Futures Trading Commission.

**TIME AND DATE:** 11:00 a.m., Friday, May 2, 1997.

**PLACE:** 1155 21st St., NW., Washington, DC 9th Fl. Conference Room.

**STATUS:** Closed.

**MATTERS TO BE CONSIDERED:** Surveillance Matters.

**CONTACT PERSON FOR MORE INFORMATION:** Jean A. Webb, 202–418–5100.

**Jean A. Webb,**

*Secretary of the Commission.*

[FR Doc. 97–10350 Filed 4–17–97; 1:18 pm]

BILLING CODE 6351–01–M

## COMMODITY FUTURES TRADING COMMISSION

### Sunshine Act Meeting

**AGENCY HOLDING THE MEETING:** Commodity Futures Trading Commission.

**TIME AND DATE:** 11:00 a.m., Friday, May 9, 1997.

**PLACE:** 1155 21st St., NW., Washington, DC, 9th Fl. Conference Room.

**STATUS:** Closed.

**MATTERS TO BE CONSIDERED:** Surveillance Matters.

**CONTACT PERSON FOR MORE INFORMATION:** Jean A. Webb, 202–418–5100.

**Jean A. Webb,**

*Secretary of the Commission.*

[FR Doc. 97–10351 Filed 4–17–97; 1:18 pm]

BILLING CODE 6351–01–M

## COMMODITY FUTURES TRADING COMMISSION

### Sunshine Act Meeting

**AGENCY HOLDING THE MEETING:** Commodity Futures Trading Commission.

**TIME AND DATE:** 11:00 a.m., Friday, May 16, 1997.

**PLACE:** 1155 21st St., NW., Washington, DC, 9th Fl. Conference Room.

**STATUS:** Closed.

**MATTERS TO BE CONSIDERED:** Surveillance Matters.

**CONTACT PERSON FOR MORE INFORMATION:** Jean A. Webb, 202–418–5100.

**Jean A. Webb,**

*Secretary of the Commission.*

[FR Doc. 97–10352 Filed 4–17–97; 1:18 pm]

BILLING CODE 6351–01–M

---

## COMMODITY FUTURES TRADING COMMISSION

### Sunshine Act Meeting

**AGENCY HOLDING THE MEETING:** Commodity Futures Trading Commission.

**TIME AND DATE:** 11:00 a.m., Friday, May 23, 1997.

**PLACE:** 1155 21st St., N.W., Washington, D.C., 9th Fl. Conference Room.

**STATUS:** Closed.

**MATTERS TO BE CONSIDERED:** Surveillance Matters.

**CONTACT PERSON FOR MORE INFORMATION:** Jean A. Webb, 202–418–5100.

**Jean A. Webb,**

*Secretary of the Commission.*

[FR Doc. 97–10353 Filed 4–17–97; 1:18 pm]

BILLING CODE 6351–01–M

---

## COMMODITY FUTURES TRADING COMMISSION

### Sunshine Act Meeting

**AGENCY HOLDING THE MEETING:** Commodity Futures Trading Commission.

**TIME AND DATE:** 11:00 a.m., Friday, May 30, 1997.

**PLACE:** 1155 21st St., N.W., Washington, D.C., 9th Fl. Conference Room.

**STATUS:** Closed.

**MATTERS TO BE CONSIDERED:** Surveillance Matters.

**CONTACT PERSON FOR MORE INFORMATION:** Jean A. Webb, 202–418–5100.

**Jean A. Webb,**

*Secretary of the Commission.*

[FR Doc. 97–10354 Filed 4–17–97; 1:18 pm]

BILLING CODE 6351–01–M

---

## DEPARTMENT OF DEFENSE

## GENERAL SERVICES ADMINISTRATION

## NATIONAL AERONAUTICS AND SPACE ADMINISTRATION

**[OMB Control No. 9000–0113]**

### Proposed Collection; Comment Request Entitled Acquisition of Helium

**AGENCIES:** Department of Defense (DOD), General Services Administration (GSA), and National Aeronautics and Space Administration (NASA).

**ACTION:** Notice of request for public comments regarding an extension to an existing OMB clearance (9000–0113).

**SUMMARY:** Under the provisions of the Paperwork Reduction Act of 1995 (44 U.S.C. Chapter 35), the Federal Acquisition Regulation (FAR) Secretariat will be submitting to the Office of Management and Budget (OMB) a request to review and approve an extension of a currently approved information collection requirement concerning Acquisition of Helium.

**DATES:** *Comment Due Date:* June 20, 1997.

**ADDRESSES:** Comments regarding this burden estimate or any other aspect of this collection of information, including suggestions for reducing this burden, should be submitted to: FAR Desk Officer, OMB, Room 10102, NEOB, Washington, DC 20503, and a copy to the General Services Administration, FAR Secretariat, 1800 F Streets, NW., Room 4037, Washington, DC 20405. Please cite OMB Control No. 9000–0113 in all correspondence.

**FOR FURTHER INFORMATION CONTACT:** Linda Klein, Office of Federal Acquisition Policy, GSA (202) 501–3755.

**SUPPLEMENTARY INFORMATION:**

### A. Purpose

The Helium Act (Pub. L. 86–777) (50 U.S.C. 167a, *et seq.*) and the Department of the Interior's implementing regulations (30 CFR Parts 601 and 602) require Federal agencies to procure all major helium requirements from the Bureau of Land Management, Department of the Interior.

It has been the Department of the Interior's policy, consistent with Congressional intent that Government helium be used in Government contracts, and that all Government contracts involving the use of significant amounts of helium require that Government helium be used in performing the contract. The appropriate vehicle for the establishment of requirements pertaining to Government procurement is the Federal Acquisition Regulation (FAR).

Current FAR coverage on the subject references 30 CFR Parts 601 and 602. These are Department of the Interior regulations dealing with helium sales and helium distribution. However, the FAR contains no substantive guidance on procurement of helium and does not require submission of information that will permit the Bureau of Mines to ascertain whether Federal agencies are using Government helium and are requiring in their contracts that Government helium be used in contracted-for work.

The new FAR coverage provides an appropriate level of guidance on the subject, including a requirement that offerors responding to contract solicitations provide information as to their forecast of helium required for performance of the contract.

Such information will facilitate enforcement of the requirements of the Helium Act and the contractual provisions requiring the use of Government helium by agency contractors, in that it will permit corrective action to be taken if the Bureau of Land Management, after comparing helium sales data against helium requirement forecasts, discovers apparent serious discrepancies.

The information is used in administration of certain Federal contracts to ensure contractor compliance with contract clauses. Without the information, the required use of Government helium cannot be monitored and enforced effectively.

### B. Annual Reporting Burden

Public reporting burden for this collection of information is estimated to average .5 hours per response, including the time for reviewing instructions, searching existing data sources, gathering and maintaining the data needed, and completing and reviewing the collection of information.

The annual reporting burden is estimated as follows: *Respondents:* 50; *responses per respondent:* 1; *total annual responses:* 50; *preparation hours per response:* 5; and *total response burden hours:* 25.

### C. Annual Recordkeeping Burden

The annual recordkeeping burden is estimated as follows: *Recordkeepers:* 50; *hours per recordkeeper:* .5; and *total recordkeeping burden hours:* 25.

### Obtaining Copies of Proposals

Requester may obtain a copy of the justification from the General Services Administration, FAR Secretariat (VRS), Room 4037, 1800 F Street, NW., Washington, DC 20405, telephone (202) 501–4755. Please cite OMB Control No. 9000–0113, Acquisition of Helium, in all correspondence.

Dated: April 15, 1997.

**Sharon A. Kiser,**

*FAR Secretariat.*

[FR Doc. 97–10193 Filed 4–18–97; 8:45 am]

BILLING CODE 6820–34–P

---

## DEPARTMENT OF DEFENSE

## GENERAL SERVICES ADMINISTRATION

## NATIONAL AERONAUTICS AND SPACE ADMINISTRATION

**[OMB Control No. 9000–0096]**

## Proposed Collection; Comment Request entitled Patents

**AGENCIES:** Department of Defense (DOD), General Services Administration (GSA), and National Aeronautics and Space Administration (NASA).

**ACTION:** Notice of request for comments regarding an extension to an existing OMB clearance (9000–0096).

**SUMMARY:** Under the provisions of the Paperwork Reduction Act of 1995 (44 U.S.C. Chapter 35), the Federal Acquisition Regulation (FAR) Secretariat will be submitting to the Office of Management and Budget (OMB) a request to review and approve an extension of a currently approved information collection requirement concerning Patents. This OMB clearance currently expires on July 31, 1997.

**FOR FURTHER INFORMATION CONTACT:** Jack O'Neill, Office of Federal Acquisition Policy, GSA (202) 501–3856.

**DATES:** *Comment Due Date*: June 20, 1997.

**ADDRESSES:** Comments regarding this burden estimate or any other aspect of this collection of information, including suggestions for reducing this burden, should be submitted to: FAR Desk Officer, OMB, Room 10102, NEOB, Washington, DC 20503, and a copy to the General Services Administration, FAR Secretariat, 1800 F Street, NW, Room 4037, Washington, DC 20405. Please cite OMB Control No. 9000–0096 in all correspondence.

**SUPPLEMENTARY INFORMATION:**

### A. Purpose

The patent coverage in FAR subpart 27.2 requires the contractor to report each notice of a claim of patent or copyright infringement that came to the contractor's attention in connection with performing a Government contract above a dollar value of $25,000 (sections 27.202–1 and 52.227–2). The contractor is also required to report all royalties anticipated or paid in excess of $250 for the use of patented inventions by furnishing the name and address of licensor, date of license agreement, patent number, brief description of item or component, percentage or dollar rate of royalty per unit, unit price of contract item, and number of units (sections 27.204–1, 52,227–6, and 52.227–9). The information collected is to protect the rights of the patent holder and the interest of the Government.

### B. Annual Reporting Burden

Public reporting burden for this collection of information is estimated to average .5 hours per response, including the time for reviewing instructions, searching existing data sources, gathering and maintaining the data needed, and completing and reviewing the collection of information.

The annual reporting burden is estimated as follows: *Respondents*: 30; *responses per respondent*: 1; *total annual responses*: 30; *preparation hours per response*: .5; and *total response burden hours*:, 15.

### Obtaining Copies of Proposals

Requester may obtain a copy of the justification from the General Services Administration, FAR Secretariat (VRS), Room 4037, 1800 F Street, NW., Washington, DC 20405, telephone (202) 501–4755. Please cite OMB Control No. 9000–0096, Patents, in all correspondence.

Dated: April 14, 1997.

**Sharon A. Kiser,**

*FAR Secretariat.*

[FR Doc. 97–10194 Filed 4–18–97; 8:45 am]

BILLING CODE 6820–EP–P

## DEPARTMENT OF DEFENSE

## GENERAL SERVICES ADMINISTRATION

## NATIONAL AERONAUTICS AND SPACE ADMINISTRATION

**[OMB Control No. 9000–0114]**

## Proposed Collection; Comment Request Entitled Right of First Refusal of Employment

**AGENCIES:** Department of Defense (DOD), General Services Administration (GSA), and National Aeronautics and Space Administration (NASA).

**ACTION:** Notice of request for public comments regarding an extension to an existing OMB clearance (9000–0114).

**SUMMARY:** Under the provisions of the Paperwork Reduction Act of 1995 (44 U.S.C. Chapter 35), the Federal Acquisition Regulation (FAR) Secretariat will be submitting to the Office of Management and Budget (OMB) a request to review and approve an extension of a currently approved information collection requirement concerning Right of First Refusal of Employment. This OMB clearance currently expires on July 31, 1997.

**DATES:** *Comment Due Date:* June 20, 1997.

**ADDRESSES:** Comments regarding this burden estimate or any other aspect of this collection of information, including suggestions for reducing this burden, should be submitted to: FAR Desk Officer, OMB, Room 10102, NEOB, Washington, DC 20503, and a copy to the General Services Administration, FAR Secretariat, 1800 F Street, NW, Room 4037, Washington, DC 20405. Please cite OMB Control No. 9000–0114 in all correspondence.

**FOR FURTHER INFORMATION CONTACT:** Jack O'Neill, Office of Federal Acquisition Policy, GSA (202) 501–3856.

**SUPPLEMENTARY INFORMATION:**

### A. Purpose

Right of First Refusal of Employment is a regulation which establishes policy regarding adversely affected or separated Government employees resulting from the conversion from in-house performance to performance by contract. The policy will enable these employees to have an opportunity to work for the contractor who is awarded the contract.

The information gathered will be used by the Government to gain knowledge of which employees, adversely affected or separated as a result of the contract award, have gained employment with

the contractor within 90 days after contract performance begins.

**B. Annual Reporting Burden**

Public reporting burden for this collection of information is estimated to average *3* hours per response, including the time for reviewing instructions, searching existing data sources, gathering and maintaining the data needed, and completing and reviewing the collection of information.

The annual reporting burden is estimated as follows: *Respondents:* 130; *responses per respondent:* 1; *total annual responses:* 130; *preparation hours per response:* 3; and *total response burden hours:* 390.

**C. Annual Recordkeeping Burden**

The annual recordkeeping burden is estimated as follows: *Recordkeepers:* 100; *hours per recordkeeper:* .5; and *total recordkeeping burden hours:* 50.

**Obtaining Copies of Proposals**

Requester may obtain a copy of the justification from the General Services Administration, FAR Secretariat (VRS), Room 4037, 1800 F Street, NW., Washington, DC 20405, telephone (202) 501–4755. Please cite OMB Control No. 9000–0114, Right of First Refusal of Employment, in all correspondence.

Dated: April 14, 1997.

**Sharon A. Kiser,**

*FAR Secretariat.*

[FR Doc. 97–10195 Filed 4–18–97; 8:45 am]

BILLING CODE 6820–EP–P

## DEPARTMENT OF DEFENSE

### Department of the Army

### Availability of Non-Exclusive, Exclusive, or Partially Exclusive Licensing of U.S. Patent Application Concerning Recombinant F1–V Plague Vaccine

**AGENCY:** U.S. Army Medical Research and Materiel Command, DOD.

**ACTION:** Notice.

**SUMMARY:** In accordance with 38 CFR 404.6, announcement is made of the availability of U.S. Patent Application SN 08/699,716 entitled ''Recombinant F1–V Plague Vaccine,'' filed December 18, 1996. This patent has been assigned to the United States Government as represented by the Secretary of the Army.

**ADDRESSES:** Commander, U.S. Army Medical Research and Materiel Command, Command Judge Advocate, ATTN: MCMR–JA, 504 Scott Street, Fort Detrick, MD 21702–5012.

**FOR FURTHER INFORMATION CONTACT:** Mr. John F. Moran, Patent Attorney, 301–619–7807, Fax 301–619–5034.

**SUPPLEMENTARY INFORMATION:** A recombinant plague vaccine (F1–V) based on a fusion protein composed of the entire capsule protein (F1) and V protein of Yersinia pestis has been developed. Initial preclinical studies in mice have shown this fusion protein when combined with an adjuvant to be efficicacious against fully virulent wild-type and F–1 strains of Yersinia pestis. The vaccine has been tested against both subcutaneous and aerosol challenges, which should mimic the bubonic and pneumonic form of plague. This F1–V vaccine has been shown to be superior to the licensed, whole cell, Plague Vaccine USP in a mouse model. It also offers the advantage of being a defined product which may be less reactogenic than the poorly defined whole cell vaccine. The use of fusion protein offers advantages of producing and purifying a single protein, instead of two separate components, which may result in lower manufacturing costs.

**Gregory D. Showalter,**

*Army Federal Register Liaison Officer.*

[FR Doc. 97–10201 Filed 4–18–97; 8:45 am]

BILLING CODE 3710–08–M

## DEPARTMENT OF EDUCATION

### Notice of Proposed Information Collection Requests

**AGENCY:** Department of Education.

**ACTION:** Notice of proposed information collection requests.

**SUMMARY:** The Director, Information Resources Management Group, invites comments on the proposed information collection requests as required by the Paperwork Reduction Act of 1995.

**DATES:** An emergency review has been requested in accordance with the Act (44 U.S.C. Chapter 3507(j)), since public harm is reasonably likely to result if normal clearance procedures are followed. Approval by the Office of Management and Budget (OMB) has been requested by April 30, 1997. A regular clearance process is also beginning. Interested persons are invited to submit comments on or before June 20, 1997.

**ADDRESSES:** Written comments regarding the emergency review should be addressed to the Office of Information and Regulatory Affairs, Attention: Wendy Taylor, Desk Officer: Department of Education, Office of Management and Budget, 725 17th Street, NW., Room 10235, New Executive Office Building, Washington, D.C. 20503. Requests for copies of the proposed information collection request should be addressed to Patrick J. Sherrill, Department of Education, 7th & D Streets, S.W., Room 5624, Regional Office Building 3, Washington, D.C. 20202–4651. Written comments regarding the regular clearance and requests for copies of the proposed information collection requests should be addressed to Patrick J. Sherrill, Department of Education, 600 Independence Avenue, S.W., Room 5624, Regional Office Building 3, Washington, DC 20202–4651, or should be electronic mailed to the internet address #FIRB@ed.gov, or should be faxed to 202–708–9346.

**FOR FURTHER INFORMATION CONTACT:** Patrick J. Sherrill (202) 708–8196. Individuals who use a telecommunications device for the deaf (TDD) may call the Federal Information Relay Service (FIRS) at 1–800–877–8339 between 8 a.m. and 8 p.m., Eastern time, Monday through Friday.

**SUPPLEMENTARY INFORMATION:** Section 3506(c)(2)(A) of the Paperwork Reduction Act of 1995 (44 U.S.C. Chapter 3506(c)(2)(A) requires that the Director of OMB provide interested Federal agencies and the public an early opportunity to comment on information collection requests. The Office of Management and Budget (OMB) may amend or waive the requirement for public consultation to the extent that public participation in the approval process would defeat the purpose of the information collection, violate State or Federal law, or substantially interfere with any agency's ability to perform its statutory obligations. The Director of the Information Resources Management Group, publishes this notice containing proposed information collection requests at the beginning of the Departmental review of the information collection. Each proposed information collection, grouped by office, contains the following: (1) Type of review requested, e.g., new, revision, extension, existing or reinstatement; (2) Title; (3) Summary of the collection; (4) Description of the need for, and proposed use of, the information; (5) Respondents and frequency of collection; and (6) Reporting and/or Recordkeeping burden. ED invites public comment at the address specified above. Copies of the requests are available from Patrick J. Sherrill at the address specified above.

The Department of Education is especially interested in public comment addressing the following issues: (1) is this collection necessary to the proper

functions of the Department, (2) will this information be processed and used in a timely manner, (3) is the estimate of burden accurate, (4) how might the Department enhance the quality, utility, and clarity of the information to be collected, and (5) how might the Department minimize the burden of this collection on the respondents, including through the use of information technology.

Dated: April 15, 1997.

**Gloria Parker,**

*Director, Information Resources Management Group.*

### Office of Postsecondary Education

*Title:* Economic Hardship Deferment Request Form.

*Abstract:* This form is the means by which a borrower applies for a deferment of repayment of the principal balance on a loan for reasons of economic hardship and by which the lender or loan servicer determines whether a borrower is entitled to the postponement of payments.

*Additional Information:* The Education Department works with a committee, which includes representatives of guaranty agencies, eligible lenders, participating institutions of higher education and organizations involved in student financial assistance, regarding the standardization and simplification of the Federal Family Education Loan (FFEL) Program deferment process. This is one result of these efforts.

*Frequency:* On Occasion.

*Affected Public:* Individuals or households; Business or other for-profit; Not-for-profit institutions.

*Annual Reporting and Recordkeeping Hour Burden:*

Responses: 1,148,818.

Burden Hours: 183,811.

[FR Doc. 97–10198 Filed 4–18–97; 8:45 am]

BILLING CODE 4000–01–P

## DEPARTMENT OF EDUCATION

### Notice of Proposed Information Collection Requests

**AGENCY:** Department of Education.

**ACTION:** Proposed collection; comment request.

**SUMMARY:** The Director, Information Resources Management Group, invites comments on the proposed information collection requests as required by the Paperwork Reduction Act of 1995.

**DATES:** Interested persons are invited to submit comments on or before June 20, 1997.

**ADDRESSES:** Written comments and requests for copies of the proposed information collection requests should be addressed to Patrick J. Sherrill, Department of Education, 600 Independence Avenue, SW., Room 5624, Regional Office Building 3, Washington, DC 20202–4651.

**FOR FURTHER INFORMATION CONTACT:** Patrick J. Sherrill (202) 708–8196. Individuals who use a telecommunications device for the deaf (TDD) may call the Federal Information Relay Service (FIRS) at 1–800–877–8339 between 8 a.m. and 8 p.m., Eastern time, Monday through Friday.

**SUPPLEMENTARY INFORMATION:** Section 3506 of the Paperwork Reduction Act of 1995 (44 U.S.C. Chapter 35) requires that the Office of Management and Budget (OMB) provide interested Federal agencies and the public an early opportunity to comment on information collection requests. OMB may amend or waive the requirement for public consultation to the extent that public participation in the approval process would defeat the purpose of the information collection, violate State or Federal law, or substantially interfere with any agency's ability to perform its statutory obligations. The Director, Information Resources Management Group publishes this notice containing proposed information collection requests prior to submission of these requests to OMB. Each proposed information collection, grouped by office, contains the following: (1) Type of review requested, e.g., new, revision, extension, existing or reinstatement; (2) Title; (3) Summary of the collection; (4) Description of the need for, and proposed use of, the information; (5) Respondents and frequency of collection; and (6) Reporting and/or Recordkeeping burden. OMB invites public comment at the address specified above. Copies of the requests are available from Patrick J. Sherrill at the address specified above.

The Department of Education is especially interested in public comment addressing the following issues: (1) Is this collection necessary to the proper functions of the Department, (2) will this information be processed and used in a timely manner, (3) is the estimate of burden accurate, (4) how might the Department enhance the quality, utility, and clarity of the information to be collected, and (5) how might the Department minimize the burden of this collection on the respondents, including through the use of information technology.

Dated: April 15, 1997.

**Gloria Parker,**

*Director, Information Resources Management Group.*

### Office of Elementary and Secondary Education

*Type of Review:* Revision.

*Title:* Status Report on Homeless Children and Youth from State Educational Agencies under the Stewart B. McKinney Homeless Assistance Act.

*Frequency:* Triennially.

*Affected Public:* Not-for-profit institutions; State, local or Tribal Gov't, SEAs or LEAs.

*Annual Reporting and Recordkeeping Hour Burden:*

Responses: 54.

Burden Hours: 4,590.

*Abstract:* State educational agencies will submit information to the Department regarding numbers and allocations of homeless children and youth, problems relating to the access of appropriate public education and the difficulties in identifying their special needs. The Department will use this information to report to Congress.

[FR Doc. 97–10199 Filed 4–18–97; 8:45 am]

BILLING CODE 4000–01–P

## DEPARTMENT OF ENERGY

### Federal Energy Regulatory Commission

**[Docket No. RP97–171–003]**

### ANR Pipeline Company; Notice of Proposed Changes in FERC Gas Tariff

April 15, 1997.

Take notice that on April 10, 1997, ANR Pipeline Company (ANR) tendered for filing as part of its FERC Gas Tariff, Second Revised Volume No. 1, tariff sheets to be effective June 1, 1997.

ANR states that the purpose of this filing is to submit revised tariff sheets which were previously filed as pro forma sheets and approved in the Commission's order issued February 14, 1997 in Docket No. RP97–171–000 to conform with the GISB Standards incorporated by Order Nos. 587 et al., Standards for Business Practices of Interstate Natural Gas Pipelines. Due to an administrative oversight the revised tariff sheets were omitted from an April 1, 1997 filing tendered in compliance with the February 14, 1997 order. Accordingly, such sheets are tendered in the instant filing in compliance with the Commission's February 14, 1997 order in this docket.

ANR states that copies of the filing have been mailed to all affected

customers and state regulatory commissions.

Any person desiring to protest this filing should file a protest with the Federal Energy Regulatory Commission, 888 First Street, N.E., Washington, D.C. 20426, in accordance with Section 385.211 of the Commission's Rules and Regulations. All such protests must be filed on or before April 30, 1997. Protests will be considered by the Commission in determining the appropriate action to be taken, but will not serve to make protestants parties to the proceeding. Copies of this filing are on file with the Commission and are available for public inspection in the Public Reference Room.

**Lois D. Cashell,**

*Secretary.*

[FR Doc. 97–10177 Filed 4–18–97; 8:45 am]

BILLING CODE 6717–01–M

---

## DEPARTMENT OF ENERGY

### Federal Energy Regulatory Commission

**[Docket No. ER97–1621–000]**

### Columbia Energy Services Corporation; Notice of Issuance of Order

April 16, 1997.

Columbia Energy Services Corporation (CESC) submitted for filing a rate schedule under which CESC will engage in wholesale electric power and energy transactions as a marketer. CESC also requested waiver of various Commission regulations. In particular, CESC requested that the Commission grant blanket approval under 18 CFR Part 34 of all future issuances of securities and assumptions of liability by CESC.

On March 28, 1997, pursuant to delegated authority, the Director, Division of Applications, Office of Electric Power Regulation, granted requests for blanket approval under Part 34, subject to the following:

Within thirty days of the date of the order, any person desiring to be heard or to protest the blanket approval of issuances of securities or assumptions of liability by CESC should file a motion to intervene or protest with the Federal Energy Regulatory Commission, 888 First Street, N.E., Washington, D.C. 20426, in accordance with Rules 211 and 214 of the Commission's Rules of Practice and Procedure (18 CFR 385.211 and 385.214).

Absent a request for hearing within this period, CESC is authorized to issue securities and assume obligations or liabilities as a guarantor, endorser, surety, or otherwise in respect of any security of another person; provided that such issuance or assumption is for some lawful object within the corporate purposes of the applicant, and compatible with the public interest, and is reasonably necessary or appropriate for such purposes.

The Commission reserves the right to require a further showing that neither public nor private interests will be adversely affected by continued approval of CESC's issuances of securities or assumptions of liability.

Notice is hereby given that the deadline for filing motions to intervene or protests, as set forth above, is April 28, 1997. Copies of the full text of the order are available from the Commission's Public Reference Branch, 888 First Street, N.E., Washington, D.C. 20426.

**Lois D. Cashell,**

*Secretary.*

[FR Doc. 97–10215 Filed 4–18–97; 8:45 am]

BILLING CODE 6717–01–M

---

## DEPARTMENT OF ENERGY

### Federal Energy Regulatory Commission

**[Docket Nos. CP96–128–000 and RP97–231–000]**

### Eastern Shore Natural Gas Company; Notice of Technical Conference

April 15, 1997.

Take notice that a technical conference will be convened in the above-docketed proceeding on Thursday, April 24, 1997, at 9:30 a.m., in a room to be designated at the offices of the Federal Energy Regulatory Commission, 888 First Street, N.E., Washington, DC, 20426. Any party, as defined in 18 CFR 385.10(c), any person seeking intervenor status pursuant to 18 CFR 385.214, and any participant, as defined in 18 CFR 385.102(b), is invited to participate.

For additional information, please contact Carolyn Van Der Jagt, 202–208–2246, or Tom Gooding, 202–208–1123, at the Commission.

**Lois D. Cashell,**

*Secretary.*

[FR Doc. 97–10167 Filed 4–18–97; 8:45 am]

BILLING CODE 6717–01–M

---

## DEPARTMENT OF ENERGY

### Federal Energy Regulatory Commission

**[Docket Nos. RP97–32–000 and CP97–128–000]**

### Eastern Shore Natural Gas Company; Notice of Informal Settlement Conference

April 15, 1997.

Take notice that an informal settlement conference in this proceeding will be convened on Thursday, April 24, 1997, at 1:00 p.m. The settlement conference will be held at the offices of the Federal Energy Regulatory Commission, 888 First Street, N.E., Washington, D.C. 20426, for the purpose of exploring the possible settlement of the above referenced dockets.

Any party, as defined by 18 CFR 385.102(c), or any participant as defined in 18 CFR 385.102(b), is invited to attend. Persons wishing to become a party must move to intervene and receive intervenor status pursuant to the Commission's regulations (18 CFR 385.214).

For additional information, contact Thomas J. Burgess at (202) 208–2058 or Robert A. Young at (202) 208–5705.

**Lois D. Cashell,**

*Secretary.*

[FR Doc. 97–10175 Filed 4–18–97; 8:45 am]

BILLING CODE 6717–01–M

---

## DEPARTMENT OF ENERGY

### Federal Energy Regulatory Commission

**[Docket No. RP97–328–000]**

### Florida Gas Transmission Company; Notice of Compliance Filing

April 15, 1997.

Take notice that on April 10, 1997, Florida Gas Transmission Company (FGT) tendered for filing as part of its FERC Gas Tariff, Third Revised Volume No. 1 the following tariff sheets, with an effective date of May 10, 1997:

Title Page
Seventh Revised Sheet No. 1
First Revised Sheet No. 7
Original Sheet No. 7A
Original Sheet No. 7B
Original Sheet No. 135A

FGT states that on September 28, 1995 and February 29, 1996 the Commission issued Order Nos. 582 and 582–A, respectively, which, among other things, contained provisions addressing the composition of interstate natural gas pipeline tariffs. FGT's Tariff was

generally in compliance with the provisions of these Orders, and FGT has made various previous filings which satisfied certain other requirements. In the instant filing, FGT is proposing certain revisions to its tariff which bring the tariff into compliance with the remaining requirements of the Orders. Specifically, in compliance with Section 154.102, FGT is adding to its Title Page telephone and facsimile numbers and a reference to FGT's superseded Second Revised Volume Number 1.

Additionally, in compliance with Section 154.104, FGT is adding alphanumeric descriptions to Rate Schedules on FGT's Table of Contents. The Table of Contents also has been modified to reflect that the rate for service under Rate Schedule NNTS is contained on Sheet No. 8A. In compliance with Section 154.106, FGT is providing maps showing zone boundaries and individual zones. Lastly, in compliance with Section 154.109(c), FGT is providing a specified order for recognition of discounting.

Any person desiring to be heard or to protest said filing should file a motion to intervene or protest with the Federal Energy Regulatory Commission, 888 First Street, NE, Washington, DC 20426, in accordance with Sections 385.211 and 385.214 of the Commission's Rules and Regulations. All such motions or protests must be filed in accordance with Section 154.210 of the Commission's Regulations. Protests will be considered by the Commission in determining the appropriate action to be taken, but will not serve to make protestants parties to the proceeding. Any person wishing to become a party must file a motion to intervene. Copies of this filing are on file with the Commission and are available for public inspection in the Public Reference Room.

**Lois D. Cashell,**

*Secretary.*

[FR Doc. 97–10179 Filed 4–18–97; 8:45 am]

BILLING CODE 6717–01–M

---

## DEPARTMENT OF ENERGY

### Federal Energy Regulatory Commission

**[Docket No. RP96–172–003]**

### Koch Gateway Pipeline Company; Notice of Compliance Filing

April 15, 1997.

Take notice that on April 11, 1997, Koch Gateway Pipeline Company (Koch) tendered for filing as part of its FERC Gas Tariff, Fifth Revised Volume No. 1, the following revised tariff sheet to be effective April 12, 1996:

Fourth Sub First Revised Sheet No. 1408

Koch states that this revised tariff sheet is being filed to comply with the Commission's Letter Order issued March 28, 1997 in Docket No. RP96–172–005. As directed, Koch revised the tariff sheet to add the sub-docket number to the bottom margin of the above referenced tariff sheet.

Any person desiring to protest said filing should file a protest with the Federal Energy Regulatory Commission, 888 First Street, NE. Washington, DC 20426, in accordance with Section 385.211 of the Commission's regulations. All such protests must be filed in accordance with Section 154.210 of the Commission's Regulations. Protests will be considered by the Commission in determining appropriate action to be taken, but will not serve to make protestants parties to the proceedings. Copies of this filing are on file with the Commission and are available for public inspection.

**Lois D. Cashell,**

*Secretary.*

[FR Doc. 97–10170 Filed 4–18–97; 8:45 am]

BILLING CODE 6717–01–M

---

## DEPARTMENT OF ENERGY

### Federal Energy Regulatory Commission

**[Docket No. RP97–327–000]**

### Koch Gateway Pipeline Company; Notice of Proposed Changes in FERC Gas Tariff

April 15, 1997.

Take notice that on April 10, 1997 Koch Gateway Pipeline Company (Koch) tendered for filing as part of its FERC Gas Tariff, Volume No. 1, the following tariff sheet, to become effective May 10, 1997:

Fifth Revised Volume No. 1
First Revised Sheet No. 1407

Koch states that it is filing the proposed tariff sheet to revise Section 7.4 of its General Terms and Conditions. The proposed changes would allow Koch to accept shippers' request for service in advance of the 90 day limit under certain specific circumstances.

Koch also states that it has serviced copies of this filing upon each affected customer, state commission, and interested parties.

Any person desiring to be heard or to protest this filing should file a motion to intervene or protest with the Federal Energy Regulatory Commission, 888 First Street, N.E., Washington, D.C. 20426, in accordance with Sections 385.214 and 385.211 of the Commission's Rules and Regulations. All such motions or protests must be filed as provided by Section 154.210 of the Commission's Regulations. Protests will be considered by the Commission in determining the appropriate action to be taken, but will not serve to make protestants parties to the proceeding. Any person wishing to become a part must file a motion to intervene. Copies of this filing are on file with the Commission and are available for public inspection in the Public Reference Room.

**Lois D. Cashell,**

*Secretary.*

[FR Doc. 97–10178 Filed 4–18–97; 8:45 am]

BILLING CODE 6717–01–M

---

## DEPARTMENT OF ENERGY

### Federal Energy Regulatory Commission

**[Docket Nos. RP97–1–006 and RP97–201–003]**

### National Fuel Gas Supply Corporation; Notice of Compliance Filing

April 15, 1997.

Take notice that on April 10, 1997, National Fuel Gas Supply Corporation (National Fuel) tendered for filing as part of its FERC Gas Tariff, Third Revised Volume No. 1, the revised tariff sheets listed on Appendix A to the filing, to be effective April 1, 1997.

National Fuel states that the purpose of this filing is to submit tariff sheets revised to comply with the Commission's Order on Compliance Filing issued March 26, 1997, in Docket Nos. RP97–1–004, RP97–201–000, RP97–201–001 and RP97–201–002.

National Fuel states that it is serving copies of this filing with its firm customers, interested state commissions and each person designated on the official service list compiled by the Secretary. Copies are also being served on all interruptible customers as of the date of the filing.

Any person desiring to protest this filing should file a protest with the Federal Energy Regulatory Commission, 888 First Street, N.E., Washington, D.C. 20426, in accordance with Rule 385.211 of the Commission's Rules of Practice and Procedure (18 CFR 385.211). All such protests must be filed in accordance with Section 154.210 of the Commission's Regulations. Protests will be considered by the Commission in determining the appropriate action to be taken, but will not serve to make

protestants parties to the proceeding. Copies of this filling are on file with the Commission and are available for public inspection.

**Lois D. Cashell,**

*Secretary.*

[FR Doc. 97–10171 Filed 4–18–97; 8:45 am]

BILLING CODE 6717–01–M

## DEPARTMENT OF ENERGY

## Federal Energy Regulatory Commission

**[Docket No. RP97–17–004]**

## Northern Natural Gas Company; Notice of Compliance Filing

April 15, 1997.

Take notice that on April 10, 1997, Northern Natural Gas Company (Northern), tendered for filing to become part of Northern's FERC Gas Tariff the following tariff sheets proposed to become effective on April 1, 1997:

**Fifth Revised Volume No. 1**

First Revised Original Sheet No. 204
Substitute Third Revised Sheet No. 265

Northern states that this filing is made in compliance with the Commission's Order issued March 26, 1997 in Docket No. RP97–17–003, which is Northern's GISB proceeding.

Northern states that copies of the filing were served upon Northern's customers and interested State Commissions.

Any person desiring to protest said filing should file a protest with the Federal Energy Regulatory Commission, 888 First Street, NE., Washington, DC 20426, in accordance with Section 385.211 of the Commission's Rules and Regulations. All such protests must be filed in accordance with Section 154.210 of the Commission's Regulations. Protests will be considered by the Commission in determining the appropriate action to be taken in this proceeding, but will not serve to make protestant a party to the proceeding. Copies of this filing are on file with the Commission and are available for inspection.

**Lois D. Cashell,**

*Secretary.*

[FR Doc. 97–10173 Filed 4–18–97; 8:45 am]

BILLING CODE 6717–01–M

## DEPARTMENT OF ENERGY

## Federal Energy Regulatory Commission

**[Docket No. ER97–1548–000]**

## Power Marketing Coal Services, Inc.; Notice of Issuance of Order

April 16, 1997.

Power Marketing Coal Services, Inc. (PMCS) submitted for filing a rate schedule under which PMCS will engage in wholesale electric power and energy transactions as a marketer. PMCS also requested waiver of various Commission regulations. In particular, PMCS requested that the Commission grant blanket approval under 18 CFR Part 34 of all future issuances of securities and assumptions of liability by PMCS.

On March 28, 1997, pursuant to delegated authority, the Director, Division of Applications, Office of Electric Power Regulation, granted requests for blanket approval under Part 34, subject to the following:

Within thirty days of the date of the order, any person desiring to be heard or to protest the blanket approval of issuances of securities or assumptions of liability by PMCS should file a motion to intervene or protest with the Federal Energy Regulatory Commission, 888 First Street, N.E., Washington, D.C. 20426, in accordance with Rules 211 and 214 of the Commission's Rules of Practice and Procedure (18 CFR 385.211 and 385.214).

Absent a request for hearing within this period, PMCS is authorized to issue securities and assume obligations or liabilities as a guarantor, endorser, surety, or otherwise in respect of any security of another person; provided that such issuance or assumption is for some lawful object within the corporate purposes of the applicant, and compatible with the public interest, and in reasonably necessary or appropriate for such purposes.

The Commission reserves the right to require a further showing that neither public nor private interests will be adversely affected by continued approval of PMCS's issuances of securities or assumptions of liability.

Notice is hereby given that the deadline for filing motions to intervene or protests, as set forth above, is April 28, 1997. Copies of the full text of the order are available from the Commission's Public Reference Branch, 888 First Street, N.E. Washington, D.C. 20426.

**Lois D. Cashell,**

*Secretary.*

[FR Doc. 97–10214 Filed 4–18–97; 8:45 am]

BILLING CODE 6717–01–M

## DEPARTMENT OF ENERGY

## Federal Energy Regulatory Commission

**[Docket No. CP97–330–000]**

## Questar Pipeline Company; Notice of Application

April 15, 1997.

Take notice that on April 9, 1997, Questar Pipeline Company (Questar), 79 South State Street, Salt Lake City, Utah 84111, filed in Docket No. CP97–330–000 an application pursuant to Section 7(b) of the Natural Gas Act for permission and approval to, (1) Abandon by transfer certain jurisdictional transmission pipeline, compression and related facilities to Questar Gas Management Company (QGM), an affiliate of Questar, and (2) abandon by removal one jurisdictional compressor and one delivery/receipt point, all as more fully set forth in the application on file with the Commission and open to public inspection.

Questar proposes to abandon by transfer to QGM facilities consisting of, (1) Nine jurisdictional laterals and a portion of a tenth, varying in length between 0.07 and 26.69 miles and in diameter between 4.5 and 10.75 inches, (2) an 8.5-mile portion of 6-inch and 14-inch Main Line No. 68, (3) the Dove Creek Compressor Station consisting of an 818 hp reciprocating compressor, (4) an 800 hp reciprocating compressor located at the Rabbit Mountain Compressor Station and (5) miscellaneous related facilities, including the South Baxter Camp, eight measuring and regulating stations, two sphere launchers, two sphere receivers, three dehydration units, a slug catcher, a heater and associated valves and station piping. The facilities proposed to be transferred to QGM are located in 11 areas Wyoming and Colorado. Questar states that the gross book value of the facilities as of September 30, 1996 totaled $4,135,183 and that upon receipt of the requested authorization, QGM will own and operate these facilities as part of its existing nonjurisdictional gathering system.

In addition, Questar proposes to abandon by removal, (1) A 600 hp reciprocating compressor located at its Rabbit Mountain Compressor Station, thereby completing the abandonment of

the entire station, and (2) one delivery/receipt point located at the eastern terminus of Main Line No. 68. Both facilities are located in Colorado. Questar states that as of September 30, 1996 the gross book value of facilities proposed to be abandoned by removal totaled $420,279.

Questar states that the proposed transfer will not adversely affect its ability to continue to provide jurisdictional open access transportation and storage service to its transportation and storage customers.

Any person desiring to be heard or to make any protest with reference to said application should on or before May 6, 1997, file with the Federal Energy Regulatory Commission, 888 First Street, N.E., Washington, D.C. 20426, a motion to intervene or a protest in accordance with the requirements of the Commission's Rules of Practice and Procedure (18 CFR 385.214 or 385.211) and the Regulations under the Natural Gas Act (18 CFR 157.10). All protests filed with the Commission will be considered by it in determining the appropriate action to be taken but will not serve to make the protestants parties to the proceeding. Any person wishing to become a party to a proceeding or to participate as a party in any hearing therein must file a motion to intervene in accordance with the Commission's Rules.

Take further notice that, pursuant to the authority contained in and subject to the jurisdiction conferred upon the Federal Energy Regulatory Commission by Sections 7 and 15 of the Natural Gas Act and the Commission's Rules of Practice and Procedure, a hearing will be held without further notice before the Commission or its designee on this application if no motion to intervene is filed within the time required herein, if the Commission on its own review of the matter finds that permission and approval for the proposed abandonment are required by the public convenience and necessity. If a motion for leave to intervene is timely filed, or if the Commission on its own motion believes that a formal hearing is required, further notice of such hearing will be duly given.

Under the procedure herein provided for, unless otherwise advised, it will be unnecessary for Questar to appear or be represented at the hearing.

**Lois D. Cashell,**

*Secretary.*

[FR Doc. 97–10168 Filed 4–18–97; 8:45 am]

BILLING CODE 6717–01–M

## DEPARTMENT OF ENERGY

## Federal Energy Regulatory Commission

**[Docket No. RP97–164–001]**

## Texas-Ohio Pipeline, Inc.; Notice of Proposed Changes in FERC Gas Tariff

April 15, 1997.

Take notice that on April 10, 1997, Texas-Ohio Pipeline, Inc. (Texas-Ohio), tendered for filing to become part of its FERC Gas Tariff, Original Volume No. 1, the revised tariff sheets listed in on Appendix A to the filing, to be effective June 1, 1997.

Texas-Ohio states that the purpose of this compliance filing is to conform Texas-Ohio's tariff to the requirements of Order No. 587.

Texas-Ohio further states that copies of this filing have been served on Texas-Ohio's historic customers and public bodies.

Any person desiring to protest should file a protest with the Federal Energy Regulatory Commission, 888 First Street, N.E., Washington, D.C. 20426, in accordance with Section 385.211 of the Commission's Regulations. All such protests must be filed on or before April 30, 1997. Protests will be considered by the Commission in determining the appropriate action to be taken, but will not serve to make protestants parties to the proceeding. Copies of this filing are on file with the Commission and are available for public inspection in the Public Reference Room.

**Lois D. Cashell,**

*Secretary.*

[FR Doc. 97–10176 Filed 4–18–97; 8:45 am]

BILLING CODE 6717–01–M

## DEPARTMENT OF ENERGY

## Federal Energy Regulatory Commission

**[Docket No. RP97–18–005]**

## Transwestern Pipeline Company; Notice of Compliance Filing

April 15, 1997.

Take notice that on April 10, 1997, Transwestern Pipeline Company (Transwestern), tendered for filing to become part of Transwestern's FERC Gas Tariff, the following tariff sheets, proposed to be effective April 1, 1997.

**Second Revised Volume No. 1**

2 Substitute Twelfth Revised Sheet No. 80

**Reason for Filing**

Transwestern states that the instant filing is to (i) change the General Terms and Conditions of Transwestern Pipeline Company's tariff to eliminate the requirement that nominations are to be communicated using Electronic Transmission; and (ii) identify the data elements, as set forth in Attachment A hereto, which have been designated by Transwestern as mutually agreeable (MA) and business conditional (BC).

Transwestern states that copies of the filing were served upon Transwestern's customers and interested State Commissions.

Any person desiring to protest said filing should file a protest with the Federal Energy Regulatory Commission, 888 First Street, N.E., Washington, D.C. 20426, in accordance with Section 385.211 of the Commission's Rules and Regulations. All such protests must be filed in accordance with Section 154.210 of the Commission's Regulations. Protests will be considered by the Commission in determining the appropriate action to be taken in this proceeding, but will not serve to make Protestant a party to the proceeding. Copies of this filing are on file with the Commission and are available for inspection.

**Lois D. Cashell,**

*Secretary.*

[FR Doc. 97–10174 Filed 4–18–97; 8:45 am]

BILLING CODE 6717–01–M

## DEPARTMENT OF ENERGY

## Federal Energy Regulatory Commission

**[Project No. 111553–000]**

## Lace River Hydro; Correction to Notice of Intent to Conduct Environmental Scoping Meetings and a Site Visit

April 15, 1997.

In the notice issued April 7, 1997 (62 FR 17800, April 11, 1997), the following changes should be made:

The scheduled time for the May 1, 1997 joint public and agency scoping meeting should be 10:00 a.m. instead of 12 noon.

The scheduled time for the April 30, 1997 site visit should be 12 noon instead of 10:00 a.m.

**Lois D. Cashell,**

*Secretary.*

[FR Doc. 97–10169 Filed 4–18–97; 8:45 am]

BILLING CODE 6717–01–M

## ENVIRONMENTAL PROTECTION AGENCY

**[FRL–5813–8]**

## Science Advisory Board; Notice of Public Teleconference Meetings

Pursuant to the Federal Advisory Committee Act, Public Law 92–463, notice is hereby given that the Science Advisory Board's (SAB) Advisory Council on Clean Air Compliance Analysis (ACCACA, or the ''Council'') and its Air Quality Models Subcommittee (AQMS) will hold three public teleconference meetings on the dates and times described below. All meetings are open to the public, however, the number of available phone lines is limited. All times noted are Eastern Time. For further information concerning the specific meetings described in this notice, please contact the individuals listed below. Documents that are the subject of SAB reviews are normally available from the originating EPA office and are not available from the SAB Office (see information provided below). These teleconferences are a follow-up to earlier Council discussions held on November 7 & 8, 1996 concerning the 1990 Clean Air Act (CAA) Section 812 Retrospective and Prospective Studies (See 61 FR 54196, Thursday, October 17, 1996, and 62 FR 10045, Wednesday, March 5, 1997, for further information).

### 1. Air Quality Models Subcommittee

The Air Quality Models Subcommittee (AQMS) of the Advisory Council on Clean Air Compliance Analysis (ACCACA, or ''the Council'' will conduct a public teleconference meeting on Monday, May 5, 1997, between the hours of 11:00 a.m. and 1:00 p.m. Eastern Time. The meeting will be coordinated through a conference call connection in Room 2103 of the Mall at the U.S. Environmental Protection Agency, 401 M Street SW, Washington, DC 20460. The public is welcome to attend the meeting physically or through a telephonic link. Additional instructions about how to participate in the conference call can be obtained by calling Ms. Diana L. Pozun at (202) 260–8414 prior to the meeting.

In this meeting the AQMS plans to review the draft documents pertaining to the Clean Air Act (CAA) Section 812 Prospective Study emissions modeling assumptions, methodology, results and documentation. In a previous public teleconference meeting of the Council on March 14, 1997 (See 61 FR 54196, Thursday, October 17, 1996, and 62 FR 10045, Wednesday, March 5, 1997 for further information), the Council advised the Agency staff that the AQMS should review the emissions modeling information before proceeding to conduct any model runs. This forthcoming May 5, 1997 public teleconference of the AQMS is for this purpose.

Any member of the public wishing further information concerning the meeting or who wishes to submit comments should contact Dr. K. Jack Kooyoomjian, Designated Federal Official for the AQMS of the Council, Science Advisory Board (1400), U.S. Environmental Protection Agency, Washington DC 20460; telephone (202) 260–2560; FAX (202) 260–7118; or via the INTERNET at kooyoomjian.jack@epamail.epa.gov.

### 2. Advisory Council on Clean Air Compliance Analysis

The Advisory Council on Clean Air Compliance Analysis (ACCACA, or the ''Council'') of the Science Advisory Board (SAB) plans to hold two public teleconference meetings on the dates and times described below.

(a) *Thursday, May 15, 1997 (11:00 am to 2:00 pm): Prospective Study and Retrospective Study:* The major topic planned for this teleconference is review of the Retrospective Study closure issues. The Council is anticipating receiving a completely revised text of the Clean Air Act (CAA) Section 812 Retrospective Study in April, 1997. The Council anticipates that review of this draft document will be the major topic of the teleconference. If additional time is available, the Council may also discuss the emissions estimates, modeling assumptions, methodology, results and documentation. The revised draft Retrospective Study document, dated April, 1997 is not available from the Science Advisory Board, but may be obtained by contacting Ms. Michelle Olawuyi (see below for ordering information). The Prospective Study emissions estimates draft documents are available from Mr. James DeMocker, Office of Air and Radiation (see below for ordering information).

(b) *Friday, May 16, 1997 (11:00 a.m. to 2:00 p.m.): Prospective Study and Retrospective Study:* The major topics for this teleconference are to complete review of the Prospective Study emissions modeling assumptions, methodology, results and documentation (if more time is needed after the discussions of May 15), and to complete closure review on the Retrospective Study issues. The timing of which specific issues are to be discussed at each teleconference will be planned at the previous (May 15, 1997) teleconference. The Council identified a number of Retrospective Study issue areas, some of which are listed here as follows: valuation of bronchitis and heart disease; presentation of baseline (''but for'' issues, that is, but for the presence of the 1990 Clean Air Act), choice of study for estimating PM-related mortality (includes physical effects); costs (operations and maintenance costs, cost-of-clean, etc.); ecological effects; valuing changes in intelligence quotient (IQ) issues; presentation of life years lost calculations (life years remaining issue); methodological effects; morbidity effects by age; and research needs. Other related issues are planned to be discussed as time permits.

Please contact the SAB staff (see below) to determine the logistics and details of the individual public teleconference meetings, or if the later planned meetings will be necessary.

To discuss technical aspects or obtain copies of the draft documents pertaining to the CAA Section 812 Prospective Study emissions estimates, or the Appendices and select text edits for the Retrospective Study, please contact Mr. James DeMocker, Office of Policy Analysis and Review (OAR) (MC 6103), US Environmental Protection Agency, 401 M Street, SW, Washington, DC 20460. Tel. (202) 260–8980; FAX (202) 260–9766, or via the Internet at: democker.jim@epamail.epa.gov. To obtain copies of the latest complete draft of the Retrospective Study Report to Congress dated April 1997 and entitled ''The Benefits and Costs of the Clean Air Act, 1970 to 1990,'' please contact Ms. Michelle Olawuyi, Secretary, Office of Economy and Environment (MC 2172), US Environmental Protection Agency, 401 M Street, SW, Washington, DC 20460. Tel. (202) 260–5488; FAX (202) 260–5732, or via the Internet at olawuyi.michelle@epamail.epa.gov.

To obtain copies of the teleconference agendas, please contact Mrs. Diana L. Pozun, Secretary to the Council at Tel. (202) 260–8414; FAX (202) 260–7118; or via the Internet: pozun.diana@epamail.epa.gov. To discuss technical or logistical aspects of the Council's review process, please contact Dr. K. Jack Kooyoomjian, Designated Federal Official, Advisory Council on Clean Air Compliance Analysis (the ''Council''), Tel. (202) 260–2560; FAX (202) 260–7118; or via the Internet: kooyoomjian.jack @epamail.epa.gov. Members of the public who wish to physically be present at the teleconferences may do so at the U.S. Environmental Protection Agency (EPA) Headquarters Building,

401 M Street, SW, Washington, DC 20460, Waterside Mall Room Number 2103. Members of the public who wish to obtain teleconference logging-on procedures should contact Mrs. Diana L. Pozun at least one week prior to the teleconference(s) of interest.

**Public Speaking**

To request time for public comments at the Council teleconferences, please contact Mrs. Diana L. Pozun *in writing* at the mail, FAX or E-Mail addresses given above no later than one week prior to each of the teleconferences.

**Providing Oral or Written Comments at SAB Meetings**

The Science Advisory Board (SAB) expects that public statements presented at its meetings will not be repetitive of previously submitted oral or written statements. In general, opportunities for oral comment at teleconference meetings will be usually limited to three minutes per speaker and no more than fifteen minutes total. Written comments (at least 35 copies) received in the SAB Staff Office sufficiently prior to a meeting date (usually one week prior to a meeting), may be mailed to the Council prior to its meeting; comments received too close to the meeting date will normally be provided to the Council at its meeting, except for teleconferences, where brief written materials may be FAXed to the participants, with more detailed or lengthy materials received too close to the teleconference to be mailed to the Council or its appropriate subcommittee participants shortly after the teleconference. Written comments may be provided up until the time of the meeting.

Dated: April 14, 1997.

**Donald G. Barnes,**

*Staff Director, Science Advisory Board.*

[FR Doc. 97–10218 Filed 4–18–97; 8:45 am]

BILLING CODE 6560–50–P

## ENVIRONMENTAL PROTECTION AGENCY

**[OPP–00479; FRL–5713–3]**

## State FIFRA Issues Research and Evaluation Group (SFIREG) Pesticide Operations and Management Working Committee; Open Meeting

**AGENCY:** Environmental Protection Agency (EPA).

**ACTION:** Notice.

**SUMMARY:** The State FIFRA Issues Research and Evaluation Group (SFIREG) Pesticide Operations and Management Working Committee will hold a 2-day meeting, April 28, and 29, 1997. This notice announces the location and times for the meeting and sets forth the tentative agenda topics. The meeting is open to the public.

**DATES:** The SFIREG Working Committee on Pesticide Operations and Management will meet on Monday, April 28, 1997, from 8:30 a.m. to 5 p.m. and Tuesday, April 29, 1997, from 8:30 a.m. to 4 p.m.

**ADDRESSES:** The meeting will be held at: the Quality Inn Midtown Hotel, 870 Peachtree St., Atlanta, GA. 30308.

**FOR FURTHER INFORMATION CONTACT:** By mail: Elaine Y. Lyon, Field and External Affairs Division (7506C), Office of Pesticide Programs, Environmental Protection Agency, 401 M St., SW., Washington, DC 20460. Office location and telephone number and e-mail: Rm. 1101B, Crystal Mall #2, 1921 Jefferson Davis Highway, Arlington, VA.; (703) 305–5306, (703) 308–3259 (fax); e-mail: Lyon.elaine.@epamail.epa.gov.

**SUPPLEMENTARY INFORMATION:** The tentative agenda of the SFIREG Working Committee on Pesticide Operations and Management includes the following:

1. Update on EPA Label Review Manual.
2. Labeling issues related to bees, crop rotation, co-packs and multi-packs.
3. Indemnification/Waiver of liability statements on pesticide labels.
4. Aztec 2.1% label exemption to the restricted entry interval in the worker protection standard.
5. Enforceability of restrictive label statements on herbicides intended for application to herbicide tolerant seed.
6. Air quality concerns and ventilation labeling statements.
7. Custom dilution/custom blend scenarios.
8. Indoor structural pest control concerns.
9. FY 98 Cooperative Agreement Guidance.
10. FQPA Federal and State data requirements.
11. Disinfectant/Antimicrobial inspection and testing program.
12. FIFRA 25(b) exempt products as alternate control methods in section 18 determinations.
13. Liquid chemical sterilants and antimicrobials after FQPA.
14. Use of commodity fumigant methyl bromide for structural fumigation.
15. Other topics as appropriate.

**List of Subjects**

Enviornmental protection.

Dated: April 15, 1997.

**James Jones,**

*Acting Director, Field and External Affairs Division, Office of Pesticides Program.*

[FR Doc. 97–10409 Filed 4–17–97; 2:47 pm]

BILLING CODE 6560–50–F

## ENVIRONMENTAL PROTECTION AGENCY

**[FRL–5813–7]**

## Notice of Proposed Administrative Settlement Pursuant to the Comprehensive Environmental Response, Compensation and Liability Act, as Amended; Enviropur West Corporation Site

**AGENCY:** Environmental Protection Agency.

**ACTION:** Notice, request for public comment.

**SUMMARY:** In accordance with Section 122(i) of the Comprehensive Environmental Response, Compensation and Liability Act of 1980, as amended (''CERCLA''), 42 U.S.C. 9622(i), notice is hereby given of a proposed administrative settlement concerning the Enviropur West Corporation Removal Site located in Signal Hill, California. The United States Environmental Protection Agency (''EPA'') is proposing to enter into this settlement pursuant to Section 122(h) of CERCLA. This proposed settlement is intended to resolve the liabilities under CERCLA of Barrick Gold Corporation, the Burlington Northern and Santa Fe Railroad Company, Carnival Corporation, GATX Tank Storage Terminals Corporation, Kaiser Hill Company LLC Royal Caribbean Cruises Ltd., Union Pacific Railroad Company, Southwest Marine, Texaco Inc., U.S. Air Force, U.S. Navy, U.S. Department of Defense, U.S. Army, U.S. Maritime Administration, National Oceanic and Atmospheric Administration, U.S. Postal Service, National Aeronautics and Space Administration, Federal Aviation Administration, U.S. Department of Justice, U.S. Coast Guard, Department of Veterans Affairs, National Park Service and U.S. Geological Survey for the United States' response costs incurred in conducting removal of above ground waste in containers at the Enviropur West Site. Under the agreement, the Settling Parties are to pay $1.74 million to EPA. For thirty (30) days following the date of publication of this notice, the Agency will receive written comments relating to the settlement. The Agency's

response to any comments received will be available for public inspection at EPA's Region IX offices located at 75 Hawthorne Street, San Francisco, California 94105.

EPA may withdraw or withhold its consent to this settlement if comments received during the 30 day public comment period disclose facts or considerations which indicate the proposed settlement is inappropriate, improper or inadequate.

**DATES:** EPA will receive written comments relating to this proposed settlement on or before May 21, 1997.

**ADDRESSES:** Comments should be addressed to Steve Armsey, Regional Hearing Clerk, U.S. EPA Region IX (ORC–3–1), 75 Hawthorne Street, San Francisco, CA 94105 and should refer to: Enviropur West Corporation Site, Signal Hill, California U.S. Docket No. 97–08. A copy of the proposed Administrative Order on Consent may be obtained from the Regional Hearing Clerk at the address provided above.

**FOR FURTHER INFORMATION CONTACT:** Janet R. Carlson. Assistant Regional Counsel, (415) 744–1345, U.S. Environmental Protection Agency, Region 9, 75 Hawthorne Street, San Francisco, CA 94105.

Dated: April 14, 1997.

**Keith Takata,**

*Director, Superfund Division.*

[FR Doc. 97–10217 Filed 4–18–97; 8:45 am]

BILLING CODE 6760–50–M

## FEDERAL RESERVE SYSTEM

### Change in Bank Control Notices; Acquisitions of Shares of Banks or Bank Holding Companies

The notificants listed below have applied under the Change in Bank Control Act (12 U.S.C. 1817(j)) and § 225.41 of the Board's Regulation Y (12 CFR 225.41) to acquire a bank or bank holding company. The factors that are considered in acting on the notices are set forth in paragraph 7 of the Act (12 U.S.C. 1817(j)(7)).

The notices are available for immediate inspection at the Federal Reserve Bank indicated. Once the notices have been accepted for processing, they will also be available for inspection at the offices of the Board of Governors. Interested persons may express their views in writing to the Reserve Bank indicated for that notice or to the offices of the Board of Governors. Comments must be received not later than May 5, 1997.

**A. Federal Reserve Bank of San Francisco** (Kenneth R. Binning, Director, Bank Holding Company) 101 Market Street, San Francisco, California 94105-1579:

*1. Zubair and Khatija Kazi*, Studio City, California; to acquire up to 34.65 percent, and Yahia and Magda Abdul-Rahman, Pasadena, California, to acquire up to 20.35 percent, of the voting shares of Greater Pacific Bancshares, Whittier, California, and thereby indirectly acquire Bank of Whittier, N.A., Whittier, California.

Board of Governors of the Federal Reserve System, April 15, 1997.

**Jennifer J. Johnson,**

*Deputy Secretary of the Board.*

[FR Doc. 97–10145 Filed 4–18–97; 8:45 am]

BILLING CODE 6210–01–F

## FEDERAL RESERVE SYSTEM

### Notice of Proposals to Engage in Permissible Nonbanking Activities or to Acquire Companies that are Engaged in Permissible Nonbanking Activities

The companies listed in this notice have given notice under section 4 of the Bank Holding Company Act (12 U.S.C. 1843) (BHC Act) and Regulation Y, (12 CFR Part 225) to engage *de novo*, or to acquire or control voting securities or assets of a company that engages either directly or through a subsidiary or other company, in a nonbanking activity that is listed in § 225.25 of Regulation Y (12 CFR 225.25) or that the Board has determined by Order to be closely related to banking and permissible for bank holding companies. Unless otherwise noted, these activities will be conducted throughout the United States.

Each notice is available for inspection at the Federal Reserve Bank indicated. Once the notice has been accepted for processing, it will also be available for inspection at the offices of the Board of Governors. Interested persons may express their views in writing on the question whether the proposal complies with the standards of section 4 of the BHC Act.

Unless otherwise noted, comments regarding the applications must be received at the Reserve Bank indicated or the offices of the Board of Governors not later than May 5, 1997.

**A. Federal Reserve Bank of San Francisco** (Kenneth R. Binning, Director, Bank Holding Company) 101 Market Street, San Francisco, California 94105-1579:

*1. Tehama Bancorp*, Red Bluff, California; to acquire Bancorp Financial Services, Sacramento, California, and thereby engage in leasing activities, pursuant to § 225.25(b)(5) of the Board's Regulation Y.

Board of Governors of the Federal Reserve System, April 14, 1997.

**Jennifer J. Johnson,**

*Deputy Secretary of the Board.*

[FR Doc. 97–10146 Filed 4–18–97; 8:45 am]

BILLING CODE 6210–01–F

## GENERAL SERVICES ADMINISTRATION

### Notice of Public Meeting and Intent To Prepare an Environmental Impact Statement

**AGENCY:** General Services Administration, National Capital Region Patent and Trademark Office.

**ACTION:** Proposed construction and operation of a consolidated Patent and Trademark Office in northern Virginia.

**SUMMARY:** The General Services Administration and the Patent and Trademark Office announce their intent to prepare an Environmental Impact Statement (EIS) for the proposed new consolidated Patent and Trademark Office in northern Virginia and to conduct two public meetings to discuss the proposal pursuant to Section 102(2)(C) of the National Environmental Policy Act (NEPA) of 1969, as implemented by the Council of Environmental Quality regulations (40 CFR Parts 1500–1508), Section 106 of the National Historic Preservation Act of 1966, as amended, and in accordance with the Environmental Policies and Procedures implemented by General Services Administration.

This Notice of Intent (NOI) initiates the formal environmental review/scoping process for this project. A comprehensive Environmental Impact Statement (EIS) is considered to be the appropriate environmental document for this project and it is expected that completion of an EIS will discharge all obligations under Federal environmental laws. Two public meetings will be held to determine the significant issues related to the construction and operation of the new consolidated Patent and Trademark Office. One will be held in Arlington County and one will be held in the City of Alexandria, Virginia. The meetings will serve as part of the formal environmental review/scoping process for the preparation of the EIS that is required for this project. The public is encouraged to submit written comments on the potential impacts of the proposed Patent and Trademark Office buildings at the alternative sites under consideration. The comments and

responses received on the alternatives and potential impacts, as a result of this NOI, will be considered for the environmental document. The public is encouraged to provide additional comments once the Draft EIS is released. The General Services Administration anticipates that release date to be January 1998.

The proposed consolidated Patent and Trademark Office (PTO) will include approximately 2 million square feet in up to eight buildings and will require between 3,500 to 7,000 parking spaces. It is proposed to be located in northern Virginia in either Arlington County or the City of Alexandria and is scheduled to be gully occupied by the year 2004. The EIS will analyze the environmental impacts and mitigation options associated with five alternatives for the construction and operation of the proposed PTO. At present those alternatives may include: (1) construction of the PTO in Arlington at Crystal City between the George Washington Memorial Parkway and Route 1 with 20th Street as the northern boundary and the overpass connecting Route 1 to National Airport as the southern boundary; (2) construction of the PTO in Alexandria in the Potomac Yards/Potomac Greens between the George Washington Memorial Parkway and U.S. Route 1 south of Four Mile Run and north of the Monroe Avenue Bridge; (3) construction of the PTO at the Carlyle site in Alexandria at Dulaney Street and Eisenhower Avenue between Elizabeth Lane and Carlyle Street; (4) construction of the PTO in Alexandria at 2111 Eisenhower Avenue at the Eisenhower Avenue Metro station; and, (5) a No Action Alternative which would not result in a consolidated Patent and Trademark Office in northern Virginia. Topics for environmental analysis will include the short-term impacts of construction; the long-term impacts of site operations and maintenance on land use, historic resources, visual resources, physical-biological resources, public transportation, traffic and parking, public services and utilities, and socio-economic conditions within the project areas; and, the cumulative impacts associated with this and other projects in the future.

**SUPPLEMENTARY INFORMATION:** The public meetings will be held:

Wednesday, June 4, 1997, 7:00 p.m.
Aurora Hills Recreation Center, 735 18th Street, Arlington, Virginia,

Thursday, June 5, 1997, 7:30 p.m.
Alexandria City Hall, 301 King Street, Room 2000, Alexandria, Virginia

Public meetings will be advertised in local and regional newspapers. Adequate signs will be posted to direct meeting participants. A short formal presentation will precede the request for public comments. General Services Administration and the Patent and Trademark Office representatives will be available at this meeting to receive comments from the public regarding issues of concern. It is important that Federal, regional, and local agencies, and interested individuals and groups take this opportunity to identify environmental concerns that should be addressed during the preparation of the Draft EIS. In the interest of available time, each speaker will be asked to limit oral comments to ten (10) minutes. A document summarizing the written and oral comments received will be prepared.

An Informational Packet will be available for review at the public meetings or upon request to the GSA contact identified below. Agencies and the general public are invited and are encouraged to provide written comments on the scoping issues in addition to, or in lieu of oral comments at the public meeting. To the most helpful, environmental review/scoping comments would clearly describe specific issues or topics which the community believes the EIS should address.

**DATES:** All written statements regarding environmental review of the proposed Patent and Trademark Office must be postmarked no later than May 19, 1997 to the following address: General Services Administration, Attn: Carl W. Winters, Property Acquisition and Realty Services (WPEMC), 7th and D Streets, S.W., Washington, D.C. 20407.

**FOR FURTHER INFORMATION PLEASE CONTACT:** Carl W. Winters, General Services Administration, (202) 401–1025. E-mail carl.winters@gsa.gov

Dated: April 14, 1997.

**Douglas G. Benton,**

*Director, Property Acquisition and Realty Services Division, National Capital Region.*

[FR Doc. 97–10244 Filed 4–18–97; 8:45 am]

BILLING CODE 6820–23–M

## DEPARTMENT OF HEALTH AND HUMAN SERVICES

### Centers for Disease Control and Prevention

### National Institute for Occupational Safety and Health; Request for Comments on the Toxicity of Carbonless Copy Paper; Amendment To Extend Comment Period

A notice requesting comments from all interested parties concerning possible adverse health effects among workers who have used carbonless copy paper was published in the **Federal Register** on February 21, 1997 (62 FR 8023).

The notice is amended as follows: On page 8023, first column, under the heading **DATES,** line five, the date for submission of written comments to this notice has been extended from April 22, 1997, to ''on or before June 20, 1997.''

All other information and requirements of the February 21, 1997, **Federal Register** notice remain the same.

Dated: April 15, 1997.

**William E. Halperin,**

*Acting Director, National Institute for Occupational Safety and Health (NIOSH), Centers for Disease Control and Prevention (CDC).*

[FR Doc. 97–10205 Filed 4–18–97; 8:45 am]

BILLING CODE 4163–19–P

## DEPARTMENT OF HEALTH AND HUMAN SERVICES

### Food and Drug Administration

**[Docket No. 97N–0129]**

### Agency Information Collection Activities; Submission for OMB Review; Comment Request

**AGENCY:** Food and Drug Administration, HHS.

**ACTION:** Notice.

**SUMMARY:** The Food and Drug Administration (FDA) is announcing that the proposed collection of information listed below has been submitted to the Office of Management and Budget (OMB) for review and clearance under the Paperwork Reduction Act of 1995 (the PRA).

**DATES:** Submit written comments on the collection of information by May 21, 1997.

**ADDRESSES:** Submit written comments on the collection of information to the Office of Information and Regulatory Affairs, OMB, New Executive Office Bldg., 725 17th St. NW., rm. 10235,

Washington, DC 20503, Attn: Desk Officer for FDA.

**FOR FURTHER INFORMATION CONTACT:** Margaret R. Wolff, Office of Information Resources Management (HFA–250), Food and Drug Administration, 5600 Fishers Lane, rm. 16B–19, Rockville, MD 20857, 301–827–1223.

**SUPPLEMENTARY INFORMATION:** In compliance with section 3507 of the PRA (44 U.S.C. 3507), FDA has submitted the following proposed collection of information to OMB for review and clearance.

### Survey of FDA Safety Alert/Public Health Advisory

Section 705(b) of the Federal Food, Drug, and Cosmetic Act (21 U.S.C. 375(b)) authorizes FDA to disseminate information concerning imminent danger to public health by any regulated product. The Center for Devices and Radiological Health (CDRH) communicates these risks to user communities through two publications: The ''FDA Safety Alert'' and the ''FDA Public Health Advisory.'' Safety alerts and advisories are sent to organizations such as hospitals, nursing homes, hospices, home health care agencies, manufacturers, retail pharmacies, and other health care providers. Subjects of recent alerts include spontaneous combustion risks in large quantities of patient examination gloves, hazards associated with the use of electric heating pads, and retinal photic injuries from operating microscopes during cataract surgery.

Section 1702(a)(4) of the Public Health Services Act (42 U.S.C. 300u(a)(4)) authorizes FDA to conduct research relating to health information. FDA seeks to evaluate the clarity, timeliness and impact of safety alerts and public health advisories by surveying a sample of recipients. Subjects will receive a questionnaire to be completed and returned to FDA. The information to be collected will address how clearly the problem discussed in the alert or advisory is identified, how easily the problem is understood, how clearly actions for reducing risk are explained, the timeliness of the information, and whether the reader has taken any action to eliminate or reduce risk as a result of information in the alert. Subjects will also be asked whether they wish to receive future alerts electronically, as well as how the safety alert program might be improved.

The information collected will be used to shape FDA's editorial policy for the safety alerts and public health advisories. Understanding how target audiences view these publications will aid in deciding what changes should be considered in their content, format, and method of dissemination.

FDA estimates the burden of this collection of information as follows:

ESTIMATED ANNUAL REPORTING BURDEN

| No. of Respondents | Annual Frequency per Response | Total Annual Responses | Hours per Response | Total Hours |
|---|---|---|---|---|
| 308 | 3 | 924 | .17 | 157 |

There are no capital costs or operating and maintenance costs associated with this collection of information.

Based on the history of the safety alert and public health advisory program, it is estimated that an average of three collections will be conducted a year. The total burden of response time was estimated at 10 minutes per survey. This was derived by CDRH staff completing the survey, in addition to discussions with contacts in trade associations.

Dated: April 9, 1997.

**William K. Hubbard,**

*Associate Commissioner for Policy Coordination.*

[FR Doc. 97–10253 Filed 4–18–97; 8:45 am]

BILLING CODE 4160–01–F

---

## DEPARTMENT OF HEALTH AND HUMAN SERVICES

## Food and Drug Administration

**[Docket No. 97E–0047]**

## Determination of Regulatory Review Period for Purposes of Patent Extension; MENTAX

**AGENCY:** Food and Drug Administration, HHS.

**ACTION:** Notice.

**SUMMARY:** The Food and Drug Administration (FDA) has determined the regulatory review period for MENTAX and is publishing this notice of that determination as required by law. FDA has made the determination because of the submission of an application to the Commissioner of Patents and Trademarks, Department of Commerce, for the extension of a patent which claims that human drug product.

**ADDRESSES:** Written comments and petitions should be directed to the Dockets Management Branch (HFA–305), Food and Drug Administration, 12420 Parklawn Dr., rm. 1–23, Rockville, MD 20857.

**FOR FURTHER INFORMATION CONTACT:** Brian J. Malkin, Office of Health Affairs (HFY–20), Food and Drug Administration, 5600 Fishers Lane, Rockville, MD 20857, 301–443–1382.

**SUPPLEMENTARY INFORMATION:** The Drug Price Competition and Patent Term Restoration Act of 1984 (Pub. L. 98–417) and the Generic Animal Drug and Patent Term Restoration Act (Pub. L. 100–670) generally provide that a patent may be extended for a period of up to 5 years so long as the patented item (human drug product, animal drug product, medical device, food additive, or color additive) was subject to regulatory review by FDA before the item was marketed. Under these acts, a product's regulatory review period forms the basis for determining the amount of extension an applicant may receive.

A regulatory review period consists of two periods of time: A testing phase and an approval phase. For human drug products, the testing phase begins when the exemption to permit the clinical investigations of the drug becomes effective and runs until the approval phase begins. The approval phase starts with the initial submission of an application to market the human drug product and continues until FDA grants permission to market the drug product. Although only a portion of a regulatory review period may count toward the actual amount of extension that the Commissioner of Patents and Trademarks may award (for example, half the testing phase must be subtracted as well as any time that may have occurred before the patent was issued), FDA's determination of the length of a regulatory review period for a human drug product will include all of the testing phase and approval phase as specified in 35 U.S.C. 156(g)(1)(B).

FDA recently approved for marketing the human drug product MENTAX (butenafine hydrochloride). MENTAX is indicated for the topical treatment of interdigital tinea pedis (athlete's foot)

due to *Epidermophyton floccosum*, *Trichophyton mentagrophytes*, or *T. rubrum*. Subsequent to this approval, the Patent and Trademark Office received a patent term restoration application for MENTAX (U.S. Patent No. 5,021,458) from Penederm, Inc., and the Patent and Trademark Office requested FDA's assistance in determining this patent's eligibility for patent term restoration. In a letter dated February 21, 1997, FDA advised the Patent and Trademark Office that this human drug product had undergone a regulatory review period and that the approval of MENTAX represented the first permitted commercial marketing or use of the product. Shortly thereafter, the Patent and Trademark Office requested that FDA determine the product's regulatory review period.

FDA has determined that the applicable regulatory review period for MENTAX is 1,201 days. Of this time, 638 days occurred during the testing phase of the regulatory review period, while 563 days occurred during the approval phase. These periods of time were derived from the following dates:

1. *The date an exemption under section 505(i) of the Federal Food, Drug, and Cosmetic Act (21 U.S.C. 355(i)) became effective*: July 7, 1993. FDA has verified the applicant's claim that the date that the investigational new drug application became effective was on July 7, 1993.

2. *The date the application was initially submitted with respect to the human drug product under section 505(b) of the Federal Food, Drug, and Cosmetic Act*: April 5, 1995. The applicant claims April 4, 1995, as the date the new drug application (NDA) for MENTAX (NDA 20–524) was initially submitted. However, FDA records indicate that NDA 20–524 was submitted on April 5, 1995.

3. *The date the application was approved*: October 18, 1996. FDA has verified the applicant's claim that NDA 20–524 was approved on October 18, 1996.

This determination of the regulatory review period establishes the maximum potential length of a patent extension. However, the U.S. Patent and Trademark Office applies several statutory limitations in its calculations of the actual period for patent extension. In its application for patent extension, this applicant seeks 866 days of patent term extension.

Anyone with knowledge that any of the dates as published is incorrect may, on or before June 20, 1997, submit to the Dockets Management Branch (address above) written comments and ask for a redetermination. Furthermore, any interested person may petition FDA, on or before October 20, 1997, for a determination regarding whether the applicant for extension acted with due diligence during the regulatory review period. To meet its burden, the petition must contain sufficient facts to merit an FDA investigation. (See H. Rept. 857, part 1, 98th Cong., 2d sess., pp. 41–42, 1984.) Petitions should be in the format specified in 21 CFR 10.30.

Comments and petitions should be submitted to the Dockets Management Branch (address above) in three copies (except that individuals may submit single copies) and identified with the docket number found in brackets in the heading of this document. Comments and petitions may be seen in the Dockets Management Branch between 9 a.m. and 4 p.m., Monday through Friday.

Dated: April 4, 1997.

**Allen B. Duncan,**

*Acting Associate Commissioner for Health Affairs.*

[FR Doc. 97–10133 Filed 4–18–97; 8:45 am]

BILLING CODE 4160–01–F

---

## DEPARTMENT OF HEALTH AND HUMAN SERVICES

### Food and Drug Administration

### Advisory Committee; Notice of Meeting

**AGENCY:** Food and Drug Administration, HHS.

**ACTION:** Notice.

**SUMMARY:** This notice announces a forthcoming meeting of a public advisory committee of the Food and Drug Administration (FDA). This notice also summarizes the procedures for the meeting and methods by which interested persons may participate in open public hearings before FDA's advisory committees.

FDA has established an Advisory Committee Information Hotline (the hotline) using a voice-mail telephone system. The hotline provides the public with access to the most current information on FDA advisory committee meetings. The advisory committee hotline, which will disseminate current information and information updates, can be accessed by dialing 1–800–741–8138 or 301–443–0572. Each advisory committee is assigned a 5-digit number. This 5-digit number will appear in each individual notice of meeting. The hotline will enable the public to obtain information about a particular advisory committee by using the committee's 5-digit number. Information in the hotline is preliminary and may change before a meeting is actually held. The hotline will be updated when such changes are made.

**MEETING:** The following advisory committee meeting is announced:

### Arthritis Advisory Committee

*Date, time, and place.* May 6 and 7, 1997, 8:30 a.m., Holiday Inn—Gaithersburg, Whetstone Room, Two Montgomery Village Ave., Gaithersburg, MD.

*Type of meeting and contact person.* Open public hearing, May 6, 1997, 8:30 a.m. to 9 a.m., unless public participation does not last that long; closed presentation of data, 9 a.m. to 11 a.m.; closed committee deliberations, 11 a.m. to 5 p.m.; open public hearing, May 7, 1997, 8:30 a.m. to 9 a.m., unless public participation does not last that long; closed presentation of data, 9 a.m. to 11 a.m.; closed committee deliberations, 11 a.m. to 1 p.m.; Kathleen R. Reedy or LaNise Giles, Center for Drug Evaluation and Research (HFD–21), Food and Drug Administration, 5600 Fishers Lane, Rockville, MD 20857, 301–443–5455, FAX: 301–443–0699, or FDA Advisory Committee Information Hotline, 1–800–741–8138 (301–443–0572 in the Washington, DC area), Arthritis Advisory Committee, code 12532. Please call the hotline for information concerning any possible changes.

*General function of committee.* The committee reviews and evaluates data on the safety and effectiveness of marketed and investigational human drugs for use in arthritic conditions.

*Agenda—Open public hearing.* Interested persons may present data, information, or views, orally or in writing, on issues pending before the committee. Those desiring to make formal presentations should notify the contact person before May 1, 1997, and submit a brief statement of the general nature of the evidence or arguments they wish to present, the names and addresses of proposed participants, and an indication of the approximate time required to make their comments.

*Closed presentation of data.* On May 6 and 7, 1997, the committee will hear trade secret and/or confidential commercial information relevant to pending investigational new drug applications (IND's) and new drug applications (NDA's). This portion of the meeting will be closed to permit discussion of this information (5 U.S.C. 552b(c)(4)).

*Closed committee deliberations.* On May 6 and 7, 1997, the committee will review trade secret or confidential commercial information relevant to

pending IND's and NDA's. This portion of the meeting will be closed to permit discussion of this information (5 U.S.C. 552b(c)(4)).

Each public advisory committee meeting listed above may have as many as four separable portions: (1) An open public hearing, (2) an open committee discussion, (3) a closed presentation of data, and (4) a closed committee deliberation. Every advisory committee meeting shall have an open public hearing portion. Whether or not it also includes any of the other three portions will depend upon the specific meeting involved. The dates and times reserved for the separate portions of each committee meeting are listed above.

The open public hearing portion of the meeting(s) shall be at least 1 hour long unless public participation does not last that long. It is emphasized, however, that the 1 hour time limit for an open public hearing represents a minimum rather than a maximum time for public participation, and an open public hearing may last for whatever longer period the committee chairperson determines will facilitate the committee's work.

Public hearings are subject to FDA's guideline (subpart C of 21 CFR part 10) concerning the policy and procedures for electronic media coverage of FDA's public administrative proceedings, including hearings before public advisory committees under 21 CFR part 14. Under 21 CFR 10.205, representatives of the electronic media may be permitted, subject to certain limitations, to videotape, film, or otherwise record FDA's public administrative proceedings, including presentations by participants.

Meetings of advisory committees shall be conducted, insofar as is practical, in accordance with the agenda published in this **Federal Register** notice. Changes in the agenda will be announced at the beginning of the open portion of a meeting.

Any interested person who wishes to be assured of the right to make an oral presentation at the open public hearing portion of a meeting shall inform the contact person listed above, either orally or in writing, prior to the meeting. Any person attending the hearing who does not in advance of the meeting request an opportunity to speak will be allowed to make an oral presentation at the hearing's conclusion, if time permits, at the chairperson's discretion.

The agenda, the questions to be addressed by the committee, and a current list of committee members will be available at the meeting location on the day of the meeting.

Transcripts of the open portion of the meeting may be requested in writing from the Freedom of Information Office (HFI–35), Food and Drug Administration, 5600 Fishers Lane, rm. 12A–16, Rockville, MD 20857, approximately 15 working days after the meeting, at a cost of 10 cents per page. The transcript may be viewed at the Dockets Management Branch (HFA–305), Food and Drug Administration, 12420 Parklawn Dr., rm. 1–23, Rockville, MD 20857, approximately 15 working days after the meeting, between the hours of 9 a.m. and 4 p.m., Monday through Friday. Summary minutes of the open portion of the meeting may be requested in writing from the Freedom of Information Office (address above) beginning approximately 90 days after the meeting.

The Commissioner has determined for the reasons stated that those portions of the advisory committee meetings so designated in this notice shall be closed. The Federal Advisory Committee Act (FACA) (5 U.S.C. app. 2, 10(d)), permits such closed advisory committee meetings in certain circumstances. Those portions of a meeting designated as closed, however, shall be closed for the shortest possible time, consistent with the intent of the cited statutes.

The FACA, as amended, provides that a portion of a meeting may be closed where the matter for discussion involves a trade secret; commercial or financial information that is privileged or confidential; information of a personal nature, disclosure of which would be a clearly unwarranted invasion of personal privacy; investigatory files compiled for law enforcement purposes; information the premature disclosure of which would be likely to significantly frustrate implementation of a proposed agency action; and information in certain other instances not generally relevant to FDA matters.

Examples of portions of FDA advisory committee meetings that ordinarily may be closed, where necessary and in accordance with FACA criteria, include the review, discussion, and evaluation of drafts of regulations or guidelines or similar preexisting internal agency documents, but only if their premature disclosure is likely to significantly frustrate implementation of proposed agency action; review of trade secrets and confidential commercial or financial information submitted to the agency; consideration of matters involving investigatory files compiled for law enforcement purposes; and review of matters, such as personnel records or individual patient records, where disclosure would constitute a clearly unwarranted invasion of personal privacy.

Examples of portions of FDA advisory committee meetings that ordinarily shall not be closed include the review, discussion, and evaluation of general preclinical and clinical test protocols and procedures for a class of drugs or devices; consideration of labeling requirements for a class of marketed drugs or devices; review of data and information on specific investigational or marketed drugs and devices that have previously been made public; presentation of any other data or information that is not exempt from public disclosure pursuant to the FACA, as amended; and, deliberation to formulate advice and recommendations to the agency on matters that do not independently justify closing.

FDA regrets that it was unable to publish this notice 15 days prior to the May 6 and 7, 1997, Arthritis Advisory Committee meeting. Because the agency believes there is some urgency to bring this issue to public discussion and qualified members of the Arthritis Advisory Committee were available at this time, the Commissioner concluded that it was in the public interest to hold this meeting even if there was not sufficient time for the customary 15-day public notice.

This notice is issued under section 10(a)(1) and (a)(2) of the Federal Advisory Committee Act (5 U.S.C. app. 2), and FDA's regulations (21 CFR part 14) on advisory committees.

Dated: April 15, 1997.

**Michael A. Friedman,**

*Deputy Commissioner for Operations.*

[FR Doc. 97–10251 Filed 4–18–97; 8:45 am]

BILLING CODE 4160–01–F

---

## DEPARTMENT OF HEALTH AND HUMAN SERVICES

### Health Care Financing Administration

**[BPD–894–NC]**

### Medicare and Medicaid Programs; Announcement of Additional Applications From Hospitals Requesting Waivers for Organ Procurement Service Area

**AGENCY:** Health Care Financing Administration (HCFA), HHS.

**ACTION:** Notice with comment period.

**SUMMARY:** This notice announces eight additional applications that HCFA has received from hospitals requesting waivers from dealing with their designated organ procurement organizations (OPOs) in accordance

with section 1138(a)(2) of the Act. It supplements notices published in the **Federal Register** on January 19, 1996, May 17, 1996, and November 8, 1996, that announced hospital waiver requests received by HCFA. This notice requests comments from OPOs and the general public for our consideration in determining whether these waivers should be granted.

**DATES:** Written comments will be considered if we receive them at the appropriate address, as provided below, no later than 5 p.m. on June 20, 1997.

**ADDRESSES:** Mail written comments (one original and three copies) to the following address: Health Care Financing Administration, department of Health and Human Services, Attention: BPD–894-NC, P.O. Box 7517, Baltimore, MD 21244–0517.

If you prefer, you may deliver your written comments (one original and three copies) to one of the following addresses:

Room 309–G, Hubert H. Humphrey Building, 200 Independence Avenue, SW, Washington, DC 20201,
or
Room C5–09–26, 7500 Security Boulevard, Baltimore, MD 21244–1850.

Because of staffing and resource limitations, we cannot accept comments by facsimile (FAX) transmission. In commenting, please refer to file code BPD–894–NC. Comments received timely will be available for public inspection as they are received, generally beginning approximately 3 weeks after publication of a document, in Room 309–G of the Department's offices at 200 Independence Avenue, SW, Washington, DC, on Monday through Friday of each week from 8:30 a.m. to 5 p.m. (phone: (202) 690–7890).

**FOR FURTHER INFORMATION CONTACT:** Mark A. Horney (410) 786–4554.

**SUPPLEMENTARY INFORMATION:**

## I. Background

On January 19, 1996, May 17, 1996, and November 8, 1996, we published notices in the **Federal Register** (61 FR 1389, 61 FR 24941, and 61 FR 57876) that announced applications which HCFA had received from hospitals requesting a waiver from dealing with their designated organ procurement organizations (OPOs) in accordance with section 1138(a)(2) of the Social Security Act (the Act).

This notice supplements these three notices. Section 1138(a)(1)(A)(iii) of the Social Security Act (the Act) provides that a hospital or rural primary care hospital that participates in the Medicare or Medicaid programs must establish written protocols for the identification of potential organ donors.

Section 155 of the Social Security Act Amendments of 1994 (SSA '94) (Pub. L. 103–432) amended section 1138 of the Act to require that effective January 1, 1996, a hospital must notify the organ procurement organization (OPO) designated for the service area in which it is located of potential organ donors (sections 1138 (a)(1)(A)(iii) and (a)(3)(B) of the Act). The hospital must also have an agreement to do so only with that designated OPO (sections 1138 (a)(1)(C) and (a)(3)(A)).

The statute also provides that the hospital may obtain a waiver of these requirements from the Secretary. A waiver would allow the hospital to have an agreement with an ''out-of-area'' OPO (section 1138(a)(2)) if it meets conditions specified in the statute (section 1138(a)(2)(A) (i) and (ii)).

The law further states that in granting a waiver, the Secretary must determine that such a waiver: (1) Would be expected to increase donation; and (2) will assure equitable treatment of patients referred for transplants within the service area served by the designated OPO and within the service area served by the out-of-area OPO (section 1138(a)(2)(A)). In making a waiver determination, the Secretary may consider, among other factors: (1) Cost effectiveness; (2) improvements in quality; (3) whether there has been any change in a hospital's designated OPO service area due to the definition of metropolitan statistical areas (MSAs); and (4) the length and continuity of a hospital's relationship with the out-of-area OPO (section 1138(a)(2)(B)). Under section 1138(a)(2)(D) of the Act, the Secretary is required to publish a notice of any waiver applications within 30 days of receiving the application and offer interested parties an opportunity to comment in writing within 60 days of the published notice.

Regulations at 42 CFR 486.318(d) provide that if HCFA changes the OPO designated for an area, hospitals located in that area must enter into agreements with the newly designated OPO or submit a request for a waiver within 30 days of notice of the change in designation. The criteria that the Secretary will use to evaluate the waiver in these cases are the same as that described above under section 1138(a)(2)(A) of the Act and incorporated in the regulations at § 486.318(e). The regulations further specify that a hospital may continue to operate under its existing agreement with an out-of-area OPO while HCFA is processing the waiver request.

HCFA recently redesignated all OPO service areas as a result of the 2-year recertification process required under the statute and regulations at § 486.304(e)(2).

## II. Waiver Request Procedures

In October 1995, we issued a Program Memorandum (Transmittal No. A–95–11) that has been supplied to each hospital. This Program Memorandum detailed the waiver process and discussed the information that hospitals must provide in requesting a waiver. We indicated that upon receipt of the waiver requests, we would publish a **Federal Register** notice to solicit public comments, as required by law (section 1138(a)(2)(D)).

We will then review the requests and comments received. During the review process, we may consult on an as-needed basis with agencies outside the HCFA Central Office, including the Public Health Service's Division of Transplantation, the United Network for Organ Sharing, and HCFA regional offices. If necessary, we may request additional clarifying information from the applying hospital or others. We then will make a final determination on the waiver requests and notify the affected hospitals and OPOs.

## III. Additional Hospital Waiver Requests

As allowed under § 483.316(d), the following seven hospitals have requested waivers to have an agreement with an alternative, out-of-area OPO, as a result of changes in their designated OPOs due to the recent redesignation of OPO service areas. The listing includes the name of the facility, the city and State location of the facility, the requested OPO, and the currently designated area OPO. These hospitals have submitted timely waiver requests and may work on an interim basis with the requested out-of-area OPO, pending receipt of public comments and our final determination.

| Name of facility | City | State | Requested OPO | Designated OPO |
|---|---|---|---|---|
| Wing Memorial Hospital | Palmer | MA | MAOB | CTHH |

| Name of facility | City | State | Requested OPO | Designated OPO |
|---|---|---|---|---|
| Noble Memorial Hospital | Westfield | MA | MAOB | CTHH |
| Holyoke Hospital | Holyoke | MA | MAOB | CTHH |
| Crestline Memorial Hosptial | Crestline | OH | OHLC | OHLP |
| River Valley Health System | Ironton | OH | KYDA | OHLP |
| Samaritan Health System | Lake Havasu | AZ | AZOB | NVLV |
| Kingman Regional Medical Center | Kingman | AZ | AZOB | NVLV |

In addition, the following hospital has requested a waiver that is unrelated to changes made as a result of recent redesignations of OPO service areas. This hospital's request was made on a prospective basis. Therefore, our determination on this request will be made only upon receipt of public comments and completion of our review. Any approval of this request will be prospective.

| Name of facility | City | State | Requested OPO | Designated OPO |
|---|---|---|---|---|
| Hutcheson Medical Center | Fort Oglethorpe | GA | GALL | TNDS |

## IV. Keys to the OPO Codes

The keys to the acronyms used in the listings to identify OPOs and their addresses are as follows:

AZOB
DONOR NETWORK OF ARIZONA, 3877 North Seventh Street, Phoenix, AZ 85014

CTHH NORTHEAST OPO AND TISSUE BANK, Hartford Hospital, 80 Seymour Street, Hartford, CT 06102–5037

GALL LIFELINK OF GEORGIA, 3715 Northside Parkway, 100 Northcreek, Suite 300, Atlanta, GA 30327

KYDA
KENTUCKY ORGAN DONOR AFFILIATES, 105 East Broadway, Louisville, KY 40202

MAOB
NEW ENGLAND ORGAN BANK, One Gateway Center, Newton, MA 02158

NVLV
NEVADA DONOR NEWTWORK, 4580 Southeastern Avenue, Suite 33, Las Vegas, NV 89119

OHLC
LIFE CONNECTION OF OHIO, 1545 Holland Road, Suite C, Maumee, OH 43537

OHLP
LIFELINE OF OHIO, 770 Kinnear Road, Suite 200, Columbus, OH 43212

TNDS
TENNESSEE DONOR SERVICES, 1714 Hayes Street, Nashville, TN 37203

## V. Collection of Information Requirements

Under the Paperwork Reduction Act of 1995, we are required to provide 60-day notice in the **Federal Register** and solicit public comment before a collection of information requirement is submitted to the Office of Management and Budget (OMB) for review and approval. In order to fairly evaluate whether an information collection should be approved by OMB, section 3506(c)(2)(A) of the Paperwork Reduction Act of 1995 requires that we solicit comment on the following issues:

- The need for the information collection and its usefulness in carrying out the proper functions of our agency.
- The accuracy of our estimate of the information collection burden.
- The quality, utility, and clarity of the information to be collected.
- Recommendations to minimize the information to be collected.

The information collection requirement and the burden associated with requiring a Medicare or Medicaid participating hospital to have an agreement with the OPO designated for its area or to submit a waiver request to HCFA for approval to have an agreement with a designed OPO other than the OPO designated for its service area currently are approved under OMB approval number 0938–0688 (HCFA-R-13), with an expiration date of November 30, 1997.

**Authority:** Section 1138 of the Social Security Act (42 U.S.C. 1320b–8).

(Catalog of Federal Domestic Assistance Program No. 93.773, Medicare—Hospital Insurance; and Program No. 93.774, and No. 93.778, Medical Assistance Program)

Dated: March 21, 1997.

**Barbara Wynn,**

*Acting Director, Bureau of Policy Development, Health Care Financing Administration.*

[FR Doc. 97–10144 Filed 4–18–97; 8:45 am]

BILLING CODE 4120–01–P

## DEPARTMENT OF HEALTH AND HUMAN SERVICES

### Health Care Financing Administration

**[BPO–141–N]**

### Medicare and Medicaid Programs; Quarterly Listing of Program Issuances—Third Quarter 1996

**AGENCY:** Health Care Financing Administration (HCFA), HHS.

**ACTION:** Notice.

**SUMMARY:** This notice lists HCFA manual instructions, substantive and interpretive regulations, and other **Federal Register** notices that were published during July, August, and September of 1996 that relate to the Medicare and Medicaid programs. It also identifies certain devices with investigational device exemption numbers approved by the Food and Drug Administration that may be potentially covered under Medicare.

Section 1871(c) of the Social Security Act requires that we publish a list of Medicare issuances in the **Federal Register** at least every 3 months. Although we are not mandated to do so by statute, for the sake of completeness of the listing, we are including all Medicaid issuances and Medicare and Medicaid substantive and interpretive regulations (proposed and final) published during this time frame.

**FOR FURTHER INFORMATION CONTACT:**

Bridget Wilhite, (410) 786–5248 (For Medicare instruction information).
Pat Prete, (410) 786–3246 (For Medicaid instruction information).
Sharon Hippler, (410) 786–4633 (For Food and Drug Administration-approved investigational device exemption information).
Cathy Johnson, (410) 786–5241 (For all other information).

**SUPPLEMENTARY INFORMATION:**

## I. Program Issuances

The Health Care Financing Administration (HCFA) is responsible for administering the Medicare and Medicaid programs, which pay for health care and related services for 38 million Medicare beneficiaries and 36 million Medicaid recipients. Administration of these programs involves (1) Providing information to Medicare beneficiaries and Medicaid recipients, health care providers, and the public, and (2) effective communications with regional offices, State governments, State Medicaid Agencies, State Survey Agencies, various providers of health care, fiscal intermediaries and carriers that process claims and pay bills, and others. To implement the various statutes on which the programs are based, we issue regulations under the authority granted the Secretary under sections 1102, 1871, and 1902 and related provisions of the Social Security Act (the Act) and also issue various manuals, memoranda, and statements necessary to administer the programs efficiently.

Section 1871(c)(1) of the Act requires that we publish in the **Federal Register** at least every 3 months a list of all Medicare manual instructions, interpretive rules, and guidelines of general applicability not issued as regulations. We published our first notice June 9, 1988 (53 FR 21730).

Since the publication of our quarterly listing on June 12, 1992 (57 FR 24797), we decided to add Medicaid issuances to our quarterly listings. Accordingly, we list in this notice Medicaid issuances and Medicaid substantive and interpretive regulations published during July through September 1996.

Although we are not mandated to do so by statute, for the sake of completeness of the listing of operational and policy statements, we are continuing our practice of including Medicare substantive and interpretive regulations (proposed and final) published during the 3-month time frame and are initiating the inclusion of HCFA Rulings.

## II. How To Use the Addenda

This notice is organized so that a reader may review the subjects of all manual issuances, memoranda, substantive and interpretive regulations, or Food and Drug Administration-approved investigational device exemptions published during the time frame to determine whether any are of particular interest. We expect it to be used in concert with previously published notices. Most notably, those unfamiliar with a description of our Medicare manuals may wish to review Table I of our first three notices (53 FR 21730, 53 FR 36891, and 53 FR 50577) and the notice published March 31, 1993 (58 FR 16837), and those desiring information on the Medicare Coverage Issues Manual may wish to review the August 21, 1989 publication (54 FR 34555).

To aid the reader, we have organized and divided this current listing into six addenda. Addendum I lists the publication dates of the most recent quarterly listing of program issuances.

Addendum II identifies previous **Federal Register** documents that contain a description of all previously published HCFA Medicare and Medicaid manuals and memoranda.

Addendum III of this notice lists, for each of our manuals or Program Memoranda, a HCFA transmittal number unique to that instruction and its subject matter. A transmittal may consist of a single instruction or many. Often it is necessary to use information in a transmittal in conjunction with information currently in the manuals.

Addendum IV lists all substantive and interpretive Medicare and Medicaid regulations and general notices published in the **Federal Register** during the quarter covered by this notice. For each item, we list the date published, the **Federal Register** citation, the parts of the Code of Federal Regulations (CFR) that have changed (if applicable), the agency file code number, the title of the regulation, the ending date of the comment period (if applicable), and the effective date (if applicable).

Addendum V lists a HCFA Ruling that was issued during the period covered by this notice. A HCFA ruling which is a statement of policy or interpretation that has not been published in the **Federal Register** as part of a regulation or of a notice implementing regulations, but which has been adopted by HCFA as having precedent.

On September 19, 1995, we published a final rule (60 FR 48417) establishing in regulations that certain devices with an investigational device exemption approved by the Food and Drug Administration and certain services related to those devices may be covered under Medicare. That final rule states that we will announce in this quarterly notice all investigational device exemption categorizations, using the investigational device exemption numbers the Food and Drug Administration assigns. Addendum VI includes listings of the Food and Drug Administration-approved investigational device exemption numbers that have been approved during the quarter covered by this notice. The listings are organized according to the categories to which the device numbers are assigned (that is, Category A or Category B, and identified by the investigational device exemption number). Future notices will announce investigational device exemption categorizations and the numbers assigned by the Food and Drug Administration for the quarter covered by the notice.

## III. How To Obtain Listed Material

### *A. Manuals*

An individual or organization interested in routinely receiving any manual and revisions to it may purchase a subscription to that manual. Those wishing to subscribe should contact either the Government Printing Office (GPO) or the National Technical Information Service (NTIS) at the following addresses:

Superintendent of Documents, Government Printing Office, A TTN: New Orders, P.O. Box 371954, Pittsburgh, PA 15250–7954, Telephone (202) 512–1800, Fax number (202) 512–2250 (for credit card orders); or

National Technical Information Service, Department of Commerce, 5825 Port Royal Road, Springfield, VA 22161, Telephone (703) 487–4630.

In addition, individual manual transmittals and Program Memoranda listed in this notice can be purchased from NTIS. Interested parties should identify the transmittal(s) they want. GPO or NTIS can give complete details on how to obtain the publications they sell. Additionally, all manuals are available at the following Internet address: http//www.hcfa.gov/pubforms/progman.htm.

### *B. Regulations and Notices*

Regulations and notices are published in the daily **Federal Register**. Interested individuals may purchase individual copies or subscribe to the **Federal Register** by contacting the GPO at the address given above. When ordering individual copies, it is necessary to cite either the date of publication or the volume number and page number.

The **Federal Register** is also available on 24× microfiche and as an online database through GPO Access. The online database is updated by 6 a.m. each day the **Federal Register** is published. The database includes both text and graphics from Volume 59, Number 1 (January 2, 1994) forward. Free public access is available on a Wide Area Information Server (WAIS)

through the Internet and via asynchronous dial-in. Internet users can access the database by using the World Wide Web; the Superintendent of Documents home page address is http://www.access.gpo.gov/su__docs/, by using local WAIS client software, or by telnet to swais.access.gpo.gov, then log in as guest (no password required). Dial-in users should use communications software and modem to call (202) 512–1661; type swais, then log in as guest (no password required).

*C. Rulings*

We publish Rulings on an infrequent basis. Interested individuals can obtain copies from the nearest HCFA Regional Office or review them at the nearest regional depository library. We also sometimes publish Rulings in the **Federal Register**.

*D. HCFA's Compact Disk-Read Only Memory (CD–ROM)*

Our laws, regulations, and manuals are also available on CD–ROM, which may be purchased from GPO or NTIS on a subscription or single copy basis. The Superintendent of Documents list ID is HCLRM, and the stock number is 717–139–00000–3. The following material is on the CD–ROM disk:

- Titles XI, XVIII, and XIX of the Act.
- HCFA-related regulations.
- HCFA manuals and monthly revisions.
- HCFA program memoranda.

The titles of the Compilation of the Social Security Laws are current as of January 1, 1995. The remaining portions of CD–ROM are updated on a monthly basis.

Because of complaints about the unreadability of the Appendices (Interpretive Guidelines) in the State Operations Manual (SOM), as of March 1995, we deleted these appendices from CD–ROM. We intend to re-visit this issue in the near future, and, with the aid of newer technology, we may again be able to include the appendices on CD–ROM.

Any cost report forms incorporated in the manuals are included on the CD–ROM disk as LOTUS files. LOTUS software is needed to view the reports once the files have been copied to a personal computer disk.

## IV. How To Review Listed Material

Transmittals or Program Memoranda can be reviewed at a local Federal Depository Library (FDL). Under the FDL program, government publications are sent to approximately 1,400 designated libraries throughout the United States. Interested parties may examine the documents at any one of the FDLs. Some may have arrangements to transfer material to a local library not designated as an FDL. To locate the nearest FDL, contact any library.

In addition, individuals may contact regional depository libraries, which receive and retain at least one copy of most Federal government publications, either in printed or microfilm form, for use by the general public. These libraries provide reference services and interlibrary loans; however, they are not sales outlets. Individuals may obtain information about the location of the nearest regional depository library from any library. Superintendent of Documents numbers for each HCFA publication are shown in Addendum III, along with the HCFA publication and transmittal numbers. To help FDLs locate the instruction, use the Superintendent of Documents number, plus the HCFA transmittal number. For example, to find the Intermediary Manual, Part 1—Fiscal Administration (HCFA Pub. 13–1) transmittal entitled ''Electronic Remittance Advice,'' use the Superintendent of Documents No. HE 22.8/6–3 and the HCFA transmittal number 127.

## V. General Information

It is possible that an interested party may have a specific information need and not be able to determine from the listed information whether the issuance or regulation would fulfill that need. Consequently, we are providing information contact persons to answer general questions concerning these items. Copies are not available through the contact persons. Copies can be purchased or reviewed as noted above.

Questions concerning Medicare items in Addendum III may be addressed to Bridget Wilhite, Bureau of Program Operations, Issuances Staff, Health Care Financing Administration, N2–05–03, 7500 Security Boulevard, Baltimore, 21244–1850, Telephone (410) 786–5248.

Questions concerning Medicaid items in Addendum III may be addressed to Pat Prete, Medicaid Bureau, Office of Medicaid Policy, Health Care Financing Administration, C4–25–02, 7500 Security Boulevard, Baltimore, MD 21244–1850, Telephone (410) 786–3246.

Questions concerning Food and Drug Administration-approved investigational device exemptions may be addressed to Sharon Hippler, Bureau of Policy Development, Office of Chronic Care and Insurance Policy, Health Care Financing Administration, C4–11–04, 7500 Security Boulevard, Baltimore, MD 21244–1850, Telephone (410) 786–4633.

Questions concerning all other information may be addressed to Cathy Johnson, Bureau of Policy Development, Office of Regulations, Health Care Financing Administration, C5–12–16, 7500 Security Boulevard, Baltimore, MD 21244–1850, Telephone (410) 786–5241.

(Catalog of Federal Domestic Assistance Program No. 93.773, Medicare—Hospital Insurance, Program No. 93.774, Medicare—Supplementary Medical Insurance Program, and Program No. 93.714, Medical Assistance Program)

Dated: April 10, 1997.

**Gary Kavanagh,**

*Acting Director, Bureau of Program Operations.*

## Addendum I

This addendum lists the publication dates of the most recent quarterly listings of program issuances.

July 26, 1995 (60 FR 38344)

November 15, 1995 (60 FR 57435)

April 8, 1996 (61 FR 15491)

June 26, 1996 (61 FR 33119)

December 18, 1996 (61 FR 66676)

## Addendum II.—Description of Manuals, Memoranda, and HCFA Rulings

An extensive descriptive listing of Medicare manuals and memoranda was published on June 9, 1988, at 53 FR 21730 and supplemented on September 22, 1988, at 53 FR 36891 and December 16, 1988, at 53 FR 50577. Also, a complete description of the Medicare Coverage Issues Manual was published on August 21, 1989, at 54 FR 34555. A brief description of the various Medicaid manuals and memoranda that we maintain was published on October 16, 1992, at 57 FR 47468.

## ADDENDUM III—MEDICARE AND MEDICAID MANUAL INSTRUCTIONS

[July through September 1996]

| Trans. No. | Manual/Subject/Publication Number |
|---|---|
| | **Intermediary Manual**<br>**Part 1—Fiscal Administration (HCFA Pub. 13–1)**<br>**(Superintendent of Documents No. HE 22.8/6–3)** |
| 127 | • Electronic Remittance Advice |
| | **Intermediary Manual**<br>**Part 3—Claims Process**<br>**(HCFA Pub. 13–3)**<br>**(Superintendent of Documents No. HE 22.8/6)** |
| 1684 | • Reporting Outpatient Surgery and Other Services |
| 1685 | • Review of Form HCFA–1450 for Inpatient and Outpatient Bills<br>Pneumococcal Pneumonia, Influenza Virus and Hepatitis B Vaccines |
| 1686 | • Billing for Clinical Diagnostic Laboratory Services Other Than to Inpatients<br>Laboratory Tests Utilizing Automated Equipment<br>Organ or Disease Oriented Panels<br>Modification of EOMB Process |
| 1687 | • Outpatient Observation Services<br>Bill Review for Partial Hospitalization Services Provided in Community Mental Health Centers<br>Hospital Outpatient Partial Hospitalization Services<br>Billing for Hospitalization Outpatient Services Furnished by Clinical Social Workers |
| 1688 | • Reporting Outpatient Services Using HCFA Common Procedures Coding System<br>HCPCS Codes for Diagnostic Services and Medical Services<br>Ambulance Services |
| | **Carriers Manual**<br>**Part 1—Fiscal Administration (HCFA Pub. 14–1)**<br>**(Superintendent of Documents No. HE 22.8/7–2)** |
| 121 | • Electronic Remittance Advice |
| | **Carriers Manual**<br>**Part 3—Claims Process (HCFA Pub. 14–3)**<br>**(Superintendent of Documents No. HE 22.8/7)** |
| 1548 | • ANSI ASC X12 270 Health Care Eligibility/Benefit Inquiry and the ANSI ASC X12 271 Health Care Eligibility/Benefit Information Transaction Sets |
| 1549 | • Beneficiary Address Change |
| 1550 | • Reasonableness and Necessity |
| 1551 | • Billing for Pneumococcal, Hepatitis B, and Influenza Virus Vaccines<br>General Claims Processing Requirements<br>HCPCS Coding<br>Billing Requirements<br>Payment Requirements<br>No Legal Obligation to Pay<br>Simplified Roster Bills<br>Specialty Code/Place of Service Processing Requirements<br>Payment Requirements<br>Health Maintenance Organization Processing Requirements<br>Suppression of EOMBs |
| | **Carriers Manual**<br>**Part 4—Professional Relations (HCFA Pub. 14–4)**<br>**(Superintendent of Documents No. HE 22.8/7–4)** |
| 13 | • Provider of Service or Supplier Information<br>• Patient and Insured Information |
| | **Program Memorandum**<br>**Intermediaries (HCFA Pub. 60A)**<br>**(Superintendent of Documents No. HE 22.8/6–5)** |
| A–96–2 | • Medicare's Partial Hospitalization Benefit-Eligibility and Scope of Services |
| A–96–3 | • Proposed Changes to Form HCFA–2552–96 |
| A–96–4 | • Cost Report Processing for Form HCFA–2552–92 |
| A–96–5 | • Fiscal Intermediary Coordination of Benefits File Format and ANSI X12 837 Transaction |
| A–96–6 | • Skilled Nursing Facility's Request for Exemptions to the Cost Limits |
| A–96–7 | • Policy Clarification: Provider-Based Designation |

ADDENDUM III—MEDICARE AND MEDICAID MANUAL INSTRUCTIONS—Continued

[July through September 1996]

| Trans. No. | Manual/Subject/Publication Number |
|---|---|
| | **Program Memorandum<br>Carriers (HCFA Pub. 60B)<br>(Superintendent of Documents No. HE 22.8/6–5)** |
| B–96–2 | • Carrier Coordination of Benefits File Format and ANSI X12 837 Transaction |
| | **Program Memorandum<br>Intermediaries/Carriers (HCFA Pub. 60A/B)<br>(Superintendent of Documents No. HE 22.8/6–5)** |
| AB–96–7 | • Expanded Denial Codes for Medicare Secondary Payer |
| AB–96–8 | • Clarification for the New Modifier QP for Laboratory Services |
| AB–96–9 | • Clarification Regarding Medicare Coverage and Claims Processing Responsibility for Refill Kits, Implantable Infusion Pumps, and the Drugs Used With These Pumps |
| | **Program Memorandum<br>State Survey Agencies<br>(HCFA Pub. 65)<br>(Superintendent of Documents No. HE 22.8/6–5)** |
| 96–1 | • Informal Dispute Resolution |
| | **Regional Office Manual<br>Standards and Certification<br>(HCFA Pub. 23–4)<br>(Superintendent of Documents No. HE 22.8/8–3)** |
| 62 | • Definitions<br>Findings of Compliance<br>Findings of Noncompliance<br>Redesignation of OPOs<br>OPOs Operating in a Noncontiguous U.S. State<br>Interim Designations<br>Opening a Service Area for Competition<br>Changes in Ownership or Service Area<br>Termination of Organ Procurement Organizations<br>Model Letter: Organ Procurement Organization Corrective Action Notice<br>Model Letter: Organ Procurement Organization, Notice of Termination<br>Model Letter: Organ Procurement Organization Notice to Public and State Medicaid/Medicare Agencies<br>Model Letter: Organ Procurement Organization's Notice to Bordering OPOs<br>Organ Procurement Organization Report<br>Review Procedures and Guidelines for Organ Procurement Organizations<br>OPO Application Process<br>United Network of Organ Sharing Members<br>Forms HCFA–576, HCFA 576A, Organ Procurement Organization Application and Agreement<br>Organ Procurement Organizations Citations<br>OPO Initial Designation Requirements<br>Public Health Service Grantees<br>OPO Network Membership<br>Designation of OPO for a Service Area<br>OPO Designation Procedures in Service Areas with Competing Applications<br>Model Letter: Organ Procurement Organization Approval<br>Model Letter: Organ Procurement Organization Denial—Failure to Meet Requirements<br>Model Letter: Organ Procurement Organization Denial—Competing Applications |
| | **Peer Review Organization Manual<br>(HCFA Pub. 19)<br>(Superintendent of Documents No. HE 22.8/8–15)** |
| 62 | • Introduction<br>Qualifications<br>Responsibilities<br>Communications Personnel |
| | **Hospital Manual<br>(HCFA Pub. 10)<br>Superintendent of Documents No. HE 22.8/2)** |
| 696 | • Reporting Outpatient Surgery and Other Services<br>HCPCS for Hospital Outpatient Radiology and Other Diagnostic Procedures |
| 697 | • Pneumococcal Pneumonia, Influenza Virus and Hepatitis B Vaccines |

ADDENDUM III—MEDICARE AND MEDICAID MANUAL INSTRUCTIONS—Continued

[July through September 1996]

| Trans. No. | Manual/Subject/Publication Number |
|---|---|
| 698 | • Billing for Clinical Diagnostic Laboratory Services Other Than to Inpatients<br>Laboratory Tests Utilizing Automated Equipment<br>Organ or Disease Oriented Panels<br>Modification of EOMB Process |
| 699 | • Outpatient Observation Services<br>Billing for Hospital Outpatient Partial Hospitalization Services<br>Billing for Hospital Outpatient Services Furnished by Clinical Social Workers |
| 700 | • Ambulance Service Claims<br>HCPCS Reporting Requirement<br>Reporting Outpatient Services Using HCFA Common Procedure Coding System |
| | **Christian Science Sanatorium<br>Hospital Manual Supplement<br>(HCFA Pub. 32)<br>(Superintendent of Documents No. HE 22.8/2–2)** |
| 37 | • Pneumococcal Pneumonia, Influenza Virus and Hepatitis B Vaccines |
| | **Home Health Agency Manual<br>(HCFA Pub. 11)<br>(Superintendent of Documents No. HE 22.8/5)** |
| 280 | • Pneumococcal Pneumonia, Influenza Virus and Hepatitis B Vaccines |
| | **Skilled Nursing Facility Manual<br>(HCFA Pub. 12)<br>(Superintendent of Documents No. HE 22.8/3)** |
| 345 | • Special Billing Instructions for Pneumococcal Pneumonia, Influenza Virus and Hepatitis B Vaccines |
| | **Renal Dialysis Facility Manual<br>(Non-Hospital Operated)<br>(HCFA Pub. 29)<br>(Superintendent of Documents No. HE 22.8/13)** |
| 75 | • Pneumococcal Pneumonia and Influenza Virus Vaccines |
| 76 | • Pneumococcal Pneumonia and Influenza Virus Vaccines |
| | **Hospice Manual<br>(HCFA Pub. 21)<br>(Superintendent of Documents No. HE 22.8/18)** |
| 50 | • Special Billing Instructions for Pneumococcal Pneumonia, Influenza Virus, and Hepatitis B Vaccines |
| | **Outpatient Physical Therapy and Comprehensive<br>Outpatient Rehabilitation Facility Manual (HCFA Pub. 9)<br>(Superintendent of Documents No. HE 22.8/9)** |
| 126 | • Billing Instructions for Partial Hospitalization Services Provided in Community Mental Health Centers |
| 127 | • Pneumococcal Pneumonia, Influenza Virus and Hepatitis B Vaccine |
| | **Coverage Issues Manual<br>(HCFA Pub. 6)<br>Superintendent of Documents No. HE 22.8/14)** |
| 88 | • Human Tumor Stem Cell Drug Sensitivity Assays |
| 89 | • Incontinence Control Devices<br>Bladder Stimulators |
| | **Provider Reimbursement Manual<br>Part 1—(HCFA Pub.15–1)<br>(Superintendent of Documents No. HE 22.8/4)** |
| 395 | • Definition<br>Formal Plan<br>Commercial Insurance as a Funding Mechanism<br>Deferred Compensation<br>Defined Contribution Deferred Compensation Plans<br>Pension Plans<br>Costs Not Related to Patient Care, Unallowable Costs Not Related to Patient Care<br>Physician Billing Costs<br>Vested Benefits |

ADDENDUM III—MEDICARE AND MEDICAID MANUAL INSTRUCTIONS—Continued

[July through September 1996]

| Trans. No. | Manual/Subject/Publication Number |
|---|---|
| 396 | • Methodology for Determining Per Diem Prospective Payment Rates Effective for Cost Reporting Periods Beginning On or After October 1, 1992, and Before October 1, 1993 |
| | **Provider Reimbursement Manual**<br>**Part II—Provider Cost Reporting Forms and Instructions (HCFA Pub. 15–II–AB)**<br>**(Superintendent of Documents No. HE 22.8/4)** |
| 10 | • Cost Reporting Instructions<br>Electronic Reporting Specifications |
| | **Provider Reimbursement Manual**<br>**Part II—Provider Cost Reporting Forms and Instructions (HCFA Pub. 15–II–AH)**<br>**(Superintendent of Documents No. HE 22.8/4)** |
| 4 | • Reclassification and Adjustment of Trial Balance of Expenses<br>Adjustment of Expenses |
| | **Provider Reimbursement Manual**<br>**Part II—Provider Cost Reporting Forms and Instructions (HCFA Pub. 15–II–AI)**<br>**(Superintendent of Documents No. HE 22.8/4)** |
| 1 | • Skilled Nursing Facility and Skilled Nursing Facility Complex Cost Report Form HCFA 2540–96 |
| | **State Medicaid Manual—Part 2**<br>**State Organization and General Administration**<br>**(HCFA Pub. 45–2)**<br>**(Superintendent of Documents No. HE 22.8/10)** |
| 87 | • Annual Report on Home and Community-Based Services Waivers Form HCFA–372 and Form HCFA–372(S) |
| 88 | • Statistical Report on Medical Care: Eligibles, Recipients, Payments, and Services<br>Federal Reporting Requirements<br>Statistical Report on Medical Care: Eligibles, Recipients, Payments, and Services (Form HCFA–2082)<br>Requirements for State Participation in the Medicaid Statistical Information System |
| | **State Medicaid Manual—Part 5**<br>**Early and Periodic Screening, Diagnosis, and Treatment**<br>**(HCFA Pub. 45–5)**<br>**(Superintendent of Documents No. HE 22.8/10)** |
| 11 | • Screening Service Content |
| | **State Medicaid Manual—Part 6**<br>**Payment for Services**<br>**(HCFA Pub. 45–6)**<br>**(Superintendent of Documents No. HE 22.8/10)** |
| 31 | • Physician Services to Children Under 21<br>Physician Services to Pregnant Women |
| | **Medicare/Medicaid**<br>**Sanction—Reinstatement Report**<br>**(HCFA Pub. 69)** |
| 96–7 | • Report of Physicians/Practitioners, Providers and/or Other Health Care Suppliers Excluded/Reinstated—June 1996 |
| 96–8 | • Report of Physicians/Practitioners, Providers and/or Other Health Care Suppliers Excluded/Reinstated—July 1996 |

*Medicare Coverage Issues Manual*

For the Medicare Coverage Issues Manual instructions that were published during the quarter covered by this notice, we give the transmittal number, the title of the section, and a brief synopsis of the revisions. The full text of these revisions is available at the following Internet address: http://www.hcfa.gov/pubforms/pub6/pub6toc.htm.

Transmittal No. 88

Clarification—Effective Date: Not Applicable.

*Section 50–41, Human Tumor Stem Cell Drug Sensitivity Assays,* clarifies that while the fluorescent cytoprint assay (FCA) is not based upon the same or a similar procedure as the human tumor stem cell drug sensitivity assay, it is sufficiently alike that it is included under this subject. The basic difference is that the FCA incorporates the use of microorgan systems and a fluorescent dye. The test is performed as an in vitro chemosensitivity test for the effectiveness of drugs for cancer treatment. Medicare considers the clinical application of this procedure as experimental and not covered by the program at this time.

Transmittal No. 89

Changed Implementing Instructions—Effective Date: For services furnished on or after 10/07/96.

*Section 65–9, Incontinence Control Devices,* is revised to reflect that in female patients the Abdominal Leak Point Pressure (ALPP) measurement is amended from less than 65 cm $H_20$ to an ALPP of less than 100 cm $HH_20$, if the diagnosis of intrinsic sphincter deficiency (ISD) is established. HCFA is amending the leak point pressure measurement in female patients without urethral hypermobility and with abdominal leak point pressures of 65 cm $H_20$ to 100 cm $H_20$.

For patients whose incontinence showed no improvement after the initial five treatments, no further treatments are covered. HCFA is amending the lifetime limitation of five treatment sessions for patients who have received successful treatments in the past to allow latitude for the treating physician to decide whether additional sessions of collagen injection may be beneficial. For these patients, medical documentation must accompany claims for additional treatments beyond five. HCFA is deleting the requirement that patients must have shown no improvement in their incontinence for at least 12 months prior to collagen therapy in order to be eligible for coverage.

In addition, the coverage guidelines for pelvic floor stimulators that were previously in § 65–11 under the bladder stimulators policy are being moved to § 65–9 since pelvic floor stimulators are more appropriately identified as incontinence control devices. Section 65–9 is also revised to indicate that pelvic floor stimulators are not covered for the reason that the effectiveness of these devices is unproven. The previous policy in § 65–11 indicated that both the safety and effectiveness of pelvic floor stimulators were unproven.

*Section 65–11, Bladder Stimulators,* is revised to eliminate the use of name brand products. HCFA now identifies devices according to a general categorization of products rather than by specific brand names. In addition, the coverage guidelines for pelvic floor stimulators have been moved to § 65–9.

ADDENDUM IV.—REGULATION DOCUMENTS PUBLISHED IN THE FEDERAL REGISTER

| Publication date | FR vol. 61 page | CFR part(s) | File code* | Regulation title | End of comment period | Effective date |
|---|---|---|---|---|---|---|
| 07/01/96 ..... | 33928–33936 | | BPD–847-CN | Medicare Program; Changes to the Hospital Inpatient Prospective Payment Systems and Fiscal Year 1997 Rates; Correction. | ..... | ..... |
| 07/01/96 ..... | 34344–34365 | | BPD–867-NC | Medicare Program; Schedule of Limits on Home Health Agency Costs Per Visit for Cost Reporting Periods Beginning on or After July 1, 1996. | 08/30/96 | 070196 |
| 07/02/96 ..... | 34614–34662 | 405, 410, 415 | BPD–852-P | Medicare Program; Revisions to Payment Policies Under the Physician Fee Schedule for Calendar Year 1997. | 09/03/96 | ..... |
| 07/05/96 ..... | 35307 | 405, 417, 431, 473, 498 | BPD–704-FC | Medicare and Medicaid Programs; Provider Appeals; Technical Amendments; Correction. | ..... | 07/24/96 |
| 07/16/96 ..... | 37011–37015 | 413 | BPD–647-F | Medicare Program; Reporting of Interest From Zero Coupon Bonds. | ..... | 08/15/96 |
| 07/23/96 ..... | 38207–38212 | | BPD–849-PN | Medicare Program; Recognition of the Ambulatory Surgical Center Standards of the Joint Commission on the Accreditation of Healthcare Organizations and the Accreditation Association for Ambulatory Health Care. | 08/22/96 | ..... |
| 07/24/96 ..... | 38395–38399 | | MB–099-F | Medicaid Program; Medicaid Eligibility Quality Control, Progressive Reductions in Federal Financial Participation for FYs 1982–1984, Payment for Physician Billing for Clinical Laboratory Services, and Utilization Control of Skilled Nursing Facility Services: Removal of Obsolete Requirements. | ..... | 08/23/96 |
| 07/24/96 ..... | 38395 | 417 | OMC–009-FC | Medicare Program; Qualified Health Maintenance Organizations; Correction. | ..... | 10/01/95 |
| 08/01/96 ..... | 40236–40242 | | BPO–139-N | Medicare and Medicaid Programs; Quarterly Listing of Program Issuances and Coverage Decisions-First Quarter 1996. | ..... | ..... |
| 08/02/96 ..... | 40343–40347 | 406, 407, 408, 416 | BPD–752-FC | Medicare Program; Special Enrollment Periods and Waiting Period. | 10/01/96 | 09/03/96 |
| 08/15/96 ..... | 42385–42386 | 417, 473, 498 | BPD–704-CN | Medicare and Medicaid Programs: Provider Appeals; Technical Amendments; Corrections. | ..... | 07/24/96 |
| 08/15/96 ..... | 42385 | 415 | BPD–827-CN | Medicare Program; Revisions to Payment Policies and Adjustments to the Relative Value Units Under the Physician Fee Schedule for Calendar Year 1996; Correction. | ..... | [1] 01/01/96 |

ADDENDUM IV.—REGULATION DOCUMENTS PUBLISHED IN THE FEDERAL REGISTER—Continued

| Publication date | FR vol. 61 page | CFR part(s) | File code* | Regulation title | End of comment period | Effective date |
|---|---|---|---|---|---|---|
| 08/16/96 | 42637–42638 | | ORD–090-N | New and Pending Demonstration Project Proposals Submitted Pursuant to Section 1115(a) of the Social Security Act: June 1996. | | |
| 08/30/96 | 46166–46328 | 412, 413, 489 | BPD–847-F | Medicare Program; Changes to the Hospital Inpatient Prospective Payment Systems and Fiscal Year 1997 Rates. | | 10/01/96 |
| 09/03/96 | 46466–46478 | | BPD–842-NC | Medicare Program; Schedule of Prospectively Determined Payment Rates for Skilled Nursing Facility Inpatient Routine Service Costs. | 11/04/96 | 10/01/96 |
| 09/03/96 | 46384–46385 | 417 | OMC–010-FC | Medicare and Medicaid Programs; Requirements for Physician Incentive Plans in Prepaid Health Care Organizations; Correction. | 11/04/96 | 09/03/96 |
| 09/04/96 | 46579–46603 | 418 | BPD–820-P | Medicare Program; Hospice Wage Index. | 11/04/96 | |
| 09/09/96 | 47423–47434 | 482 | BPD–633-F | Medicare and Medicaid Program; Hospital Standard for Potentially HIV Infectious Blood and Blood Products. | | 11/08/96 |
| 09/11/96 | 47946–47950 | ORD–091-N | New and Pending Demonstration Project Proposals Submitted Pursuant to Section 1115(a) of the Social Security Act | | | |
| 09/11/96 | 47950–47951 | | OPL–011-N | Medicare Program; September 30, 1996 Meeting of the Practicing Physicians Advisory Council. | | |
| 09/19/96 | 49269–49271 | 401, 405 | BPD–869-F | Medicare Program; Waiver of Recovery of Overpayments. | | 10/21/96 |
| 09/19/96 | 49271–49276 | 421 | BPO–105-F | Medicare Program; Part B Advance Payments to Suppliers Furnishing Items or Services Under Medicare Part B. | | 10/21/96 |
| 09/23/96 | 49781–49785 | | MB–100-N | Medicaid Program; Final Limitations on Aggregate Payments to Disproportionate Share Hospitals; Federal Fiscal Year 1996. | | |
| 09/26/96 | 50493 | | ORD–092-N | New and Pending Demonstration Project Proposals Submitted Pursuant to Section 1115(a) of the Social Security Act: August 1996. | | |
| 09/30/96 | 51021 | | BPD–704-CN | Medicare and Medicaid Programs; Provider Appeals: Technical Amendments; Correction. | | 07/24/96 |

[1] And 07/01/96 (part 415 only).

## Addendum V.—HCFA Ruling

HCFAR–96–1 Medicare Program; Medicare Supplementary Medical Insurance (Part B); Clarification of the Terms ''Orthotics,'' ''Braces,'' and ''Durable Medical Equipment'' under Medicare Part B. Issued September 18, 1996.

## Addendum VI.—Categorization of Food and Drug Administration-Approved Investigational Device Exemptions

Under the Food, Drug, and Cosmetic Act (21 U.S.C. 360c), devices fall into one of three classes:

*Class I*—Devices for which the general controls of the Food, Drug, and Cosmetic Act, such as adherence to good manufacturing practice regulations, are sufficient to provide a reasonable assurance of safety and effectiveness.

*Class II*—Devices that, in addition to general controls, require special controls, such as performance standards or postmarket surveillance, to provide a reasonable assurance of safety and effectiveness.

*Class III*—Devices that cannot be classified into Class I or Class II because insufficient information exists to determine that either special or general controls would provide reasonable assurance of safety and effectiveness. Class III devices require premarket approval.

Under the new categorization process to assist HCFA, the Food and Drug Administration assigns each device with a Food and Drug Administration-approved investigational device exemption to one of two categories:

Experimental/Investigational (Category A) Devices, or Non-Experimental/Investigational (Category B) Devices. Under this categorization process, an experimental/investigational

(Category A) device is an innovative device in Class III for which ''absolute risk'' of the device type has not been established (that is, initial questions of safety and effectiveness have not been resolved and the Food and Drug Administration is unsure whether the device type can be safe and effective). A non-experimental/investigational (Category B) device is a device believed to be in Class I or Class II, or a device believed to be in Class III for which the incremental risk is the primary risk in question (that is, underlying questions of safety and effectiveness of that device type have been resolved), or it is known that the device type can be safe and effective because, for example, other manufacturers have obtained Food and Drug Administration approval for that device type. The criteria the Food and Drug Administration uses to categorize an investigational device under Category B include the following:

(1) Devices, regardless of the classification, under investigation to establish substantial equivalence to a predicate device, that is, to establish substantial equivalence to a previously/currently legally marketed device.

(2) Class III devices whose technological characteristics and indication for use are comparable to a Pre-Market Approval (PMA)-approved device.

(3) Class III devices with technological advances compared to a PMA-approved device, that is, a device with technological changes that represent advances to a device that has already received PMA-approval (generational changes).

(4) Class III devices that are comparable to a PMA-approved device but are under investigation for a new indication for use. For purposes of studying the new indication, no significant modifications to the device were required.

(5) Pre-amendments Class III devices that become the subject of an investigational device exemption after the Food and Drug Administration requires premarket approval, that is, no PMA application was submitted or the PMA application was denied.

(6) Nonsignificant risk device investigations for which the Food and Drug Administration required the submission of an investigational device exemption.

The following information presents the device number, category (in this case, A), and criterion code.

G960032 A1
G960055 A
G960069 A2
G960125 A1
G960140 A2
G960143 A2
G960154 A2
G960169 A2

The following information presents the device number category (in this case, B), and criterion code.

G940026 B
G950128 B3
G960005 B1
G960022 B2
G960050 B2
G960059 B2
G960077 B3
G960080 B3
G960092 B4
G960114 B4
G960116 B4
G960117 B2
G960120 B1
G960121 B3
G960122 B2
G960123 B1
G960126 B2
G960127 B4
G960128 B1
G960129 B3
G960130 B
G960132 B4
G960133 B2
G960135 B1
G960136 B2
G960139 B4
G960141 B
G960142 B2
G960148 B
G960150 B2
G960151 B4
G960152 B4
G960153 B2
G960155 B1
G960156 B
G960157 B
G960158 B4
G960159 B
G960161 B
G960162 B
G960165 B
G960168 B1
G960170 B4
G960171 B3
G960172 B3
G960173 B
G960175 B2
G960176 B1
G960177 B3
G960179 B1
G960180 B4
G960182 B2
G960221 B4

**Note:** Some investigational devices may exhibit unique characteristics or raise safety concerns that make additional consideration necessary. For these devices, HCFA and the Food and Drug Administration will agree on the additional criteria to be used. The Food and Drug Administration will use these criteria to assign the device(s) to a category. As experience is gained in the categorization process, this addendum may be modified.

[FR Doc. 97–10138 Filed 4–18–97; 8:45 am]

BILLING CODE 4120–01–P

## DEPARTMENT OF HEALTH AND HUMAN SERVICES

### Indian Health Service

### Indian Child Protection and Child Abuse Prevention

**AGENCY:** Indian Health Service, HHS.

**ACTION:** Notice of availability of funds for Competitive Grants for Indian Child Protection and Child Abuse Prevention Demonstration Projects for Mental Health/Social Services for American Indians/Alaska Natives.

**SUMMARY:** The Indian Health Services (IHS) announces that approximately $900,000 is available for support of competitive grants for approximately five to six projects to Tribal, Urban and non-profit Indian organizations for Demonstration Projects for Indian Child Protection and Child Abuse Prevention for Mental Health/Social Services for American Indians/Alaska Natives. This program is established under the authority of Section 301(a), of the Public Health Service Act, as amended. There will be only one funding cycle during fiscal year (FY) 1997 (see Fund Availability and Period of Support). This program is described at 93.933 in the Catalog of Federal Domestic Assistance. Executive Order 12372 requiring intergovernmental review is not applicable to this program. The Public Health Service (PHS) urges applicants submitting applications to address specific objectives of *Health People 2000*. Such interested applicants may obtain a copy of *Health People 2000* (Full Report; Stock No. 017–001–00474–0) or *Health People 2000* (Summary Report; Stock No. 017–001–00473–1) through the Superintendent of Documents, Government Printing Office, Washington, DC 20402–9325 (telephone 202–512–1800).

**SMOKE-FREE WORKPLACE:** The PHS strongly encourages all grant recipients to provide a smokefree workplace and promote the non-use of all tobacco products. This is consistent with the PHS mission to protect and advance the physical and mental health of the American people.

**DUE DATE:** An original and two (2) copies of the completed grant application must be submitted, with all required documentation, to the Grants Management Branch, Division of Acquisition and Grants Management, Twinbrook Metro Plaza-Suite 100, 12300 Twinbrook Parkway, Rockville, MD 20852, by close of business MAY 30, 1997.

Applications shall be considered as meeting the deadline if they are either:

(1) Received on or before the deadline with hand carried applications received by close of business 5 p.m.; or (2) postmarked on or before the deadline date and received in time to be reviewed along with all other timely applications. A legibly dated receipt from a commercial carrier or the U.S. Postal Service will be accepted as proof of timely mailing. Private metered postmarks will not be accepted as proof of timely mailing. Applications received after the announced closing date will be returned to the applicant and will not be considered for funding.

**ADDITIONAL DATES:**

A. Application Review Date: June 26–27, 1997
B. Applicants Notified of Results (approved, approved unfunded, or disapproved): July 15, 1997
C. Anticipated Start Date: August 1, 1997.

**CONTACTS FOR ASSISTANCE:** For program information, contact Maria E. Stetter-Burns, Training/Administrative Officer, Indian Health Service, Mental Health/Social Services Branch, 5300 Homestead, NE, Albuquerque, New Mexico 87110, (505) 248–4245.

For grant application and business management information, contact M. Kay Carpentier, Grants Management Officer, Grants Management Branch, Division of Acquisition and Grants Management, Indian Health Service, Twinbrook Metro Plaza-Suite 100, 12300 Twinbrook Parkway, Rockville, MD 20852, (301) 443–5204. (The telephone numbers are not toll-free numbers.)

**SUPPLEMENTARY INFORMATION:** This announcement provides information on the general program goal, eligibility and documentation requirements, programmatic activities, funding availability and period of support, and application procedures.

## General Program Goal

The goal of this project is to establish programs for child protective services, child abuse and family violence treatment. The programs must include a community based and culturally appropriate prevention component which meets *Health People 2000* objectives as they affect American Indians and Alaska Natives.

## Eligibility and Documentation Requirements

Any federally recognized Indian tribe, Indian tribal organization or non-profit organizations—501 (c)(3) serving primarily American Indians and Alaska Natives is eligible to apply for a demonstration grant from the IHS under this announcement.

*Documentation of Support*

1. Tribal Resolutions

(a) A resolution of the Indian tribe or Indian Tribal organization supporting this specific project must accompany the application submission.

(b) Applications which propose services which will benefit more than one Indian tribe must include resolutions from all affected tribes to be served.

(c) Applications by tribal organizations will not require resolution(s) if the current tribal resolution(s) under which they operate would encompass the proposed grant activities. A statement of proof or a copy of the current operational resolution must accompany the application.

(d) If a resolution or a statement is not submitted, the application will be considered incomplete and will be returned without consideration.

2. Non-Profit Organizations—Copy of the 501(c)(3) non-profit certificate.

3. Letters of Cooperation/Collaboration/Assistance.

(a) Letters included in the application should be specific to this program.

(b) If other related human services programs are to be involved in the project, letters confirming the nature and extent of their cooperation/collaboration/assistance must be submitted.

## Programmatic Activities

A grant awarded under this announcement shall support a program to establish innovative demonstration programs for child protective services, child abuse and family violence treatment programs. Treatment programs should include a prevention component, be community based and culturally appropriate to meet *Healthy People 2000* objectives as they affect American Indians and Alaska Natives. Efforts may include, but are not limited to: (1) Establishing child protective service programs; (2) establishing outpatient child abuse and family violence treatment programs; and (3) supporting other innovative and culturally relevant treatment activities, programs, and projects.

## Fund Availability and Period of Support

In FY 1997, it is anticipated that approximately $900,000 will be available to support five or six grants. Projects will average $150,000 each inclusive of direct and indirect costs. Projects may be funded annually for up to five years depending upon the defined scope of work. Continuation projects will be based upon the availability of appropriations in future years, the continuing need of IHS for the projects, and satisfactory project performance. The anticipated start date will be August 1, 1997.

## The Indian Child Protection and Child Abuse Prevention Grant Application Kit

An IHS Grant Application Kit, including form PHS 5161–1 (rev. 7/92), may be obtained from the Grants Management Branch, Division of Acquisition and Grants Management, Twinbrook Metro Plaza—Suite 100, 12300 Twinbrook Parkway, Rockville, MD 20852, telephone (301) 443–5204.

## Factors for Consideration in Preparing the Application

1. Following the outline provided in the announcement will guide the writing of the application and facilitate the reviewers in locating required information.

2. Projects should demonstrate coordination with other agencies and organizations within and without the community who serve the targeted population.

3. Indian cultural aspects should be considered in program design.

## Grant Application Requirements

All applications must be single-spaced, typewritten, and consecutively numbered pages using black type not smaller than 12 characters per one inch, with conventional one inch border margins, on only one side of standard size 8½ × 11 paper that can be photocopied. The application Narrative (not including the Appendix) must not exceed 10 typed pages. An additional page may be used for each additional year of funding requested. Exclusions from the 10 page limit are the Abstract, Tribal Resolution(s), 501(c)(3) Non-Profit Certification, Documentation or Letters of Support, Standard Forms, Table of Contents, and the Appendix. All applications must include the following in the order presented:

- Tribal Resolution(s), Non-Profit 501(c)(3) Certification and Documentation or Letters of Support.
- Standard Form 424, Application for Federal Assistance.
- Standard Form 424A, Budget Information—Non-Construction Programs (pages 1 and 2).
- Standard Form 424B, Assurances—Non-Construction Programs (front and back).
- Checklist (pages 23–24) NOTE: Each standard form and the checklist is

contained in the PHS Grant Application, Form PHS 5161–1 (OMB #0937–0189; expires 07/31/98).

- A Project Abstract (may not exceed 1 typewritten page) should present a summary view of ''who-what-when-where-how-cost'' to determine acceptability for review.
- A table of contents to correspond with numbered pages.
- Project Narrative (10 pages).

1. Introduction and Need for Assistance.
2. Project Objective(s), Approach, and Results & Benefits.
3. Project Evaluation.
4. Organizational Capabilities and Qualifications.
5. Budget.

- Appendix to include:
- Resumes of key staff.
- Position Descriptions for key staff.
- Organizational Chart.
- Documentation of current certified financial management systems.
- Copy of current negotiated indirect cost rate agreement.
- A map of the area to benefit from the project, and
- Application Receipt Card, PHS–3038–1 Rev. 5–90.

*A. Narrative*

The narrative section of the application must include the following: (1) Justification for need for assistance; (2) work plan (including use of appropriate Native healing practices), program objectives, approach, expected results and evaluation process, (3) adequacy of management controls, and (4) key personnel. The work plan section should be project specific.

These instructions for the preparation of the narrative are to be used in lieu of the instructions on page 19–20 of the PHS 5161–1. The narrative section should be written in a manner that is clear to outside reviewers unfamiliar with prior related activities of the applicant. It should be well organized, succinct, and contain all information necessary for reviewers to understand the project fully. The narrative may not exceed TEN single spaced pages in length, excluding attachments, budget, and tribal resolutions/501(c)(3) non-profit certificate/documentation or letters of support (pages must be numbered).

1. Need for Assistance

(a) Describe and define the target population at the project location (e.g. tribal population, number of cases of child abuse reported, number of child abuse cases prosecuted, number of children/families currently in treatment, number of children/families at-risk). Information sources must be appropriately identified.

(b) Describe the existing resources and services available, including the maintenance of Native healing systems, where appropriate, which are related to the specific program/service the applicant is proposing to provide.

(c) Describe in detail the needs of the target population and what efforts have been made in the past to meet these needs, if any (e.g. number of treatment providers, collaborative efforts with state/county treatment programs, availability of program funding from federal/non-federal sources).

(d) Summarize the applicable federal/national standards, State or tribal laws and regulations, and describe the unmet needs of any applicant's current program in relation to applicable federal/national standards, State or tribal laws and regulations (e.g. Tribal children's codes, state/tribal/federal child abuse reporting, protection of individuals who report suspected child abuse).

2. Work Plan

(a) Program Objectives

1. State concisely the objectives of the project.
2. Describe briefly what the project intends to accomplish.
3. Describe how accomplishment of the objectives will be measured (including if replicable).

(b) Approach

1. Describe the tasks and resources needed to implement and complete this project.
2. Provide a task time line (milestones) breakdown or chart. Indicate the date that the project will begin to accept clients.

(c) Describe the Expected Results

1. Discuss data collection for the project, how it will be obtained, analyzed, and maintained by the project. Data should include, but is not limited to, the number and types of clients served, services provided, client outcomes and satisfaction, and costs associated with the program.
2. Describe how the data collection will support the stated program objectives, and how it will support the program evaluation to determine the impact of the project.

(d) Program Evaluation

1. Describe methods for evaluating program activities, effectiveness of interventions, success in achieving objectives, the impact of interventions, acceptance among the targeted population, and workload accomplishments.
2. Identify who will conduct the evaluation of the projected outcomes and when the evaluation is to be completed.
3. Identify the cost of the evaluation (whether internal or external).

(e) Program Continuance

Discuss how the program services will be continued after the grant expires.

(f) Experience Sharing

Indicate the project's willingness to share its program experience with IHS Areas, urban programs, tribes and other tribal organizations.

3. Adequacy of Management Controls

(a) Describe where the project will be housed, i.e. facilities and equipment available.

(b) Describe the management controls of the grantee over the directions and acceptability of work to be performed. Discuss personnel and financial systems in use and changes planned for this grant.

(c) Applicant must demonstrate that the organization has adequate systems and expertise to manage Federal funds. Also, include a letter from the accounting firm describing results of the most recent organization-wide audit.

4. Key Personnel

(a) Provide a biographical sketch (qualifications) and position descriptions for the program director and other key personnel as described on page 20–21 of the PHS 5161–1. Identify existing personnel and new program staff to be hired.

(b) Provide an organizational chart and indicate how the project will operate within the organization. Describe how this program will interface with other existing available resources.

(c) List the qualifications and experience of consultants or contractors where their use is anticipated. Identify who will determine if the work of a contractor is acceptable.

*B. Budget*

1. An itemized estimate of costs and justification for the proposed program by line item must be provided on form SF 424A Budget Information Non-Construction Programs.
2. A narrative justification must be submitted for all costs. Indicate needs by listing individual items and quantities necessary. The need for items and quantities should be clearly specified in the narrative justification.
3. Any special start up costs should be indicated.

4. Multi-Year Projects—Projects requiring 2, 3, 4 or 5 years funding must include a brief program narrative and budget for each additional year of funding requested. The applicant may use one additional page to describe the developmental plans for each additional year of the project.

5. Grant funding may not be used to supplant existing public and private resources.

*C. Assurances*

The application shall contain assurance to the Secretary that the applicant will comply with program regulations, 42 CFR part 36, Subpart H.

**Review Process**

Applications meeting eligibility requirements, are complete, responsive, and conform to this program announcement will be reviewed for merit by reviewers appointed by the IHS. The review will be conducted in accordance with PHS review procedures. The review process ensures selection of quality projects in a national competition for limited funding. Applications will be evaluated and rated on the basis of the evaluation criteria listed below. These criteria are used to evaluate the quality of a proposed project, to assign a numerical score to each application, and to determine the likelihood of its success. Applications scoring below 60 points will not be funded.

**Evaluation Criteria**

Applications will be evaluated against the following criteria and weights:

| Weight (percent) | Criteria | Description |
|---|---|---|
| 25 ..... | 1 | Need—The demonstration of identified problems and risks in the target population. Extent of community involvement and commitment. |
| 40 ..... | 2 | Work Plan—The soundness and effectiveness of the applicant's plan for conducting the project, with special emphasis on the objectives and methodology portion of the application. |
| 15 ..... | 3 | Adequacy of Management Controls—The apparent capability of the applicant to successfully conduct the project including both technical and business aspects. The soundness of the applicant's budget in relation to the project work plan and for assuring effective utilization of grant funds. Adequacy of facilities and equipment available within the organization or proposed for purchase under the project. |
| 10 ..... | 4 | Key Personnel—Qualifications and adequacy of the staff. |
| 10 ..... | 5 | Budget—Clarity and accuracy of program costs, and cost justification for the entire grant period. |
| 100 ..... | ..... | Total Weight. |

**Reporting Requirements**

*A. Progress Report*

Program progress reports will be required semiannually. These reports will include a brief description of a comparison of actual accomplishments to the goals established for the period, reasons for slippage and other pertinent information as required. A final report is due 90 days after expiration of the project/budget period.

*B. Financial Status Report*

A semiannual financial status report will be submitted 30 days after the end of the half-year. Final financial status reports are due 90 days after the expiration of the project/budget period. Standard Form 269 (long form) will be sued for financial reporting.

**Grant Administration Requirements**

Grants are administered in accordance with the following documents:

A. 45 CFR part 92. Department of Health and Human Services, Uniform Administrative Requirements for Grants and Cooperative Agreements to State and Local Governments, or 45 CFR part 74, Administration of Grants to Non-profit recipients.

B. Public Health Service Grants Policy Statement, and

C. Appropriate Cost Principles: OMB Circular A–87, State and Local Governments, or OMB Circular A–122, Nonprofit Organizations.

**Results of the Review**

Sucessful applicants are notified through the official Notice of Grant Award (NGA) document. The NGA will state the amount of Federal funds awarded, the purpose of the grant, the terms and conditions of the grant award, the effective date of the award, the project period, and the budget period.

Dated: April 14, 1997.

**Michael H. Trujillo,**

*Assistant Surgeon General, Director.*

[FR Doc. 97–10136 Filed 4–18–97; 8:45 am]

BILLING CODE 4160–16–M

## DEPARTMENT OF HEALTH AND HUMAN SERVICES

### Office of Inspector General

### Program Exclusions: March 1997

**AGENCY:** Office of Inspector General, HHS.

**ACTION:** Notice of program exclusions.

During the month of March 1997, the HHS Office of Inspector General imposed exclusions in the cases set forth below. When an exclusion is imposed, no program payment is made to anyone for any items or services (other than an emergency item or service not provided in a hospital emergency room) furnished, ordered or prescribed by an excluded party under the Medicare, Medicaid, Maternal and Child Health Services Block Grant and Block Grants to States for Social Services programs. In addition, no program payment is made to any business or facility, e.g., a hospital, that submits bills for payment for items or services provided by an excluded party. Program beneficiaries remain free to decide for themselves whether they will continue to use the services of an excluded party even though no program payments will be made for items and services provided by that excluded party. The exclusions have national effect and also apply to all Executive Branch procurement and non-procurement programs and activities.

| Subject, city, state | Effective date |
|---|---|
| **Program-Related Convictions** | |
| Active Living Center, Inc., Chapel Hill, NC ..... | 04/15/97 |

| Subject, city, state | Effective date |
|---|---|
| Aiello, Frank R., Lompoc, CA | 04/06/97 |
| Argiz, Pilar, Miami, FL | 04/15/97 |
| Artola, Pedro Luis, Miami, FL | 04/15/97 |
| Barrow, Bernard, Sylvania, OH | 04/01/97 |
| Beattie, Gerard Joseph, Madison, OH | 04/09/97 |
| Delgado, Jesus, Miami, FL | 04/03/97 |
| Dunn, Nurley W., Nathalie, VA | 04/08/97 |
| Faiwiszewski, Adam, Brooklyn, NY | 04/16/97 |
| Ferrer, Jose Martin, Lewisburg, PA | 04/03/97 |
| Fox, Robyn Dakin, Livermore, ME | 04/09/97 |
| Fuqua, Shirley J., Portland, OR | 04/13/97 |
| Garcia, Digna, Miami, FL | 04/03/97 |
| Gonzalez, Grisel Olga, Miami, FL | 04/03/97 |
| Hall, Angelita W., Southfield, MI | 04/01/97 |
| Harris, Sharon M., Dublin, CA | 04/06/97 |
| Hunter, Arlene Elizabeth, Tampa, FL | 04/15/97 |
| Iglesias, Gladys, Hawthorne, CA | 04/02/97 |
| Jenkins, Randy D., Knoxville, TN | 04/15/97 |
| Jones, Sandra K., Phoenix, AZ | 04/06/97 |
| Kachoria, Chander H., Parma, OH | 04/01/97 |
| Kahler, Kathleen Ann, Clearwater, FL | 04/15/97 |
| Khan, Muhammad Asim, Jamaica, NY | 04/16/97 |
| Lakins, Paul Gary, Manchester, KY | 04/15/97 |
| Leblanc, Michael R., Grand Rapids, MI | 04/06/97 |
| Lemire, Rene, Concord, NH | 03/26/97 |
| Lewis, Lawanda Lanell, Los Angeles, CA | 04/02/97 |
| Lewis, Terrie Ann, Inglewood, CA | 04/02/97 |
| Martinez, Miguel, Miami, FL | 04/03/97 |
| Mena, Samuel, Miami, FL | 04/03/97 |
| Meridian Dental Group Inc., Indianapolis, IN | 04/20/97 |
| Miller, Geraldine, Hazel Crest, IL | 04/10/97 |
| Monaco, Catherine, Stoneham, MA | 03/26/97 |
| Monterrey, Santiago, Miami, FL | 04/03/97 |
| Mumford, D Curtis, Portland, OR | 04/06/97 |
| Ngov, Bak Se, Long Beach, CA | 04/02/97 |
| Perez, Raydem, Miami, FL | 04/03/97 |
| Pitts, Denny, Harvey, IL | 04/10/97 |
| Pudupakkam, Ramachandra K., Lima, OH | 07/22/96 |
| Qamar, Bashir Alam, Fresh Meadows, NY | 04/16/97 |
| Redfering, David L., Indian Rocks Beach, FL | 04/15/97 |
| Robinson, Lloyd A., Decatur, GA | 04/15/97 |
| Rodriguez, Alfonso, Eglin AFB, FL | 04/03/97 |
| Rouhselang, Lloyd James, South Bend, IN | 04/10/97 |
| Rucker, Jacqueline, Indianapolis, IN | 04/10/97 |
| Samitier, Ricardo, Miami, FL | 04/06/97 |
| Sargeant, Thomas Lee, Kingston, WA | 04/06/97 |
| Schneider, Eli, Cincinnati, OH | 04/16/97 |
| Shah, Bhalchandra, Bloomingdale, IL | 04/01/97 |
| Shelgren, Donna, Sacramento, CA | 04/06/97 |
| Vega, Mario, Lexington, KY | 04/03/97 |
| Ward, Roger Dale, Coleman, FL | 04/15/97 |
| Ward Drugs, Inc., Coleman, FL | 04/15/97 |
| Woodmansee, Arthur W., San Jose, CA | 04/16/97 |
| Yang, Vivid Chung, St Petersburg, FL | 04/03/97 |
| Yi, Sinhong, Long Beach, CA | 04/02/97 |
| **Patient Abuse/Neglect Convictions** | |
| Arre, Jill, Stonybrook, NY | 04/16/97 |
| Closen, Michael P. Peoria, IL | 04/10/97 |
| Gaston, Henry L., Wilmington, DE | 04/08/97 |
| Goff, Robert, Ripplemead, VA | 04/10/97 |
| Gonzalez, Michael N., Athens, NY | 04/16/97 |
| Greene, Martha M., Rockingham, NC | 04/15/97 |
| Leiter, Gregory Warren, Big Rapids, MI | 04/10/97 |
| Livingston, Rema, Staten Island, NY | 04/16/97 |
| Lyons, Derrick, Chicago, IL | 04/10/97 |
| Miller, Thomas Jr., Chesapeake City, MD | 04/08/97 |
| Moore, Eddie B., Roundaway, MS | 04/14/97 |
| Nardone, Donna, North Chili, NY | 04/16/97 |
| Rogers, Roy Verlin, Springfield, MO | 04/10/97 |
| Saint Joy, Rozina Shanaz, Uniondale, NY | 04/16/97 |
| Settles, Diane Lorraine, Reisterstown, MD | 04/08/97 |

| Subject, city, state | Effective date |
|---|---|
| Smith, Lorie, Mount Vernon, OH | 04/16/97 |
| Tausinga, Kassanita, Salt Lake City, UT | 04/14/97 |
| Treadway, Andrew Scott, Cleveland, OH | 04/10/97 |
| White, Susan Elaine, Lewes, DE | 04/08/97 |
| Williams, Michelle R., Wilmington, DE | 04/08/97 |
| Williams, Israel Charles, Hamilton, IL | 04/10/97 |
| **Conviction for Health Care Fraud** | |
| Bradley, Andrea R., Orange City, FL | 04/15/97 |
| Cutajar, Donna, Staten Island, NY | 04/16/97 |
| Fermin, Jose, Irvin, CA | 04/02/97 |
| Gavidia, Elvis Ruben, Aurora, CO | 04/14/97 |
| Hering, Norton, Newport Beach, CA | 04/02/97 |
| Kalamazoo Footcare Specialists, Kalamazoo, MI | 04/10/97 |
| Murroni, Rosemary, Quincy, FL | 04/14/97 |
| Tarighi-Sadrieh, Nahid, Yorba Linda, CA | 04/02/97 |
| **Controlled Substance Convictions** | |
| Sellers, James E Jr., Hartford City, IN | 04/10/97 |
| Sowers, Joseph Mark Britton, Fulton, KY | 04/15/97 |
| **License Revocation/Suspension/Surrender** | |
| Anson, Agatha T., Manchester, NH | 04/09/97 |
| Arroyo, Ruy Dan, Severn, MD | 04/08/97 |
| Asal, Janice M., Danielson, CT | 04/09/97 |
| Asmar, Jabib, Ludlow, MA | 04/09/97 |
| Barnes, Antoinette, Wallingford, CT | 04/09/97 |
| Bocconcelli, Lynda P. Brighton, MA | 03/26/97 |
| Chackel-Sciotto, Julia T., Marlborough, NH | 04/09/97 |
| Chapman, Debra, Fontanelle, IA | 04/10/97 |
| Corrigan, Elizabeth A., Portsmouth, RI | 04/09/97 |
| D'Alessio, Loretta J., Waterbury, CT | 04/09/97 |
| Dozier, Sharon K., Hampton, NH | 04/09/97 |
| Duffy, Mary E., Dorchester, MA | 03/26/97 |
| Duick, Jennifer Ann, Nashua, NH | 04/09/97 |
| Ferreira, Janet R., Dennis, MA | 04/09/97 |
| Garrett, Leslie C., Portsmouth, NH | 04/09/97 |
| Goldwyn, Jay Stanley, Elmhurst, NY | 04/16/97 |
| Groten, Mary, Albuquerque, NM | 04/09/97 |
| Harris, Ruth, Stamford, CT | 04/09/97 |
| Hiers, Lois, Newington, CT | 04/09/97 |
| Houle, Amy L., Milford, NH | 04/09/97 |
| Hyatt, April K., Cheshire, CT | 04/09/97 |
| Jacobson, Gary L., Minneapolis, MN | 04/10/97 |
| Jones, Kenneth W., Carbondale, IL | 04/01/97 |
| Kanmore, Karen, Pueblo, CO | 04/14/97 |
| Kennedy, Arleen, Foxboro, MA | 03/26/97 |
| Kirman, Zipora, Highland Ranch, CO | 04/14/97 |
| LaRue, Joan, N. Attleboro, MA | 03/26/97 |
| LaSalle, Linda, Milford, NH | 04/09/97 |
| Luisi, Virginia B., Hyde Park, MA | 03/26/97 |
| Lyles, John W., Annandale, VA | 04/08/97 |
| Mazyck, Andrea M., Colorado Springs, CO | 04/14/97 |
| Mead, Robert J., Greensboro, NC | 04/15/97 |
| Messenger, Kimberly A., Manchester, NH | 04/09/97 |
| Milchman, Lisa, Tunbridge, VT | 03/26/97 |
| Milne, Gregory J., Hibbing, MN | 04/01/97 |
| Nilsson, Pamela J., Chelsea, MA | 03/26/97 |
| Norton, Beverly A., Marshfield, MA | 04/09/97 |
| Roberg, Anna E., Soldier, IA | 04/10/97 |
| Segrera, Rafael A., Odebolt, IA | 04/10/97 |
| Shaw, Darian, Center Harbor, NH | 04/09/97 |
| Silverstein, Leslie, Cromwell, CT | 04/09/97 |
| Simonson, Kathryn, Franconia, NH | 04/09/97 |
| Starvish, Susan, Feeding Hills, MA | 03/26/97 |
| Tangusso, Marilyn K., Braintree, MA | 03/26/97 |
| Tremlett, Kristin E., Apex, NC | 04/09/97 |
| Waid, Ruth Coleman, Lynchburg, VA | 04/08/97 |
| Wilson, Nina Marie, Nashua, NH | 04/09/97 |

| Subject, city, state | Effective date |
|---|---|
| **Federal/State Exclusion/Suspension** | |
| Apple Medical Supplies, Elmsford, NY | 04/16/97 |
| Blackman, Velda, Queens, NY | 04/16/97 |
| Colica, Fred, Elmsford, NY | 04/16/97 |
| Duroseau, Nancy, Queens, NY | 04/16/97 |
| Orthotic & Prosthetic Images, Hempstead, NY | 04/16/97 |
| Scotti, Louis, Hempstead, NY | 04/16/97 |
| Scotti, Donna, Hempstead, NY | 04/16/97 |
| **Owned/Controlled by Convicted/Excluded** | |
| Acupuncture Center of FLA, Inc., St. Petersburg, FL | 04/03/97 |
| Crystal Transportation, Decatur, GA | 04/15/97 |
| David Redfering and Associates, Indian Rocks Beach, FL | 04/15/97 |
| Express Medical DME, Inc., Lewisburg, PA | 04/03/97 |
| Florida Diagnostic Ctr., St. Petersburg, FL | 04/03/97 |
| MED EO Diagnostic Inc., Miami, FL | 04/15/97 |
| Vivid Medical Health Clinic, St. Petersburg, FL | 04/03/97 |
| Yang Laboratories, Inc., St. Petersburg, FL | 04/03/97 |
| . | |
| **Default on Heal Loan** | |
| Barksdale, Gregory A., Philadelphia, PA | 02/13/97 |
| Bolanos, Jose R., Los Gatos, CA | 04/13/97 |
| Boyce, Jesse M., Bowie, MD | 04/08/97 |
| Brenneis, Gerard, Sharon, PA | 04/08/97 |
| Brundell, Edmund David, Plant City, FL | 04/15/97 |
| Calhoun, Michael Warren, Palm Springs, CA | 04/13/97 |
| Carter-Ponzoo, Catherine Carol, Las Vegas, NV | 04/02/97 |
| Cheney, Julian L., Reseda, CA | 04/06/97 |
| Ching, Clayton V., Anaheim, CA | 04/02/97 |
| Chinn, Gregory W., Seattle, WA | 04/13/97 |
| Cline, Sherri Lee Sylmar, CA | 04/01/97 |
| Cobrin, Bettina B., Venice, CA | 04/02/97 |
| Cohen, Mitchell A., Haslett, MI | 04/01/97 |
| Coleman, James E., Jr Westminster, CA | 04/13/97 |
| Dakis, Stephen N., Birmingham, MI | 04/01/97 |
| Davidson, James A., Sparks, NV | 04/06/97 |
| Degroot, Ruth I., Modesto, CA | 04/13/97 |
| Dellavolpe, Michael A., Wolcott, CT | 03/26/97 |
| Dreyer, Frank J., Spokane, WA | 04/13/97 |
| Duff, Richard A., San Rafael, CA | 04/13/97 |
| Duncan, Monique, Los Angeles, CA | 04/06/97 |
| Durham, Ricky L., Houston, TX | 04/14/97 |
| Dyer, William David, Hollywood, FL | 04/15/97 |
| Elbayar, Nader K., Pt Washington, NY | 04/16/97 |
| Engelmann, Guy R., San Francisco, CA | 04/02/97 |
| Fabricant, Michael J., Davie, FL | 04/15/97 |
| Failla, Robert J., Staten Island, NY | 04/16/97 |
| Fernandez, Yolanda Crespo Capo, San Juan, PR | 04/16/97 |
| Gress, Raymond C., Sparta, MI | 04/10/97 |
| Halle, Thomas C., Los Angeles, CA | 04/06/97 |
| Harding, James W., III Austin, TX | 04/14/97 |
| Hetherington, Jane, Mountainside, NJ | 04/16/97 |
| Hill, Michael J., Pasadena, TX | 04/14/97 |
| Hintzelman, Kurt W., Canfield, OH | 04/10/97 |
| Hoangxaun, Tuan A., Seaside, CA | 04/06/97 |
| Horwitz, Robert B., Anchorage, AK | 04/14/97 |
| Howard, Marty B., Pleasanton, CA | 04/06/97 |
| Hungerford, Richard D., San Leandro, CA | 04/13/97 |
| Inskeep, Norman D., San Jose, CA | 04/01/97 |
| Jackson, Thomas C., Detroit, MI | 04/01/97 |
| Jette, Steven A., Petaluma, CA | 04/06/97 |
| Johnson, Lucinda, Bluebell, PA | 04/08/97 |
| Jones, Brady Joseph Jr., Dallas, TX | 04/14/97 |
| Jordan, James R., Olympia Fields, IL | 04/10/97 |
| Kelly, Andrew W., Los Angeles, CA | 04/13/97 |
| Kennedy, Michael D., Conroe, TX | 04/14/97 |
| Kerr, Bryant A., Corpus Christi, TX | 04/14/97 |
| Kim, Tae Joon, Idaho—Springs, CO | 04/14/97 |
| Kiss, Kathleen M., Shirley, NY | 04/16/97 |

| Subject, city, state | Effective date |
|---|---|
| Lamothe, Lissa, Philadelphia, PA | 04/08/97 |
| Lawrence, Herbert U., Huntington, NY | 04/16/97 |
| Leeds, Robert W., Jr., Redwood City, CA | 04/13/97 |
| Legg, William C., Clarkston, WA | 04/06/97 |
| Lesinski, Mary Catherine, Cleveland, OH | 04/10/97 |
| Lessin, Barry D., Chicago, IL | 04/01/97 |
| Lewis, George M., Indianapolis, IN | 04/01/97 |
| Lindsey, Glenda L., Baltimore, MD | 04/08/97 |
| Little, Carlton E., Detroit, MI | 04/01/97 |
| Lowry, Paulette M., Richmond, CA | 04/02/97 |
| Lucas, Jo-Ann, Detroit, MI | 04/01/97 |
| Lynch, Ray A., Columbia, MD | 04/08/97 |
| Marschall, Syke K., Seattle, WA | 04/06/97 |
| Marshall, William E., Burbank, CA | 04/13/97 |
| McCaul, Brad J., Red Bluff, CA | 04/13/97 |
| McCutcheon, Philip E., Pascagoula, MS | 04/14/97 |
| McKnight, Timothy J., Akron, OH | 04/10/97 |
| McMahon, Kathleen E., El Monte, CA | 04/13/97 |
| Meade, Madeline M., Parma, OH | 04/10/97 |
| Medori, John, Garden City, NY | 04/16/97 |
| Minton, Wayne E., Cleveland, OH | 04/10/97 |
| Miranda, Leandro Jr., San Antonio, TX | 04/14/97 |
| Mitchell, Ralph A., Alta Loma, CA | 04/06/97 |
| Moore, Wesley B., San Jose, CA | 04/13/97 |
| Moore, Angela A., Holly Springs, MS | 04/14/97 |
| Moore, Dennis J., Costa Mesa, CA | 04/02/97 |
| Morrison, John T., Port Orchard, WA | 04/06/97 |
| Mouzon, Laquetta, Philadelphia, PA | 04/08/97 |
| Munson, Herbert Mark, Houston, TX | 04/14/97 |
| Murakami, Robert M., Milwaukee, OR | 04/13/97 |
| Nagode, Dale A., Parma Heights, OH | 04/10/97 |
| Nguyen, Dung H., Anaheim, CA | 04/13/97 |
| O'Dell, Mark K., Independence, MO | 04/01/97 |
| Patterson, Roosevelt, Emporia, VA | 04/08/97 |
| Patterson, Larry D., Oak Ridge, TN | 04/15/97 |
| Perez, Jesus V., Pomona, CA | 04/06/97 |
| Rahn, Roger S., Woodland Hills, CA | 04/13/97 |
| Rayas-Felix, Magdalena, Los Angeles, CA | 04/06/97 |
| Real, Vernon D., Houston, TX | 04/14/97 |
| Reese, Elaine M., Dixmoor, IL, | 04/10/97 |
| Reid, E. Janet, Tucson, AZ | 04/02/97 |
| Richardson, Reginald B., Charlotte, NC | 04/15/97 |
| Rockmael, Allan M., San Francisco, CA | 04/02/97 |
| Rodriquez, Consuelo A., El Monte, CA | 04/06/97 |
| Romeieh, Barbara C., S Padre Island, TX | 04/14/97 |
| Romeo, Allen J., Statesville, NC | 04/15/97 |
| Sanders, Thomas, Kansas City, MO | 04/01/97 |
| Stasko, Edward G. Huntington Beach, CA | 04/06/97 |
| Taylor, John S., Sierra Vista, AZ | 04/13/97 |
| Townsend, Leo W., Elk Grove, CA | 04/13/97 |
| Varnas, Paul G., Chicago, IL | 04/01/97 |
| Wagner, John P., Newton, KS | 03/07/97 |
| Weston, Danly P., Fort Washington, MD | 04/08/97 |
| Zantout, Randa, Lebanon | 04/16/97 |
| **Peer Review Organization Cases** | |
| Klein, Alfred, L., Jena, LA | 01/12/97 |

Dated: April 9, 1997.

**William M. Libercci,**

*Director, Health Care Administrative Sanctions, Office of Enforcement and Compliance.*

[FR Doc. 97–10225 Filed 4–18–97; 8:45 am]

**BILLING CODE 4150–04–P**

## DEPARTMENT OF HEALTH AND HUMAN SERVICES

### National Institutes of Health

### National Cancer Institute; Notice of Closed Meeting

Pursuant to Section 10(d) of the Federal Advisory Committee Act, as amended (5 U.S.C. Appendix 2), notice is hereby given of the following National Cancer Institute Special Emphasis Panel (SEP) meeting:

*Name of SEP:* Small Grants Program—Cancer Epidemiology.

*Date:* May 6, 1997.

*Time:* 9 a.m.–3 p.m.

*Place:* The Latham Hotel—Georgetown, 3000 M Street, N.W., Washington, DC 20007.

*Contact Person:* John W. Abrell, Ph.D., Scientific Review Administrator, National

Cancer Institute, NIH, Executive Plaza North, Room 635B, 6130 Executive Boulevard, MSC 7410, Bethesda, MD 20892–7410, Telephone: 301/496–9767.

*Purpose/Agenda:* To evaluate and review grant applications.

This notice is being published less than 15 days prior to the meeting due to the urgent need to meet timing limitations imposed by the review and funding cycle.

The meeting will be closed in accordance with the provisions set forth in secs. 552b(c)(4) and 552b(c)(6), title 5 U.S.C. Applications and the discussions could reveal confidential trade secrets or commercial property such as patentable material and personal information concerning individuals associated with the applications, the disclosure of which would constitute a clearly unwarranted invasion of personal privacy.

(Catalog of Federal Domestic Assistance Program Numbers: 93.393, Cancer Cause and Prevention Research; 93.394, Cancer Detection and Diagnosis Research; 93.395, Cancer Treatment Research; 93.396, Cancer Biology Research; 93.397, Cancer Centers Support; 93.398, Cancer Research Manpower; 93.399, Cancer Control)

Dated: April 14, 1997.

**LaVerne Y. Stringfield,**

*Committee Management Officer, NIH.*

[FR Doc. 97–10182 Filed 4–18–97; 8:45 am]

BILLING CODE 4140–01–M

---

## DEPARTMENT OF HEALTH AND HUMAN SERVICES

### National Institutes of Health

### National Heart, Lung, and Blood Institute; Notice of Closed Meeting

Pursuant to Section 10(d) of the Federal Advisory Committee Act, as amended (5 U.S.C. Appendix 2), notice is hereby given of the following Initial Review Group (IRG) meeting.

*Name of IRG:* Clinical Trials Review Committee.

*Date:* June 22–24, 1997.

*Time:* 7:00 p.m.

*Place:* Holiday Inn Bethesda, 8120 Wisconsin Avenue, Bethesda, Maryland 20814.

*Contact Person:* Dr. Joyce A. Hunter, 6701 Rockledge Drive, Rm. 7192, MSC 7924, Bethesda, Maryland 20892, (301) 435–0287.

*Purpose/Agenda:* To review and evaluate grant applications.

The meeting will be closed in accordance with the provisions set forth in secs. 552b(c)(4) and 552b(c)(6), Title 5, U.S.C. Applications and the discussions could reveal confidential trade secrets or commercial property such as patentable material and personal information concerning individuals associated with the applications, the disclosure of which would constitute a clearly unwarranted invasion of personal privacy.

(Catalog of Federal Domestic Assistance Programs Nos. 93.837, Heart and Vascular Diseases Research; 93.838, Lung Diseases Research; and 93.839, Blood Diseases and Resources Research, National Institutes of Health)

Dated: April 14, 1997.

**LaVerne Y. Stringfield,**

*Committee Management Officer, NIH.*

[FR Doc. 97–10187 Filed 4–18–97; 8:45 am]

BILLING CODE 4140–01–M

---

## DEPARTMENT OF HEALTH AND HUMAN SERVICES

### National Institutes of Health

### National Institute of Child Health and Human Development; Notice of Closed Meeting

Pursuant to Section 10(d) of the Federal Advisory Committee Act, as amended (5 U.S.C. Appendix 2), notice is hereby given of the following National Institute of Child Health and Human Development Special Emphasis Panel (SEP) meeting:

*Name of Sep:* Specialized Clinical Fellowships (TELECONFERENCE).

*Date:* May 5, 1997.

*Time:* 1:00 a.m.—adjournment.

*Place:* 6100 Executive Boulevard, 6100 Building, Room 5E03, Rockville, Maryland 20852.

*Contact Person:* Hameed Khan, Ph.D., Scientific Review Administrator, NICHD, 6100 Executive Boulevard, 6100 Building, Room 5E01, Rockville, Maryland 20852, Telephone: 301–496–1485.

*Purpose/Agenda* To evaluate and review grant applications.

The meeting will be closed in accordance with the provisions set forth in secs. 552b(c)(4) and 552b(c)(6), Title 5, U.S.C. The discussions of these applications could reveal confidential trade secret or commercial property such as patentable material and personal information concerning individuals associated with the applications, the disclosure of which would constitute a clearly unwarranted invasion of personal privacy.

(Catalog of Federal Domestic Assistance Program Nos. [93.864, Population Research and No. 93.865, Research for Mothers and Children, National Institutes of Health)

Dated: April 14, 1997.

**LaVerne Y. Stringfield,**

*Committee Management Officer, NIH.*

[FR Doc. 97–10183 Filed 4–18–97; 8:45 am]

BILLING CODE 4140–01–M

---

## DEPARTMENT OF HEALTH AND HUMAN SERVICES

### National Institutes of Health

### National Institute of Child Health and Human Development; Notice of Closed Meetings

Pursuant to Section 10(d) of the Federal Advisory Committee Act, as amended (5 U.S.C. Appendix 2), notice is hereby given of the following National Institute of Child Health and Human Development Special Emphasis Panel (SEP) meetings.

*Name of SEP:* Small Research and Conference Grant Review (TELECONFERENCE).

*Date:* April 25, 1997.

*Time:* 10:00 a.m.—adjournment.

*Place:* 6100 Executive Boulevard, 6100 Building, Room 5E03, Rockville, Maryland 20852.

*Contact Person:* Edgar E. Hanna, Ph.D., Scientific Review Administrator, NICHD, 6100 Executive Boulevard, 6100 Building, Room 5E01, Rockville, Maryland 20852, Telephone: 301–496–1485.

*Name of SEP:* Child Health Research Centers.

*Date:* April 16–17, 1997.

*Time:* April 16–8:00 a.m.–5:00 p.m., April 17–8:00 a.m.—adjournment.

*Place:* The Ramada Inn in Bethesda, 8400 Wisconsin Avenue, Bethesda, Maryland 20814.

*Contact Person:* Edgar E. Hanna, Ph.D., Scientific Review Administrator, NICHD, 6100 Executive Boulevard, 6100 Building, Room 5E01, Rockville, Maryland 20852, Telephone: 301–496–1485.

*Purpose/Agenda:* To evaluate and review grant applications.

These meetings will be closed in accordance with the provisions set forth in secs. 552b(c)(4) and 552b(c)(6), Title 5, U.S.C. The discussions of these applications could reveal confidential trade secrets or commercial property such as patentable material and personal information concerning individuals associated with these applications, the disclosure of which would constitute a clearly unwarranted invasion of personal privacy.

This notice is being published less than 15 days prior to the meetings due to the urgent need to meet timing limitations imposed by the review and funding cycle.

(Catalog of Federal Domestic Assistance Program Nos. [93.864, Population Research and No. 93.865, Research for Mothers and Children,] National Institutes of Health)

Dated: April 14, 1997.

**LaVerne Y. Stringfield,**

*Committee Management Officer, NIH.*

[FR Doc. 97–10186 Filed 4–18–97; 8:45 am]

BILLING CODE 4140–01–M

## DEPARTMENT OF HEALTH AND HUMAN SERVICES

### National Institutes of Health

### National Institute of Allergy and Infectious Diseases; Notice of Meetings: National Advisory Allergy and Infectious Diseases Council; Acquired Immunodeficiency Syndrome Subcommittee; Allergy and Immunology Subcommittee; Microbiology and Infectious Diseases Subcommittee

Pursuant to Pub. L. 92–463, notice is hereby given of the meeting of the National Advisory Allergy and Infectious Diseases Council, National Institute of Allergy and Infectious Diseases, and its subcommittees on May 19–20, 1997. Meetings of the Council, NAAIDC Allergy and Immunology Subcommittee, NAAIDC Microbiology and Infectious Diseases Subcommittee and the NAAIDC Acquired Immunodeficiency Syndrome Subcommittee will be held at the National Institutes of Health, Bethesda, Maryland.

The meeting of the full Council will be open to the public on May 19 in Building 31C, Conference Room 6, from approximately 1 p.m. until 3:30 p.m. for opening remarks of the Institute Director, discussion of procedural matters, Council business, and a report from the Institute Director which will include a discussion of budgetary matters. The primary program will include an update on activities of the NIAID Managed Care Working Group, and NIAID's intramural efforts in clinical research through tele-medicine.

On May 20 the meetings of the NAAIDC Allergy and Immunology Subcommittee and NAAIDC Microbiology and Infectious Diseases Subcommittee will be open to the public from 8:30 a.m. until adjournment. The subcommittee will meet in Building 31C, conference rooms 8 and 6 respectively.

The meeting of the NAAIDC Acquired Immunodeficiency Syndrome Subcommittee will be open to the public from 8:30 a.m. until adjournment, on May 20. The subcommittee will meet in the Natcher Building, Conference Room LLD.

In accordance with the provisions set forth in secs. 552b(c)(4) and 552b(c)(6), Title 5, U.S.C. and sec. 10(d) of Pub. L. 92–463, the meeting of the NAAIDC Acquired Immunodeficiency Syndrome Subcommittee, NAAIDC Allergy and Immunology Subcommittee and the NAAIDC Microbiology and Infectious Diseases Subcommittee will be closed to the public for approximately four hours for review, evaluation, and discussion of individual grant applications. It is anticipated that this will occur from 8:30 a.m. until 1 p.m. on May 19, in conference rooms 7, 8 and 6 respectively. The meeting of the full Council will be closed from 3:30 p.m. until recess on May 19 for the review, discussion, and evaluation of individual grant applications. These applications and the discussions could reveal confidential trade secrets or commercial property such as patentable material, and personal information concerning individuals associated with the applications, disclosure of which would constitute a clearly unwarranted invasion of personal privacy.

Ms. Claudia Goad, Committee Management Officer, National Institute of Allergy and Infectious Diseases, Solar Building, Room 3C26, National Institutes of Health, Bethesda, Maryland 20892, 301–496–7601, will provide a summary of the meeting and a roster of committee members upon request. Individuals who plan to attend and need special assistance, such as sign language interpretation or other reasonable accommodations, should contact Ms. Goad in advance of the meeting.

Dr. Lawrence Deyton, Acting Director, Division of Extramural Activities, NIAID, NIH, Solar Building, Room 3C20, 6003 Executive Boulevard, Rockville, Maryland 20892, telephone 301–496–7291, will provide substantive program information.

(Catalog of Federal Domestic Assistance Program Nos. 93.855 Immunology, Allergic and Immunologic Diseases Research, 93.856, Microbiology and Infectious Disease Research, National Institutes of Health)

Dated: April 14, 1997.

**LaVerne Y. Stringfield,**

*Committee Management Officer, NIH.*

[FR Doc. 97–10189 Filed 4–18–97; 8:45 am]

BILLING CODE 4140–01–M

---

## DEPARTMENT OF HEALTH AND HUMAN SERVICES

### National Institute of Health

### National Institute of Allergy and Infectious Diseases; Notice of Meeting: Board of Scientific Counselors

Pursuant to Pub. L. 92–463, notice is hereby given of the meeting of the Board of Scientific Counselors, National Institute of Allergy and Infectious Diseases, on June 9–11, 1997. The meeting will be held in the 4th Floor Conference Room, Building 4, National Institutes of Health, 9000 Rockville Pike, Bethesda, Maryland.

The meeting will be open to the public on June 9 from 10 a.m. to 12 p.m. and from 1:30 p.m. to 4:15 p.m. On June 10 the meeting will be open from 8:30 a.m. until 11:45 a.m. During the open sessions, the permanent staff of the Laboratory of Parasitic Diseases will present and discuss their immediate, past and present research activities.

In accordance with the provisions set forth in Sec. 552b(c)(6), Title 5, U.S.C. and Sec. 10(d) of Pub. L. 92–463, the meeting will be closed to the public on June 9 from 8:30 a.m. until 10 a.m., from 12 p.m. until 1:30 p.m., and from 4:15 p.m. until recess; on June 10 from 11:45 a.m. until recess; and on June 11 from 8:30 a.m. until adjournment, for the review, discussion, and evaluation of individual intramural programs and projects conducted by the National Institute of Allergy and Infectious Diseases, including consideration of personal qualifications and performance, the competence of individual investigators, and similar items, the disclosure of which would constitute a clearly unwarranted invasion of personal privacy.

Ms. Claudia Goad, Committee Management Officer, National Institute of Allergy and Infectious Diseases, Solar Building, Room 3C26, National Institutes of Health, Bethesda, Maryland 20892, 301–496–7601, will provide a summary of the meeting and a roster of committee members upon request. Individuals who plan to attend and need special assistance, such as sign language interpretation or other reasonable accommodations, should contact Ms. Goad in advance of the meeting.

Dr. Thomas J. Kindt, Executive Secretary, Board of Scientific Counselors, NIAID, National Institutes of Health, Building 10, Room 4A31, telephone 301–496–3006, will provide substantive program information.

(Catalog of Federal Domestic Assistance Program No. 93–301, National Institutes of Health)

Dated: April 14, 1997.

**LaVerne Y. Stringfield,**

*Committee Management Officer, NIH.*

[FR Doc. 97–10190 Filed 4–18–97; 8:45 am]

BILLING CODE 4140–01–M

---

## DEPARTMENT OF HEALTH AND HUMAN SERVICES

### National Institutes of Health

### National Institute of Mental Health; Notice of Closed Meeting

Pursuant to Section 10(d) of the Federal Advisory Committee Act, as

amended (5 U.S.C. Appendix 2), notice is hereby given of the following meeting of the National Institute of Mental Health Special Emphasis Panel:

*Agenda/Purpose:* To review and evaluate grant applications.

*Committee Name:* National Institute of Mental Health Special Emphasis Panel.

*Date:* April 22, 1997.

*Time:* 1 p.m.

*Place:* Parlawn Building, Room 9C–26, 5600 Fishers Lane, Rockville, MD 20857.

*Contact Person:* Phyllis D. Artis, Parklawn Building, Room 9C–26, 5600 Fishers Lane, Rockville, MD 20857, Telephone: 301, 443–6470.

The meeting will be closed in accordance with the provisions set forth in secs. 552b(c)(4) and 552b(c)(6), Title 5 U.S.C. Applications and/or proposals and the discussions could reveal confidential trade secrets or commercial property such as patentable material and personal information concerning individuals associated with the applications and/or proposals, the disclosure of which would constitute a clearly unwarranted invasion of personal privacy.

This notice is being published less than fifteen days prior to the meeting due to the urgent need to meet timing limitations imposed by the review and funding cycle.

(Catalog of Federal Domestic Assistance Program Numbers 93.242, 93.281, 93.282)

Dated: April 15, 1997.

**LaVeen Ponds,**

*Acting Committee Management Officer, NIH.*

[FR Doc. 97–10240 Filed 4–18–97; 8:45 am]

BILLING CODE 4140–61–M

---

## DEPARTMENT OF HEALTH AND HUMAN SERVICES

### National Institutes of Health

### National Library of Medicine; Notice of Closed Meeting

Pursuant to Section 10(d) of the Federal Advisory Committee Act, as amended (5 U.S.C., Appendix 2), notice is hereby given of the following National Library of Medicine Special Emphasis Panel (SEP) meeting.

*Name of SEP:* National Library of Medicine Special Emphasis Panel.

*Date:* April 16, 1997.

*Place:* Conference Call, 8600 Rockville Pike, Bldg. 38A, Rm. 5S–522, Bethesda, MD 20894.

*Contact:* Dr. Roger W. Dahlen, Chief, Biomedical Information Support Branch, EP, 8600 Rockville Pike, Bldg. 38A, Rm. 5S–522, Bethesda, MD 20894, 301–496–4221.

*Purpose/Agenda:* To review a grant application from the University of Wisconsin.

The meeting will be closed in accordance with the provisions set forth in secs. 552b(c)(4) and 552b(c)(6), Title 5, U.S.C. Applications and/or proposals and the discussions could reveal confidential trade secrets or commercial property such as patentable material and personal information concerning individuals associated with the applications and/or proposals, the disclosure of which would constitute a clearly unwarranted invasion of personal privacy.

This notice is being published less than 15 days prior to the meeting due to the urgent need to meet timing limitations imposed by the review and funding cycle.

(Catalog of Federal Domestic Assistance Program No. 93–879—Medical Library Assistance, National Institutes of Health)

Dated: April 14, 1997.

**LaVerne Y. Stingfield,**

*Committee Management Officer, NIH.*

[FR Doc. 97–10181 Filed 4–18–97; 8:45 am]

BILLING CODE 4140–01–M

---

## DEPARTMENT OF HEALTH AND HUMAN SERVICES

### National Institutes of Health

### Division of Research Grants; Notice of Closed Meetings

Pursuant to Section 10(d) of the Federal Advisory Committee Act, as amended (5 U.S.C. Appendix 2), notice is hereby given of the following Division of Research Grants Special Emphasis Panel (SEP) meetings:

*Purpose/Agenda:* To review individual grant applications.

*Name of SEP:* Biological and Physiological Sciences.

*Date:* April 23, 1997.

*Time:* 1:30 p.m.

*Place:* NIH, Rockledge 2, Room 4152, Telephone Conference.

*Contact Person:* Dr. Marcelina Powers, Scientific Review Administrator, 6701 Rockledge Drive, Room 4152, Bethesda, Maryland 20892, (301) 435–1720.

*Name of SEP:* Microbiological and Immunological Sciences.

*Date:* April 25, 1997.

*Time:* 3:00 p.m.

*Place:* NIH, Rockledge 2, Room 4184, Telephone Conference.

*Contact Person:* Dr. Martin Slater, Scientific Review Administrator, 6701 Rockledge Drive, Room 4184, Bethesda, Maryland 20892, (301) 435–1149.

*Name of SEP:* Biological and Physiological Sciences.

*Date:* April 28, 1997.

*Time:* 3:30 p.m.

*Place:* NIH, Rockledge 2, Room 4152, Telephone Conference.

*Contact Person:* Dr. Marcelina Powers, Scientific Review Administrator, 6701 Rockledge Drive, Room 4152, Bethesda, Maryland 20892, (301) 435–1720.

*Name of SEP:* Biological and Physiological Sciences.

*Date:* April 29, 1997.

*Time:* 1:30 p.m.

*Place:* NIH, Rockledge 2, Room 4152, Telephone Conference.

*Contact Person:* Dr. Marcelina Powers, Scientific Review Administrator, 6701 Rockledge Drive, Room 4152, Bethesda, Maryland 20892, (301) 435–1720.

This notice is being published less than 15 days prior to the above meetings due to the urgent need to meet timing limitations imposed by the grant review and funding cycle.

*Name of SEP:* Biological and Physiological Sciences.

*Date:* May 6 1997.

*Time:* 2:00 p.m.

*Place:* NIH, Rockledge 2, Room 4152, Telephone Conference.

*Contact Person:* Dr. Marcelina Powers, Scientific Review Administrator, 6701 Rockledge Drive, Room 4152, Bethesda, Maryland 20892, (301) 435–1720.

*Name of SEP:* Biological and Physiological Sciences.

*Date:* May 9, 1997.

*Time:* 4:00 p.m.

*Place:* NIH, Rockledge 2, Room 4148, Telephone Conference.

*Contact Person:* Dr. Philip Perkins, Scientific Review Administrator, 6701 Rockledge Drive, Room 4148, Bethesda, Maryland 20892, (301) 435–1718.

*Name of SEP:* Biological and Physiological Sciences.

*Date:* May 22, 1997.

*Time:* 3:00 p.m.

*Place:* NIH, Rockledge 2, Room 4148, Telephone Conference.

*Contact Person:* Dr. Philip Perkins, Scientific Review Administrator, 6701 Rockledge Drive, Room 4148, Bethesda, Maryland 20892, (301) 435–1718.

The meeting will be closed in accordance with the provisions set forth in secs. 552b(c)(4) and 552b(c)(6), Title 5, U.S.C. Applications and/or proposals and the discussions could reveal confidential trade secrets or commercial property such as patentable material and personal information concerning individuals associated with the applications and/or proposals, the disclosure of which would constitute a clearly unwarranted invasion of personal privacy.

(Catalog of Federal Domestic Assistance Program Nos. 93.306, 93.337, 93.393–93.396, 93.837–93.844, 93.846–93.878, 93.892, 93.893, National Institutes of Health HHS)

Dated: April 14, 1997.

**LeVerne Y. Stringfield,**

*Committee Management Officer, NIH.*

[FR Doc. 97–10188 Filed 4–18–97; 8:45 am]

BILLING CODE 4140–01–M

---

## DEPARTMENT OF HEALTH AND HUMAN SERVICES

### National Institutes of Health

### Division of Research Grants; Notice of Closed Meetings

Pursuant to Section 10(d) of the Federal Advisory Committee Act, as amended (5 U.S.C. Appendix 2), notice is hereby given of the following Division of Research Grants Special Emphasis Panel (SEP) meetings:

*Purpose/Agenda:* To review individual grant applications.
*Name of SEP:* Clinical Sciences.
*Date:* April 28, 1997.
*Time:* 10:00 a.m.
*Place:* Marriott Courtyard, Crystal City, VA.
*Contact Person:* Dr. J. Terrell Hoffeld, Scientific Review Administrator, 6701 Rockledge Drive, Room 4116, Bethesda, Maryland 20892, (301) 435–1781.

*Name of SEP:* Behavioral and Neurosciences.
*Date:* April 29, 1997.
*Time:* 1:00 p.m.
*Place:* NIH, Rockledge 2, Room 5178, Telephone Conference.
*Contact Person:* Dr. Joseph Kimm, Scientific Review Administrator, 6701 Rockledge Drive, Room 5178, Bethesda, Maryland 20892, (301) 435–1249.

*Name of SEP:* Chemistry and Related Sciences.
*Date:* April 29, 1997.
*Time:* 3:00 p.m.
*Place:* NIH, Rockledge 2, Room 5150, Telephone Conference.
*Contact Person:* Dr. Zakir Bengali, Scientific Review Administrator, 6701 Rockledge Drive, Room 5150, Bethesda, Maryland 20892, (301) 435–1742.

*Name of SEP:* Chemistry and Related Sciences.
*Date:* April 30–May 1, 1997.
*Time:* 4:30 p.m.
*Place:* Ramada Inn, Bethesda, MD.
*Contact Person:* Dr. Zakir Bengali, Scientific Review Administrator, 6701 Rockledge Drive, Room 5150, Bethesda, Maryland 20892, (301) 435–1742.

This notice is being published less than 15 days prior to the above meetings due to the urgent need to meet timing limitations imposed by the grant review and funding cycle.

*Name of SEP:* Behavioral and Neurosciences.
*Date:* May 6, 1997.
*Time:* 10:00 a.m.
*Place:* NIH, Rockledge 2, Room 5182, Telephone Conference.
*Contact Person:* Dr. Carl Banner, Scientific Review Administrator, 6701 Rockledge Drive, Room 5182, Bethesda, Maryland 20892, (301) 435–1251.

The meetings will be closed in accordance with the provisions set forth in secs. 552b(c)(4) and 552b(c)(6), Title 5, U.S.C. Applications and/or proposals and the discussions could reveal confidential trade secrets or commercial property such as patentable material and personal information concerning individuals associated with the applications and/or proposals, the disclosure of which would constitute a clearly unwarranted invasion of personal privacy.

(Catalog of Federal Domestic Assistance Program Nos. 93.306, 93.333, 93.337, 93.393–93.396, 93.837–93.844, 93.846–93.878, 93.892, 93.893, National Institutes of Health, HHS)

Dated: April 15, 1997.

**LaVeen Ponds,**

*Acting Committee Management Officer, NIH.*

[FR Doc. 97–10239 Filed 4–18–97; 8:45 am]

BILLING CODE 4140–01–M

---

## DEPARTMENT OF HEALTH AND HUMAN SERVICES

### Public Health Service

### National Institute of Environmental Health Sciences; National Toxicology Program; Announcement of Nominated Chemicals Approved and Under Consideration for Toxicological Studies by the National Toxicology Program (NTP)—Request for Comments

As part of an effort to earlier inform and obtain public input into the selection of chemicals for evaluation, the National Toxicology Program (NTP) routinely announces in the **Federal Register** chemicals nominated to the Program, recommended for toxicological studies by the Interagency Committee for Chemical Evaluation and Coordination (ICCEC), and approved for study by the NTP Executive Committee. This announcement will allow interested parties to comment and provide information on chemicals under consideration for study. The Program would welcome receiving toxicology and carcinogenesis information from completed, ongoing, or planned studies by others, as well as current production data, human exposure information, use patterns, and environmental occurrence for any of the chemicals listed in this announcement. To provide comments or information, please contact Dr. William Eastin at the address given below within 60 days of the appearance of this announcement.

At their meeting on February 7, 1997, the ICCEC reviewed and recommended twelve chemicals or chemical classes for metabolism, toxicity, or carcinogenicity studies. On February 27, 1997, the NTP Executive Committee reviewed and approved the recommendations of the ICCEC. Chemicals with CAS numbers, nomination source, types of studies under consideration, and other supporting information are given in the table. Contact may be made by mail to: Dr. William Eastin, NIEHS/NTP, P. O. Box 12233, Research Triangle Park, North Carolina 27709; by telephone at (919) 541–7941; by FAX at (919) 541–4714; or by email at Eastin@NIEHS.NIH.GOV.

Dated: April 10, 1997.

**Kenneth Olden,**

*Director, National Institute of Environmental Health Sciences and National Toxicology Program.*

ATTACHMENT—CHEMICALS APPROVED FOR STUDY BY THE NTP EXECUTIVE COMMITTEE ON FEBRUARY 27, 1997

| Chemical (CAS number) | Nomination source | Testing recommendations | Study rationale remarks |
|---|---|---|---|
| Bromodichloroacetic Acid (71333–14–7). | EPA | Carcinogenicity; Reproductive, neurotoxicity screen; Genetic toxicity. | Water disinfectant byproduct, part of a class study. |
| 2-Butyne-1,4-diol (110–65–6) | NIEHS | Short and long-term toxicity; reproductive, neurotoxicity screen; metabolism; mechanistic studies. | Industrial intermediate, stabilizer, corrosion inhibitor.<br>Coordinate with EPA the testing planned through OECD-SIDS. |
| Dibromoacetonitrile (3252–42–5) | EPA | Carcinogenicity; Reproductive, neurotoxicity screen; in vivo micronucelus. | Water disinfectant byproduct, part of a class study. |
| trans-1,4-Dichloro-2-butene (110–57–6). | NIEHS | Carcinogenicity; Short-term toxicity. | High production volume.<br>Chemical intermediate.<br>Human exposure not well defined.<br>Extensive toxicity and carcinogenesis data received from industry may lead to deferral. |
| Ethyl Bromoacetate (105–36–2) | NCI | Metabolism studies | May hydrolyze to bromoacetic acid. |

ATTACHMENT—CHEMICALS APPROVED FOR STUDY BY THE NTP EXECUTIVE COMMITTEE ON FEBRUARY 27, 1997—Continued

| Chemical (CAS number) | Nomination source | Testing recommendations | Study rationale remarks |
|---|---|---|---|
| | | | Odorant in toxic gases. Chemical intermediate. |
| α-Hydroxy Acids (and their salts) | FDA | Phototoxicity; Chronic toxicity | FDA's FY 1997 priority nomination. |
| Glycolic Acid (79–14–1) | | | Skin care product uses. |
| Lactic Acid (50–21–5) | | | Class study. |
| Methyl Isobutyl Ketone (108–10–1) | NCI | Carcinogenicity | High production volume. Environmental exposure. |
| Methylamine (74–89–5) | NCI; Private individual | Pharmacokinetics | Component of many foods. |
| β-Myrcene (123–35–3) | NIEHS | Metabolism studies; Consider for carcinogenicity. | May be metabolized to a diepoxide. High production and high level of natural exposure. |
| Octachloronaphthalene (2234–13–1). | NCI | Liver P450 enzyme induction; Estrogenic activity. | Potential to bioaccumulate and enter food chain as component of halowaxes. |
| Propargyl Alcohol (107–19–7) | NCI | Subchronic toxicity | High production and human exposure. |
| Sodium Thioglycolate (367–51–1) | NCI | Reproductive toxicity | High production and occupational and human exposure in hair care products. |

[FR Doc. 97–10180 Filed 4–18–97; 8:45 am]

BILLING CODE 4140–01–M

## DEPARTMENT OF HEALTH AND HUMAN SERVICES

### Substance Abuse and Mental Health Services Administration

### Supplemental Awards for Women and Children's Residential Treatment Program Grantees

**AGENCY:** Center for Substance Abuse Treatment (CSAT), Substance Abuse and Mental Health Services Administration (SAMHSA), HHS.

**ACTION:** Availability of Supplemental Funds for Currently Funded Grantees in CSAT Woman and Children's Program for Pregnant and Postpartum Women (PPW) and Residential Treatment Program for Women and their Children (RWC).

**SUMMARY:** This notice is to inform the public that CSAT is making available approximately $1.5 million for supplemental awards in FY 1997 to existing PPW and RWC grantees in the Women and Children's Program to expand and/or enhance services for children. Competition is being limited to the 53 currently funded PPW and RWC grantees with at least one year of funding remaining as of September 30, 1997 (as reflected on the current Notice of Grant Award). Given the necessarily short implementation timeframe and limited funds available for this activity, and the need for reliable evaluation designs that can easily incorporate additional children's services, the existing CSAT treatment grant projects for women and children are the only projects that can effectively implement the services to be provided under this GFA. These projects have already demonstrated that they can effectively provide therapeutic services for children, and operate within well established infrastructures with knowledgeable, trained staff in addressing children's issues. They also have demonstrated solid and proven experience in the provision of services for children. Finally, these projects are required by legislation to provide comprehensive services for children of addicted women. These supplements will enhance the delivery of the statutorily-required services. Applications will be considered for funding on the basis of their overall technical merit as determined through the peer and CSAT National Advisory Council review process.

Supplemental awards will be provided to PPW and RWC grantees to expand and/or enhance services for children of substance abusing parents. Grantees may apply for support to expand and/or enhance services for children within the scope of the current residential treatment grant, and may also apply for funds to increase the availability of child care services for women in any component of treatment under the administration of the sub-recipient treatment provider. The maximum amount of any one grant award will be $300,000.

**Authority:** Supplemental awards will be made under authority of sections 508 and 510 of the Public Health Service Act, as amended (42 U.S.C. 290bb–1 and 42 U.S.C. 290bb–3, respectively.)

**CONTACT:** Maggie Wilmore, Center for Substance Abuse Treatment, SAMHSA, Rockwall II Building, Suite 7A–145, 5600 Fishers Lane, Rockville, Maryland 20857 (Telephone: 301 443–8216).

The Catalog of Federal Domestic Assistance (CDFA) numbers are 93.101 for the PPW Program and 93.102 for the RWC Program.

Dated: April 15, 1997.

**Richard Kopanda,**

*Executive Officer, Substance Abuse and Mental Health Services Administration.*

[FR Doc. 97–10248 Filed 4–18–97; 8:45 am]

BILLING CODE 4162–20–P

## DEPARTMENT OF THE INTERIOR

### Bureau of Land Management

**[CO–078–97–1990–00]**

### Supplemental Environmental Impact Statement (EIS) on Oil and Gas Development

**AGENCY:** Bureau of Land Management, Interior.

**ACTION:** Notice of intent to prepare a Supplemental Environmental Impact Statement (EIS) on Oil and Gas Development in the Glenwood Springs Resource Area, Colorado.

**SUMMARY:** Pursuant to sec. 102 of the National Environmental Policy Act of 1969 and sec. 202 and sec. 303 of the Federal Land Policy and Management Act of 1976, the Bureau of Land

Management will be preparing a supplemental EIS on the impacts of oil and gas development in the Glenwood Springs Resource Area.

**DATES:** Comments will be accepted until May 21, 1997.

**ADDRESSES:** Comments should be sent to the Area Manager, Glenwood Springs Resource Area, Bureau of Land Management, P.O. Box 1009, Glenwood Springs, CO 81602, ATTN: Oil and Gas EIS.

**FOR FURTHER INFORMATION CONTACT:** Steve Moore, (970) 947–2813.

**SUPPLEMENTARY INFORMATION:** Oil and gas leasing and development in the Glenwood Springs Resource Area (GSRA) was considered in the Colorado Oil and Gas Leasing and Development EIS (COGEIS, January, 1991). The assumptions about the level of development made in the original EIS are no longer valid and a modification is required to reflect new information about the level of development. The original EIS assumed construction of 90 wells over 20 years, at an average spacing of 160 to 320 acres per well; since publication of the EIS it has become apparent that actual development in the GSRA will exceed the level evaluated in that document and that, in some locales, the density will be greater than 160 acres per well. The supplemental document will evaluate a higher level of development and higher densities.

Mitigation measures for oil and gas development were developed in the GSRA Resource Management Plan (RMP) and in the COGEIS. The supplement will evaluate expanded development in the context of those measures and will also consider new mitigation measures. Other areas of evaluation will include: the effectiveness of additional lease stipulations in mitigating impacts; the success achieved in reclaiming areas disturbed by development; the impacts on wildlife.

Additionally, the GSRA may acquire all or portions of Naval Oil Shale Reserves (NOSR) 1 and 3 during the supplemental EIS process. The transfer of these lands from the Department of Energy to the Bureau of Land Managment is currently being considered by Congress. Should the transfer occur during preparation of the supplemental EIS, the GSRA will consider the possibility of including in the analysis up to 6,000 acres of NOSR 3 which is already experiencing oil and gas development. This portion of NOSR 3 is immediately adjacent to those BLM lands being developed for oil and gas, is similar in character to the BLM lands and would likely be subject to the same types of stipulations.

The supplemental EIS process will take place during the spring and summer, 1997. A draft EIS is planned for August, 1997.

Scoping will include a news release announcing the beginning of the supplemental process and letters to all participants in the original EIS process and additional interested parties. A question and answer sheet which further describes the reasons for the supplement and some of the issues to be addressed is available upon request.

**Michael S. Mottice,**

*Area Manager.*

[FR Doc. 97–10185 Filed 4–18–97; 8:45 am]

BILLING CODE 4310–JB–P

---

## DEPARTMENT OF THE INTERIOR

## Bureau of Land Management

**[NV–030–1430–01; NVN 61131]**

## Notice of Realty Action; Recreation and Public Purposes Act Classification; Mineral County, NV

**AGENCY:** Bureau of Land Management, Interior.

**ACTION:** Notice.

**SUMMARY:** The following described land, comprising 15.00 acres, has been examined and is determined to be suitable for classification for lease or conveyance pursuant to the authority in the Recreation and Public Purposes Act, as amended (43 U.S.C. 869 et seq.):

**Mt. Diablo Meridian, Nevada**

T. 7 N., R. 34 E.
Sec. 24, SE¼NE¼SW¼SW¼,
NE¼SE¼SW¼SW¼,
S½NW¼SE¼SW¼,
N½SW¼SE¼SW¼.

**SUPPLEMENTARY INFORMATION:** The public land is located northwest of Mina in Mineral County. The land is not needed for Federal purposes. Lease or conveyance is consistent with current BLM land use planning and would be in the public interest. Mineral County has expressed an interest in constructing a solid waste transfer station on the site.

The patent, when issued will be subject to the provisions of the Recreation and Public Purposes Act and to all applicable regulations of the Secretary of the Interior, and the following reservations to the United States:

1. A right-of-way thereon for ditches and canals constructed by the authority of the United States. Act of August 30, 1890 (43 U.S.C. 945).

2. All mineral deposits in the land so patented, and to it, or persons authorized by it, the right to prospect for, mine and remove such deposits from the same under applicable law and regulations to be established by the Secretary of the Interior.

Upon publication of this notice in the **Federal Register**, the lands will be segregated from all other forms of appropriation under the public land laws, including the general mining laws but not the mineral leasing laws, the material disposal laws, or the Geothermal Steam Act. The segregation shall terminate upon issuance of a conveyance document or publication in the Federal Register of an order specifying the date and time of opening.

**DATES:** On or before June 5, 1997, interested parties may submit comments.

**ADDRESSES:** Written comments should be sent to: Carson City District Office, Bureau of Land Management, 1535 Hot Springs Drive, Carson City, NV 89706–0638. Any adverse comments will be reviewed by the State Director. In the absence of any adverse comments, the classification will become effective 60 days from the date of publication of this notice in the **Federal Register**.

**FOR FURTHER INFORMATION CONTACT:** Charles J. Kihm, Carson City District Realty Specialist, Bureau of Land Management, 1535 Hot Springs Road, Carson City, Nevada 89706–0638; (702) 885–6000.

Dated: April 11, 1997.

**Thomas J. Abbett,**

*Acting Assistant District Manager, Non-Renewable Resources.*

[FR Doc. 97–10184 Filed 4–18–97; 8:45 am]

BILLING CODE 4310–HC–M

---

## DEPARTMENT OF THE INTERIOR

## Bureau of Land Management

**[OR–130–1220–00; GP7–0146]**

## Notice of User Fees in the Yakima River Canyon

**AGENCY:** Spokane District Office, Wenatchee Resource Area, Bureau of Land Management,

**ACTION:** Notice of intent to charge user fees at two Bureau of Land Management (BLM) recreation sites in the Yakima River Canyon, Washington.

**SUMMARY:** Effective May 15, 1997, the Bureau of Land Management will begin charging a site use fee at its Roza and Squaw Creek recreation sites in the Yakima River Canyon.

This fee will cover all approved activities at both sites, including

camping at designated sites on a first come, first served basis.

The site use fee will be charged from May 15 through October 15 of each year and is valid at both Squaw Creek and Roza Recreation Sites. Fees are $2.00 per vehicle per day, and a seasonal use permit is also available for a fee of $15.00 per vehicle.

**EFFECTIVE DATE:** Charging fees at both recreation sites are effective May 15, 1997.

**FOR FURTHER INFORMATION CONTACT:** Seasonal permits may be obtained at the Bureau of Land Management, Wenatchee Resource Area Office, Attention: Seasons Pass, 915 Walla Walla, Wenatchee, Washington 98801–1521; (509) 665–2100.

**SUPPLEMENTARY INFORMATION:** The authority for charging user fees is provided in the Land and Water Conservation Fund Act (LWCFA) of 1965, and subsequent regulations contained in Title 36 CFR part 71.

Dated: April 14, 1997.

**Cathy L. Harris,**

*Acting District Manager.*

[FR Doc. 97–10120 Filed 4–18–97; 8:45 am]

BILLING CODE 4310–33–P

## DEPARTMENT OF THE INTERIOR

### Bureau of Land Management

**[ID–957–14309–00]**

### Idaho: Filing of Plats of Survey; Idaho

The plat of the following described land will be officially filed in the Idaho State Office, Bureau of Land Management, Boise, Idaho, effective 9:00 a.m. May 27, 1997.

The plat representing the dependent resurvey of the south boundary of the Boise Barracks Military Reservation in T. 3 N., R. 2 E., Boise Meridian, Idaho, Group No. 981, was accepted on April 11, 1997.

This survey was executed to meet certain administrative needs of the Bureau of Land Management.

All inquiries concerning the survey of the above described land must be sent to the Chief, Cadastral Survey, Idaho State Office, Bureau of Land Management, 1387 S. Vinnell Way, Boise, Idaho, 83709–1657.

Dated: April 11, 1997.

**Duane E. Olsen,**

*Chief Cadastral Surveyor for Idaho.*

[FR Doc. 97–10229 Filed 4–18–97; 8:45 am]

BILLING CODE 4310–GG–M

## DEPARTMENT OF THE INTERIOR

### Minerals Management Service

### Agency Information Collection Activities: Proposed Collection; Comment Request

**AGENCY:** Minerals Management Service (MMS), Interior.

**ACTION:** Notice of extension of a currently approved information collection.

**SUMMARY:** As part of its continuing effort to reduce paperwork and respondent burden, MMS invites the public and other Federal agencies to comment on a proposal to extend the currently approved collection of information discussed below. The Paperwork Reduction Act of 1995 (PRA) provides that an agency may not conduct or sponsor, and a person is not required to respond to, a collection of information unless it displays a currently valid Office of Management and Budget (OMB) control number.

**DATES:** Submit written comments by June 20, 1997.

**ADDRESSES:** Direct all written comments to the Rules Processing Team, Minerals Management Service, Mail Stop 4700, 381 Elden Street, Herndon, Virginia 20170–4817.

**FOR FURTHER INFORMATION CONTACT:** Alexis London, Rules Processing Team, telephone (703) 787–1600. You may also contact Alexis London to obtain a copy of this collection of information.

**SUPPLEMENTARY INFORMATION:**

*Title:* 30 CFR 250, Subpart A, General.

*OMB Control Number:* 1010–0030.

*Abstract:* The Outer Continental Shelf Lands Act (OCSLA), at 43 U.S.C. 1331 *et seq.*, requires the Secretary of the Interior (Secretary) to preserve, protect, and develop oil and gas resources in the OCS; make such resources available to meet the Nation's energy needs as rapidly as possible; balance orderly energy resource development with protection of the human, marine, and coastal environment; ensure the public a fair and equitable return on the resources offshore; and preserve and maintain free enterprise competition. To carry out these responsibilities, MMS has issued regulations as described in 30 CFR Part 250. Subpart A, General, of that part contains general requirements and procedures for oil and gas or sulfur operations in the OCS.

The MMS uses the information collected under subpart A to ensure that operations in the OCS are carried out in a manner that is safe and pollution free.

If respondents submit proprietary information, it will be protected under 30 CFR 250.18, Data and information to be made available to the public. No items of a sensitive nature are collected. The requirement to respond is mandatory.

*Description of Respondents:* Federal OCS oil and gas or sulphur lessees.

*Frequency:* On occasion, varies by section.

*Estimated Number of Respondents:* 130.

*Estimated Annual Burden:* 13,343 burden hours. Based on $35 per hour, the cost to respondents is $467,005.

*Estimated Other Annual Costs to Respondents:* MMS has identified no other cost burdens on respondents for providing this information.

*Comments:* The MMS will summarize written responses to this notice and address them in its submission for OMB approval. All comments will become a matter of public record. We will also consult with a representative sample of respondents. The estimates shown above are those currently approved by OMB for this collection of information. As a result of the consultations and comments we receive, we will make any necessary adjustments for our submission to OMB. In calculating the burden, MMS may have assumed that respondents perform many of the requirements and maintain records in the normal course of their activities. MMS considers these to be usual and customary. Commenters are invited to provide information if they disagree with this assumption and they should tell us what the burden hours and costs imposed by this collection of information are.

(1) The MMS specifically solicits comments on the following questions:

(a) Is the proposed collection of information necessary for the proper performance of MMS's functions, and will it be useful?

(b) Are the estimates of the burden hours of the proposed collection reasonable?

(c) Do you have any suggestions that would enhance the quality, clarity, or usefulness of the information to be collected?

(d) Is there a way to minimize the information collection burden on those who are to respond, including through the use of appropriate automated electronic, mechanical, or other forms of information technology?

(2) In addition, the PRA requires agencies to estimate the total annual cost burden to respondents or recordkeepers resulting from the collection of information. The MMS needs your comments on this item. Your response should split the cost estimate into two components:

(a) Total capital and startup cost component and

(b) Annual operation, maintenance, and purchase of services component.

Your estimates should consider the costs to generate, maintain, and disclose or provide the information. You should describe the methods you use to estimate major cost factors, including system and technology acquisition, expected useful life of capital equipment, discount rate(s), and the period over which you incur costs. Capital and startup costs include, among other items, computers and software you purchase to prepare for collecting information; monitoring, sampling, drilling, and testing equipment; and record storage facilities. Generally, your estimates should not include equipment or services purchased: (1) before October 1, 1995; (2) to comply with requirements not associated with the information collection; (3) for reasons other than to provide information or keep records for the Government; or (4) as part of customary and usual business or private practices.

*Bureau Clearance Officer:* Jo Ann Lauterbach, (202) 208–7744.

Dated: April 11, 1997.

**E.P. Danenberger,**

*Chief, Engineering and Operations Division.*

[FR Doc. 97–10227 Filed 4–18–97; 8:45 am]

BILLING CODE 4310–MR–M

---

## DEPARTMENT OF THE INTERIOR

## National Park Service

## Notice of Meeting of National Landmarks Committee of National Park System Advisory Board

**SUMMARY:** Notice is hereby given in accordance with the Federal Advisory Commission Act that a meeting of the National Landmarks Committee of the Secretary of the Interior's National Park System Advisory Board will be held at 9:00 a.m. on the following date and at the following location.

**DATES:** May 6, 1997.

**LOCATION:** Hearing Room 100, 800 North Capitol Street, NW, Washington, DC.

**FOR FURTHER INFORMATION CONTACT:** Kira Badamo, National Register, History and Education, National Park Service, P.O. Box 37127, Suite 310, Washington, DC 20013–7127. Telephone (202) 343–5279.

**SUPPLEMENTARY INFORMATION:** The purpose of the meeting of the National Landmarks Committee of the Secretary of the Interior's National Park System Advisory Board is to evaluate studies of historic properties in order to advise the full National Park System Advisory Board meeting on June 10, 1997, of the qualifications of properties being proposed for National Historic Landmark (NHL) designation, and to recommend to the full board those properties that the committee finds meet the criteria for designation for the National Historic Landmarks Program. The members of the History Areas Committee are:

Dr. Holly Anglin Robinson, Co-Chair
Mr. Parker Westbrook, Co-Chair
Dr. David Warren
Dr. Shereen Lerner
Mr. Jerry L. Rogers
Dr. John Vlach
Dr. Richard Guy Wilson
Ms. Elizabeth K. Meyer
Dr. James Horton, *ex officio*

The meeting will include presentations and discussions on the national historic significance and the historic integrity of a number of properties being nominated for National Historic Landmark designation. The meeting will be open to the public. However, facilities and space for accommodating members of the public are limited. Any member of the public may file for consideration by the committee written comments concerning nominations and matters to be discussed pursuant to 36 CFR Part 65. Comments should be submitted to Carol D. Shull, Chief, National Historic Landmarks Survey, and Keeper of the National Register of Historic Places, National Register, History and Education, National Park Service, P.O. Box 37127, Suite 310, Washington, DC 20013–7127. The nominations to be considered are:

**CALIFORNIA**

Golden Gate Bridge, San Francisco and Marin Counties
Mendocino Woodlands, Mendocino County

**CONNECTICUT**

Henry Whitfield House, 248 Old Whitfield Street, Guilford

**GEORGIA**

Pine Mountain, Harris County

**ILLINOIS**

Mazon Creek Fossil Beds, Grundy County

**KENTUCKY**

U.S. Marine Hospital, 2215 Portland Avenue, Louisville

**MAINE**

Roseway (Schooner), Camden
Victory Chimes (Schooner), Rockland

**MARYLAND**

College of Medicine of Maryland, 522 West Lombard Street, Baltimore

**MASSACHUSETTS**

Josiah Quincy House, 20 Muirhead Street, Quincy

**MINNESOTA**

St. Croix Recreational Demonstration Area, Pine County

**NEW YORK**

Kate Mullaney House, 350 8th Street, Troy, New York

**PENNSYLVANIA**

F. Julius LeMoyne House, 49 East Maiden Street, Washington

**RHODE ISLAND**

Isaac Bell, Jr. House, 70 Perry Street, Newport

**TEXAS**

Bastrop State Park, Bastrop County
Palmito Ranch Battlefield, Cameron County

**VERMONT**

Shelburne Farms, 102 Harbor Road, Shelburne

**U.S. VIRGIN ISLANDS**

Fort Frederik, Frederiksted, St. Croix
St. Thomas Synagogue, Crystal Gade, #16A–B, Queens Quarters, Charlotte Amalie, St. Thomas

**WISCONSIN**

Schoonmaker Reef, Wauwatosa
Van Hise Rock, Sauk County

**WYOMING**

Lake Guernsey State Park, Platte County

Also, should the necessary waivers be received, the committee will also be considering additional properties:

Dr. Fisk Holbrook Day House, 800 Milwaukee Avenue, Wauwatosa, Wisconsin, and Block Island Light House, Block Island, Rhode Island

The committee will also consider the following de-designation:

Mother Jones Prison, 305 Center Sreet, Pratt, West Virginia

Dated: April 14, 1997.

**Carol D. Shull,**

*Chief, National Historic Landmarks Survey and Keeper, National Register of Historic Places, National Park Service, Washington Office.*

[FR Doc. 97–10163 Filed 4–18–97; 8:45 am]

BILLING CODE 4310–70–P

## INTERNATIONAL TRADE COMMISSION

**[Investigation No. 337–TA–382]**

## Notice of Commission Decision to Review Portions of an Initial Determination, Not To Review the Remainder of the Initial Determination, and Schedule for Filing of Written Submissions on the Issues Under Review and on Remedy, the Public Interest, and Bonding

In the Matter of: Certain Flash Memory Circuits and Products Containing Same.

**AGENCY:** International Trade Commission.

**ACTION:** Notice.

**SUMMARY:** Notice is hereby given that the U.S. International Trade Commission has determined to review portions of the final initial determination issued by the presiding administrative law judge on February 26, 1997, in the above-captioned investigation, and not to review the remainder of the initial determination.

**FOR FURTHER INFORMATION CONTACT:** Carl P. Bretscher, Esq., Office of the General Counsel, U.S. International Trade Commission, telephone (202) 205–3107.

**SUPPLEMENTARY INFORMATION:** The Commission instituted this patent-based section 337 investigation on February 20, 1996 (61 FR 7122 (Feb. 20, 1996)) based on a complaint and motion for temporary relief filed by SanDisk Corp. (''SanDisk'') of Santa Clara, California. Complainant SanDisk alleged violation of section 337 in the importation, sale for importation, and/or sale within the United States after importation of certain flash memory circuits and products containing same, by reason of infringement of claims 1, 2, 3, and 4 of U.S. Letters Patent 5,418,752 (the '' '752 patent'') and/or claims 27, 32, and 44 of U.S. Letters Patent 5,172,338 (the '' '338 patent''), both owned by complainant. The Commission's notice of investigation named Samsung Electric Co., Ltd. of Seoul, Korea and Samsung Semiconductor, Inc. of San Jose, California (collectively, ''Samsung'') as respondents.

The scope of the investigation was subsequently narrowed to cover only claims 1, 2, and 4 of the '752 patent and claim 27 of the '338 patent. The presiding administrative law judge (''ALJ'') held an evidentiary hearing on the merits, which concluded on October 4, 1996. The ALJ issued his final initial determination (''ID'') on February 26, 1997, in which he found: (1) there have been importations and sales after importation of the accused products; (2) respondents did not demonstrate by clear and convincing evidence that claims 1, 2, or 4 of the '752 patent or claim 27 of the '338 patent are invalid; (3) respondents' so-called ''original'' design products infringe claims 1, 2, and 4 of the '752 patent; (4) all of respondents' products at issue infringe claim 27 of the '338 patent; and (5) complainant satisfied the domestic industry requirements of section 337. The ALJ declined to determine whether respondents' so-called ''new'' design products infringe the '752 patent, citing in part inadequacies in the documentation produced by respondents. Based on these findings, the ALJ concluded there was a violation of section 337 of the Tariff Act of 1930, as amended (19 U.S.C. § 1337).

Having examined the record in this investigation, including the ID, the Commission has determined to review the following two issues: (1) whether the ALJ erred in finding that respondents could be held liable for contributory or induced infringement of claims 1, 2, and 4 of the '752 patent; and (2) whether the ALJ erred in declining to determine whether respondents' new design products infringe claims 1, 2, and 4 of the '752 patent. The Commission has determined not to review the remainder of the ID; thus, the Commission has found a violation of section 337, regardless of the eventual resolution of the two issues identified for review, based on the ALJ's finding that Samsung's original design products infringe the '752 patent and that all of Samsung's product at issue infringe the '338 patent. The Commission has also determined to deny a motion filed by Samsung for leave to file a reply to the responses filed by SanDisk and the Commission investigative attorneys to Samsung's petition for review. The Commission's rules do not provide for such replies, and the Commission sees no reason to make an exception here. On review, the Commission is particularly interested in receiving answers to the following questions.

### I. Regarding the ALJ's Findings on Contributory and Induced Infringement of the '752 Patent

1. Is there sufficient evidence of record to find that Samsung may be held liable as a contributory infringer of the '752 patent? In answering this question, the parties should discuss whether the evidence shows any direct infringement by one of Samsung's customers, whether Samsung knew that the products it was selling contributed to such infringement, whether Samsung's products have substantial non-infringing uses, and any other relevant issues. The parties should also clearly identify the Samsung products involved in any such contributory infringement.

2. Is there sufficient evidence of record to find that Samsung may be held liable as having induced infringement of the '752 patent? In answering this question, the parties should discuss whether the evidence shows any direct infringement by one of Samsung's customers, whether Samsung had knowledge of such infringement, whether Samsung actively induced the party to infringe the '752 patent, and any other issues relevant to this question. The parties should also clearly identify the Samsung products involved in any such induced infringement.

3. If a controller were required to practice the '752 patent, as assumed *arguendo* by the ALJ in his footnote 85 on page 109 of the ID, would this affect the ALJ's finding that SanDisk has met the domestic industry requirement with respect to the '752 patent, and if so, how?

### II. Regarding the ALJ's Decision Not To Determine Whether Samsung's New Design Products Infringe the '752 Patent

1. During this investigation, did SanDisk allege that Samsung's new design products infringe the '752 patent? If so, did SanDisk ever communicate to Samsung and/or the ALJ that it was withdrawing this allegation? In addressing this question, the parties should identify both Samsung's new and original products by their serial numbers, such as those given on page 11 of the ALJ's final ID.

2. When during this investigation did SanDisk receive documentation from Samsung regarding the new design products? When did SanDisk become aware that this documentation was (allegedly) inaccurate or inadequate for the purpose of determining whether Samsung's new design products infringe the '752 patent?

3. What actions, such as filing motions to compel production or for sanctions, did SanDisk take to require Samsung to produce more accurate or sufficient information regarding Samsung's new design products? When did SanDisk take such action? Did SanDisk ever ask the ALJ to draw inferences adverse to Samsung on the basis of Samsung's alleged unwillingness to produce accurate and complete documentation on its new design products? If SanDisk did not take any such actions, why did it not? What was Samsung's response to such actions, if any?

4. What information does SanDisk believe it needs, but has not yet received, in order to determine whether

Samsung's new design products infringe the '752 patent? Is it SanDisk's position that it *could not* have received such information prior to the hearing, or is it SanDisk's position that it *did not* receive such information from Samsung?

5. Based on the documents produced by Samsung and any other relevant materials, does the record show that SanDisk's or Samsung's experts made any determination as to whether Samsung's new design products infringe the '752 patent?

6. If a determination were to be made on the basis of the present record, would the evidence show that Samsung's new design products infringe the '752 patent? In answering this question, the parties may take note of but should not reiterate arguments made previously to the Commission regarding the construction of the claims at issue.

7. If the Commission were to conclude that SanDisk has failed to carry its burden of proving that Samsung's new design products infringe the '752 patent, what would be the preclusive effect, if any, of this finding of non-infringement both at the Commission and in a federal district court?

8. In the absence of any consent or settlement agreement between the parties, does the Commission have the authority to impose a certification requirement on the importation of Samsung's new product designs where the ALJ declined to determine whether these products infringe the '752 patent?

In connection with the final disposition of this investigation, the Commission may issue (1) an order that could result in the exclusion of the subject articles from entry into the United States, and/or (2) cease and desist orders that could result in respondents being required to cease and desist from engaging in unfair acts in the importation and sale of such articles. Accordingly, the Commission is interested in receiving written submissions that address the form of remedy, if any, that should be ordered. If a party seeks exclusion of an article from entry into the United States for purposes other than entry for consumption, the party should so indicate and provide information establishing that activities involving other types of entry either are adversely affecting it or likely to do so. For background, see the Commission Opinion, *In the Matter of Certain Devices for Connecting Computers via Telephones Lines*, Inv. No. 337-TA–360.

If the Commission contemplates some form of remedy, it must consider the effects of that remedy upon the public interest. The factors the Commission will consider include the effect that an exclusion order and/or cease and desist orders would have on (1) the public health and welfare, (2) competitive conditions in the U.S. economy, and (3) U.S. production of articles that are like or directly competitive with those that are subject to investigation, and (4) U.S. consumers. The Commission is therefore interested in receiving written submissions that address the aforementioned public interest factors in the context of this investigation.

If the Commission orders some form of remedy, the President has 60 days to approve or disapprove the Commission's action. During this period, the subject articles would be entitled to enter the United States under a bond, in an amount determined by the Commission and prescribed by the Secretary of the Treasury. The Commission is therefore interested in receiving submissions concerning the amount of the bond that should be imposed.

**Written Submissions**

The parties to the investigation are requested to file written submissions on the issues under review. The submissions should be concise and thoroughly referenced to the record in this investigation, including references to specific exhibits and testimony. Additionally, the parties to the investigation, interested government agencies, and any other interested parties are encouraged to file written submissions on the issues of remedy, the public interest, and bonding. Such submissions should address the March 5, 1997, recommended determination by the ALJ on remedy and bonding. Complainant and the Commission investigative attorneys are also requested to submit proposed remedial orders for the Commission's consideration. The written submissions and proposed remedial orders must be filed no later than close of business on April 28, 1997. Reply submissions must be filed no later than the close of business on May 5, 1997. No further submissions will be permitted unless otherwise ordered by the Commission.

Persons filing written submissions must file with the Office of the Secretary the original document and 14 true copies thereof on or before the deadlines stated above. Any person desiring to submit a document (or portion thereof) to the Commission in confidence must request confidential treatment unless the information has already been granted such treatment during the proceedings. All such requests should be directed to the Secretary of the Commission and must include a full statement of the reasons why the Commission should grant such treatment. See 19 CFR 201.6. Documents for which confidential treatment by the Commission will be treated accordingly. All nonconfidential written submissions will be available for public inspection at the Office of the Secretary.

This action is taken under the authority of section 337 of the Tariff Act of 1930, as amended (19 U.S.C. § 1337) and sections 210.45–210.51 of the Commission's Rules of Practice and Procedure (19 CFR 210.45–210.51).

Copies of the public version of the ID and all other nonconfidential documents filed in connection with this investigation are or will be available for inspection during official business hours (8:45 a.m. to 5:15 p.m.) in the Office of the Secretary, U.S. International Trade Commission, 500 E Street, S.W., Washington, D.C. 20436, telephone 202–205–2000. Hearing-impaired persons are advised that information can be obtained by contacting the Commission's TDD terminal on 202–205–1810.

By order of the Commission.

Issued: April 15, 1997.

**Donna R. Koehnke,**

*Secretary.*

[FR Doc. 97–10219 Filed 4–18–97; 8:45 am]

BILLING CODE 7020–02–P

## DEPARTMENT OF JUSTICE

### Notice of Lodging of Stipulation and Order Under the Comprehensive Environmental Response, Compensation, and Liability Act of 1980, as Amended

In accordance with Department of Justice policy, notice is hereby given that a proposed Stipulation and Order in the action entitled *In re Smith Corona Corp., et al.*, No. 95–788 (HSB) (Bankr. D. Del.), was lodged on April 8, 1997 with the United States Bankruptcy Court for the District of Delaware. The proposed Stipulation and Order resolves claims by the United States, the State of New York, Keystone Consolidated Industries, Inc., Monarch Machine & Tool Co., Niagara Mohawk Power Corp., and Overhead Door Corp., asserted pursuant to the Comprehensive Environmental Response, Compensation, and Liability Act of 1980, as amended (''CERCLA''), 42 U.S.C. 9601–9675, against the debtors in this bankruptcy proceeding, which are Smith Corona Corp., SCM Office Supplies, Inc., SCC LI Corp., Hulse Manufacturing Co., Smith Corona Overseas Holdings Inc., SCM (United Kingdom) Ltd., and SCM Inter-

American Corp. (collectively, ''Smith Corona''). These claims are for recovery of response costs incurred and/or to be incurred by the claimants with respect to the Rosen Superfund Site in the city of Cortland, Cortland County, New York.

Under the terms of the proposed Stipulation and Order, the United States will receive a combination of allowed general unsecured claim distributions and cash totalling $200,129.70, the State of New York will receive allowed general unsecured claim distributions of $3,000, and the four corporate claimants will receive, collectively, a combination of allowed general unsecured claim distributions and cash totalling $46,870.30.

The Department of Justice will receive, for a period of thirty (30) days from the date of this publication, comments relating to the proposed Stipulation and Order. Comments should be addressed to the Assistant Attorney General, Environment and Natural Resources Division, U.S. Department of Justice, Washington, D.C. 20530, and should refer to *In re Smith Corona Corp., et al.,* No. 95–788 (HSB) (Bankr. D. Del.), DOJ Ref. No. 90–11–3–1578.

The proposed Stipulation and Order may be examined at the Office of the United States Attorney, 1201 Market Street, Suite 1100, Wilmington, Delaware 19899–2046; the Region II Office of the Environmental Protection Agency, 290 Broadway, New York, New York 10007–1866; and the Consent Decree Library, 1120 G Street, N.W., 4th Floor, Washington, D.C. 20005, telephone (202) 624–0892. A copy of the proposed Stipulation and Order may be obtained in person or by mail from the Consent Decree Library. In requesting a copy, please refer to the referenced case and enclose a check in the amount of $7.50 (25 cents per page reproduction costs) made payable to Consent Decree Library.

**Joel M. Gross,**

*Chief, Environmental Enforcement Section, Environment and Natural Resources Division.*

[FR Doc. 97–10015 Filed 4–18–97; 8:45 am]

BILLING CODE 4410–15–M

## DEPARTMENT OF JUSTICE

**[OJP(NIJ)–1124]**

**RIN 1121–ZA70**

## National Institute of Justice Solicitation ''Law Enforcement Family Support: Solicitation for Demonstration and Training Programs for Reduction of Stress Among Law Enforcement Officers and Their Families''

**AGENCY:** Office of Justice Programs, National Institute of Justice, Justice.

**ACTION:** Notice of solicitation.

**SUMMARY:** Announcement of the availability of the National Institute of Justice ''Law Enforcement Family Support: Solicitation for Demonstration and Training Programs for Reduction of Stress Among Law Enforcement Officers and Their Families.''

**ADDRESSES:** Proposals should be mailed to the National Institute of Justice, 633 Indiana Avenue, NW, Washington, DC 20531.

**DATES:** The deadline for receipt of proposals is close of business on June 16, 1997.

**FOR FURTHER INFORMATION CONTACT:** For a copy of the solicitation, please call the National Criminal Justice Reference Service, 1–800–851–3420. For general information about application procedures for solicitations, please call the U.S. Department of Justice Response Center, 1–800–421–6771.

**SUPPLEMENTARY INFORMATION:**

### Authority

This action is authorized under the Omnibus Crime Control and Safe Streets Act of 1968, secs. 201–03, as amended, 42 U.S.C. 3721–23 (1994).

### Background

Title XXI of the Violent Crime Control and Law Enforcement Act of 1994 establishes a Law Enforcement Family Support Program, in recognition of the negative effects of job related stress on law enforcement personnel and their families. The program authorizes the Attorney General to support research on the effects of stress on law enforcement personnel and their families, to identify and evaluate programs providing support services to law enforcement personnel and their families, and to provide technical assistance and training for these programs.

This solicitation seeks proposals for the development, demonstration, and assessment of innovative stress reduction programs for State or local law enforcement personnel and their families; and for the development and delivery of training on how to plan, implement, and manage new programs under the enacting legislature for the Law Enforcement Family Support Program.

Interested organizations should call the National Criminal Justice Reference Service (NCJRS) at 1–800–851–3420 to obtain a copy of ''Law Enforcement Family Support: Solicitation for Demonstration and Training Programs for Reduction of Stress Among Law Enforcement Officers and Their Families'' (refer to document no. SL000202). The solicitation is available electronically via the NCJRS Bulletin Board, which can be accessed via the Internet. Telnet to ncjrsbbs.ncjrs.org, or gopher to ncjrs.org:71. For World Wide Web access, connect to the NCJRS Justice Information Center at http://www.ncjrs.org. Those without Internet access can dial the NCJRS Bulletin Board via modem: dial 301–738–8895. Set the modem at 9600 baud, 8–N–1.

**Jeremy Travis,**

*Director, National Institute of Justice.*

[FR Doc. 97–10142 Filed 4–18–97; 8:45 am]

BILLING CODE 4410–18–P

## DEPARTMENT OF JUSTICE

**[OJP(NIJ)–1126]**

**RIN 1121–ZA72**

## National Institute of Justice ''Solicitation for Research and Evaluation on Violence Against Women''

**AGENCY:** Office of Justice Programs, National Institute of Justice, Justice.

**ACTION:** Notice of solicitation.

**SUMMARY:** Announcement of the availability of the National Institute of Justice ''Solicitation for Research and Evaluation on Violence Against Women.''

**DATES:** The deadline for receipt of proposals is close of business on June 25, 1997. Postmarked applications received after this date are not acceptable.

**ADDRESSES:** Proposals should be mailed to the National Institute of Justice, 633 Indiana Avenue, NW, Washington, DC 20531.

**FOR FURTHER INFORMATION CONTACT:** For a copy of the solicitation, please call the National Criminal Justice Reference Service at 1–800–851–3420. For general information about application procedures for solicitations, please call the U.S. Department of Justice Response Center at 1–800–421–6771.

**SUPPLEMENTARY INFORMATION:** The following supplementary information is provided:

### Authority

This action is authorized under the Omnibus Crime Control and Safe Streets Act of 1968, §§ 201–03, as amended, 42 U.S.C. 3721–23 (1994).

### Background

This request for proposals announces a third year of evaluation and research support on the Violence Against Women Act (Title IV) of the Violent Crime Control and Law Enforcement Act of 1994 and on related issues. This solicitation seeks research and evaluation proposals in two specific areas: practitioner-researcher partnerships and research on priority issues. These issues include evaluations of State antistalking efforts and legislation, welfare reform and its effects on domestic violence, victim advocacy, and media campaigns.

Interested organizations should call the National Criminal Justice Reference Service (NCJRS) at 1–800–851–3420 to obtain a copy of ''Solicitation for Research and Evaluation on Violence Against Women'' (refer to document no. SL000217). The solicitation is available electronically via the NCJRS Bulletin Board, which can be accessed via the Internet. Telnet to ncjrsbbs.ncjrs.org, or gopher to ncjrs.org:71. For World Wide Web access, connect to the NCJRS Justice Information Center at http://www.ncjrs.org. Those without Internet access can dial the NCJRS Bulletin Board via modem: dial 301–738–8895. Set the modem at 9600 baud, 8–N–1.

**Jeremy Travis,**

*Director, National Institute of Justice.*

[FR Doc. 97–10141 Filed 4–18–97; 8:45 am]

BILLING CODE 4410–18–P

---

## DEPARTMENT OF JUSTICE

**[OJP(NIJ)–1123]**

**RIN 1121–ZA69**

## National Institute of Justice Solicitation for Evaluation of Arrest Policies Program Under the Violence Against Women Act

**AGENCY:** Office of Justice Programs, National Institute of Justice, Justice.

**ACTION:** Notice of solicitation.

**SUMMARY:** Announcement of the availability of the National Institute of Justice ''Solicitation for Evaluation of Arrest Policies Program Under the Violence Against Women Act.''

**ADDRESSES:** Proposals should be mailed to the National Institute of Justice, 633 Indiana Avenue, NW, Room 303, Washington, DC 20531.

**DATES:** The deadline for receipt of proposals is close of business on June 12, 1997.

**FOR FURTHER INFORMATION CONTACT:** For general information about application procedures for solicitations, please call the U.S. Department of Justice Response Center 1–800–421–6771.

**SUPPLEMENTARY INFORMATION:**

### Authority

This action is authorized under the Omnibus Crime Control and Safe Streets Act of 1968, §§ 201–03, as amended, 42 U.S.C. 3721–23 (1994).

### Background

The National Institute of Justice is soliciting proposals for the evaluation of arrest policies programs funded by the Office of Justice Programs in 1997 under the Violence Against Women Act, Title IV of the Violent Crime Control and Law Enforcement Act of 1994. This request responds to the need for research to assess the effectiveness of arrest policies in the context of a system-wide, coordinated approach to domestic violence.

Interested organizations should call the National Criminal Justice Reference Service (NCJRS) at 1–800–851–3420 to obtain a copy of ''Solicitation for Evaluation of Arrest Policies Program Under the Violence Against Women Act'' (refer to document no. SL000216). The solicitation is available electronically via the NCJRS Bulletin Board, which can be accessed via the Internet. Telnet to ncjrsbbs.ncjrs.org, or gopher to ncjrs.org:71. For World Wide Web access, connect to the NCJRS Justice Information Center at http://www.ncjrs.org. Those without Internet access can dial the NCJRS Bulletin Board via modem: dial 301–738–8895. Set the modem at 9600 baud, 8–N–1.

**Jeremy Travis,**

*Director, National Institute of Justice.*

[FR Doc. 97–10143 Filed 4–18–97; 8:45 am]

BILLING CODE 4410–18–P

---

## DEPARTMENT OF LABOR

## Employment Standards Administration

## Proposed Collection; Comment Request

**ACTION:** Notice.

**SUMMARY:** The Department of Labor, as part of its continuing effort to reduce paperwork and respondent burden, conducts a preclearance consultation program to provide the general public and Federal agencies with an opportunity to comment on proposed and/or continuing collections of information in accordance with the Paperwork Reduction Act of 1995 (PRA95) (44 U.S.C. 3506(c)(2)(A)). This program helps to ensure that requested data can be provided in the desired format, reporting burden (time and financial resources) is minimized, collection instruments are clearly understood, and the impact of collection requirements on respondents can be properly assessed. Currently, the Employment Standards Administration is soliciting comments concerning two information collections: (1) The proposed extension collection of Form WH–1, Economic Survey Schedule and (2) Form CM–908, Notice of Termination, suspension, Reduction, or Increase in Benefit Payments. Copies of the proposed information collection requests can be obtained by contacting the office listed below in the addressee section of this notice.

**DATES:** Written comments must be submitted to the office listed in the addressee section below on or before June 18, 1997. The Department of Labor is particularly interested in comments which:

- Evaluate whether the proposed collection of information is necessary for the proper performance of the functions of the agency, including whether the information will have practical utility;
- Evaluate the accuracy of the agency's estimate of the burden of the proposed collection of information, including the validity of the methodology and assumptions used;
- Enhance the quality, utility and clarity of the information to be collected; and
- Minimize the burden of the collection of information on those who are to respond, including through the use of appropriate automated, electronic, mechanical, or other technological collection techniques or other forms of information technology, e.g., permitting electronic submissions of responses.

**ADDRESSES:** Contact Mr. Rich Elman concerning Form WH–1 at the U.S. Department of Labor, 200 Constitution Ave., N.W., Room S–3201, Washington, D.C. 20210, telephone (202) 219–6375. For Form CM–908, contact Ms. Margaret Sherrill at the above address, (202) 219–7601. (These are not toll-free numbers.) The Fax number is (202) 219–6592.

**SUPPLEMENTARY INFORMATION:**

## I. Background

Sections 5, 6(a)(3) and 8 of the Fair Labor Standards Act (FLSA), 29 U.S.C. 201 et seq., provide that covered, non-exempt employees in American Samoa may be paid, in lieu of the federal statutory minimum wage specified in section 6(a), at a minimum wage rates established by a special industry committee. The committee is to recommend to the Secretary of Labor, the highest minimum wage rate (not to exceed the rate required under section 6(a)(1) of the FSLA) that it determines, having due regard to economic and competitive conditions, will not substantially curtail employment in the industry and will not give any industry in American Samoa a competitive advantage over any industry in the United States outside of American Samoa. The committee must consider competitive consideration as affected by transportation, living and production costs, the wages established by collective bargaining agreements in various industries, and wages paid by employers who voluntarily maintain minimum wage standards. Form WH–1 is a voluntary use form competed by businesses in American Samoa to disclose certain economic data concerning their particular establishment. The completed forms are collected and examined by employees of the Wage and House Division (WHD) who are sent to American Samoa to complete the survey.

## II. Current Actions

The Department of Labor (DOL) seeks extension of approval to collect this information in order to carry out its responsibility to gather information to provide the industry committee with the data necessary to recommend wage rates for the various industries in American Samoa. This information is essential to enable the Administrator, WHD to prepare the economic report, for the committee, that provides the economic data to set the wage rates.

*Type of Review:* Extension.
*Agency:* Employment Standards Administration.
*Title:* Economic Survey Schedule.
*OMB Number:* 1215–0028.
*Agency Numbers:* WH–1.
*Affected Public:* Business or other for-profit; State, Local or Tribal Government.
*Total Respondents:* 50.
*Frequency:* Biennially.
*Total Responses:* 50.
*Average Time Per Response for Reporting:* 45 minutes.
*Estimated Total Burden Hours:* 38.
*Total Burden Cost (capital/startup):* 0.
*Total Burden Cost (operating/maintenance):* 0.

## I. Background

The Federal Mine Safety and Health Act of 1977, as amended (30 U.S.C. 942) and 20 CFR 725.621 requires that Coal Mine operators or their representatives (called responsible operators (RO)), to pay Black Lung benefits to a miner or the miner's surviving family. ROs who pay benefits are required to report any change in the benefit amount to the Department of Labor (DOL). The CM–908 notifies DOL of the change in the beneficiary's benefit amount and the reason for the change.

## II. Current Actions

DOL seeks extension of approval to collect this information in order to insure the Division of Coal Mine Workers' Compensation (DCMWC) regulations are followed and that Black Lung beneficiaries receive accurate and timely benefit payments from the RMOs.

*Type of Review:* Extension.
*Agency:* Employment Standards Administration.
*Title:* Notice of Termination, Suspension, Reduction, or Increase in Benefit Payments.
*OMB Number:* 1215–0064.
*Agency Numbers:* CM–908.
*Affected Public:* Business or For Profit.
*Total Respondents:* 325.
*Frequency:* On occasion.
*Total Responses:* 9,000.
*Average Time Per Response for Reporting:* 12 minutes.
*Estimated Total Burden Hours:* 1,800.
*Total Burden Cost (capital/startup):* 0.
*Total Burden Cost (operating/maintenance):* $3,060.00.

Comments submitted in response to this notice will be summarized and/or included in the request for Office of Management and Budget approval of the information collection request; they will also become a matter of public record.

Dated: April 15, 1997.

**Margaret J. Sherrill,**

*Management Analysis Officer, Division of Financial Management, Office of Management, Administration and Planning, Employment Standards Administration.*

[FR Doc. 97–10203 Filed 4–18–97; 8:45 am]

BILLING CODE 4510–27–M

---

## NATIONAL FOUNDATION ON THE ARTS AND THE HUMANITIES

### Sunshine Act Meeting

**AGENCY:** Institute of Museum and Library Services.

**ACTION:** Notice of meeting.

**SUMMARY:** This notice sets forth the announcement of a forthcoming meeting of the National Museum Services Board and the National Commission on Libraries and Information Science.

**TIME/DATE:** 9:40 a.m.–4:00 p.m., Thursday May 8, 1997.

**STATUS:** Open.

**ADDRESSES:** The Old Post Office Building, Room M–09, 1100 Pennsylvania Avenue, NW, Washington, D.C. 20506.

**FOR FURTHER INFORMATION CONTACT:** Isa Bauerlein, Special Assistant to the Director, Institute of Museum and Library Services, 1100 Pennsylvania Avenue, N.W., Room 510, Washington, D.C. 20506—(202) 606–8536.

**SUPPLEMENTARY INFORMATION:** The meeting on Thursday, May 8 will be open to the public.

If you need special accommodations due to a disability, please contact: Institute of Museum and Library Services, 1100 Pennsylvania Avenue, N.W., Washington, D.C. 20506—(202) 606–8536—TDD (202) 606–8636 at least seven (7) days prior to the meeting date.

Dated: April 15, 1997.

**Linda Bell,**

*Director of Policy, Planning, and Budget, National Foundation on the Arts and Humanities, Institute of Museum and Library Services.*

[FR Doc. 97–10369 Filed 4–17–97; 1:19 pm]

BILLING CODE 2036–01–M

---

## NATIONAL FOUNDATION ON THE ARTS AND THE HUMANITIES

### Sunshine Act Meeting

**AGENCY:** Institute of Museum and Library Services.

**ACTION:** Notice of meeting.

**SSUMMARY:** This notice sets forth the agenda of a forthcoming meeting of the National Museum Services Board. This notice also describes the functions of the Board. Notice of this meeting is required under the Government through the Sunshine Act (Public Law 94–409) and regulations of the Institute of Museum and Library Services, 45 CFR 1180.84.

**TIME/DATE:** 10:30 a.m.–12:30 p.m.—Friday May 9, 1997.

**STATUS:** Open.

**ADDRESSES:** Mt. Vernon Salon A, The Madison Hotel, 15th and M Streets, NW., Washington, DC 20005, (202 862–1600.

**FOR FURTHER INFORMATION CONTACT:** Isa Bauerlein, Special Assistant to the

Director, Institute of Museum and Library Services, 1100 Pennsylvania Avenue, NW., Room 510, Washington, DC 20506—(202) 606–8536.

**SUPPLEMENTARY INFORMATION:** The National Museum Services Board is established under the Museum Services Act, Title II of the Arts, Humanities, and Cultural Affairs Act of 1976, Public Law 94–462. The Board has responsibility for the general policies with respect to the powers, duties, and authorities vested in the Institute under the Museum Services Act.

The meeting of Friday, May 9 will be open to the public.

If you need special accommodations due to a disability, please contact: Institute of Museum and Library Services, 1100 Pennsylvania Avenue, NW., Washington, DC 20506—(202) 606–8536—TDD (202) 606–8636 at least seven (7) days prior to the meeting date.

**69th Meeting of the National Museum Services Board, The Madison Hotel, Mt. Vernon Salon A, Friday May 9, 1997, 10:30 a.m.–12:30 p.m.**

*AGENDA*

I. Chairman's Welcome and Approval of Minutes
II. Director's Report
III. Appropriations Report
IV. Legislative/Public Affairs Report
V. Office of Museum Services, Program Reports
VI. Board Discussion of IMLS Joint Museum—Library Grants

Dated: April 15, 1997.

**Linda Bell,**

*Director of Policy, Planning and Budget, National Foundation on the Arts and the Humanities, Institute of Museum and Library Services.*

[FR Doc. 97–10370 Filed 4–17–97; 1:19 pm]

BILLING CODE 7036–01–M

## NATIONAL SCIENCE FOUNDATION

### Proposed Collection; Comment Request; Baseline Data Collection for FastLane Project

**SUMMARY:** The National Science Foundation, as part of its continuing effort to reduce paperwork and respondent burden, invites the general public and other Federal agencies to take this opportunity to comment on proposed and/or continuing information collections, as required by the Paperwork Reduction Act of 1995, Public Law 104–13 (44 U.S.C. 3506(c)(2)(A)).

**DATES:** Written comments must be submitted on or before June 20, 1997.

**ADDRESSES:** Send comments to Gail A. McHenry by email at gmchenry@nsf.gov or Reports Clearance Officer, National Science Foundation, 4201 Wilson Boulevard, Suite 245, Arlington, Virginia 22230.

**FOR FURTHER INFORMATION CONTACT:** To request more information on the proposed project that is described below or to obtain a copy of the data collection plans and instruments, call the NSF Clearance Officer on (703) 306–1125 x2010 or email at gmachenry@nsf.gov.

**SUPPLEMENTARY INFORMATION:**

**I. Abstract**

The National Science Foundation (NSF) designed this new collection effort to assemble baseline information from research institutions about the administrative burden (time and cost measurements) and workflow processes associated with the preparation, submission, and post-award administration of proposals to NSF and other federal research funding agencies. The collection effort will involve approximately 55 institutions and will be conducted as a telephone survey. In the course of the survey, both administrative and research staff will be contacted at each institution.

**II. Use of the Information**

The NSF FastLane project is a 3-year experimental program using advanced information technology to re-design and streamline the way NSF does business with the research community. The long-term goals of Fast Lane are to reduce administrative burden, lower costs, and increase access to information for the research and education communities. The purpose of this study is to collect baseline data about administrative processes that NSF expects to improve with FastLane. NSF will then be able to gauge the impact of FastLane on specific administrative processes at research institutions by comparing out-year measurements to these baselines. The results of these comparisons will help to guide future FastLane development efforts.

**III. Burden on the Public**

The Foundation estimates that a total of 363 hours will be required to complete the survey.

**IV. Request for Comments**

We invite comments on: (a) Whether the proposed collection of information is necessary for the proper performance of the functions of the Agency, including whether the information shall have practical utility; (b) the accuracy of the Agency's estimate of the burden of the proposed collection of information; (c) ways to enhance the quality, utility, and clarity of the information to be collected; and (d) ways to minimize the burden of collection of information on respondents, including through the use of automated collection techniques or other forms of information technology.

Comments submitted in response to this notice will be summarized and/or included in the request for OMB approval of this information collection; they also will become a matter of public record.

Dated: April 15, 1997.

**Gail A. McHenry,**

*Reports Clearance Officer.*

[FR Doc. 97–10157 Filed 4–18–97; 8:45 am]

BILLING CODE 2555–01–M

## NUCLEAR REGULATORY COMMISSION

**[Docket Nos. 50–498 and 50–499]**

### Order Approving Application Regarding the Formation of an Operating Company and Transfer of Operating Authority

In the Matter of: Housing Lighting and Power Company; City Public Service Board of San Antonio; Central Power and Light Company; City of Austin, Texas; (South Texas Project, Units 1 and 2).

**I**

Houston Lighting and Power Company (HL&P), City Public Service Board of San Antonio, Central Power and Light Company, and City of Austin, Texas, are the owners of the South Texas Project, Units 1 and 2 (STP). The owners hold Facility Operating Licenses Nos. NPF–76 and NPF–80 issued by the U.S. Nuclear Regulatory Commission (NRC) pursuant to Part 50 of Title 10 of the *Code of Federal Regulations* (10 CFR Part 50) on March 22, 1988, and March 28, 1989, respectively. Under these licenses, HL&P is authorized to act for the owners and has exclusive responsibility for and control over the physical construction, operation, and maintenance of STP. STP is located in Matagorda County, Texas.

**II**

By letter dated August 23, 1996, as supplemented by letters dated October 1 and 15, 1996, and January 28, 1997, HL&P requested approval of the transfer of operating authority under the licenses to a new operating company and issuance of conforming amendments. HL&P proposes to transfer operating authority under the licenses to a new operating company to allow it to use

and operate STP and to possess and use related licensed nuclear materials in accordance with the same conditions and authorizations included in the current operating licenses. HL&P has also requested the issuance of license amendments reflecting the transfer of operating authority. The new operating company would be formed by the owners to become the licensed operator for STP and would have exclusive control over the operation and maintenance of the facility. The present plant organization, the oversight organizations, and the engineering and support organizations would be transferred essentially intact from HL&P to the new operating company. The technical qualifications of the new operating company organization, therefore, would be at least equivalent to those of the existing organization.

Under the proposed arrangement, ownership of STP would remain unchanged, with each owner retaining its current ownership interest. The new operating company would not own any portion of STP. Likewise, the owners' entitlement to capacity and energy from STP would not be affected by the proposed change in operating responsibility for STP from HL&P to the new operating company. The owners would continue to provide all funds for operation, maintenance, and decommissioning by the operating company of STP. The responsibility of the owners would include funding for any emergency situations that might arise at STP.

HL&P requested the Commission's approval of the transfer of operating authority to a new operating company and issuance of conforming license amendments pursuant to 10 CFR 50.80 and 50.90. Notice of this application for approval and an opportunity for a hearing was published in the **Federal Register** on November 7, 1996 (61 FR 57719), and an Environmental Assessment and Finding of No Significant Impact was published in the **Federal Register** on November 18, 1996 (61 FR 58710).

Under 10 CFR 50.80, no license, or any right thereunder, shall be transferred, directly or indirectly, through transfer of control of the license, unless the Commission shall give its consent in writing. Upon review of the information submitted in the letters of August 23, October 1 and 15, 1996, and January 28, 1997, and other information before the Commission, the NRC staff has determined that the proposed new operating company is qualified to hold the licenses to the extent and for the purposes described above, and that the transfer of the licenses as described above is otherwise consistent with applicable provisions of law, regulations, and orders issued by the Commission. These findings are supported by a Safety Evaluation dated April 8, 1997.

**III**

Accordingly, pursuant to Sections 105, 161b, 161i, and 184 of the Atomic Energy Act of 1954, as amended, 42 U.S.C. §§ 2135, 2201(b), 2201(i), and 2234, and 10 CFR 50.80, *It is hereby ordered* that the Commission consents to the transfer of the licenses as described herein to the proposed new operating company, subject to the following conditions:

(1) The new operating company, hereafter referred to as STPNOC [STP Nuclear Operating Company], shall not market or broker power or energy from South Texas Project, Units 1 and 2. The Owners are responsible and accountable for the actions of STPNOC to the extent that said actions affect the marketing or brokering of power or energy from South Texas Project, Units 1 and 2, and, in any way, contravene the antitrust conditions in Appendix C of the licenses; and

(2) Should the formation of the new operating company and transfer of operating authority not be completed by March 31, 1998, this Order shall become null and void, provided, however, on application and for good cause shown, such date may be extended.

This Order is effective upon issuance.

Action on the proposed conforming license amendments will be taken upon implementation of the transfer approved by this Order.

For further details with respect to this Order, see the licensee's application dated August 23, 1996, as supplemented by letters dated October 1 and 15, 1996, and January 28, 1997, which are available for public inspection at the Commission's Public Document Room, the Gelman Building, 2120 L Street, N.W., Washington, DC, and at the local public document room located at the Wharton County Junior College, J. M. Hodges Learning Center, 911 Boling Highway, Wharton, TX 77488.

Dated at Rockville, Maryland, this 8th day of April 1997.

For the Nuclear Regulatory Commission.

**Samuel J. Collins,**

*Director, Office of Nuclear Reactor Regulation.*

[FR Doc. 97–10213 Filed 4–18–97; 8:45 am]

BILLING CODE 7590–01–P

## SECURITIES AND EXCHANGE COMMISSION

**[Investment Company Act Release No. 22616; 812–10290]**

## Merrill Lynch Asset Management, L.P., et al.; Notice of Application

April 14, 1997.

**AGENCY:** Securities and Exchange Commission (''SEC'').

**ACTION:** Notice of application for an Order under the Investment Company Act of 1940 (the ''Act'').

**APPLICANTS:** Merrill Lynch Asset Management, L.P. (''MLAM''), and Merrill Lynch, Pierce, Fenner & Smith Incorporated (''MLP'').

**RELEVANT ACT SECTIONS:** Order of exemption requested pursuant to (a) sections 6(c) and 17(b) of the Act for an exemption from section 17(a); (b) section 6(c) for an exemption from section 17(e) and rules 10f–3 and 17e–1; and (c) section 10(f) for an exemption from section 10(f).

**SUMMARY OF APPLICATION:** Applicants request an order to permit MLP to engage in certain principal and brokerage transactions with ''multi-manager'' investment companies that are subadvised by its affiliated person, Hotchkis & Wiley (''H&W''). The transactions would be between MLP and those portions of the investment companies that are not subadvised by H&W.

**FILING DATES:** The application was filed on August 12, 1996, and amended on November 4, 1996, February 20, 1997, and April 9, 1997. Applicants have agreed to file an amendment during the notice period, the substance of which is incorporated herein.

**HEARING OR NOTIFICATION OF HEARING:** An order granting the application will be issued unless the SEC orders a hearing. Interested persons may request a hearing by writing to the SEC's Secretary and serving applicants with a copy of the request, personally or by mail. Hearing requests should be received by the SEC by 5:30 p.m. on May 9, 1997, and should be accompanied by proof of service on applicants, in the form of an affidavit, or, for lawyers, a certificate of service. Hearing requests should state the nature of the writer's interest, the reason for the request, and the issues contested. Persons may request notification of a hearing by writing to the SEC's Secretary.

**ADDRESSES:** Secretary, SEC, 450 Fifth Street, NW., Washington, DC 20549. Applicants, 800 Scudders Mill Road, Plainsboro, New Jersey 08536.

**FOR FURTHER INFORMATION CONTACT:** Elaine M. Boggs, Senior Counsel, at (202) 942–0572, or Elizabeth G. Osterman, Assistant Director, at (202) 942–0564 (Division of Investment Management, Office of Investment Company Regulation).

**SUPPLEMENTARY INFORMATION:** The following is a summary of the application. The complete application may be obtained for a fee from the SEC's Public Reference Branch.

## Applicants' Representations

1. H&W is a California limited partnership that is registered as an investment adviser under the Investment Advisers Act of 1940. H&W is an operating division of MLAM, which in turn is owned and controlled by Merrill Lynch & Co., Inc. MLP, a Delaware corporation, is a subsidiary of Merrill Lynch & Co., Inc. and is a registered broker-dealer and a registered investment adviser.

2. H&W currently serves, and may in the future serve, as one of several investment advisers to certain separate portfolios (the ''Portfolios'') of registered investment companies that otherwise have no affiliation with applicants (the ''Unaffiliated Funds''). H&W currently serves as subadviser to certain Portfolios of the following Unaffiliated Funds: Target Portfolio Trust, Landmark Funds I, American AAdvantage Funds, American AAdvantage Mileage Funds, and the Hirtle Callaghan Trust. Each of the Portfolios is advised by a primary investment adviser (''Primary Adviser'') and/or one or more subadvisers in addition to H&W (''Unaffiliated Subadvisers''). The Primary Adviser and Unaffiliated Subadvisers are not affiliated persons of applicants or affiliated persons of such affiliated persons (''second-tier affiliates''). (The portion of each Portfolio that is subadvised by an Unaffiliated Subadviser is an ''Unaffiliated Portion.'') [1]

3. Applicants request relief only or those Portfolios where H&W manages a discrete portion of the Portfolio and there are one or more Unaffiliated Portions of the same Portfolio managed by Unaffiliated Subadvisers (such Portfolios may also be referred to as ''Multi-Managed Portfolios''). In a Multi-Managed Portfolio, each subadviser's contract assigns it responsibility to manage a discrete portion of the Portfolio. Each subadviser is responsible for making independent investment and brokerage allocation decision based on its own research and credit evaluations. H&W does not serve as subadviser to any Multi-Managed Portfolio in which the Primary Adviser dictates or influences brokerage allocation decisions. Each subadviser to a Multi-Managed Portfolio is compensated based on a percentage of the value of assets allocated to that subadviser.

4. Applicants request that relief be extended to both the Unaffiliated Portion of the Multi-Managed Portfolios of the above Unaffiliated Funds for which H&W currently services as subadviser, as well as to any other Multi-Managed Portfolio to which H&W may in the future provide investment advisory services and which is operated in a manner consistent with the terms and the conditions of the application. In addition, applicants request that relief be extended to broker-dealers that control, are controlled by, or are under common control with MLP (collectively with MLP, ''Affiliated Broker-Dealers''). A ''broker-dealer'' or ''Affiliated Broker-Dealer'' may or may not be registered as a broker-dealer under Securities Exchanged Act of 1934 and may include affiliates of MLP that are government securities dealers, municipal securities dealers, futures commission merchants, and banks.

## Applicants' Legal Analysis

*A. Relief From Section 17(a)*

1. Section 17(a) of the Act generally prohibits sales or purchases of securities between a registered investment company and any affiliated person of the company or an affiliate of such affiliated person. Section 2(a)(3) of the Act defines an affiliated person of another person to be any person directly or indirectly controlling, or under control with such person and any investment adviser of an investment company

2. H&W is an affiliated person of the Portfolios that it subadvises. It is also under common control with the Affiliated Broker-Dealers. Thus, the Affiliated Broker-Dealers would be second-tier affiliates of a Multi-Managed Portfolio managed by H&W as subadviser. As a result, any transactions sought to be effected by the Unaffiliated Subadviser with an Affiliated Broker-Dealer on behalf of a Multi-Managed Portfolio would be subject to the provisions of section 17(a). Applicants seek relief from section 17(a) to exempt principal transactions entered into in the ordinary course of business between the Unaffiliated Portions and an Affiliated Broker-Dealer. The requested exemption would apply only where an Affiliated Broker-Dealer is deemed to be an affiliated person or a second-tier affiliate of a Portfolio solely because H&W is the subadviser to discrete portion of the assets of that Portfolio.

3. Section 6(c) permits the SEC to exempt any person or transaction from any provision of the Act, if such exemption is necessary or appropriate in the pubic interest and consistent with the protection of investors and the purposes fairly intended by the policies of the Act.

4. Section 17(b) permits the SEC to grant an order permitting a transaction otherwise prohibited by section 17(a) if it finds that the terms of the proposed transaction are fair and reasonable and do not involve overreaching on the part of any person concerned. For the reasons stated below, applicants believe that the terms of the proposed transactions meet the standards of sections 6(c) and 17(b).[2]

5. Applicants submit that the primary purpose of section 17(a) is to prevent self-dealing. Applicants state that when the person acting on behalf of an investment company has no direct or indirect pecuniary interest in a party to a principal transaction, then the abuses that section 17(a) is designed to prevent are not present. Applicants state that this is the situation in each transaction for which relief is requested because neither the Primary Adviser nor the subadviser to the Unaffiliated Portion are affiliates of H&W or its affiliated persons.

6. Applicants state that each subadviser's contract assigns it responsibility to manage a discrete portion of the Multi-Managed Portfolio. The contracts neither require nor authorize collaboration between or among subadvisers. Each subadviser is responsible for making independent investment and brokerage allocation decisions based on its own research and credit evaluations. Applicants state that H&W does not serve as subadviser to any Portfolio where the Primary Adviser dictates or influences brokerage

[1] The terms ''Unaffiliated Subadviser'' and ''Unaffiliated Portion'' include the Primary Adviser and the portion of a Portfolio directly advised by such Primary Adviser, respectively, provided that the Primary Adviser manages its portion of the Portfolio independently of the portions managed by the subadvisers, including H&W, and the Primary Adviser does not control or influence H&W or H&W's investment decisions for its portion of such Portfolio. In addition, such terms include the co-investment manager and the portion of a Portfolio managed by such co-investment manager, respectively, where the relationship of H&W and such co-investment manager is directly with the Portfolio and there is no Primary Adviser, provided that H&W and any such co-investment manager manage their respective portions of the Portfolio independently.

[2] Section 17(b) could be interpreted to exempt only a single transaction. However, the Commission, under section 6(c) of the Act, may exempt a series of transactions that otherwise would be prohibited by section 17(a).

allocation or investment decisions, or has the contractual right to do so. Applicants submit that in managing a discrete portion of a Portfolio, each subadviser acts for all practical purposes as though it is managing a separate investment company. Further, applicants state that, for each transaction for which relief is requested, the Unaffiliated Subadviser would be dealing with an Affiliated Broker-Dealer that is a competitor of that subadviser. Applicants believe therefore, that each such transaction would be the product of arm's length bargaining.

7. In addition, applicants state that the method of compensating subadvisers in the context of a multiple subadviser Portfolio furthers the element of competition among them. Applicants state that subadvisers are paid on the basis of a percentage of the value of the assets allocated to their management. Applicants argue that the execution of a transaction to the disadvantage of the Unaffiliated Portion of the Portfolio would disadvantage the Unaffiliated Subadviser to the extent that it diminishes the value of the Unaffiliated Portion of the Portfolio, with no countervailing benefit to the Unaffiliated Subadviser. Applicants further submit that the Primary Adviser's power to dismiss subadvisers or to change the portion of a Portfolio allocated to each reinforces a subadviser's incentive to maximize the investment performance of its own portion of the Portfolio.

*B. Relief From Section 17(e) and Rule 17e–1*

1. Section 17(e)(2)(A) of the Act prohibits an affiliate or a second-tier affiliate of an investment company from acting as broker in connection with the sale of securities to or by the investment company, to receive a commission, fee or other remuneration for effecting such transaction which exceeds the usual and customary broker's commission if the sale is effected on a securities exchange.

2. Rule 17e–1 sets forth the conditions under which an affiliated person or a second-tier affiliate of an investment company may receive a commission, fee, or other remuneration which would not exceed the ''usual and customary broker's commission'' for purposes of section 17(e)(2)(A). Paragraph (b) of rule 17e–1 requires the investment company's board of directors, including a majority of the disinterested directors, to adopt certain procedures and to determine at least quarterly that all transactions effected in reliance on rule 17e–1 in the preceding quarter were effected in compliance with the company's rule 17e–1 procedures. Rule 17e–1(c) specifies the records that must be maintained by each investment company with respect to any transactions effected pursuant to rule 17e–1.

3. Applicants request relief under section 6(c) to the extent necessary to permit the Unaffiliated Portion of each Portfolio to pay commissions, fees, or other remuneration to an Affiliated Broker-Dealer, acting as broker in the ordinary course of business, in connection with the sale of securities to or by such Unaffiliated Portion of a Portfolio, without complying with the requirements of rule 17e–1 (b) and (c) under the Act. In addition, applicants request that such relief extend to transactions in futures contracts and related options as well as securities. For the reasons stated below, applicants believe that the request for relief meets the standards of section 6(c).

4. Applicants state that the transactions for which relief is requested will involve no conflict of interest and that there is no possibility of self-dealing. Applicants submit that the pecuniary interests of the particular Unaffiliated Subadviser are directly aligned with those of the Unaffiliated Portion of the Portfolio and that, therefore, the brokerage commissions, fees, or other remuneration to be paid by the Unaffiliated Portion will be reasonable and fair.

5. Applicants argue that the procedures imposed by rule 17e–1 (b) and (c) will be unduly burdensome to the Unaffiliated Funds and the Unaffiliated Subadvisers. Applicants state that H&W and MLP's lack of control over the Unaffiliated Funds makes such procedures unnecessary for the protection of shareholders, since the absence of a control relationship will ensure that all brokerage transactions will be executed on an arm's length basis. Moreover, applicants submit that even if the unaffiliated Funds had procedures relating to the selection of an Affiliated Broker-Dealer as broker by the Unaffiliated Subadvisers, compliance with such procedures would be entirely within the control of such Unaffiliated Subadvisers and not within the control of H&W or MLP.

6. In addition, applicants state that it is not uncommon for an Unaffiliated Subadviser to place orders for trades for the respective Unaffiliated Portions of the Portfolio at the same time and with the same broker-dealer as trades for other clients. Applicants submit that since H&W, MLP, and their affiliates are not affiliated with such Unaffiliated Subadvisers or the Unaffiliated Fund (other than by virtue of H&W's subadvisory relationship with the Portfolio), the requirement that such transactions be monitored under rule 17e–1 greatly complicates the compliance process for such Unaffiliated Subadviser and the Unaffiliated Funds.

7. Applicants state that each Unaffiliated Subadviser that selects an Affiliated Broker-Dealer as broker will do so in accordance with the brokerage allocation practices set forth in the prospectus and statement of additional information for the respective Unaffiliated Fund (*i.e.*, subject to best price and execution). In addition, applicants state that each Unaffiliated Subadviser selecting broker-dealers for its Unaffiliated Portion of a Portfolio has an inherent interest in obtaining best price and execution, so as to maximize the Unaffiliated Portion of the Portfolio's potential return. Conversely, applicants submit that such Unaffiliated Subadvisers have no interest in benefiting H&W or its affiliates at the expense of the Unaffiliated Portions of the Portfolios they manage.

*C. Relief from Section 10(f) and Rule 10f–3*

1. Section 10(f), in relevant part, prohibits a registered investment company from knowingly purchasing or otherwise acquiring during the existence of any underwriting or selling syndicate, any security (except a security of which the company is the issuer) a principal underwriter of which is an officer, director, member of an advisory board, investment adviser, or employee of the company, or an affiliated person of any of the foregoing. Section 10(f) also provides that the SEC may exempt by order any transaction or classes of transactions from any of the provisions of section 10(f), if and to the extent that such exemption is consistent with the protection of investors.

2. Applicants acknowledge that each subadviser to a Multi-Managed Portfolio which has multiple subadvisers, although under contract to manage only a distinct portion of the Portfolio, is an investment adviser to the Portfolio itself, not just the portion of the Portfolio it manages. As such, all purchases of securities by such subadviser on behalf of the Portfolio from an underwriting syndicate a principal underwriter of which is an affiliated person of any of the Portfolio's other subadvisers, fall within the prohibitions section 10(f).

3. Applicants request relief pursuant to section 10(f) exempting from the provisions of section 10(f) any purchase of securities by an Unaffiliated Portion of a Multi-Managed Portfolio in the ordinary course of business during the

existence of an underwriting or selling syndicate, a principal underwriter of which is an Affiliated Broker-Dealer.

4. Applicants believe that the requested relief meets the standards set forth in section 10(f). Applicants state that section 10(f) was designed to prevent the practice of ''dumping'' otherwise unmarketable securities on investment companies, either by forcing the investment company to purchase unmarketable securities from the underwriting affiliate itself, or by forcing or encouraging the investment company to purchase such securities from another member of the syndicate. Applicants submit that such abuses are not present in the context of Multi-Managed Portfolios to any greater extent than is the case with a series investment company with unaffiliated subadvisers to separate portfolios. As stated above in the context of sections 17 (a) and (e) transactions, in each underwriting transaction that would be subject to the requested relief, the Unaffiliated Subadviser would be dealing, on behalf of the Unaffiliated Portion of the Portfolio, with an Affiliated Broker-Dealer that is a competitor of the Unaffiliated Subadviser in an arm's length arrangement.

5. Rule 10f–3 exempts certain transactions from the prohibitions of section 10(f) if specified conditions are met. Paragraph (d) of rule 10f–3 provides that the amount of securities of any class of an issue to be purchased by the investment company, or by two or more investment companies having the same investment adviser, shall not exceed 4% of the principal amount of the offering of such class or $500,000 in principal amount, whichever is greater, but in no event greater than 10% of the principal amount of the offering.

6. Applicants also request exemptive relief pursuant to section 6(c) to the extent necessary so that where a portion of a Portfolio managed by H&W purchases securities in reliance upon rule 10f–3, for purposes of determining H&W's compliance with the percentage limits of rule 10f–3(d), such purchases will not be aggregated with any purchases that might be made by an Unaffiliated Portion of the Portfolio. For the reasons below, applicants believe the requested relief meets the standards of section 6(c).

7. Applicants believe that the restrictions of rule 10f–3 would erect an unnecessary barrier to their purchase of securities in underwritings where there is no conflict of interest present. Applicants state that in order to comply with the restrictions of rule 10f–3(d), it would be necessary for all of the subadvisers to coordinate their securities purchases in underwriting to ensure compliance, which would require communication among them regarding their investment plans. Applicants state that such communication would otherwise be unnecessary. In addition, applicants submit that it would be contrary to the interests of shareholders to maintain unnecessary barriers to purchases by the Portfolio of securities that conform to its investment objective and policies where there is no reason to fear ''dumping'' or other self-dealing. Applicants state that H&W would comply with rule 10f–3 with respect to transactions on behalf of the portion of any Multi-Managed Portfolio it subadvises.

**Applicants' Conditions**

Applicants agree that any other of the SEC granting the requested relief will be subject to the following conditions:

1. Each Portfolio will be advised by H&W and at least one other Unaffiliated Subadviser and will be operated consistent with the manner descried in section I.C. of the application.

2. Neither H&W (except by virtue of H&W serving as subadviser to a discrete portion of a Portfolio of an Unaffiliated Fund) nor the Affiliated Broker-Dealer will be an affiliated person or a second-tier affiliate of any Unaffiliated Subadviser or any officer, director, or employee of the Unaffiliated Fund engaging in the transaction.

3. H&W will not directly or indirectly consult with any Unaffiliated Subadvisers concerning allocation of principal or brokerage transactions.

4. H&W will not participate in any arrangement whereby the amount of its subadvisory fees will be affected by the investment performance of an Unaffiliated Subadviser.

For the Commission, by the Division of Investment Management, pursuant to delegated authority.

**Margaret H. McFarland,**

*Deputy Secretary.*

[FR Doc. 97–10159 Filed 4–18–97; 8:45 am]

BILLING CODE 8010–01–M

---

## SECURITIES AND EXCHANGE COMMISSION

### Issuer Delisting; Notice of Application To Withdraw From Listing and Registration; (Safeway Inc., Common Stock, $.01 Par Value) File No. 1–41

April 15, 1997.

Safeway Inc. (''Company'') has filed an application with the Securities and Exchange Commission (''Commission''), pursuant to Section 12(d) of the Securities Exchange Act of 1934 (''Act'') and Rule 12d2–2(d) promulgated thereunder, to withdraw the above specified security (''Security'') from listing and registration on the Pacific Exchange (''PCX'').

The reasons cited in the application for withdrawing the Security from listing and registration include the following:

The Company's Security has been listed on the New York Stock Exchange, Inc. (''NYSE'') since the Company's initial public offering in 1990. The Company chose not to list on the Exchange at that time because of the incremental listing fees involved. In 1994, the Company was approached by the Exchange with an offer to list on the Exchange at no charge. The Company agreed to list on the Exchange at that time on the belief that some incremental value to the Company would be achieved by the additional listing. Since the listing on the Exchange, however, the Company has not perceived any discernible value added by the additional listing. The Company has determined that the annual maintenance fee for the additional listing on the Exchange is not a justified expense, and therefore has decided to delist. The Company's Security will continue to list on the NYSE.

Any interested person may, on or before May 6, 1997, submit by letter to the Secretary of the Securities and Exchange Commission, 450 Fifth Street, N.W., Washington, D.C. 20549, facts bearing upon whether the application has been made in accordance with the rules of the Exchange and what terms, if any, should be imposed by the Commission for the protection of investors. The Commission, based on the information submitted to it, will issue an order granting the application after the date mentioned above, unless the Commission determines to order a hearing on the matter.

For the Commission, by the Division of Market Regulation, pursuant to delegated authority.

**Jonathan G. Katz,**

*Secretary.*

[FR Doc. 97–10158 Filed 4–18–97; 8:45 am]

BILLING CODE 8010–01–M

## SECURITIES AND EXCHANGE COMMISSION

**[Release No. 34–38502; File No. SR–CBOE–97–18]**

## Self-Regulatory Organizations; Notice of Filing of Proposed Rule Change by the Chicago Board Options Exchange, Incorporated Relating to Changes to its Margin Rules

April 14, 1997.

Pursuant to Section 19(b)(1) of the Securities Exchange Act of 1934 (''Act''),[1] and Rule 19b–4 thereunder,[2] notice is hereby given that on March 21, 1997, the Chicago Board Options Exchange, Incorporated (''CBOE'' or the ''Exchange'') filed with the Securities and Exchange Commission (''SEC'' or ''Commission'') the proposed rule change as described in Items I, II and III below, which Items have been prepared by the CBOE. The Commission is publishing this notice to solicit comments on the proposed rule change from interested persons.

### I. Self-Regulatory Organization's Statement of the Terms of Substance of the Proposed Rule Change

The CBOE proposes to make revisions to its rules governing margin that will: (i) Permit a market-maker to receive market-maker margin treatment on transactions in options and other securities and (ii) allow certain defined strategies involving options to be carried in a cash account. The text of the proposed rule change is available at the Office of the Secretary, CBOE and at the Commission.

### II. Self-Regulatory Organization's Statement of the Purpose of, and Statutory Basis for, the Proposed Rule Change

In its filing with the Commission, the CBOE included statements concerning the purpose of and basis for the proposed rule change and discussed any comments it received on the proposed rule change. The text of these statements may be examined at the places specified in Item IV below. The CBOE has prepared summaries, set forth in sections A, B, and C below, of the most significant aspects of such statements.

*A. Self-Regulatory Organization's Statement of the Purpose of, and Statutory Basis for, Proposed Rule Change*

The purpose of the proposed rule change is to make revisions to the Exchange's rules governing margin that will: (i) Permit a market-maker to receive market-maker margin treatment on transactions in options and other securities,[3] and (ii) allow certain defined strategies involving options to be carried in a cash account. The Exchange is also submitting concurrently separate changes to its margin rules in a separate rule filing. That other filing proposes to make significant changes to the CBOE's margin rules in order to: (i) Establish CBOE rules to govern areas of margin regulation that will no longer be addressed by Regulation T (''Regulation T'') of the Board of Governors of the Federal Reserve System (''Federal Reserve Board'' or ''Board''), and (ii) conform certain CBOE margin provisions to those of the New York Stock Exchange. That other filing will be referred to herein as the ''First Margin Filing.'' *See* SR–CBOE–97–17. The present filing will be referred to as the ''Second Margin Filing.''

CBOE Rule 24.11A currently permits a debit put spread to be carried in a cash account.[4] The Exchange is proposing to allow also (as more fully described below) credit put spreads and both debit and credit call spreads in European, cash settled options to be carried in a cash account because such strategies are substantially similar to the presently permitted debit put spread and fully meet the criteria established by Regulation T. The Federal Reserve Board decided to defer to the options exchanges' determination of the allowable specific options related strategies to be effected in the cash account, provided that the risk of the strategy is defined and the account contains the securities and/or cash required to fully cover the exposure.[5] The proposed provision would permit a customer to hold short European-style options offset by long European-style options on the same underlying component or index in a cash account. In order to qualify for the cash account, the long position would have to be held in the account, or be purchased for the account on the same day as the short position is established. In addition, the option premium would have to be held in the account until full cash payment for the long option is received; the long option must expire with the short option, and the account must hold cash or cash equivalents of not less than any amount by which the aggregate exercise price of a long call (short put) exceeds the aggregate exercise price of a short call (long put). In the near future, the CBOE intends to propose inclusion in the cash account of other strategies meeting the criteria established by the Federal Reserve Board.

The Exchange is proposing to add these new provisions to Rule 12.3. Although most of the provisions governing the margin of index options are contained in Rule 24.11, the Exchange intends ultimately to move most of the margin provisions to Chapter 12 of its rules and so is proposing to add the index option cash account provision to Rule 12.3.

Market Maker and Specialist Accounts

The CBOE rules and the rules of the other regulatory bodies have always distinguished the margin treatment for market-makers and specialists from that applicable to customers and other broker-dealers because of the unique position of market-makers and specialists in maintaining liquid markets. The rules recognize that options market-makers and specialists must engage in various hedging transactions to manage the risk involved in fulfilling their role. Specific provisions governing permitted offset treatment for market-makers and specialists are being deleted from Regulation T, which as a result will defer to the rules of the self-regulatory-organizations (''SROs'').

The First Margin Filing proposes to allow various permitted offset positions, which may be cleared and carried by a member on behalf of one or more registered specialists, registered market-makers, or Designated Primary Market-Makers (hereinafter referred to generically as ''market-makers''), to be carried upon a margin basis satisfactory to the concerned parties. A permitted offset position is defined to mean, in the case of an option in which a market-maker makes a market, a position in the underlying instrument or other related instrument, and in the case of other securities in which a market-maker makes a market, a position in options overlying the securities in which a market-maker makes a market, if the account holds the following positions: (i) A long position in the underlying instrument offset by a short position which is ''in- or at-the-money;'' (ii) a short position in the underlying instrument offset by a long option position which is ''in- or at-the-money;'' (iii) a stock position resulting from the assignment of a market-maker short

[1] 15 U.S.C. 78s(b)(1).

[2] 17 CFR 240.19b–4.

[3] Market-maker margin treatment provides that the member carrying a market-maker's account (''Clearing Firm'') may extend credit to a market-maker on specified market-maker and permitted offset transactions on a basis that is mutually satisfactory.

[4] The Commission notes that CBOE Rule 24.11A relates to debit put spreads in cash account transactions, and not Rule 24.11 as inadvertently referred to in the rule filing.

[5] *See* 61 FR 20386 (May 6, 1996).

option position; (iv) a stock position resulting from the exercise of a market-maker long position; (v) a net long position in a security (other than an option) in which a market-maker; or (vii) an offset position as defined in Appendix A of SEC Rule 15c3–1.

In addition to the changes described above which were proposed in the First Margin Filing, the Exchange is also proposing to permit a market-maker to receive market-maker margin treatment on transactions in options or other derivative securities effected on an exchange of which he is not a member and on which he is not registered as a market-maker if the options or other derivative securities are dually listed on the exchange on which he is a registered market-maker, or if the transactions are recognized offsets as defined by Rule 15c3–1.

These transactions may be maintained by a carrying broker-dealer on a margin basis mutually satisfactory to the concerned parties, provided that the member, in the same calendar quarter, executes 80% of his total volume in the options class, product group or other SEC recognized offset group on the exchange where he is registered as a market-maker, and provided that such transactions are effected for the purpose of hedging, reducing the risk of, rebalancing, liquidating open positions of the market-maker, or for the purpose of effecting transactions pursuant to the ''trade or fade'' rules of any options exchange.[6] This requirement will ensure that transactions effected by order in markets where the member is not registered as a market-maker are in fact reasonably related to his or her market-making function and are not effected for the purpose of speculation on a margin basis which is applicable only to market-makers and specialists.

A change is also being made to allow facsimile notice of a deficit condition in an account. This change is consistent with the Commission's Rule 15c3–1.

Interpretation to Rule 12.3

Interpretation .04 addresses the manner in which the carrying firm may comply with its responsibility to extend credit properly to market-maker permitted offset transactions effected on an exchange where the market-maker is not registered. If a market-maker fails to specify to which account such an order should be placed and the resulting transaction clears in a market-maker account, and not a customer account, it will be presumed that the market-maker elected market-maker margin treatment for the position effected on an exchange of which he is not a member. The clearing firm may rely on this in good faith unless the clearing firm knows, or has reason to know, that the market-maker is not or will not be in compliance with the requirement to effect 80% of his transactions in a particular class or product offset group on the exchange where he is registered as a market-maker. Clearing firms are, however, responsible for implementing adequate procedures to ensure that such orders are recorded accurately and cleared into the appropriate accounts.

2. Statutory Basis

The basis under the Act for this proposed rule change is the requirement under Section 6(b)(5) that an exchange have rules that are designed to prevent fraudulent and manipulative acts and practices, to promote just and equitable principles of trade, to foster cooperation and coordination with persons engaged in regulating, clearing, settling, processing information with respect to, and facilitating transactions in securities, to remove impediments to protect and perfect the mechanism of a free and open market and a national market system, and in general, to protect investors and the public interest.

The proposed rule change: (1) Permits a market-maker to receive market-maker margin treatment on transactions in options and other securities and (ii) allows certain defined strategies involving options to be carried in a cash account. The Exchange believes that the proposed rule change is consistent with, and furthers, the objectives of Section 6(b) (5) of the Act, in that it is designed to perfect the mechanisms of a free and open market and to protect investors and the public interest.

*B. Self-Regulatory Organization's Statement on Burden on Competition*

The CBOE does not believe that the proposed rule change will impose any burden on competition.

*C. Self-Regulatory Organization's Statement on Comments on the Proposed Rule Change Received From Members, Participants or Others*

No written comments were solicited or received with respect to the proposed rule change.

## III. Date of Effectiveness of the Proposed Rule Change and Timing for Commission Action

Within 35 days of the date of publication of this notice in the **Federal Register** or within such longer period: (i) As the Commission may designate up to 90 days of such date if it finds such longer period to be appropriate and publishes its reasons for so finding or (ii) as to which the self-regulatory organization consents, the Commission will:

(A) by order approve such proposed rule change, or

(B) institute proceedings to determine whether the proposed rule change should be disapproved.

## IV. Solicitation of Comments

Interested persons are invited to submit written data, views and arguments concerning the foregoing. Persons making written submissions should file six copies thereof with the Secretary, Securities and Exchange Commission, 450 Fifth Street, N.W., Washington, D.C. 20549. Copies of the submission, all subsequent amendments, all written statements with respect to the proposed rule change that are filed with the Commission, and all written communications relating to the proposed rule change between the Commission and any person, other than those that may be withheld from the public in accordance with the provisions of 5 U.S.C. 552, will be available for inspection and copying in the Commission's Public Reference Room. Copies of all such filing will also be available for inspection and copying at the principal office of CBOE. All submissions should refer to file number SR–CB0E–97–18 and should be committed by May 12, 1997.

For the Commission, by the Division of Market Regulation, pursuant to delegated authority.[7]

**Margaret H. McFarland,**

*Deputy Secretary.*

[FR Doc. 97–10160 Filed 4–18–97; 8:45 am]

BILLING CODE 8010–01–M

[6] CBOE Rule 8.51(b) sets forth the trade or fade requirements applicable to CBOE market-makers.

[7] 17 CFR 200.30–3(a)(12).

---

## SECURITIES AND EXCHANGE COMMISSION

**[Release No. 34–38501; File No. SR–CBOE–97–17]**

## Self-Regulatory Organizations; Notice of Filing of Proposed Rule Change by the Chicago Board Options Exchange, Incorporated Relating to Changes to Its Margin Rules

April 14, 1997.

Pursuant to Section 19(b)(1) of the Securities Exchange Act of 1934 (''Act''),[1] and Rule 19b–4 thereunder,[2] notice is hereby given that on March 21,

[1] 15 U.S.C. 78s(b)(1).

[2] 17 CFR 240.19b–4).

1997, the Chicago Board Options Exchange, Incorporated (''CBOE'' or the ''Exchange'') filed with the Securities and Exchange Commission (''SEC'' or ''Commission'') the proposed rule change as described in Items I, II and III below, which Items have been prepared by the CBOE. The Commission is publishing this notice to solicit comments on the proposed rule change from interested persons.

**I. Self-Regulatory Organization's Statement of the Terms of Substance of the Proposed Rule Change**

The CBOE proposes to make revisions to its rules governing margin that will: (i) Establish CBOE rules to govern areas of margin regulation that will no longer be addressed by Regulation T (''Regulation T'') of the Board of Governors of the Federal Reserve System (''Federal Reserve Board'' or ''Board''), (ii) conform certain CBOE margin rules to those of the New York Stock Exchange (''NYSE''), and (iii) correct or clarify current provisions of the CBOE margin rules. The text of the proposed rule change is available at the Office of the Secretary, CBOE and at the Commission.

**II. Self-Regulatory Organization's Statement of the Purpose of, and Statutory Basis for, the Proposed Rule Change**

In its filing with the Commission, the CBOE included statements concerning the purpose of and basis for the proposed rule change and discussed any comments it received on the proposed rule change. The text of these statements may be examined at the places specified in Item IV below. The CBOE has prepared summaries, set forth in sections A, B, and C below, of the most significant aspects of such statements.

*A. Self-Regulatory Organization's Statement of the Purpose of, and Statutory Basis for, Proposed Rule Change*

1. Purpose

The Exchange is proposing changes to its margin rules at this time because of recent amendments to the Federal Reserve Board's Regulation T, the regulation that covers extensions of credit by and to brokers and dealers.[3] Among other things, the amendments to Regulation T will modify or delete certain Board rules regarding options transactions in favor of rules that must be adopted by the options exchanges and approved by the Commission. The new options provisions in Regulation T will not become effective until June 1, 1997. In the course of amending its rules to accommodate the changes necessary because of the Regulation T amendments, the Exchange has found it necessary for the sake of clarity to propose changes to the margin rules that would conform certain CBOE rules to the rules of the NYSE and to make clarifying changes to its existing provisions. The Exchange is also submitting concurrently separate changes to its margin rules in another rule filing, *See* SR–CBOE–97–18. That second filing will be referred to herein as the ''Second Margin Filing.'' This present filing will be referred to as the ''First Margin Filing.''

Definition Section

The Exchange is proposing the addition of a definition section in new paragraph (a) of Rule 12.3. The first definition that is being added is a definition of the term ''current market value,'' which is used throughout the Rule. The proposed definition is consistent with the NYSE rules[4] and the current definition of the term contained in CBOE Rule 24.11, which governs margin for index options. However, the Exchange is also proposing to add an interpretation to Rule 12.3 covering situations where there is no closing price or where trading was halted and not reopened before the normal end of the trading day or where the closing price was outside the last bid and offer that was established after the closing price. In such situations, a member organization may use a reasonable estimate of the market value of the security based upon the then current bids and offers in determining the ''current market value'' of a security, including an option. The Exchange believes that this interpretation will allow member organizations to arrive at a more reasonable estimate of the current market value in general, and particularly where the underlying securities may be trading or quoted in other markets or in cases where the underlying security re-opens for trading and the options remain closed.

The term ''escrow agreement'' is also defined in new paragraph (a) of Rule 12.3. The proposed definition is nearly identical to the definition in Regulation T except that the CBOE definition is more restrictive as to the entities that may issue approved escrow receipts. The CBOE definition requires the issuer to be a U.S. bank or trust company supervised and examined by state or federal authority. The Regulation T definition allows the issuer to be a bank or any person designated as a control location under paragraph (c) of Rule 15c3–3 under the Act. The CBOE is concerned that certain control locations, such as transfer agents, are not appropriate issuers of escrow receipts and that Exchange rules should continue to limit issuers of receipts to entities such as banks, as currently set forth in Rule 24.11(d). The Exchange will, however, continue to study this issue.

Finally, the Exchange is revising its definition of ''exempted security'' by adopting the Regulation T definition.[5]

Customer Margin Accounts

The Exchange is also proposing to reorganize Rule 12.3 so that all provisions concerning customer margin accounts are in the same sections of the Rule. Currently, customer margin provisions appear throughout the Rule. Paragraph (b) will set forth the default margin requirements on long and short positions in customer margin accounts. Paragraph (c) will set forth the specific margin treatment for particular types of securities and positions held in customer margin accounts.

The margin treatment of ''exempted securities'' is proposed to be moved from current paragraph (b)(3) of the Rule to new paragraph (c)(3), and amended so that it is consistent with the NYSE's margin rule, Rule 431.[6] Specifically, the treatment for exempted securities is being revised so that obligations of the United States (as specified in the rule) will be subject to a margin requirement of from 1% to 6%, depending on the years to maturity for the obligation. Zero coupon bonds will be subject to a margin requirement of 3% for bonds with five years or more to maturity. All other exempted securities will be subject to an initial and maintenance margin requirement of 15% of the current market value or 7% of the principal amount, whichever amount is greater. Currently, the rule requires margin of 5% on obligations of the United States and margin of 15% of the principal amount or 25% of the current market value of other exempted securities, whichever amount is lower.

The Exchange is also adopting a margin treatment for nonconvertible debt securities which is consistent with the margin treatment in NYSE Rule 431,[7] except that the Exchange is not adopting the special exemptions relating to mortgage related securities at this time because this provision is currently

[3] *See* 61 FR 20386 (May 6, 1996).

[4] *See* NYSE Rule 431(a)(1).

[5] The Commission notes that the text of the CBOE's rule filing refers to the definition contained in Section 3(a)(12) of the Act rather than the definition contained in Regulation T.

[6] *See* NYSE Rule 431(e).

[7] *Id.*

the subject of discussion by an industry committee and may be changed. The rule will require margin to be maintained equal to 20% of the current market value or 7% of the principal amount of the non-convertible debt, whichever amount is greater.

The next section, labeled ''Security Offsets,'' combines two current provisions from Rule 12.3 that deal with the margin treatment of short securities offset against: (i) Long positions in a security exchangeable or convertible into the security held in a short position and (ii) long positions in the same security as the short position. The convertible or exchangeable provision is the same as in the current rule (12.3(b)(1)(A)) except that an incorrect parenthetical referring to options is being deleted because options cannot be and never have been considered convertible securities. The Exchange notes that the rules of the other self-regulatory-organizations (''SROs'') and Regulation T do not refer to options as convertible securities. The provision dealing with offsets between long and short positions in the same security is being moved from 12.3(b)(2)(D) of the current Rule, and the margin requirement is being revised from 10% to 5% of the current market value of the ''long'' securities to conform the CBOE rule to a similar provision in NYSE Rule 431.[8]

The next provision under new paragraph (c) of Rule 12.3, which deals with exceptions to the default margin treatment for positions in a customer margin account, is the treatment for a short equity call option position offset by a warrant to purchase the underlying security. The proposed treatment is new to Rule 12.3 and is consistent with a provision of Regulation T.[9] The provision requires no margin for this position if the warrant to purchase the underlying security does not expire on or before the expiration date of the short call, and if the amount (if any) by which the exercise price of the warrant exceeds the exercise price of the short call is deposited in the account.

The next provision, which requires margin to be deposited and maintained equal to 100% of the current market value of long positions in listed equity options, is consistent with current Rule 12.5 and Regulation T and is being added to Rule 12.3 for the sake of clarity.

The provision detailing the margin requirements for short listed equity options is the same as that found in paragraph (a)(5) of the current Rule 12.3 with three exceptions. First, the provision has been moved. Second, the treatment of over-the-counter (''OTC'') options has been deleted from the provision because the Exchange is adopting the more extensive OTC margin provisions of the NYSE. Third, the Exchange is proposing the addition of a provision that would cap the margin on short puts that are out-of-the-money at a percentage of the exercise price of the short put. The reason for this cap is that, under the general rule, margin is required equal to the options market value plus 10% of the current market value of equivalent units of the underlying security for an option dealt in on the exchange. However, as the market value of the underlying security increases above the strike price, at some point the put becomes farther out-of-the-money and the risk of the position decreases. Without the cap, the margin requirement would also continue to increase at the same time that the risk of the position is decreasing.

The Exchange is also clarifying the margin treatment of interest rate put options under Rule 23.23[10] and the margin treatment of put warrants under Rule 30.53. The treatment is the same as that for short uncovered put options as described above.

The provisions governing margin treatment for various related securities positions involving listed options carried in a customer margin account have been revised and rearranged. This became necessary after various changes that were made over time rendered the provisions difficult to follow. The Exchange believes that the changes being proposed will simplify the provisions and make them easier for members to follow.[11] The treatment for a covered call writing position where the underlying security is a convertible security is similar to that currently describe in 12.3(b)(1)(C) but has been revised to be consistent with Rule 431.[12] The treatment for covered puts is similar to the treatment under current Rule 12.3; however, the language has been revised to conform the CBOE rule to the language in Regulation T. The language regarding covered calls has been reworded from what currently appears in paragraph (b)(1)(C)(1).

In the case of both short calls and short puts, the amount of margin is reduced when a short option contract is hedged with a long option contract of the same type. The treatment of short option contracts offset by long option contracts where the long option expires with or after the short option is the same as that required currently under Rule 24.11 for index options. In the case where the long call option (or short put option) strike price is less than or equal to the exercise price of the offsetting short call option (or long put option), no margin is required; however, the long position must be paid for in full. When the exercise price of the long call option (or short put option) is greater than the exercise price of the offsetting short call option (or long put option) the amount of margin required is the lesser of: (1) The margin required under the general short listed equity option rule or (2) the difference in aggregate exercise prices.

The treatment for a straddle (a short call option and a short put option the same underlying interest) requires margin on the put or call, whichever amount is greater, plus the current market value of the other option. The margin treatment for straddles is merely being moved from current paragraph (a)(5) of Rule 12.3.

The rules governing the margin requirements for OTC options have been adopted from NYSE Rule 431[13] except that the Exchange has made a slight change to cap the minimum margin on OTC short puts. A chart submitted with the filing sets forth the initial and/or maintenance margin required for options on various types of underlying securities. The amount of margin required is the percentage of the current market value of the underlying component times the multiplier, if any, (set forth in the chart) plus any ''in-the-money-amount.'' The amount of the margin required to be maintained may be reduced for a short put or call by any ''out-of-the-money.'' The amount to which the margin required may be reduced is set forth in a separate column.

The Exchange is proposing to add margin treatment for related securities positions involving OTC options held in a customer margin account. The Exchange is proposing to add special margin treatment for covered write convertibles, covered calls/puts, spreads, and straddles involving OTC options. The proposed margin treatment is the same treatment that is set forth in NYSE Rule 431 except for the change to cap the minimum margin on short puts.

[8] *Id.*

[9] *See* Regulation T, Section 220.4(b).

[10] The Commission notes that the CBOE's margin rule for interest rate option contracts is 23.13 and not 23.12 as indicated in the CBOE's filing.

[11] Telephone conversation between Diane Malley, Supervisor, Department of Financial Compliance, CBOE, Timothy Thompson, Senior Attorney, Legal Department, CBOE, and Chester McPherson, Staff Attorney, Division of Market Regulation, Commission, April 10, 1997.

[12] *See* NYSE Rule 431(f)(2)(H)(i).

[13] *See* NYSE Rule 431(f)(2)(D)(iii).

Customer Cash Account

The Exchange is proposing to add a provision to Rule 12.3 detailing the circumstances under which a customer may carry short equity options in a cash account, *i.e.*, an account in which no credit is extended. This provision is consistent with a provision in Regulation T and is being added so that the CBOE rule is more complete, thus enabling its members to rely on such rules for all aspects of margin regulation. The proposed rule would permit either a call option contract or a put option contract held in a short position to be carried in a cash account if the option contract is covered, *i.e.*, if the account contains one of the specified offsets.

In the case of a short call, allowable offsets include: (i) The underlying security, in an amount equal to or greater than that underlying the option, provided the option premium is held in the account until full cash payment for the underlying security is received; (ii) a security immediately convertible without the payment of money into an equal or greater quantity of the security underlying the option, if such security is held or purchased in the account, on the same day provided that the option premium is held in the account until full cash payment for the convertible security is received and the ability to convert does not expire before the expiration of the short call option; or (iii) an escrow agreement issued by a bank and either held in the account at the time the call is written or received in the account promptly thereafter.

In the case of a short put option, allowable offsets include (i) Cash or cash equivalents as defined in Regulation T of not less than the aggregate put exercise amount; or (ii) an escrow agreement issued by a bank which is obligated to deliver the required cash in the event of assignment of the short put.

CBOE Rule 24.11A currently permits certain debit put spreads to be carried in a cash account.[14] The Exchange is proposing to move certain provisions from Rule 24.11A into Rule 12.3. In addition, the Exchange will propose the expansion of the types of strategies that may be carried in a cash account in the Second Margin Filing.

Market Maker and Specialist Accounts

The CBOE rules and the rules of the other regulatory bodies have always distinguished the margin treatment for market-makers and specialists from that applicable to customers and other broker-dealers because of the unique position of market-makers and specialists in maintaining liquid markets. The rules recognize that options market-makers and specialists must engage in various hedging transactions to manage the risk involved in fulfilling their role. Specific provisions governing permitted offset treatment for market-makers and specialists are being deleted from Regulation T, which as a result will defer to the rules of the SROs.

The proposed rule sets forth various permitted offset positions which may be cleared and carried by a member organization on behalf of one or more registered specialists, registered market-makers, or Designated Primary Market-Makers (hereinafter referred to generically as ''market-makers'') upon a margin basis satisfactory to the concerned parties. A permitted offset position will be defined to mean, in the case of an option in which a market-maker makes a market, a position in the underlying instrument or other related instrument, and in the case of other securities in which a market-maker makes a market, a position in options overlying the securities in which a market-maker makes a market, if the account holds the following positions: (i) A long position in the underlying instrument offset by a short option position which is ''in- or at-the-money''; (ii) a short position in the underlying instrument offset by a long option position which is ''in- or at-the-money''; (iii) a stock position resulting from the assignment of a market-maker short option position; (iv) a stock position resulting from the exercise of a market-maker long position; (v) a net long position in a security (other than an option) in which a market-maker makes a market; (vi) a net short position in a security (other than an option) in which the market-maker makes a market; or (vii) an offset position as defined in SEC Rule 15c3–1.

For purposes of the rule, ''in- or at-the-money'' means the current market price of the underlying security is not more than two standard exercise price intervals below (with respect to a call option) or above (with respect to a put option) the exercise price of the option. In determining the types of instruments which are entitled to be carried in a permitted offset position, reference can be made to the definition of ''related instrument'' which is set forth in the rule. ''Related instrument'' within an option class or product group is any related derivative product that meets the offset level requirements for product groups under Rule 15c3–1, including its appendices (the net capital rule) of the Act, or any applicable SEC staff interpretations or no-action positions (hereinafter referred to collectively as ''SEC Rule 15c3–1''). The term ''product group'' means two or more option classes, related instruments, and qualified stock baskets for which it has been determined that a percentage of offsetting profits may be applied to losses in the determination of net capital as set forth in SEC Rule 15c3–1.

The Exchange is also proposing to add a provision regarding trading in an account in a deficit. The addition generally states that nothing shall prohibit the carrying firm from effecting hedging transactions in the deficit account with the prior written approval of the carrying firm's SEC designated examining authority.

The Exchange is also proposing in the Second Margin Filing to permit a market-maker to receive market-maker margin treatment on transactions in options or other derivative securities effected on an exchange of which that market-maker is not a member and on which that market-maker is not registered as a market-maker if the options or other derivative securities are dually listed on the exchange on which that market-maker is a registered market-maker, or if the transactions are recognized offsets as defined by Rule 15c3–1 under certain conditions specified in the proposed rule.

Broker-Dealer Account

The Exchange is also proposing to add a provision that would provide margin relief to accounts held by non-market-maker broker-dealers. Under the new provision, a member organization may carry the proprietary account of another registered broker-dealer upon a margin basis which is satisfactory to both parties, provided the requirements of Regulation T are adhered to and the account is not carried in a deficit equity condition. The amount of any deficiency between the equity maintained in the account and the margin required by the other provisions of this Rule shall be deducted in computing the net capital of the member organization under Rule 15c3–1 of the Act. This new provision is similar to the provision of NYSE Rule 431(e)(6), and would permit the proprietary accounts of all registered broker-dealers to be carried on a ''good faith'' margin basis for purposes of maintenance margin. Broker-dealers would still be subject to initial margin requirements under Exchange rules and Regulation T.

[14] The Commission notes that CBOE Rule 24.11A relates to debit put spread cash account transactions, and not Rule 24.11 as indicated in the rule filing.

Interpretations to Rule 12.3

The Exchange is proposing to add four interpretations to Rule 12.3. Also, current Interpretation .01 to Rule 12.3 is proposed to be deleted because the interpretation concerns SuperShares, which the Exchange no longer trades. The Exchange is also proposing to delete interpretation .07 of Rule 24.11 because it also concerns SuperShares. New Interpretation .01 would set forth in a chart form the margin requirements applicable to short positions in listed options and in index and foreign currency warrants. The general requirement is that margin is required equal to the current market value of the option/warrant plus the applicable percentage of the underlying instrument (set forth in the chart). The margin required may be reduced by any ''out-of-the money'' amount, as defined in the rule. However, the margin may not be reduced below the option market value plus a different specified percentage of the current market value of the underlying instrument as set forth in the chart. The determination of the ''out-of-the-money amount'' is also set forth in a separate chart.

As described above, Interpretation .02 describes how a member organization may determine ''current market value'' in the event there is no closing price or trading has been halted.

Interpretation .03 specifies that for purposes of the CBOE margin rules, index warrants should be treated as if they were index options unless the rules specify otherwise. The Exchange states that this interpretation is consistent with the position of the Commission and recognizes that the two types of products are essentially equivalent from a market risk standpoint.

Changes to Rule 12.11

The Exchange is proposing a minor change to Rule 12.11. Rule 12.11 allows a member organization that is a member of the NYSE to elect to be bound by the rules of the NYSE instead of the requirements set forth in Rules 12.3 to 12.10. The Exchange is changing Rule 12.11 to allow the member organization to exempt themselves from Rules 12.3 to 12.9, but not from 12.10. Rule 12.10 establishes that the margin requirements set forth in the rule are minimum requirements and authorizes the Exchange to impose higher margin requirements when it deems such higher requirements to be advisable. The Exchange has determined that it is necessary to clarify that the Exchange may still impose higher margin requirements on its members when the Exchange believes such higher requirements are warranted, even when those members have elected to generally be subject to the margin rules of the NYSE. The Exchange believes that because it will be in the best position to determine when higher margin requirements may be required for positions in Exchange-traded products it should not allow a member to exempt itself from this provision. The change to Rule 12.11 also makes it clear that if a member organization chooses to be bound by NYSE margin rules it will be exempt not only from CBOE margin rules in Chapter 12, but also from those margin rules in other chapters of the Exchange's rules.

Changes to Rule 24.11

The Exchange is proposing to add to Rule 24.11 (which covers margin requirements for index options) a provision setting forth the margin requirements for covered calls and covered puts that is essentially identical to the provision applicable to equity options.[15] In addition, the Exchange is proposing to add a definition of ''qualified stock basket'' to Rule 24.11. This definition is used to describe allowable offsets in customer accounts for covered calls and covered puts. In addition, the Exchange makes a cross-reference to the provision of Rule 12.3 that governs the cash account treatment of short index options offset by long index options. Finally, the Exchange is proposing to change Interpretation .04 that defines ''cash equivalent.'' Instead of specifically defining cash equivalent as it is currently defined in the rule, the Exchange has decided to defer to the definition in Regulation T because the Exchange expects that the definition in Regulation T may change from time to time.

2. Statutory Basis

The basis under the Act for this proposed rule change is the requirement under Section 6(b)(5) that an exchange have rules that are designed to prevent fraudulent and manipulative acts and practices, to promote just and equitable principles of trade, to foster cooperation and coordination with persons engaged in regulating, clearing, settling, processing information with respect to, and facilitating transactions in securities, to remove impediments to protect and perfect the mechanism of a free and open market and a national market system, and in general, to protect investors and the public interest.

The proposed rule change: (i) Establishes CBOE rules to govern areas of margin regulation that will no longer be addressed by Regulation T of the Board of Governors of the Federal Reserve System, (ii) conforms certain CBOE margin rules to those of the NYSE, and (iii) corrects or clarifies current provisions of the CBOE margin rules. The Exchange believes that the proposed rule change, is consistent with, and furthers, the objectives of Section 6(b)(5) of the Act.

*B. Self-Regulatory Organization's Statement on Burden on Competition*

The CBOE does not believe that the proposed rule change will impose any burden on competition.

*C. Self-Regulatory Organization's Statement on Comments on the Proposed Rule Change Received From members, Participants or Others*

No written comments were solicited or received with respect to the proposed rule change.

## III. Date of Effectiveness of the Proposed Rule Change and Timing for Commission Action

Within 35 days of the date of publication of this notice in the **Federal Register** or within such longer period (i) as the Commission may designate up to 90 days of such date if it finds such longer period to be appropriate and publishes its reasons for so finding or (ii) as to which the self-regulatory organization consents, the Commission will:

(A) by order approve such proposed rule change, or

(B) institute proceedings to determine whether the proposed rule change should be disapproved.

## IV. Solicitation of Comments

Interested persons are invited to submit written data, views and arguments concerning the foregoing. Persons making written submissions should file six copies thereof with the Secretary, Securities and Exchange Commission, 450 Fifth Street, NW., Washington, DC 20549. Copies of the submission, all subsequent amendments, all written statements with respect to the proposed rule change that are filed with the Commission, and all written communications relating to the proposed rule change between the Commission and any person, other than those that may be withheld from the public in accordance with the provisions of 5 U.S.C. 552, will be available for inspection and copying in the Commission's Public Reference Room. Copies of all such filing will also be available for inspection and copying at the principal office of the CBOE. All

[15] *See, e.g.,* NYSE Rule 431(f)(2)(H)(i).

submissions should refer to the file number SR–CBOE–97–17 and should be submitted by May 12, 1997.

For the Commission, by the Division of Market Regulation, pursuant to delegated authority.[16]

**Margaret H. McFarland,**

*Deputy Secretary.*

[FR Doc. 97–10161 Filed 4–18–97; 8:45 am]

BILLING CODE 8010–01–M

[16] 17 CFR 200.30–3(a)(12).

## SECURITIES AND EXCHANGE COMMISSION

**[Release No. 34–38513; File No. SR–NASD–97–26]**

## Self-Regulatory Organizations; Notice of Filing of Proposed Rule Change by the National Association of Securities Dealers, Inc. Relating to an Expansion of the Pilot for the NASD's Rule Permitting Market Makers To Display Their Actual Quotation Size

April 15, 1997.

Pursuant to Section 19(b)(1) of the Securities Exchange Act of 1934 (''Exchange Act''), 15 U.S.C. 78s(b)(1), notice is hereby given that on April 11, 1997, the National Association of Securities Dealers, Inc. (''NASD'' or ''Association'') filed with the Securities and Exchange Commission (''Commission'' or ''SEC'') the proposed rule change as described in Items I, II, and III below, which Items have been prepared by the NASD. The Commission is publishing this notice to solicit comments on the proposed rule change from interested persons. For the reasons discussed below, the Commission is granting accelerated approval of the extension.

### I. Self-Regulatory Organization's Statement of the Terms of Substance of the Proposed Rule Change

The NASD proposes to amend NASD Rule 4613(a)(1)(C) to allow market makers to quote their actual size by reducing the minimum quotation size requirement for market makers in certain securities listed on The Nasdaq Stock Market (''Nasdaq'') to one normal unit of trading (''Actual Size Rule''). As discussed below, the Actual Size Rule presently applies to a group of fifty Nasdaq securities on a pilot basis. The text of the proposed rule change is as follows. (Additions are italicized; deletions are bracketed.)

* * * * *

NASD Rule 4613 Character of Quotations

(a) Two-Sided Quotations

(1) No change.

(A)–(B) No change.

(C) As part of a pilot program implemented by The Nasdaq Stock Market, during the period January 20, 1997 through at least [July 18] *December 19*, 1997,[1] a registered market maker in a security listed on The Nasdaq Stock Market that became subject to mandatory compliance with SEC Rule 11Ac1–4 on [January 20, 1997] *or prior to February 24, 1997* must display a quotation size for at least one normal unit of trading (or a larger multiple thereof) when it is not displaying a limit order in compliance with SEC Rule 11Ac1–4, provided, however, that a registered market maker may augment its displayed quotation size to display limit orders priced at the market maker's quotation.

* * * * *

### II. Self-Regulatory Organization's Statement of the Purpose of, and Statutory Basis for, the Proposed Rule Change

In its filing with the Commission, the NASD included statements concerning the purpose of and basis for the proposed rule change and discussed any comments it received on the proposed rule change. The text of these statements may be examined at the places specified in Item IV below. The NASD has prepared summaries, set forth in Sections A, B, and C below, of the most significant aspects of such statements.

*A. Self-Regulatory Organization's Statement of the Purpose of, and Statutory Basis for, the Proposed Rule Change*

1. Introduction and Background

On August 29, 1996, the Commission promulgated a new rule, the Limit Order Display Rule[2] and adopted amendments to the Quote Rule,[3] which together are designed to enhance the quality of published quotations for securities and promote competition and pricing efficiency in U.S. securities markets (these rules are collectively referred to hereinafter as the ''Order Execution Rules'').[4] With respect to securities included on Nasdaq (''Nasdaq securities''), the Order Execution Rules are being implemented according to a phased-in implementation schedule. Fifty Nasdaq securities became subject to the rules on January 20, 1997 (''first fifty''); fifty more securities became subject to the rules on February 10, 1977 (''second fifty''); and an additional fifty securities became subject to the rules on February 24, 1997. The remaining Nasdaq securities will become subject to the rules according to time tables established by the Commission.[5]

In particular, the SEC's Limit Order Display Rule requires the display of customer limit orders, that: (1) Are priced better than a market maker's quote;[6] or (2) add to the size associated with a market maker's quote when the market maker is at the best price in the market.[7] By virtue of the Limit Order Display Rule, investors now have the ability to directly advertise their trading interest to the marketplace, thereby allowing them to compete with market maker quotations and affect the size of bid-ask spreads.[8] The Order Execution Rules also included amendments to the SEC's Quote Rule, the most significant of which requires market makers to display in their quote any better priced orders that the market maker places into an electronic communications network (''ECN'') such as SelectNet or Instinet (''ECN Rule''). Alternatively, instead of updating its quote to reflect better priced orders entered into an ECN, a market maker may comply with the display requirements of the ECN Rule through the ECN itself, provided the ECN: (1) ensures that the best priced orders entered by market makers into the ECN are included in the public quotation; and (2) provides brokers and dealers access to orders entered by

[1] In File SR–NASD–97–25, the NASD proposed to extend the pilot program to July 18, 1997. *See* Securities Exchange Act Release No. 38512 (April 15, 1997).

[2] 17 CFR 240.11Ac1–4.

[3] 17 CFR 240.11Ac1–1.

[4] *See* Securities Exchange Act Release No. 37619A (September 6, 1997), 61 FR 48290 (September 12, 1996) (''Order Execution Rules Adopting Release'')

[5] *See, e.g.,* Securities Exchange Act Release No. 38490 (April 9, 1997).

[6] For example, if a market maker's quote in stock ABCD is 10–10¼ (1000×1000) and the market maker receives a customer limit order to buy 200 shares at 10⅛, the market maker must update its quote to 10⅛–10¼ (200×1000).

[7] For example, if a market maker receives a customer limit order to buy 200 shares of ABCD at 10 when its quote in ABCD is 10–10¼ (1000×1000) and the NBBO for ABCD is 10–10⅛, the market maker must update is quote to 10–10¼ (1200×1000).

[8] There are eight exceptions to the immediate display requirement of the Limit Order Display Rule: (1) customer limit orders executed upon receipt; (2) limit orders placed by customers who request that they not be displayed; (3) limit orders for odd-lots; (4) limit orders of block size (10,000 shares or $200,000); (5) limit orders routed to a Nasdaq or exchange system for display; (6) limit orders routed to a qualified electronic communications network for display; (7) limit orders routed to another member for display; and (8) limit orders that are all-or-none orders. *See* Rule 11Ac1–4(c).

market makers into the ECN, so that brokers and dealers who do not subscribe to the ECN can trade with those orders (''ECN Display Alternative'').

In order to facilitate implementation of the SEC's Order Execution rules and reflect the order-driven nature of the Nasdaq market that was to be brought about by the implementation of these rules, the Commission approved, on January 10, 1997, a variety of amendments to NASD Rules pertaining to Nasdaq's Small Order Execution System (''SOES'') and the SelectNet Service (''SelectNet'').[9] In particular, one of the NASD Rule changes approved by the Commission provides on a temporary basis that Nasdaq market makers in the first fifty securities subject to the Commission's Limit Order Display Rule are required to display a minimum quotation size of one normal unit of trading when quoting solely for their own proprietary account (*i.e.*, the Actual Size Rule).[10] For Nasdaq securities outside of the first fifty, the minimum quotation size requirements remained the same.[11]

The NASD submitted the proposal for the Actual Size Rule because it believed, and continues to believe, that the new order-driven nature of Nasdaq brought about by the Limit Order Display Rule obviates the regulatory justification for minimum quote size requirements because investors now have the capability to display their own orders on Nasdaq. The NASD originally imposed the Mandatory Quote Size Requirements to ensure an acceptable level of market liquidity and depth in an environment where Nasdaq market makers were the only market participants who could impact quotation prices. Now that the Limit Order Display Rule permits investors to directly impact quoted prices, however, the NASD believes it is appropriate to treat Nasdaq market makers in a manner equivalent to exchange specialists and not subject them to minimum quote size requirements when they are not representing customer orders. In sum, with the successful implementation of the SEC's Order Execution Rules, the NASD believes that Mandatory Quote Size Requirements impose unnecessary regulatory burdens on market makers.

At the same time, the NASD does not believe that implementation of the Actual Size Rule in an environment where limit orders are displayed has or will compromise the quality of the Nasdaq market. First, the display of customer limit orders enhances the depth, liquidity, and stability of the market and contributes to narrower quoted spreads, thereby mitigating the effects of the loss of displayed trading interest, if any, by market makers. Second, removing artificial quote size requirements may lead to narrower market maker spreads, thereby reducing investors' transaction costs. Third, permitting market makers to quote in size commensurate with their own freely-determined trading interest will enhance the pricing efficiency of the Nasdaq market and the independence and competitiveness of dealers quotations. Fourth, removing quotation size requirements will facilitate greater quote size changes, thereby increasing the information content of market maker quotes by facilitating different quote sizes from dealers who have a substantial interest in the stock at a particular time and those who do not.

Indeed, in its order approving the Actual Size Rule, the Commission noted that it ''preliminarily believes that the proposal will not adversely affect market quality and liquidity''[12] and that it ''believes there are substantial reasons * * * to expect that reducing market makers' proprietary quotation size requirements in light of the shift to a more order-driven market would be beneficial to investors.''[13] In addition, the Commission stated that, ''based on its experience with the markets and discussions with market participants, [it] believes that decreasing the required quote size will not result in a reduction in liquidity that will hurt investors.''[14]

Nevertheless, in light of concerns raised by commentators opposed to the Actual Size Rule regarding the potential adverse impacts of the rule on market liquidity and volatility, the Commission originally determined to approve the rule on a three-month pilot basis to afford the Commission and the NASD an opportunity to gain practical experience with the rule and evaluate its effects. The factors identified by the Commission to be considered in this evaluation include, among others the impact of reduced quotation sizes on liquidity, volatility and quotation spreads.[15]

As detailed below, the NASD has concluded that implementation of the SEC's Order Execution Rules has significantly improved the quality of the Nasdaq market by creating a market structure where customer limit orders provide liquidity and effectively compete with market maker quotations. In this type of environment, the NASD believes the regulatory necessity for the Mandatory Quote Size Requirements to longer exists. Accordingly, the NASD is proposing the pilot be expanded to include an additional 100 securities and extended until December 19, 1997.[16]

2. *Economic Analysis of the Actual Size Rule*[17]

Research conducted by the NASD's Economic Research Department indicates three general findings concerning implementation of the SEC's Order Execution Rules and the Actual Size Rule: (1) The SEC's Order Execution Rules have dramatically improved the quality of the Nasdaq market, particularly with respect to the size of quoted spreads; (2) among those securities subject to the SEC's Order Execution Rules, there is no appreciable difference in market quality between those securities subject to the Actual Size Rule and those securities subject to Mandatory Quote Size Requirements;[18]

[9] *See* Securities Exchange Act Release No. 38156 (January 10, 1997), 62 FR 2415 (January 16, 1997) (order partially approving SR–NASD–96–43 and approving the Actual Size Rule on a pilot basis) (''Actual Size Rule Approval Order'').

[10] Thus, the Actual Size Rule does not effect a market maker's obligation to display the full size of a customer limit order. If a market maker is required to display a customer limit order for 200 or more shares, it must display a quote size of at least 200 shares absent an exception from the Limit Order Display Rule.

[11] In particular, NASD Rule 4613(a)(2) requires each market maker in a Nasdaq issue other than those in the first fifty to enter and maintain two-sided quotations with a minimum size equal or greater than the applicable SOES tier size for the security (e.g., 1000, 500 or 200 shares for Nasdaq National Market issues and 500 or 100 shares for Nasdaq SmallCap Market issues) (''Mandatory Quote Size Requirement'').

[12] *See* Actual Size Approval order, supra note 8, 62 FR at 2425.

[13] *Id.* 62 FR at 2423.

[14] *Id.* 62 FR at 2424.

[15] *See* 62 FR 2415 at 2425.

[16] The additional 100 securities would be the Nasdaq securities phased-in under the Order Execution Rules on February 7, 1997 and February 24, 1997. Therefore, the Actual Size Rule pilot would apply to a total of 150 securities.

[17] The Commission notes that the NASD has not completed its study of the effects of the Actual Size Rule. The Commission, therefore, believes that the results of the analysis are to be considered preliminary.

[18] The first fifty securities include Nasdaq's top ten issues by dollar volume plus 40 issues chosen from Nasdaq's top 500 issues: 8 ranked between 11 and 100; 8 ranked between 101 and 200; 8 ranked between 201 and 300; 8 ranked between 301 and 400; 8 ranked between 401 and 400. The second fifty securities include the ten Nasdaq stocks ranked between 11 and 20 by dollar volume plus 40 stocks chosen from Nasdaq's top 500 stocks in the same manner explained above. The ten largest Nasdaq stocks in the first fifty have no comparable peer group among Nasdaq stocks and the next ten largest Nasdaq stocks (*i.e.*, Nasdaq stocks ranked 11–20 in size) included in the second fifty are also not comparable to the ''bottom 40'' of either the first fifty or second fifty. The Nasdaq stocks ranked 1–20, therefore, have been excluded from the analysis comparing the first fifty and the second fifty. Accordingly, the ''first forty'' stocks are those stocks that are the ''bottom 40'' within the first fifty stocks and the ''second forty'' stocks are those stocks that are the ''bottom 40'' within the second fifty stocks.

and (3) implementation of the Actual Size Rule has not resulted in any significant diminution of the ability of investors to receive automated executions through SOES, SelectNet, or proprietary systems operated by broker-dealers. Accordingly, as is the case with 100-share minimum quotation size requirements applicable to exchange specialists in order-driven markets, the NASD believes the Actual Size Rule has not harmed investors or the quality of the Nasdaq market.

While some market participants may maintain that the Actual Size Rule should be abandoned because it has not had a demonstrably positive market impact, the NASD believes that the Rule should be retained because it eliminates an unnecessary regulatory requirement and, moreover, it has not had any adverse market impacts. In particular, with respect to the first fifty securities, the NASD believes that competitive forces in the marketplace, be they the result of displaying customer limit orders or market maker competition for order flow, have driven the Nasdaq market to perform the same as if the artificial 1,000 share minimum quotation size requirement was in place.[19] As a result, given that the market performs the same with or without the Actual Size Rule, the NASD believes it is far preferable for the protection of investors and the efficiency of the capital formation process to promote a regulatory environment for Nasdaq that achieves its results through aggressive competition rather than artificial regulatory fiat. In sum, in light of the performance of the first fifty securities, the NASD believes there is no regulatory basis to justify the retention of artificial quotation size requirements for Nasdaq market makers.

a. Implementation of the SEC's Order Execution Rules Has Resulted in Significant Benefits to Investors and Enhanced the Quality of the Nasdaq Market

The NASD's analysis of the markets for the first 150 Nasdaq securities subject to the SEC's Order Execution Rules shows that:[20]

- Quoted spreads have narrowed 32.3%;[21] effective spreads have narrowed 24.6%; and actual dollar spreads have narrowed 31.8%.[22]
- Average dealer spreads have narrowed 3.8%.
- The amount of time the inside spread was equal to an ⅛th increased 104.9%, meaning that quoted spreads in these securities were equal to their narrowest quote increment 47.8% of the time. In addition, inside spreads were equal to or less than a ¼th 77.1% of the time.
- The average number of market makers per stock increased 5.6%, or 1.1 market makers per stock.
- The maximum quoted depth of any single market maker at the inside bid or offer increase 37.2%.
- There has been a noticeable increase in the number of quotation updates greater than 1,000 shares. In particular, whereas before implementation of the Actual Size Rule market makers virtually never displayed sizes greater than 1,000 shares, since the rule has been in effect, 6.3% of all market maker quote updates have been for greater than 1,000 shares.

b. The Market Behavior of the ''First Forty'' Securities is Very Similar to the Market Behavior of the ''Second Forty'' Securities

While the data set forth above indicates that implementation of the SEC's Order Execution Rules have been associated with dramatically narrower spread and improvements in other indicia of market quality, the NASD believes that the similar performance of the second forty securities to the first forty securities indicates that the Actual Size Rule did not impair the markets for these securities. In particular, a comparison of the first forty securities and the second forty securities reveals that:[23]

- Dollar quoted spreads decreased 33.8% for the first forty securities and 33.7% for the second forty.
- Effective spreads decreased 26.6% for the first forty securities and 27.4% for the second forty.
- Actual dollar spreads decreased 30.5% for the first forty securities and 33% for the second forty.
- Dealer dollar spreads decreased 7.4% for the first forty securities and 4.9% for the second forty.
- The average number of market makers for the first forty securities increased 4.1% and the average for the second forty increased 2.7%.
- 10% of the quote updates by market makers in the first forty securities were for 100 shares, as compared to 5.7% for the second forty.
- 66.5% of the quote updates by market makers in the first forty securities were for 1,000 shares, as compared to 77.5% for the second forty.
- 6.0% of the quote updates by market makers in the first forty securities were for greater than 1,000 shares, as compared to 6.2% for the second forty.
- By one measure of market liquidity, the amount of transaction volume required to move the bid-ask midpoint (''BAM''),[24] liquidity for both groups of

[19] Some market participants may assert that the lack of difference in performance between the first forty securities and the second forty is attributable to the operation of several features of SOES. Specifically, these market participants may claim that the SOES Auto-Refresh Feature, which refreshes a market maker quote to the applicable SOES tier size once its quote has been completely decremented, along with the ''No Decrementation'' and ''Supplemental Size'' features of SOES, artificially increase the number of 1000-share quotes in the first fifty securities. The ''No Decrementation'' feature of SOES allows a market maker to provide that its quote shall not be decremented after the execution of SOES orders. To use this feature, a market maker's quote size must be equal to the applicable SOES tier size. The ''Supplemental Size'' feature of SOES allows a market maker to establish a ''supplemental size'' that is used to automatically replenish a market maker's quote once it has been completely decremented. When a market maker's quote is replenished from the supplemental size, it is replenished to 1000 shares. In order to use this feature, a market maker must initially enter a quote size equal to or greater than the applicable SOES tier size. The NASD notes that market maker use of each of these system features is completely voluntary and they are available for all Nasdaq securities. Accordingly, the NASD believes it would be inaccurate to assert that these SOES features have obfuscated the impact of the Actual Size Rule.

[20] Statistics concerning the first 150 Nasdaq securities subject to the Order Execution Rules reflect a comparison of the markets for these securities for the 20 trading days before January 20, 1997 and the 24 trading days after February 24, 1997.

[21] A *quoted spread* is the difference between the inside bid and ask. The individual dollar spreads used to calculate the average for a given stock are weighted by the amount of time each spread was in effect for the day, *i.e.*, the spread's duration.

[22] An *effective spread* is measured by taking the absolute difference between a transaction price and the bid-ask midpoint, multiplied by two. Each effective spread is weighted by the share volume of the associated transaction. An *actual spread* is measured by taking the transaction price minus the bid-ask midpoint for market maker sells, and the bid-ask midpoint minus the transaction price for market makers buys. The figure is multiplied by two to compare the quoted spread, and the average is volume-weighted.

[23] The comparison of the first forty securities and the second forty securities is based on an analysis of the 31 trading days after February 10, 1997.

[24] Under this analysis, volume is summed for each day until the BAM has moved away from the starting BAM (the ''based'') by a specific amount. Once this occurs, the base BAM is reassigned and volume is summed again until the bid-ask midpoint has moved again by the specified amount. For example, consider the calculation of ''Volume Per $.125 to $.25 Movement in the BAM.'' If the bid-ask midpoint is 20 for ABCD security at the beginning of the day, the algorithm will sum volume until the bid-ask midpoint has moved to at least $20.125 but less than $20.25, or at most $19.75 but at least $19.875. If such a movement should occur, the algorithm will note the total volume and use it as one observation in final calculations. Volume is defined as net volume transacted by

Continued

securities appears to have diminished at narrower price movements, but less so larger price movements.[25] Specifically, the amount of stock needed to move the BAM 1/16 to an 1/8 decreased 26.5% for the first forty securities and 21.3% for the second forty. In addition, the amount of stock needed to move the BAM an 1/8 to a 1/4 decreased 11.7% for the first forty and 4.9% for the second forty. It is interesting to note, however, that the performance of the two groups begins to diverge for larger BAM movements. Specifically, the amount of stock needed to move the BAM 3/8ths to a 1/2 increased .2% for the first forty, but decreased 4.5% for the second forty. Similarly, the amount of stock needed to move the BAM greater than a 1/2 increased 6.1% for the first forty, but decreased 1.1% for the second forty.

- By two measures, volatility in the first forty securities has declined since implementation of the Actual Size Rule. However, by two other measures volatility increased.[26] Specifically, for the first forty securities, the percentage change in the range of trade prices decreased 6.6% [27] and the percentage change in the standard deviation of trade prices declined .78% [28] On the other hand, the percentage change in the range of the BAM increased 3.44% [29] and the percentage change in the standard deviation of the BAM increased 1.7% [30] In comparison, for the second forty securities, the percentage change in the range of trade prices increased 8.5%; the percentage change in the standard deviation of trade prices increased 18.68%; the percentage change in the range of the BAM increased 24.52%; and the percentage change in the standard deviation of the BAM increased 25.82%. While it may appear that volatility did not increase in the first forty to the same extent that it did for the second forty, once differences in volume between the two groups are controlled or ''normalized,'' these apparent differences in volatility decline significantly.

c. Implementation of the Actual Size Rule Has Not Resulted in Any Diminution in the Ability of Investors to Receive Automated Executions Through SOES, SelectNet, or Other Proprietary Systems Operated by Broker Dealers

The NASD believes that the following statistics indicate that implementation of the Actual Size Rule has not diminished the ability of small investors to receive automated executions through SOES up to the size of their SOES orders.[31]

- For the top ten Nasdaq stocks, 99% of SOES volume and 99% of SOES trades were executed at one price. Thus, for all but 1% of SOES orders, investors received SOES executions at the price and size they desired. Similarly, for the first forty securities, 98% of SOES volume and 98% of SOES trades received an execution at one price.
- For the top ten Nasdaq stocks, the aggregate depth of all market makers at the inside was less than 1,000 shares 2.7% of the time. Similarly, for the first forty securities, the aggregate depth of all market makers at the inside was less than 1,000 shares 7.85% of the time.
- For the top ten stocks, the aggregate depth of all market makers at the inside was less than 500 shares 1.6% of the time. Similarly, for the first forty securities, the aggregate depth of all market makers at the inside was less than 500 shares 4.3% of the time.

Moreover, SOES volume and SelectNet volume in the first fifty securities indicates that the Actual Size Rule has had no impact on the ability of investors to receive executions through SOES or SelectNet. In fact, as detailed below, volume in both these systems has increased since implementation of the Actual Size Rule.[32]

- The average daily share volume through SOES increased 1.08 million shares a day, or 8.8%.
- The average daily dollar volume through SOES increased $44.53 million a day, or 4.6%.
- The average daily share volume through SelectNet increased 5.29 million shares a day, or 176.8%.
- The average daily dollar volume through SelectNet increased $303.18 million a day, or 140.3%.

Finally, the NASD notes that several NASD members operate their own automated trading systems that guarantee execution of customer orders up to the applicable SOES tier size or greater. The NASD estimates that these systems accommodate a significantly large number of the customer accounts participating in the Nasdaq market. Based on an informal survey of several of these firms, the NASD is aware of no instances where a firm has significantly changed the execution guarantees provided through its automated execution system.

3. Statutory Basis

For the reasons noted above, the NASD believes the proposed rule change is consistent with Sections 11A(a)(1)(C), 15A(b)(6), 15A(b)(9), and 15A(b)(11) of the Exchange Act. Section 11A(a)(1)(C) provides that it is in the public interest to, among other things, assure the economically efficient execution of securities transactions and the availability to brokers, dealers, and investors of information with respect to quotations for and transactions in securities. Section 15A(b)(6) requires that the rules of a national securities association be designed to prevent fraudulent and manipulative acts and practices, to promote just and equitable principles of trade, to foster cooperation and coordination with persons engaged in regulating, clearing, settling, processing information with respect to, and facilitating transactions in securities, to remove impediments to and perfect the mechanism of a free and open market and a national market system and in general to protect investors and the public interest. Section 15A(b)(9) requires that rules of an Association not impose any burden on competition not necessary or appropriate in furtherance of the

market makers in a principle capacity with a non-market maker or another market maker acting as agent. All transactions in which two market makers trade as agent or two non-market makers trade are excluded from the calculations. If market makers (in aggregate) are net sellers (buyers) before an increase (decrease) in the BAM, then this occurrence is included in the above analysis. If, however, market makers are net sellers (buyers) before a decrease (increase) in the BAM, then this ''counter-intuitive'' occurrence is excluded from this analysis. ''Counter-intuitive'' cases accounted for about 35% of the total events analyzed.

[25] Because customer limit orders can now effect the inside market under the Display Rule, the NASD believes it would be expected that liquidity would decrease with respect to smaller price movements.

[26] In this connection, it is also important to note that volatility for stocks included in the top 1,000 Nasdaq stocks that were not subject to the Order Handling Rules increased as well. Specifically, the standard deviation of the BAM increased 12.8% for this group of stocks.

[27] *Range of the trade price* measures the range of price movement over a day as a percentage of the days' highest price. The calculation takes the difference between the day's highest transaction price and the day's lowest transaction price, divided by the highest transaction price.

[28] *Standard deviation of price* measures the ''bounce'' in trade price over the course of a day. Technically, it is the standard deviation of the logarithm of prices observed during a given day. The use of logarithms results in a measure that represents the volatility of price relative to the level of price.

[29] *Range of the Bid-Ask Midpoint* is calculated by taking the difference between the day's high value of the bid-ask midpoint minus the low value, divided by the high value.

[30] *Standard deviation of the Bid-Ask Midpoint* measures the ''bounce'' in the bid-ask midpoint over the course of a day. It uses the same calculation as the standard deviation of price, substituting the bid-ask midpoint for trade price.

[31] The statistics concerning SOES accessibility are based on the 20 trading days following February 10, 1997.

[32] The statistics concerning SOES volume and SelectNet volume are based on the 31 trading days following February 10, 1997.

purposes of the Exchange Act. Section 15A(b)(11) requires the NASD to, among other things, formulate rules designed to produce fair and informative quotations.

*B. Self-Regulatory Organization's Statement on Burden on Competition*

The NASD believes that the proposed rule change will not result in any burden on competition that is not necessary or appropriate in furtherance of the purposes of the Exchange Act.

*C. Self-Regulatory Organization's Statement on Comments on the Proposed Rule Change Received From Members, Participants, or Others*

Comments were neither solicited nor received.

**III. Date of Effectiveness of the Proposed Rule Change and Timing for Commission Action**

Within 35 days of the date of publication of this notice in the **Federal Register** or within such longer period (i) as the Commission may designate up to 90 days of such date if it finds such longer period to be appropriate and publishes its reasons for so finding or (ii) as to which the NASD consents, the Commission will:

A. By order approve such proposed rule change, or

B. Institute proceedings to determine whether the proposed rule change should be disapproved.

**IV. Solicitation of Comments**

Interested persons are invited to submit written data, views, and arguments concerning the foregoing. Persons making written submissions should file six copies thereof with the Secretary, Securities and Exchange Commission, 450 Fifth Street, NW., Washington, DC 20549. Copies of the submission, all subsequent amendments, all written statements with respect to the proposed rule change that are filed with the Commission, and all written communications relating to the proposed rule change between the Commission and any person, other than those that may be withheld from the public in accordance with the provisions of 5 U.S.C. 552, will be available for inspection and copying in the Commission's Public Reference Room. Copies of such filing will also be available for inspection and copying at the principal office of the NASD. All submissions should refer to the file number in the caption above and should be submitted by May 12, 1997.

For the Commission, by the Division of Market Regulation, pursuant to delegated authority.[33]

**Margaret H. McFarland,**

*Deputy Secretary.*

[FR Doc. 97–10221 Filed 4–18–97; 8:45 am]

BILLING CODE 8010–01–M

---

## SECURITIES AND EXCHANGE COMMISSION

**[Release No. 34–38512; File No. SR–NASD–97–25]**

## Self-Regulatory Organizations; Notice of Filing and Order Granting Accelerated Approval of Proposed Rule Change by the National Association of Securities Dealers, Inc. Relating to an Extension of the Pilot for the NASD's Rule Permitting Market Makers To Display Their Actual Quotation Size

April 15, 1997.

Pursuant to Section 19(b)(1) of the Securities Exchange Act of 1934 (''Exchange Act''), 15 U.S.C. 78s(b)(1), notice is hereby given that on April 11, 1997, the National Association of Securities Dealers, Inc. (''NASD'' or ''Association'') filed with the Securities and Exchange Commission (''Commission'' or ''SEC'') the proposed rule change as described in Items I, II, and III below, which Items have been prepared by the NASD. The Commission is publishing this notice to solicit comments on the proposed rule change from interested persons. For the reasons discussed below, the Commission is granting accelerated approval of the extension.

**I. Self-Regulatory Organization's Statement of the Terms of Substance of the Proposed Rule Change**

The NASD proposes to extend the effectiveness of NASD Rule 4613(a)(1)(C) until July 18, 1997.[1] NASD Rule 4613(a)(1)(C) provides that market makers in the first fifty Nasdaq securities subject to the Commission's Limit Order Display Rule are allowed to quote their actual quote size (''Actual Size Rule''). The text of the proposed rule change is as follows. (Additions are italicized; deletions are bracketed.)

* * * * *

NASD Rule 4613 Character of Quotations

(a) Two-Sided Quotations

(1) No change.

(A)–(B) No change.

(C) As part of a pilot program implemented by The Nasdaq Stock Market, during the period January 20, 1997 through at least [April] *July* 18, 1997, a registered market maker in a security listed on The Nasdaq Stock Market that became subject to mandatory compliance with SEC Rule 11Ac1–4 on January 20, 1997 must display a quotation size for at least one normal unit of trading (or a larger multiple thereof) when it is not displaying a limit order in compliance with SEC Rule 11Ac1–4, provided, however, that a registered market maker may augment its displayed quotation size to display limit orders priced at the market marker's quotation.

(2) *Except as provided in subparagraph (a)(1)(C) above,* [E]*e*ach member registered as a Nasdaq market maker in Nasdaq National Market equity securities shall display size in its quotations of 1,000, 500, or 200 shares and the following guidelines shall apply to determine the applicable size requirement:

(A)–(C) No change.

* * * * *

**II. Self-Regulatory Organization's Statement of the Purpose of, and Statutory Basis for, the Proposed Rule Change**

In its filing with the Commission, the NASD included statements concerning the purpose of and basis for the proposed rule change and discussed any comments it received on the proposed rule change. The text of these statements may be examined at the places specified in Item III below. The NASD has prepared summaries, set forth in Sections A, B, and C below, of the most significant aspects of such statements.

*A. Self-Regulatory Organization's Statement of the Purpose of, and Statutory Basis for, the Proposed Rule Change*

1. Introduction and Background

On August 29, 1996, the Commission promulgated a new rule, the Limit Order Display Rule[2] and adopted amendments to the Quote Rule[3] which together are designed to enhance the quality of published quotations for securities and promote competition and pricing efficiency in U.S. securities markets (these rules are collectively referred to

---

[33] 17 CFR 200.30–3(a)(12) (1989).

[1] The NASD has concurrently requested that the pilot for the Actual Size Rule be expanded to apply to 100 additional Nasdaq securities and extended until December 19, 1997. *See* Securities Exchange Act Release No. 38513 (April 15, 1997).

[2] 17 CFR 240.11Ac1–4.

[3] 17 CFR 240.11Ac1–1.

hereinafter as the ''Order Execution Rules'').[4] With respect to securities included on Nasdaq (''Nasdaq securities''), the Order Execution Rules are being implemented according to a phased-in implementation schedule. Fifty Nasdaq securities became subject to the rules on January 20, 1997 (''first fifty''); fifty more securities became subject to the rules on February 10, 1997 (''second fifty''); and an additional fifty securities became subject to the rules on February 24, 1997. The remaining Nasdaq securities will become subject to the rules according to time tables established by the Commission.[5]

In particular, the SEC's Limit Order Display Rule requires the display of customer limit orders, that: (1) are priced better than a market maker's quote;[6] or (2) add to the size associated with a market marker's quote when the market maker is at the best price in the market.[7] By virtue of the Limit Order Display Rule, investors now have the ability to directly advertise their trading interest to the marketplace, thereby allowing them to complete with market maker quotations and affect the size of bid-ask spreads.[8] The Order Execution Rules also included amendments to the SEC's Quote Rule, the most significant of which requires market makers to display in their quote any better priced orders that the market maker places into an electronic communications network (''ECN'') such as SelectNet or Instinet (''ECN Rule''). Alternatively, instead of updating its quote to reflect better priced orders entered into an ECN, a market maker may comply with the display requirements of the ECN rule through the ECN itself, provided the ECN: (1) ensures that the best priced orders entered by market makers into the ECN are included in the public quotation; and (2) provides brokers and dealers access to orders entered by market makers into the ECN, so that brokers and dealers who do not subscribe to the ECN can trade with those orders (''ECN Display Alternative'').

In order to facilitate implementation of the SEC's Order Execution Rules and reflect the order-driven nature of the Nasdaq market that was to be brought about by the implementation of these rules, the Commission approved, on January 10, 1997, a variety of amendments to NASD Rules pertaining to Nasdaq's Small Order Execution System (''SOES'') and the SelectNet Service (''SelectNet'').[9] In particular, one of the NASD Rule changes approved by the Commission provides on a temporary basis that Nasdaq market makers in the first fifty securities subject to the Commission's Limit Order Display rule are required to display a minimum quotation size of one normal unit of trading when quoting solely for their own proprietary account (*i.e.*, the Actual Size Rule).[10] For Nasdaq securities outside of the first fifty, the minimum quotation size requirements remained the same.[11]

The NASD submitted the proposal for the Actual Size Rule because it believed, and continues to believe, that the new order-driven nature of Nasdaq brought about by the Limit Order Display Rule obviates the regulatory justification for minimum quote size requirements because investors now have the capability to display their own orders on Nasdaq. The NASD originally imposed the Mandatory Quote Size Requirements to ensure an acceptable level of market liquidity and depth in an environmental where Nasdaq market makers were the only market participants who could impact quotation prices. Now that the Limit Order Display Rule permits investors to directly impact quoted prices, however, the NASD believes it is appropriate to treat Nasdaq market makers in a manner equivalent to exchange specialists and not subject them to minimum quote size requirements when they are not representing customer orders. In sum, with the successful implementation of the SEC's Order Executive Rules, the NASD believes that Mandatory Quote Size Requirements impose unnecessary regulatory burdens on market makers.

At the same time, the NASD does not believe that implementation of the Actual Size Rule in an environment where limit orders are displayed has or will compromise the quality of the Nasdaq market. First, the display of customer limit orders enhances the depth, liquidity, and stability of the market and contributes to narrower quoted spreads, thereby mitigating the effects of the loss of displayed trading interest, if any, by market makers, Second, removing artificial quote size requirements may lead to narrower market maker spreads, thereby reducing investors' transaction costs. Third, permitting market makers to quote in size commensurate with their own freely-determined trading interest will enhance the pricing efficiency of the Nasdaq market and the independence and competitiveness of dealers quotations. Fourth, removing quotation size requirements will facilitate greater quote size changes, thereby increasing the information content of market maker quotes by facilitating different quote sizes from dealers who have a substantial interest in the stock at a particular time and those who do not.

Indeed, in its order approving the Actual Size Rule, the Commission noted that it ''preliminarily believes that the proposal will not adversely affect market quality and liquidity''[12] and that it ''believes there are substantial reasons * * * to expect that reducing market makers' proprietary quotation size requirements in light of the shift to a more order-driven market would be beneficial to investors.''[13] In addition, the Commission stated that, ''based on its experience with the markets and discussions with market participants, [it] believes that decreasing the required quote size will not result in a reduction in liquidity that will hurt investors.''[14]

Nevertheless, in light of concerns raised by commentators opposed to the Actual Size Rule regarding the potential adverse impacts of the rule on market

[4] *See* Securities Exchange Act Release No. 37619A (September 56, 1997), 61 FR 48290 (September 12, 1996) (''Order Execution Rules Adopting Release'')

[5] *See, e.g.,* Securities Exchange Act Release No. 38490 (April 9, 1997).

[6] For example, if a market maker's quote in stock ABCD is 10–10¼ (1000 × 1000) and the market maker receives a customer limit order to buy 200 shares at 10⅛, the market maker must update its quote to 10⅛–10¼ (200 × 1000).

[7] For example, if a market maker receives a customer limit order to buy 200 shares of ABCD at 10 when its quote in ABCD is 10–10¼ (1000 × 1000) and the NBBO for ABCD is 10–10⅛, the market maker must update is quote to 10–10¼ (1200 × 1000).

[8] There are eight exceptions to the immediate display requirement of the Limit Order Display Rule: (1) customer limit orders executed upon receipt; (2) limit orders placed by customers who request that they not be displayed; (3) limit orders for odd-lots; (4) limit orders of block size (10,000 shares or $200,000); (5) limit orders routed to a Nasdaq or exchange system for display; (6) limit orders routed to a qualified electronic communications network for display; (7) limit orders routed to another member for display; and (8) limit orders that are all-or-none orders. *See* Rule 11Ac1–4(c).

[9] *See* Securities Exchange Act Release No. 38156 (January 10, 1997), 62 FR 2415 (January 16, 1997) ( order partially approving SR–NASD–96–43 and approving the Actual Size Rule on a pilot basis) (''Actual Size Rule Approval Order'').

[10] Thus, the Actual Size Rule does not effect a market maker's obligation to display the full size of a customer limit order. If a market maker is required to display a customer limit order for 200 or more shares, it must display a quote size of at least 200 shares absent an exception from the Limit Order Display Rule.

[11] In particular, NASD Rule 4613(3)(2) requires each market maker in a Nasdaq issue other than those in the first fifty to enter and maintain two-sided quotations with a minimum size equal or greater than the applicable SOES tier size for the security (e.g., 1000, 500 or 200 shares for Nasdaq National Market issues and 500 or 100 shares for Nasdaq SmallCap Market issues) (''Mandatory Quote Size Requirement'').

[12] *See* Actual Size Approval Order, supra note 8, 62 FR at 2425.

[13] *Id.* 62 FR at 243.

[14] *Id.* 62 FR at 2424.

liquidity and volatility, the Commission originally determined to approve the rule on a three-month pilot basis to afford the Commission and the NASD an opportunity to gain practical experience with the rule and evaluate its effects. The factors identified by the Commission to be considered in this evaluation include, among others, the impact of reduced quotation sizes on liquity, volatility and question spreads.[15]

As detailed below, the NASD has concluded that implementation of the SEC's Order Execution Rules has significantly improved the quality of the Nasdaq market by creating a market structure where customer limit provide liquidity and effectively compete with market maker quotations. In this type of environment, the NASD believes the regulatory necessity for the Mandatory Quote Size Requirements no longer exists. Accordingly, the NASD is proposing to extend the pilot of the Actual Size Rule until July 18, 1997.

2. Economic Analysis of the Actual Size Rule [16]

Research conducted by the NASD's Economic Research Department indicates three general findings concerning implementation of the SEC's Order Execution Rules and the Actual Size Rule: (1) The SEC's Order Execution Rules have dramatically improved the quality of the Nasdaq market, particularly with respect to the size of quoted spreads; (2) among those securities subject to the SEC's Order Execution Rules, there is no appreciable difference in market quality between those securities subject to the Actual Size Rule and those securities subject to Mandatory Quote Size Requirements; [17] and (3) implementation of the Actual Size Rule has not resulted in any significant diminution of the ability of investors to receive automated executions through SOES, SelectNet, or proprietary systems operated by broker-dealers. Accordingly, as the case with 100-share minimum quotation size requirements applicable to exchange specialists in order-driven markets, the NASD believes the Actual Size Rule has not harmed investors or the quality of the Nasdaq market.

While some market participants may maintain that the Actual Size Rule should be abandoned because it has not had a demonstrably positive market impact, the NASD believes that the Rule should be retained because it eliminates an unnecessary regulatory requirement and, moreover, it has not had any adverse market impacts. In particular, with respect to the first fifty securities, the NASD believes that competitive forces in the marketplace, be they the result of displaying customer limit orders or market maker competition for order flow, have driven the Nasdaq market to perform the same as of the artifical 1,000 share minimum quotation size requirement was in place.[18] As a result, given that the market performs the same with or without the Actual Size Rule, the NASD believes it is far preferable for the protection of investors and the efficiency of the capital formation process to promote a regulatory environment for Nasdaq that achieves its results through aggressive competition rather than artificial regulatory fiat. In sum. in light of the performance of the first fifty securities, the NASD believes there is no regulatory basis to justify the retention of artificial quotation size requirements for Nasdaq market makers.

a. Implementation of the SEC's Order Execution Rules Has Resulted in Significant Benefits to Investors and Enhanced the Quality of the Nasdaq Market.

The NASD's analysis of the markets for the first 150 Nasdaq securities subject to the SEC's Order Execution Rules shows that: [19]

- Quoted spreads have narrowed 32.3%; [20] effective spreads have narrowed 24.6%; and actual dollar spreads have narrowed 31.8% [21]
- Average dealer spreads have narrowed 3.8%.
- The amount of time the inside spread was equal to an ⅛ increased 104.9%, meaning that quoted spreads in these securities were equal to their narrowest quote increment 47.8% of the time. In addition, inside spreads were equal to or less than a ¼ 77.1% of the time.
- The average number of market makers per stock increased 5.6%, or 1.1 market makers per stock.
- The maximum quoted depth of any single market maker at the inside bid or offer increased 37.2%.
- There has been a noticeable increase in the number of quotation updates greater than 1,000 shares. In particular, whereas before implementation of the Actual Size Rule market makers virtually never displayed sizes greater than 1,000 shares, since the rule has been in effect, 6.3% of all market maker quote updates have been for greater than 1,000 shares.

b. The Market Behavior of the ''First Forty'' Securities is Very Similar to the Market Behavior of the ''Second Forty'' Securities.

While the data set forth above indicates that implementation of the SEC's Order Execution Rules have been associated with dramatically narrower spreads and improvements in other indicia of market quality, the NASD believes that the similar performance of the second forty securities to the first forty securities indicates that the Actual

[15] *See* 62 FR 2415 at 2425.

[16] *See* 62 FR 2415 at 2425.

[17] The first fifty securities include Nasdaq's top ten issues by dollar volume plus 40 issues chosen from Nasdaq's top 500 issues: 8 ranked between 11 and 1000; 8 ranked between 101 and 200; 8 ranked between 201 and 300; 8 ranked between 301 and 400; 8 ranked between 401 and 500. The second fifty securities include the ten Nasdaq stocks ranked between 11 and 20 by dollar volume plus 40 stocks chosen from Nasdaq's top 500 stocks in the same manner explained above. The ten largest Nasdaq stocks in the first fifty have no comparable peer group among Nasdaq stocks and the next ten largest Nasdaq stocks (i.e., Nasdaq stocks ranked 11–20 in size) included in the second fifty are also not comparable to the ''bottom 40'' within the first fifty stocks and the ''second forty'' stocks are those stocks that are the ''bottom 40'' within the second fifty stocks.

[18] Some market participants may assert that the lack of difference in performance between the first forty securities and the second forty is attributable to the operation of several features of SOES. Specifically, these market participants may claim that the SOES Auto-Refresh Feature, which refreshes a market quote to the applicable SOES tier size once its quote has been completely decremented, along with the ''No Decrementation'' and ''Supplemental Size'' feature of SOES, artificially increase the number of 1000-share quotes in the first fifty securities. The ''No Decrementation'' feature of SOES allows a market maker to provide that its quote shall not be decremented after the execution of SOES orders. To use this feature, a market maker's quote size must be equal to the applicable SOES tier size. The ''Supplemental Size'' feature of SOES allows a market maker to establish a ''supplemental size'' that is used to automatically replenish a market maker's quote once it has been completely decremented. When a market maker's quote is replenished from the supplemental size, it is replenished to 1000 shares. In order to use this feature, a market maker must initially enter a quote size equal to or greater than the applicable SOES tier size. The NASD notes that market maker use of each of these system features is completely voluntary and they are available for all Nasdaq securities. Accordingly, the NASD believes it would be inaccurate to assert that these SOES features have obfuscated the impact of the Actual Size Rule.

[19] Statistics concerning the first 150 Nasdaq securities subject to the Order Execution Rules reflect a comparison of the markets for these securities for the 20 trading days before January 20, 1997 and the 24 trading days after February 24, 1997.

[20] A *quoted spread* is the difference between the inside bid and ask. The individual dollar spreads used to calculate the average for a given stock are weighted by the amount of time each spread was in effect for the day, *i.e.,* the spread's duration.

[21] An *effective spread* is measured by taking the absolute difference between a transaction price and the bid-ask midpoint, multiplied by two. Each effective spread is weighted by the share volume of the associated transaction. An *actual spread* is measured by taking the transaction price minus the bid-ask midpoint for market maker sells, and the bid-ask midpoint minus the transaction price for market maker buys. The figure is multiplied by two to compare the quoted spread, and the average is volume-weighted.

Size Rule did not impair the markets for these securities. In particular, a comparison of the first forty securities and the second forty securities reveals that: [22]

- Dollar quoted spreads decreased 33.8% for the first forty securities and 33.7% for the second forty.
- Effective spreads decreased 26.6% for the first forty securities and 27.4% for the second forty.
- Actual dollar spreads decreased 30.5% for the first forty securities and 33% for the second forty.
- Dealer dollar spreads decreased 7.4% for the first forty securities and 4.9% for the second forty.
- The average number of market makers for the first forty securities increased 4.1% and the average for the second forty increased 2.7%.
- 10% of the quote updates by market makers in the first forty securities were for 100 shares, as compared to 5.7% for the second forty.
- 66.5% of the quote updates by market makers in the first forty securities were for 1,000 shares, as compared to 77.5% for the second forty.
- 6.0% of the quote updates by market makers in the first forty securities were for greater than 1,000 shares, as compared to 6.2% for the second forty.
- By one measure of market liquidity, the amount of transaction volume required to move the bid-ask midpoint (''BAM''),[23] liquidity for both groups of securities appears to have diminished at narrower price movements, but less so for larger price movements.[24] Specifically, the amount of stock needed to move the BAM 1/16 to an 1/8 decreased 26.5% for the first forty securities and 21.3% for the second forty. In addition, the amount of stock needed to move the BAM an 1/8 to a 1/4 decreased 11.7% for the first forty and 4.9% for the second forty. It is interesting to note, however, that the performance of the two groups begins to diverge for larger BAM movements. Specifically, the amount of stock needed to move the BAM 3/8 to a 1/2 increased .2% for the first forty, but decreased 4.5% for the second forty. Similarly, the amount of stock needed to move the BAM greater than a 1/2 increased 6.1% for the first forty, but decreased 1.1% for the second forty.
- By two measures, volatility in the first forty securities has declined since implementation of the Actual Size Rule. However, by two other measures volatility increased.[25] Specifically, for the first forty securities, the percentage change in the range of trade prices decreased 6.6% [26] and the percentage change in the standard deviation of trade prices declined .78%.[27] On the other hand, the percentage change in the range of the BAM increased 3.44% [28] and the percentage change in the standard deviation of the BAM increased 1.7%.[29] In comparison, for the second forty securities, the percentage change in the range of trade prices increased 8.5%; the percentage change in the standard deviation of trade prices increased 18.68%; the percentage change in the range of the BAM increased 24.52%; and the percentage change in the standard deviation of the BAM increased 25.82%. While it may appear that volatility did not increase in the first forty to the same extent that it did for the second forty, once differences in volume between the two groups are controlled or ''normalized,'' these apparent differences in volatility decline significantly.

c. Implementation of the Actual Size Rule Has Not Resulted in Any Diminution in the Ability of Investors To Receive Automated Executions Through SOES, SelectNet, or Other Proprietary Systems Operated by Broker Dealers.

The NASD believes that the following statistics indicate that implementation of the Actual Size Rule has not diminished the ability of small investors to receive automated executions through SOES up to the size of their SOES orders.[30]

- For the top ten Nasdaq stocks, 99% of SOES volume and 99% of SOES trades were executed at one price. Thus, for all but 1% of SOES orders, investors received SOES executions at the price and size they desired. Similarly, for the first forty securities, 98% of SOES volume and 98% of SOES trades received an execution at one price.
- For the top ten Nasdaq stocks, the aggregate depth of all market makers at the inside was less than 1,000 shares 2.7% of the time. Similarly, for the first forty securities, the aggregate depth of all market makers at the inside was less than 1,000 shares 7.85% of the time.
- For the top ten stocks, the aggregate depth of all market makers at the inside was less than 500 shares 1.6% of the time. Similarly, for the first forty securities, the aggregate depth of all market makers at the inside was less than 500 shares 4.3% of the time.

Moreover, SOES volume and SelectNet volume in the first fifty securities indicates that the Actual Size Rule has had no impact on the ability of investors to receive executions through SOES or SelectNet. In fact, as detailed below, volume in both these systems has increased since implementation of the Actual Size Rule.[31]

- The average daily share volume through SOES increased 1.08 million shares a day, or 8.8%.
- The average daily dollar volume through SOES increased $44.53 million a day, or 4.6%.
- The average daily share volume through SelectNet increased 5.29 million shares a day, or 176.8%.

[22] The comparison of the first forty securities and the second forty securities is based on an analysis of the 31 trading days after February 10, 1997.

[23] Under this analysis, volume is summed for each day until the BAM has moved away from the starting BAM (the ''base'') by a specific amount. Once this occurs, the base BAM is reassigned and volume is summed again until the bid-ask midpoint has moved again by the specified amount. For example, consider the calculation of ''Volume Per $.125 to $.25 Movement in the BAM.'' If the bid-ask midpoint is 20 for ABCD security at the beginning of the day, the algorithm will sum volume until the bid-ask midpoint has moved to at least $20.125 but less than $20.25, or at most $19.75 but at least $19.875. If such a movement should occur, the algorithm will note the total volume and use it as one observation in final calculations. Volume is defined as net volume transacted by market makers in a principle capacity with a non-market maker or another market maker acting as agent. All transactions in which two market makers trade as agent or two non-market makers trade are excluded from the calculations. If market makers (in aggregate) are net sellers (buyers) before an increase (decrease) in the BAM, then this occurrence is included in the above analysis. If, however, market makers are net sellers (buyers) before a decrease (increase) in the BAM, then this ''counter-intuitive'' occurrence is excluded from this analysis. ''Counter-intuitive'' cases accounted for about 35% of the total events analyzed.

[24] Because customer limit orders can now affect the inside market under the Display Rule, the NASD believes it would be expected that liquidity would decrease with respect to smaller price movements.

[25] In this connection, it is also important to note that volatility for stocks included in the top 1,000 Nasdaq stocks that were not subject to the Order Handling Rules increased as well. Specifically, the standard deviation of the BAM increased 12.8% for this group of stocks.

[26] *Range of the trade price* measures the range of price movement over a day as a percentage of the day's highest price. The calculation takes the difference between the day's highest transaction price and the day's lowest transaction price, divided by the highest transaction price.

[27] *Standard deviation of price* measures the ''bounce'' in trade price over the course of a day. Technically, it is the standard deviation of the logarithm of prices observed during a given day. The use of logarithms results in a measure that represents the volatility of price relative to the level of price.

[28] *Range of the Bid-Ask Midpoint* is calculated by taking the difference between the day's high value of the bid-ask midpoint minus the low value, divided by the high value.

[29] *Standard deviation of the Bid-Ask Midpoint* measures the ''bounce'' in the bid-ask midpoint over the course of a day. It uses the same calculation as the standard deviation of price, substituting the bid-ask midpoint for trade price.

[30] The statistics concerning SOES accessibility are based on the 20 trading days following February 10, 1997.

[31] The statistics concerning SOES volume and SelectNet volume are based on the 31 trading days following February 10, 1997.

• The average daily dollar volume through SelectNet increased $303.18 million a day, or 140.3%.

Finally, the NASD notes that several NASD members operate their own automated trading systems that guarantee execution of customer orders up to the applicable SOES tier size or greater. The NASD estimates that these systems accommodate a significantly large number of the customer accounts participating in the Nasdaq market. Based on an informal survey of several of these firms, the NASD is aware of no instances where a firm has significantly changed the execution guarantees provided through its automated execution system.

3. Statutory Basis

For the reasons noted above, the NASD believes the proposed rule change is consistent with Sections 11A(a)(1)(C), 15A(b)(6), 15A(b)(9), and 15A(b)(11) of the Exchange Act. Section 11A(a)(1)(C) provides that it is in the public interest to, among other things, assure the economically efficient execution of securities transactions and the availability to brokers, dealers, and investors of information with respect to quotations for and transactions in securities. Section 15A(b)(6) requires that the rules of a national securities association be designed to prevent fraudulent and manipulative acts and practices, to promote just and equitable principles of trade, to foster cooperation and coordination with persons engaged in regulating, clearing, settling, processing information with respect to, and facilitating transactions in securities, to remove impediments to and perfect the mechanism of a free and open market and a national market system and in general to protect investors and the public interest. Section 15A(b)(9) requires that rules of an Association not impose any burden on competition not necessary or appropriate in furtherance of the purposes of the Exchange Act. Section 15A(b)(11) requires the NASD to, among other things, formulate rules designed to produce fair and informative quotations.

*B. Self-Regulatory Organization's Statement on Burden on Competition*

The NASD believes that the proposed rule change will not result in any burden on competition that is not necessary or appropriate in furtherance of the purposes of the Exchange Act.

*C. Self-Regulatory Organization's Statement on Comments on the Proposed Rule Change Received From Members, Participants, or Others*

Comments were neither solicited nor received.

**III. Solicitation of Comments**

Interested persons are invited to submit written data, views, and arguments concerning the foregoing. Persons making written submissions should file six copies thereof with the Secretary, Securities and Exchange Commission, 450 Fifth Street, N.W., Washington, D.C. 20549. Copies of the submission, all subsequent amendments, all written statements with respect to the proposed rule change that are filed with the Commission, and all written communications relating to the proposed rule change between the Commission and any person, other than those that may be withheld from the public in accordance with the provisions of 5 U.S.C. 552, will be available for inspection and copying in the Commission's Public Reference Room. Copies of such filing will also be available for inspection and copying at the principal office of the NASD. All submissions should refer to the file number in the caption above and should be submitted by May 12, 1997.

**IV. Commission's Findings and Order Granting Accelerated Approval of the Proposed Rule Change**

The Commission finds that the NASD's proposal is consistent with the Act and the rules and regulations thereunder applicable to a national securities association. Specifically, the Commission finds that the proposed rule change is consistent with Section 15A(b)(9) in that it permits Nasdaq market makers to quote in 100 share increments for an additional three months in a manner equivalent to exchange specialists. This has not resulted in significant reductions in Nasdaq market quality to date. In addition, consistent with Section 15A(b)(11), the Actual Size Rule is designed to produce accurate and informative quotations that disclose the true trading interest of the market maker.

The Commission approved the Actual Size Rule on a three-month pilot basis so that the effects of the rule could be assessed. The Commission continues to believe that a reduction in the quotation size requirement reduces the risks that market makers must take, and should encourage them to maintain competitive prices even in the changing market conditions resulting from the Order Execution Rules. Although the economic analysis from the NASD has not indicated any notable detrimental effects, the Commission believes that the proposed rule change will benefit the markets by providing more experience with the rule before a decision is made regarding permanent approval. Accordingly, the Commission believes that the pilot should be extended beyond the April 18, 1997 expiration date. The Commission, therefore, finds good cause for approving the proposed rule change prior to the thirtieth day after the date of publication of notice of filing thereof in the **Federal Register**.

The Commission requests that the NASD continue to evaluate the effects of the reduction in the minimum quotation size for those Nasdaq stocks included in the pilot.

Specifically, the NASD should continue its analysis of: (1) The number of market makers in each of the 50 securities, and any change in the number over time; (2) the average aggregate dealer and inside spread by stock over time; (3) the average spread for each market maker by stock; (4) the average depth by market maker (including limit orders), and any change in the depth over time; (5) the fraction of volume executed by a market maker who is at the inside quote per stock; and (6) a measure of volume required to move the price of each security one increment (to determine the overall liquidity and volatility in the market for each stock).

It is *therefore ordered*, pursuant to Section 19(b)(2) of the Exchange Act,[32] that the proposed rule change, SR–NASD–97–25, be and hereby is approved.

For the Commission, by the Division of Market Regulation, pursuant to delegated authority.[33]

**Margaret H. McFarland,**

*Deputy Secretary.*

[FR Doc. 97–10222 Filed 4–18–97; 8:45 am]

BILLING CODE 8010–01–M

[32] 15 U.S.C. § 78s(b)(2) (1988).

[33] 17 CFR 200.30–3(a)(12) (1989).

## SECURITIES AND EXCHANGE COMMISSION

**[Release No. 34–38506; File No. SR–NASD–95–63]**

## Self-Regulatory Organizations; Notice of Filing of Amendment No. 4 to Proposed Rule Change by National Association of Securities Dealers, Inc. Relating to Proposed Rule Governing Broker/Dealers Operating on the Premises of Financial Institutions

April 14, 1997.

Pursuant to Section 19(b)(1) of the Securities Exchange Act of 1934 (''Act''), 15 U.S.C. 78s(b)(1), notice is hereby given that on March 25, 1997, NASD Regulation, Inc. (''NASD Regulation'') filed with the Securities and Exchange Commission (''SEC'' or ''Commission'') Amendment No. 4 [1] to the proposed rule change as described in Items I, II, and III below, which Items have been prepared by NASD Regulation. The Commission is publishing this notice to solicit comments on the proposed rule change from interested persons.

### I. Self-Regulatory Organization's Statement of the Terms of Substance of the Proposed Rule Change

NASD Regulation is proposing to amend the proposed rule change filed in SR–NASD–95–63. Below is the amended text of the proposed rule change. Proposed new language is in italics; proposed deletions are in brackets.

**Conduct Rules**

2350. Broker/Dealer Conduct on the Premises of Financial Institutions

(a) Applicability

This section shall apply exclusively to those broker/dealer services conducted by members on the premises of a financial institution where retail deposits are taken. This section does not alter or abrogate members' obligations to comply with other applicable NASD rules, regulations, and requirements, nor those of other regulatory authorities that may govern members operating on the premises of financial institutions.

(b) Definitions

(1) For purposes of this section, the term ''financial institution'' shall mean federal and state-chartered banks, savings and loan associations, savings banks, credit unions, and the service corporations *of such institutions* required by law [of such institutions].

(2) ''Networking arrangement'' and ''brokerage affiliate arrangement'' shall mean a contractual arrangement between a member and a financial institution pursuant to which the member conducts broker/dealer services for customers of the financial institution and the general public on the premises of such financial institution where retail deposits are taken.

(3) ''Affiliate'' shall mean a company [which] *that* controls, is controlled by or is under common control with a member as defined in [Schedule E of the By-Laws] *Rule 2720.*

(4) ''Broker/dealer services'' shall mean the investment banking or securities business as defined in [Paragraph] *paragraph* (1) of Article I of the By-Laws.

[(5) ''Confidential financial information'' shall not include: (A) customers' names, addresses, and telephone numbers, unless a customer specifies otherwise; or (B) information that can be obtained from unaffiliated credit bureaus or similar companies in the ordinary course of business.]

(c) Standards for Member Conduct

No member shall conduct broker/dealer services on the premises of a financial institution *where retail deposits are taken* unless the member complies initially and continuously with the following requirements:

(1) Setting

Wherever [possible] *practical,* the member's broker/dealer services shall be conducted in a physical location distinct from the area [where] *in which* the financial institution's retail deposits are taken. In all situations, members shall identify the member's broker/dealer services in a manner that is clearly distinguished from the financial institution's retail deposit-taking activities. The member's name shall be clearly displayed in the area in which the member conducts its broker/dealer services.

(2) Networking and Brokerage Affiliate Agreements

Networking and brokerage affiliate arrangements between a member and a financial institution must be governed by a written agreement that sets forth the responsibilities of the parties and the compensation arrangements. The member must ensure *that* the agreement stipulates that [: (A)] supervisory personnel of the member and representatives of the Securities and Exchange Commission and the Association will be permitted access to the financial institution's premises where the member conducts broker/dealer services in order to inspect the books and records and other relevant information maintained by the member with respect to its broker/dealer services [;].

[(B) unregistered employees of the financial institution will not receive any compensation, cash or non-cash, that is conditioned or whether a referral of a customer of the financial institution to the member results in a transaction; and

(C) the member will notify the financial institution if any associated person of the member who is employed by the financial institution is terminated for cause by the member.]

[(3) Compensation of Registered/Unregistered Persons

The member shall not provide cash or non-cash compensation to employees of the financial institution who are not registered with an NASD member in connection with, but not limited to, locating, introducing, or referring customers of the financial institution to the member.]

[(4)]*(3)* Customer Disclosure and Written Acknowledgment

[(A) When] *At or prior to the time that* a customer account is open by a [broker/dealer] *member* on the premises of a financial institution where retail deposits are taken, the member shall*:*

*(A)* disclose, orally and in writing, that the securities products purchased or sold in a transaction with the member:

(i) are not insured by the Federal Deposit Insurance Corporation (''FDIC'') or other [applicable] deposit insurance;

(ii) are not deposits or other obligations of the financial institution and are not guaranteed by the financial institution; and

(iii) are subject to investment risks, including possible loss of the principal invested*; and* [.]

[(B) For all accounts opened by a broker/dealer on the premises of a financial institution where retail deposits are taken, the member shall]

*(B)* make reasonable efforts to obtain from each customer during the account opening process a written acknowledgment of the disclosures required by [Subsections (c)(4)(i) through (iii)] *paragraph (c)(3)(A).*

[(6)] *(4)* Communications with the Public

(A) All members [communications regarding customers' securities transactions and long and short positions, including] confirmations and account statements[,] must indicate

[1] The Commission previously published a Notice of NASD's proposed rule change in this matter and three amendments thereto. *See* Securities Exchange Act Release No. 36980 (March 15, 1996), 61 FR 11913 (March 22, 1996).

clearly that the broker/dealer services are provided by the member. [Communications that include information regarding nondeposit-insured transactions and positions with the member and deposit-insured transactions and positions or accounts with the]

*(B) Advertisements and other promotional and sales material that announce the location of a* financial institution [should clearly distinguish between the two. Securities transactions conducted by the member should be introduced with the member's identity and, at a minimum, the member] *where broker/dealer services are provided by the member, or that are distributed by the member on the premises of a financial institution,* must disclose that securities products: are not insured by the FDIC or other applicable deposit insurance; are not deposits or other obligations of the financial institution and are not guaranteed by the financial institution; *and* are subject to investment risks, including possible loss of the principal invested. *The shorter, logo format described in paragraph (c)(4)(C) may be used to provide these disclosures.* [Advertisements, sales literature, and other similar materials issued by the member that related exclusively to its broker/dealer services will be deemed to be the materials of the member and must indicate prominently the identity of the member providing the broker/dealer services. The financial institution may be referenced in a non-prominent manner in advertising or promotional materials for the purposes of identifying the location where broker/dealer services are available and, where appropriate, to disclose a material relationship between the member and the financial institution, for example, where the member is affiliated with a financial institution that serves as investment adviser to an open-end investment company (''mutual fund'').]

*(C) The following shorter, logo format disclosures may be used by members in visual media, such as television broadcasts, Automated Teller Machine (''ATM'') screens, billboards, signs, posters, and in written advertisements and promotional materials, such as brochures, to comply with the requirements of paragraph (c)(4)(B), provided that such disclosures are displayed in a conspicuous manner:*

- *Not FDIC Insured*
- *No Bank Guarantee*
- *May Lose Value*

[Advertisements, sales literature, and other similar materials jointly issued by the member and a financial institution that discuss services or products offered by both entities must distinguish clearly the products and services offered from those offered by the member. The name of the member must be displayed prominently in the section of the materials that describes the broker/dealer services offered by the member, which section will be deemed materials of the member.]

*(D) As long as the omission of the disclosures required by paragraph (c)(4)(B) would not cause the advertisement or sales literature to be misleading in light of the context in which the material is presented, such disclosures are not required with respect to messages contained in:*

- *radio broadcasts of 30 seconds or less;*
- *electronic signs, including billboard and similar signs, but excluding messages contained on television, on-line computer services, or ATMs; and*
- *signs, such as banners and posters, when used only as location indicators.*

*(5) Notifications of Terminations*

*The member must promptly notify the financial institution if any associated person of the member who is employed by the financial institution is terminated for cause by the member.*

## II. Procedures of the Self-Regulatory Organization

The Board of Directors (''Board'') of NASD Regulation approved the revisions to the proposed rule change at its meeting on January 27, 1997 and authorized the filing of the rule change with the SEC. The Nasdaq Stock Market, Inc. has been provided an opportunity to consult with respect to the proposed rule change, pursuant to the Plan of Allocation and Delegation of Functions by NASD to Subsidiaries. The NASD Board of Governors reviewed the proposed rule change at its meeting on January 28, 1997. No other action by the NASD is necessary for the filing of the proposed rule change. Section 1(a)(2) to Article VII of the NASD By-Laws permits the NASD Board of Governors to amend the NASD Conduct Rules without recourse to the membership for approval.

## III. Self-Regulatory Organization's Statement of the Purpose of, and Statutory Basis for, the Proposed Rule Change

*(a) Purpose*

(i) Background

On December 28, 1995, the NASD filed the original proposed rule change with the SEC. The filing subsequently was amended on January 24, January 29, and March 7, 1996.[2] The Commission received 98 comments in response to the proposed rule change.[3] About one-third of the comment letters expressed support for the proposal. While a few commenters supported the proposal as published, most were generally supportive of the proposal's goals but suggested modifications to the proposed rule. More than half of the commenters opposed some or all of the provisions of the proposal. This amendment responds to public comments received.

(ii) Major Revisions to Proposed rule

The major revisions to the original proposed rule change filed with the SEC include the following:

*Setting.* The setting provision has been revised to make the rule more consistent with the standards imposed by the Interagency Statement on Retail Sales of Nondeposit Investment Products (''Interagency Statement'') issued by the banking regulators on February 15, 1994.

*Confidential Financial Information and Compensation of Unregistered Persons.* These provisions have been deleted from the proposed rule, and comment is being separately solicited on proposed rules governing the use and release of confidential financial information and regulating the payment of referral fees that would apply to all members.

*Communications with the Public.* This provision has been revised to make the rule more consistent with the Interagency Statement and a September 12, 1995 interpretation of the Interagency Statement (''1995 Interpretation'') and to eliminate requirements that duplicated existing NASD rules.

*Termination for Cause.* The proposed rule as filed with the SEC specified that networking and brokerage affiliate agreements must contain a provision requiring a member to notify a financial institution if a dual employee of the member and the financial institution is terminated for cause by the member. This provision has been made into a separate affirmative requirement.

(iii) Description of Proposed Amendments and Other Responses to Comments

*Applicability [Paragraph (a)].* Many of the 17 commenters on this provision have requested clarification of the rule's applicability to brokerage services provided ''on the premises of a financial

[2] *See,* note 1, *supra.*

[3] These comment letters are available for copying and inspection at the Commission's Public Reference Room and at the principal office of the NASD.

institution where retail deposits are taken.'' Commenters believe the rule should not apply to telecommunications with customers when a customer uses a telephone or a computer terminal on the premises of the bank to contact a broker/dealer that is not present on the premises on the ground that, in their view, there is no chance for customer confusion. In response, the staff plans to issue a Notice to Members in a Question and Answer (''Q&A'') format after the rule is approved, clarifying this and other interpretive questions about how the rule will be applied. The Q&A will clarify that the applicability of the proposed rule is limited to situations where the account is opened either in person, over the telephone, or through any other electronic medium on the premises of a financial institution where retail deposits are taken by a broker/dealer that has a physical presence on the premises.

*Definitions [Paragraph (b)].* Because the provision governing a member's use of confidential financial information has been deleted (*see* discussion below), the definition of ''confidential financial information'' has been deleted.

*Standards for Member Conduct [Paragraph (c)].* Two commenters suggested the addition of language to this paragraph, which contains introductory language to the specific requirements of the proposed rule, to clarify that the rule is applicable to broker/dealer operations conducted on the premises ''where retail deposits are taken.'' This revision has been made.

*Setting [Paragraph (c)(1)].* This provision as proposed specifies certain requirements, including physical separation, designed to reduce customer confusion between deposit taking and securities activities. The overwhelming majority of the 41 commenters that addressed this provision, including the American Bankers Association (''ABA''),[4] Association of Financial Services Holding Companies (''AFSHC''),[5] Bank Securities Association (''BSA''),[6] Consumer Bankers Association (''CBA''),[7] and NationsBank,[8] criticized language in the commentary section of the proposed rule that indicated that there may be certain business settings where the member may not be able to comply with the rule and may, therefore, be prevented from conducting business in such a location. These commenters indicated that this position conflicts with the Interagency Statement. They have requested a clarification that this provision would not prohibit members from conducting a brokerage business in one-person branches, in walkup windows, kiosks, or desks in public places such as supermarkets, as long as adequate safeguards are adopted, including adequate disclosure and signage. One of the commenters, The Bankers Roundtable (''BR''),[9] requested that this provision be deleted. Commenters also have requested guidance as to the degree of physical separation that is necessary to comply with this provision, and several, including First Union Corporation (''First Union''),[10] have suggested that ''wherever possible'' should be changed to ''wherever practicable.'' One commenter, the Center for Study of Responsive Law,[11] which favors the provision, believes more specific language should be used, and that broker/dealer and financial institution services should be segregated.

In response, ''wherever possible'' has been changed to ''wherever practical'' to clarify that the proposed rule imposes the same standards on broker/dealers as are imposed on financial institutions by the Interagency Statement and requires only that sales of non-deposit products should be conducted in a physically distinct location *wherever practical.* Where a physically distinct location is not practical because, for example, joint services are provided in a kiosk location, the broker/dealer would not be prohibited from conducting business in this manner. However, the location must be identified in a manner that clearly distinguishes the broker/dealer services from the activities of the financial institution, and the member's name must be clearly displayed in the area in which the member conducts its broker/dealer services.

*Networking and Brokerage Affiliate Agreements [Paragraph (c)(2)].* Former paragraph (c)(2)(B) required that networking and brokerage affiliate agreements between a member and a financial institution stipulate that transaction-related cash or non-cash compensation to unregistered financial institution employees for referrals is prohibited. Many of the 11 commenters on this provision maintained this provision would result in exerting NASD jurisdiction over the compensation practices of financial institutions. In response, Paragraph (c)(2)(B) has been deleted (*see* discussion below). In addition, the requirement on the part of members to notify financial institutions of the termination of dual employees has been deleted from Paragraph (c)(2) and added as new paragraph (c)(5), in order to emphasize the importance of this provision.

*Compensation of Registered/Unregistered Persons [former Paragraph (c)(3)].* This provision stipulates that members may not provide cash or non-cash compensation to employees of the financial institution in connection with referring customers of the financial institution to the member. Strenuous opposition has been expressed by many of the 65 commenters who addressed this provision, including the ABA, BSA, BR, Office of the Comptroller of the Currency (''OCC''),[12] CBA, Federal Deposit Insurance Corporation (''FDIC''),[13] Independent Bankers Association of America (''IBAA''),[14] and Securities Industry Association (''SIA'').[15]

In particular, these commenters were concerned with language in the rule filing accompanying the proposed rule stating that a NASD member may not do indirectly what it is prohibited from doing directly, i.e., an NASD member may not compensate employees of a financial institution for referrals through payments directed in the first instance to a financial institution. Commenters were particularly concerned that this provision should be clarified to ensure that the NASD is not attempting to regulate a financial institution's compensation practices with respect to its own employees, a practice that is subject to regulation by bank regulators.

Moreover, some commenters, including BSA and the Investment

[4] *See* letter from Sarah A. Miller, American Bankers Association, to Jonathan G. Katz, SEC, dated May 21, 1996.

[5] *See* letter from Patrick A. Forte, Association of Financial Services Holding Companies, to Jonathan G. Katz, SEC, dated May 21, 1996.

[6] *See* letter from Robert M. Kurucza, Bank Securities Association, to Jonathan G. Katz, SEC, dated May 21, 1996.

[7] *See* letter from Marcia Z. Sullivan and Steven I. Zeisel, Consumer Bankers Association, to Jonathan G. Katz, SEC, dated May 21, 1996.

[8] *See* letter from Paul J. Polking, NationsBank, to Jonathan G. Katz, SEC, dated May 20, 1996.

[9] *See* letter from Richard Whiting, The Bankers Roundtable, to Jonathan G. Katz, SEC, dated May 21, 1996.

[10] *See* letter from David A. Hebner, First Union Corporation, to Jonathan G. Katz, SEC, dated May 20, 1996.

[11] *See* letter from Janice C. Shields, Center for Study of Responsive Law, to Jonathan G. Katz, SEC, dated May 15, 1996.

[12] *See* letter from Douglas E. Harris, Comptroller of the Currency, to Jonathan G. Katz, SEC, dated May 21, 1996.

[13] *See* letter from Nicholas J. Ketcha Jr., Federal Deposit Insurance Corporation, to Jonathan G. Katz, SEC, dated July 30, 1996.

[14] *See* letter from Leland M. Stenehjem, Jr., James R. Lauffer, and William W. Reid, Jr., Independent Bankers Association of America, to Jonathan G. Katz, SEC, dated May 21, 1996.

[15] *See* letter from Brewster Ellis, Securities Industry Association, to Jonathan G. Katz, SEC, dated May 22, 1996.

Company Institute (''ICI''),[16] maintain that prohibiting such referral payments would create a competitive disadvantage for broker/dealers operating on the premises of a financial institution because they believe that members operating independent of financial institution premises are entitled to greater flexibility in providing *de minimis* payments to unregistered persons under existing SEC no-action letters. Commenters also have advised that the restriction in the proposed rule on the payment of referral fees is inconsistent with the one-time nominal fee that may be paid to unregistered financial institution employees pursuant to the guidelines set forth in the Interagency Statement and a November 23, 1993 SEC No-Action Letter,[17] provided the fee is not tied to the successful sale of securities. Finally, one commenter, the North American Securities Administration Association (''NASAA''),[18] expressed an opinion that the NASD should prohibit all referral fees.

In response, Paragraph (c)(3) has been deleted, and the NASD Regulation Board has approved the solicitation of comment on a proposed rule governing compensation of unregistered persons that would apply to all members.[19] This proposal would clarify existing policy and would respond to concerns that the policy would otherwise appear to be applied differentially to different classes of members.

*Customer Disclosure and Written Acknowledgment [Paragraph (c)(4)].* This provision specifies the disclosures a member must make when a customer opens an account, and also requires members to make reasonable efforts to obtain a written acknowledgment of the required disclosures during the account-opening process. Many of the 17 commenters on this provision have asked the NASD to consider allowing the use of abbreviated disclosures allowed by the federal banking agencies under a September 12, 1995 interpretation of the Interagency Statement (''1995 Interpretation'') under appropriate circumstances. Other commenters have argued that NASD-required disclosure and the disclosure required by banking regulators (as reflected in the Interagency Statement) should be the same. One commenter has argued that the NASD should regulate all members equally and should require all members to provide risk disclosure, while two other commenters believe that further disclosure should be required, including disclosure of any fees and compensation relating to a transaction.

The Interagency Statement requires the longer, written disclosures contained in the proposed rule when an account is opened. Accordingly, this provision has not been revised, since as currently drafted it is consistent with banking regulator requirements. However, in order to ensure that the proposed rule is consistent with the 1995 Interpretation, a new Paragraph (c)(4)(C) has been added to permit the use of abbreviated disclosures under limited circumstances (*see* discussion below). In addition, the NASD Regulation Board has approved the issuance of an interpretive Notice to Members reminding member firms of their risk disclosure obligations in connection with the sale of insured products and uninsured securities products under existing NASD rules and soliciting comment on whether a new rule, prescribing point-of-sale disclosure in specified circumstances, should be adopted.[20]

*Use of Confidential Financial Information [former Paragraph (c)(5)].* This provision states that an NASD member shall not use confidential financial information provided by the financial institution regarding its customer unless prior written approval has been granted to the financial institution by the customer to release the information. Most of the 84 commenters who addressed this provision expressed significant objections to the proposed restriction on the use of confidential financial information, stating that this provision should either be deleted or substantially revised. Those opposed to this provision include the ABA, AFSHC, BSA, BR, OCC, CBA, IBAA, ICI, SIA, and the major bank commenters, including Chase Manhattan Bank,[21] Chemical Bank,[22] First Union, and NationsBank. Most of these commenters are of the opinion that, to the extent there are special concerns when a bank provides confidential financial information, the concerns are properly the subject of federal and state banking and privacy laws, and the NASD has no jurisdiction to regulate a financial institution's use of customer information.

The commenters also believe that a member should be able to use such information, provided proper disclosure is made and consent has been obtained in accordance with applicable law, which the commenters state does not require written consent. Commenters believe that, alternatively, a member should be able to rely on a representation by the financial institution that customer consent was obtained. Further, the commenters state that it would be an operational burden to comply with this provision, citing as examples the difficulty of obtaining consent from both existing and future customers, the impracticality of requiring a person employed by both a broker/dealer and a bank to obtain verification of a customer's consent before using confidential financial information inadvertently obtained in the regular course of business, additional record-keeping requirements, and the costs of redesigning database systems that were built in compliance with existing laws and that now aggregate financial information for use by integrated firms. Also, many commenters believe that customers expect and welcome this sharing of information.

As with other provisions of the proposed rule, commenters stated that this provision is discriminatory and anti-competitive, noting that restrictions regarding the use of confidential financial information are not applied similarly to broker/dealers who are not operating on the premises of a financial institution. In this regard, commenters are of the opinion that there is no public policy reason why customer information possessed by affiliates or broker/dealers that are not operating on the premises of a financial institution that include, for example, information regarding real estate holdings, consumer finance loans, insurance, or other financial matters, should be treated differently than customer information provided by a financial institution. Commenters also believe that any rule adopted the NASD to regulate the use of confidential information should apply to all members. Commenters further state that this provision has no relationship to one of the major stated purposes of the proposed rule: the prevention of customer confusion. Further, if the purpose of this provision is to prevent customer abuse of a sales practice nature, they believe that existing NASD suitability, cold-calling, and disclosure rules address this concern.

[16] *See* letter from Paul Schott Stevens, Investment Company Institute, to Jonathan G. Katz, SEC, dated May 21, 1996.

[17] Chubb Securities Corporation, SEC No-Action Letter (November 23, 1993).

[18] *See* letter from Dee Riddell Harris, North American Securities Administrators Association, Inc., to Jonathan G. Katz, SEC, dated May 21, 1996.

[19] *See* NASD Notice to Members 97–11 (March 1997).

[20] This Notice will appear in a future issue of NASD Notices to Members and will also be available on NASD Regulation's Web Site.

[21] *See* letter from Jay No. Soloway, The Chase Manhattan Bank, to Jonathan G. Katz, SEC, dated May 20, 1996.

[22] *See* letter from Jay N. Soloway, Chemical Bank, to Jonathan G. Katz, SEC, dated May 20, 1996.

Finally, because Congress was considering the sharing of customer information between financial institutions and their affiliates and subsidiaries at the time the rule was proposed for comment, some commenters believed that the NASD should refrain from issuing guidelines on privacy until Congress has had an opportunity to develop a federal policy on the issue. Two commenters, NASAA and the Consumer Federation of America,[23] expressed support for this provision.

Since the close of the comment period, some provisions of the legislation discussed by the commenters have been adopted. In particular, the recently-enacted amendments to the Fair Credit Reporting Act (''FCRA''), 15 U.S.C. Section 1681 *et seq.*, address the use and release of confidential financial information. The FCRA regulates the consumer reporting industry by imposing certain restrictions and requirements on consumer reporting agencies. Any entity, including a broker/dealer, that accumulates and disseminates certain consumer information may be subject to the FCRA. In particular, an entity that provides so-called ''non-experience information'' (e.g., information contained in credit applications or reports from credit bureaus, demographic firms, or other third parties) to a non-affiliate could be considered a consumer reporting agency and might be required to comply with FCRA requirements. On the other hand, an entity may share without limitation ''experience information'' (i.e., information derived from transactions or experiences with the consumer) with both affiliates and non-affiliates without becoming subject to the FCRA. In addition, as a result of the recent amendment to the FCRA, members of the same corporate family now may share non-experience consumer information without becoming subject to FCRA requirements. In particular, the amendments allow affiliates to share non-experience information, either directly or through a central database, so long as it is clearly and conspicuously disclosed to the consumer that information may be shared among the affiliates, and the consumer is given the opportunity, before the information is initially communicated, to opt out of the sharing arrangement.

The provision in the proposed rule regarding confidential information was not intended to regulate a financial institution's use of customer information. Rather, the proposal was intended to limit the use NASD members could make of confidential financial information. In addition, NASD Regulation is sensitive to concerns that this provision as proposed could have a differential impact on members with financial institution affiliates and those without such affiliates that is not justified by differences in business practices. Consequently, this provision has been deleted, and the NASD Regulation Board has approved the issuance of a Notice to Members soliciting comment on a rule governing the use and release of confidential financial information that would apply to all members.[24]

The proposed rule discussed in the Notice to Members would apply to the sharing of information pertaining to natural persons. In particular, before a member may share confidential information with parties other than business affiliates, the member would have to (i) provide to the customer notice that the information may be released and (ii) obtain from the customer his or her affirmative written consent. This restriction would not apply to the release of information pursuant to regulatory, self-regulatory, or court process. In addition, before a member may release confidential information to a business affiliate, the member would have to provide to the customer (i) notice that the information may be released and (ii) a reasonable opportunity to object to the sharing of the information before it occurs. Similarly, information that is provided by a business affiliate may not be used unless the member follows this same procedure or determines that the business affiliate has done so.

*Communications with the Public [Paragraph (c)(4)].* This provision sets forth requirements for all communications with customers, including account statements, advertisements, and sales literature. Several of the 30 commenters who addressed this provision have asked that the risk disclosure requirement in former Paragraph (c)(6)(A) be modified or deleted based on their belief that disclosure at the time the account is opened or in solicitations is sufficient to achieve the purpose of the provision. Commenters also have asked whether such disclosure may be provided in the abbreviated format allowed by the 1995 Interpretation to the Interagency Statement. Several commenters also stated that the provision in redundant and duplicative of existing NASD rules, and that all members should be subject to the same disclosure rules.

Paragraphs (B) and (C) of former Paragraph (c)(6) have been deleted in response to these comments and to prevent duplication of existing NASD advertising rules. Also, several new provisions have been added to new Paragraph (c)(4), clarifying the circumstances under which abbreviated risk disclosures may be used and when such disclosures are not required.

*(b) Statutory Basis*

NASD Regulations believes that the amendment to the proposed rule change is consistent with the provisions of Section 15A(b)(6) of the Act,[25] which requires, among other things, that the Association's rules must be designed to promote just and equitable principles of trade, prevent fraudulent and manipulative acts and practices, and protect investors and the public interest. The NASD believes that regulating the conduct of broker/dealers conducting business on the premises of financial institutions will alleviate customer confusion in dealing with such entities and provide a regulatory framework for regulating such broker/dealer activities with the result that investors will be able to make more informed investment decisions with a better understanding of the distinctions between the securities industry and other segments of the financial services industry, in furtherance of the requirement.

*(B) Self-Regulatory Organization's Statement on Burden on Competition*

NASD Regulation does not believe that the proposed rule change will result in any burden on competition that is not necessary or appropriate in furtherance of the purposes of the Act, as amended.

*(C) Self-Regulatory Organization's Statement on Comments on the Proposed Rule Change Received From Members, Participants, or Others*

Written comments were neither solicited nor received regarding Amendment No. 4 to the proposed rule change.

## IV. Date of Effectiveness of the Proposed Rule Change and Timing for Commission Action

Within 35 days of the date of publication of this notice in the **Federal Register** or within such longer period (i) as the Commission may designate up to 90 days of such date if it finds such longer period to be appropriate and

[23] *See* letter from Barbara Roper, Consumer Federation of America; Mary Griffin, Consumers Union; Gerri Detweiler, National Council of Individual Investor; and Edmund Mierzwinski, U.S. Public Interest Research Group to Jonathan G. Katz, SEC, dated August 9, 1996.

[24] *See* NASD Notice to Members 97–12 (March 1997).

[25] 15 U.S.C. 78*o*–3.

publishes its reasons for so finding or (ii) as to which the self-regulatory organization consents, the Commission will:

A. By order approve such proposed rule change, or

B. Institute proceedings to determine whether the proposed rule change should be disapproved.

**V. Solicitation of Comments**

Interested persons are invited to submit written data, views, and arguments concerning the foregoing. Persons making written submissions should file six copies thereof with the Secretary, Securities and Exchange Commission, 450 Fifth Street, N.W., Washington, D.C. 20549. Copies of the submission, all subsequent amendments, all written statements with respect to the proposed rule change that are filed with the Commission, and all written communications relating to the proposed rule change between the Commission and any person, other than those that may be withheld from the public in accordance with the provisions of 5 U.S.C. 552, will be available for inspection and copying in the Commission's Public Reference Room. Copies of such filing will also be available for inspection and copying at the principal office of the NASD. All submissions should refer to the file number in the caption above and should be submitted by May 12, 1997.

For the Commission, by the Division of Market Regulation, pursuant to delegated authority.[26]

**Margaret H. McFarland,**

*Deputy Secretary.*

[FR Doc. 97–10223 Filed 4–18–97; 8:45 am]

BILLING CODE 8010–01–M

[26] 17 CFR 200.30–3(a)(12).

## SECURITIES AND EXCHANGE COMMISSION

**[Release No. 34–38507; File No. SR–PHLX–97–13]**

## Self-Regulatory Organizations; Notice of Filing of Proposed Rule Change by the Philadelphia Stock Exchange, Inc. To Amend the Exchange's Rule Concerning the Pre-Opening Application of the Intermarket Trading System

April 14, 1997.

Pursuant to Section 19(b)(1) of the Securities Exchange Act of 1934 (''Act''), 15 U.S.C. 78s(b)(1), notice is hereby given that on March 19, 1997, the Philadelphia Stock Exchange, Inc. (''PHLX'' or ''Exchange'') filed with the Securities and Exchange Commission (''Commission'') the proposed rule change as described in Items I, II, and III below, which Items have been prepared by the self-regulatory organization. The Commission is publishing this notice to solicit comments on the proposed rule change from interested persons.[1]

**I. Self-Regulatory Organization's Statement of the Terms of Substance of the Proposed Rule Change**

The PHLX proposes to amend Phlx Rule 2001, Intermarket Trading System (''ITS''), to enhance the operation of the Pre-Opening Application by effectively including circuit breakers as a trading halt situation that will trigger the Pre-Opening Application. The proposed rule change will also reorganize and update Rule 2001 to make it conform more closely to the Pre-Opening Application rules of other exchanges and to the model Pre-Opening Application Rule attached as Exhibit A to the ITS Plan.[2]

**II. Self-Regulatory Organization's Statement of the Purpose of, and Statutory Basis for, the Proposed Rule Change**

In its filing with the Commission, the PHLX included statements concerning the purpose of and basis for the proposed rule change and discussed any comments it received on the proposed rule change. The text of these statements may be examined at the places specified in Item IV below. The PHLX has prepared summaries, set forth in Sections A, B, and C below, of the most significant aspects of such statements.

[1] The Commission notes that the other ITS Participants (the American Stock Exchange, Boston Stock Exchange, Chicago Board Options Exchange, Chicago Stock Exchange, Cincinnati Stock Exchange, National Association of Securities Dealers, New York Stock Exchange, Pacific Stock Exchange) have filed essentially the same proposals to amend each of their rules concerning the Pre-Opening Application. *See* Securities Exchange Act Release Nos. 38285 (February 13, 1997), 62 FR 8065 (February 21, 1997) and 38393 (March 12, 1997), 62 FR 13201 (March 19, 1997).

[2] The Commission notes that PHLX's Rule 2001 is incomplete in that it does not contain all the sections of the Pre-Opening Application that the other exchange's Pre-Opening Application rules and the ITS Plan model Pre-Opening Application rule possess. The PHLX must file to amend Rule 2001 in order to further conform Rule 2001 to the Pre-Opening Application rules of other exchanges and to the ITS Plan model Pre-Opening Application rules to the extent that Rule 2001 does not contain relevant sections.

*A. Self-Regulatory Organization's Statement of the Purpose of, and Statutory Basis for, the Proposed Rule Change*

1. Purpose

The purpose of the proposed rule change is to enhance the operation of the Pre-Opening Application under PHLX's Rule 2001. Rule 2001 contains basic definitions pertaining to ITS, prescribes the types of transactions that may be effected through ITS and the pricing of commitments to trade, and specifies the procedures pertaining to the operation of the Pre-Opening Application, whereby an Exchange specialist who wishes to open a market in an ITS stock may obtain any pre-opening interest in that stock by other market-makers registered in that stock in other Participant markets.

PHLX's current Pre-Opening Application prescribes that if an Exchange specialist anticipates that the opening transaction on the Exchange will be at a price that represents a change from the security's previous days' consolidated closing price of more than the ''applicable price change,'' the Exchange specialist shall notify other Participant markets by sending a pre-opening notification through the ITS. The ''applicable price changes'' in current Rule 2001 are:

| Consolidated closing price[3] | Applicable price change (more than) |
|---|---|
| Network A[4]: | |
| Under $15 | ⅛ point. |
| $15 or over | ¼ point. |
| Network B: | |
| Under $5 or over | ⅛ point. |
| | ¼ point. |

Thereafter, the Exchange specialist shall not open the market in the security until not less than three minutes after the transmission of the pre-opening notification. Once an Exchange specialist has issued a pre-opening notification, other Participant markets may transmit ''pre-opening responses'' to the Exchange specialist through the ITS that contain ''obligations to trade.''

[3] If the previous day's closing price of an eligible listed security exceeded $100 and the security does not underlie an individual stock option contract listed and currently trading on an exchange, the ''applicable price change'' is one point.

[4] Network A is comprised of New York Stock Exchange (''NYSE'') securities; Network B is comprised of securities admitted on the American Stock Exchange, the Boston Stock Exchange, the Chicago Board Options Exchange, the Chicago Stock Exchange, the Cincinnati Stock Exchange, the Pacific Exchange, the Philadelphia Stock Exchange, or any other exchange, but not also admitted to dealings on the NYSE.

The Exchange specialist is then obligated to combine these obligations with orders it already holds in the security, and, on the basis of this aggregated information, decide upon the opening transaction in the security.

PHLX's current Rule 2001(c)(ii) states that the Pre-Opening Application also applies whenever the specialist wishes to resume trading on the Exchange in any Eligible Listed security following the initiation of a ''Regulatory Halt'' by any Participant that is an exchange if both trading has been halted in all exchange markets and, when the relevant security is also eligible for trading through the interface between the ITS and the NASD's Computer Assisted Execution System (''CAES''), the NASD has suspended quotations in the relevant security. Pursuant to current Rule 2001(c)(ii), the Pre-Opening Application does not apply when trading on the Exchange is resumed following the initiation of a Regulatory Halt if either (1) trading has not been halted in all exchange markets or, when the relevant security is also eligible for trading through the interface between the ITS and CAES, the NASD has not suspended quotations in the affected security or (2) following any other type of halt in trading on the Exchange for any reason. When the Pre-Opening Application applies under Rule 2001(c)(ii), the Exchange specialist must send a pre-opening notification through ITS.

The purpose of the proposal is to amend PHLX's Rule 2001 to provide that the Pre-Opening Application would be triggered whenever any ''indication of interest'' (i.e., an anticipated opening price range) is sent to the Consolidated Tape System prior to the opening or reopening of trading in the relevant security. Under the proposed change, the Pre-Opening Application would be triggered when indications of interest are disseminated in situations other than those defined in Rule 2001(c)(ii), ''Applicability Following Regulatory Halts,'' including the resumption of trading following the activation of market-wide circuit breakers.

In particular, the proposal would amend Rule 2001(b)(7) to provide that the Pre-Opening Application applies (i) ''whenever a market maker in any Participant market, in arranging an opening transaction in that market in a System security, anticipates that the opening transaction will be at a price that represents a change from the security's 'previous day's closing price' at more than the 'applicable price range' '' and (ii) ''whenever an 'indication of interest' (an anticipated opening price range) is sent to the CTA Plan Processor as required or permitted by the CTA Plan or a Participant market's rules.''[5] The proposed rule change also deletes current Rule 2001(c)(x), ''Tape Indications,'' replaces it with the exact language of the ITS Plan model Pre-Opening Application rule pertaining to tape indications, and renumbers the section as Rule 2001(c)(i)(B). The proposed rule change would replace all references to ''Trading Halt'' with ''halt or suspension in trading'' and delete Rule 2001(c)(ii), ''Applicability Following Regulatory Halts,'' because it would be inconsistent with the new language ''halt or suspension in trading.'' As a result, one standard procedure would then govern all trading halt situations and would include suspensions of trading pursuant to circuit breaker halts.[6]

As part of addressing the halt language described above, the Exchange had identified certain other necessary corrections, clarifications and updates to rule 2001. As a result, the proposed rule change amends Rule 2001(a), which contains the core definitions applicable to ITS, by adding the previously omitted definitions of Network A and Network B eligible securities and renumbering the remaining definitions. This addition is consistent with the comparable rules of other exchanges.[7] The Exchange also proposes to reorganize certain provisions of Rule 2001 to improve its clarity. The proposed rule change reorganizes Rule 2001(c) into sub-paragraphs (i) Notifications and (ii) Pre-Opening Responses. The proposed rule change further divides proposed Rule 2001(c)(i) into (A) Applicable Price Change sand (B) Tape Indications. The proposed rule change then further subdivides Rule 2001(c)(i)(A) into (1) Initial Notification, (2) Form of Notification, and (3) Subsequent Notification. The proposed rule change also amends proposed Rule 2001(c)(i)(A)(1) to state that the applicable price changes for Network B securities would be ⅛ point for consolidated closing prices under $5 and ¼ point for consolidated closing prices of $5 or over. Finally, the proposed rule change adds ''Network A'' to the footnote under proposed Rule 2001(c)(i)(A)(1) to state that ''[i]f the previous day's consolidated closing price of a Network A Eligible Listed security exceeded $100 and the security does not underlie an individual stock option contract listed and currently trading on a national securities exchange, the 'applicable price change' is one point.''

2. Statutory Basis

The Exchange believes that the proposed rule change is consistent with Section 6(b)(5) of the Act[8] in that it is designed to promote just and equitable principles of trade, to remove impediments to and to perfect the mechanism of a free and open market and a national market system, and, in general, to protect investors and the public interest, by treating all halts similarly for purposes of ITS. The proposed rule change is also consistent with Section 11A(a)(1)(D)[9] of the Act which states that the linking of all markets for qualified securities through communications and data processing facilities will foster efficiency, enhance competition, increase the information available to brokers, dealers, and investors, facilitate the offsetting of investors' orders, and contribute to the best execution of such orders.

*B. Self-Regulatory Organization's Statement on Burden on Competition*

The Exchange does not believe that the proposed rule change will impose any inappropriate burden on competition.

*C. Self-Regulatory Organization's Statement on Comments on the Proposed Rule Change Received from Members, Participants, or Others*

No written comments were either solicited or received.

## III. Date for Effectiveness of the Proposed Rule Change and Timing for Commission Action

Within 35 days of the publication of this notice in the **Federal Register** or within such longer period (i) as the Commission may designate up to 90 days of such date if it finds such longer period to be appropriate and publishes its reasons for so finding or (ii) as to which the self-regulatory organization consents, the Commission will:

(A) by order approve the proposed rule change, or

[5] The Commission notes that this language is essentially the same as that in other exchange's Pre-Opening Application rules and the model Pre-Opening Application rule contained in the ITS Plan.

[6] The Exchange notes that this amendment to Rule 2001 is being made in conjunction with comparable amendments to the ITS Plan, as well as the rules of the other ITS Participant exchanges, which originate from recent changes to exchange circuit breaker provisions. *See* SR–BSE–96–11 and Securities Exchange Act Release Nos. 37459 (July 19, 1996) 61 FR 39172 (July 26, 1996) (one-half hour and one hour halts) and 38221 (January 31, 1997) 62 FR 5871 (February 7, 1997) (350 and 550 point thresholds).

[7] *See e.g.,* Amex Rule 232(a) (v) and (vi).

[8] 15 U.S.C. 78f(b)(5).

[9] 15 U.S.C. 78k–1(a)(1)(D).

(B) institute proceedings to determine whether the proposed rule change should be disapproved.

## IV. Solicitation of Comments

Interested persons are invited to submit written data, views, and arguments concerning the foregoing. Persons making written submissions should file six copies thereof with the Secretary, Securities and Exchange Commission, 450 Fifth Street, NW., Washington, DC 20549. Copies of the submission, all subsequent amendments, all written statements with respect to the proposed rule change that are filed with the Commission, and all written communications relating to the proposed rule change between the Commission and any person, other than those that may be withheld from the public in accordance with the provisions of 5 U.S.C. 552, will be available for inspection and copying at the Commission's Public Reference Room. Copies of such filing will also be available for inspection and copying at the principal office of the Exchange. All submissions should refer to File No. SR–PHLX–97–13 and should be submitted by May 12, 1997.

For the Commission, by the Division of Market Regulation, pursuant to delegated authority.

**Margaret H. McFarland,**

*Deputy Secretary.*

[FR Doc. 97–10224 Filed 4–18–97; 8:45 am]

BILLING CODE 8010–01–M

## DEPARTMENT OF STATE

**[Public Notice No. 2531]**

## State Department Overseas Security Advisory Council; Notice of Meeting; Closed Meeting

The Department of State announces a meeting of the U.S. State Department—Overseas Security Advisory Council on Thursday, May 22, at the Ritz-Carlton Hotel, St. Louis, Missouri. Pursuant to Section 10(d) of the Federal Advisory Committee Act and 5 U.S.C. 552b(c) (1) and (4), it has been determined the meeting will be closed to the public. Matters relative to classified national security information as well as privileged commercial information will be discussed. The agenda calls for the discussion of classified and corporate proprietary/security information as well as private sector physical and procedural security policies and protective programs at sensitive U.S. Government and private sector locations overseas.

For more information contact Marsha Thurman, Overseas Security Advisory Council, Department of State, Washington, D.C. 20522–1003, phone: 202–663–0869.

Dated: April 8, 1997.

**William D. Clarke,**

*Acting Director of the Diplomatic Security Service.*

[FR Doc. 97–10228 Filed 4–18–97; 8:45 am]

BILLING CODE 4710–24–M

## TENNESSEE VALLEY AUTHORITY

## Sunshine Act Meeting

**AGENCY HOLDING THE MEETING:** Tennessee Valley Authority (Meeting No. 1494).

**TIME AND DATE:** 10 a.m. (CDT), April 23, 1997.

**PLACE:** Motlow State Community College, Eoff Hall Powers Auditorium, Ledford Mill Road, Tullahoma, Tennessee.

**STATUS:** Open.

*Agenda*

Approval of minutes of meeting held on March 26, 1997.

Discussion Item

Tims Ford Dam

New Business

B—Purchase Award

B1. Contract with Electrical Supply Alliance for General Electrical Items for all TVA Locations.

C—Energy

C1. Contract with Energy and Environmental Research Corporation, subject to final negotiation, to design and furnish low $NO_X$ gas reburn systems and technical support for Allen Fossil Plant Units 1 through 3.

C2. Extension of Voith Partners in Performance Agreement (Contract No. 93PBL–79099E), subject to final negotiation.

Real Property Transactions

E1. Sale of 10-year easement to the City of Mount Juliet, Tennessee, affecting approximately 16.6 acres of TVA's Gallatin-West Nashville Transmission Line, Tap into Lakeview in Wilson County, Tennessee (Tract No. XWGLT–1E), for use as a recreation area.

E2. Sale of Noncommercial, nonexclusive permanent easements to James W. Wollaston (Tract No. XTELR–189RE), David Weston (Tract No. XTELR–194RE), and William H. Culley (Tract No. XTELR–195RE) affecting 0.275 acre of Tellico Lake shoreline in Monroe and Loudon Counties, Tennessee, for construction and maintenance of recreational water-use facilities.

E3. Sale of a permanent easement to Rivers Run Properties, Inc., affecting approximately 0.96 acre of land on Melton Hill Lake in Anderson County, Tennessee (Tract No. XMHR–57H), for a road and utilities right-of-way.

Information Items

1. Delegation of authority to the Chief Administrative Officer to supplement Contract No. TV–93582V with Fitzgerald & Company.
2. Performance Incentive Plan and Fiscal Year 1997 Plan Goals.
3. TVA Long Term Deferred Compensation Plan,
4. Amendments to Supplemental Executive Retirement Plan.
5. New investment manager and new investment management agreement between the TVA Retirement System and Taplin, Canida & Habacht, Inc.
6. Sale of a 20-year permanent easement to Southern Ionics, Inc., affecting approximately 6 acres of land on Chickamauga Lake in McMinn County, Tennessee (Tract No. XCR–691BT), for a barge terminal.
7. Sale of Tennessee Valley Authority Power Bands.
8. Filing of condemnation cases.
9. Delegation of authority to the Vice President of Fuel Supply and Engineering, or such officer's designee, to enter into an amendment to Contract No. P–87P07–115632 with Pyxis Coal Sales Company.
10. Delegation of authority to the Vice President of Fuel Supply and Engineering, or such officer's designee, to enter into an amendment to Contract No. CSXT–C–57263 with CSX Transportation, Inc.
11. Approval of water releases on the Upper Ocoee River.
12. Delegation of authority to the Vice President of Fuel Supply and Engineering, or such officer's designee, to enter into an amendment to Contract No. P–90P07–115994 with Bell County Coal Corporation, by James River Coal Company.
13. Amendment to the Kentucky Reservoir Land Management Plan affecting approximately 37.3 acres of land on Kentucky Lake in Calloway County, Kentucky (Tract No. XGIR–44PT in the Land Management Plan and being designated in TVA land records as Tract No. XGIR–919RE), and a 30-year easement to Harbor Hill Marine, Inc., for commercial recreation affecting the same area.
14. Authorization to establish and operate a Tennessee liability company with Voith Hydro, Inc., to be known as Hydro Resource Solutions, LLC.

*For more information:* Please call TVA Public Relations at (423) 632–6000, Knoxville, Tennessee. Information is also available at TVA's Washington Office (202) 898–2999.

Dated: April 16, 1997.

**Edward S. Christenbury,**

*General Counsel and Secretary.*

[FR Doc. 97–10311 Filed 4–17–97; 10:57 am]

BILLING CODE 8120–08–M

## DEPARTMENT OF TRANSPORTATION

### Office of the Secretary

### Notice of Request for Comments on GPS-Modernization

**AGENCY:** Office of the Secretary (OST), DOT.

**ACTION:** Request for comments.

**SUMMARY:** The Assistant Secretary for Transportation Policy is seeking comments on the planning for the future of the Global Positioning System (GPS).

**DATES:** The input must be received by close of business (COB) Thursday, May 15, 1997.

**ADDRESSES:** The submissions should be made to the attention of Hank Skalski: (mail) US DOT—HQ AFSPC/DRFN, 150 Vandenberg St., Suite 1105, Peterson AFB, CO, 80914–4590; (e-mail) hskalski@spacecom.af.mil; or (fax) (719) 554–9604. Information and comments may be made via the World Wide Web at: http//:www.navcen.uscg.mil.

**FOR FURTHER INFORMATION CONTACT:** Hank Skalski: (mail) US DOT—HQ AFSPC/DRFN, 150 Vandenberg St., Suite 1105, Peterson AFB, CO, 80914–4590; (e-mail) hskalski@spacecom.af.mil; telephone (719) 554–2570, and facsimile (719) 554–9604.

**SUPPLEMENTARY INFORMATION:** The Global Positioning System (GPS) is a dual use (military and civil) space-based radionavigation system, providing navigation, positioning, and timing services. The US Air Force has begun an effort to develop a Future Worldwide Positioning, Navigation, and Timing System Capstone Requirements Document (CRD) to address the near, mid, and far term modernization of the GPS. The CRD is an over-arching document that will identify ''performance-based, operational requirements'' that address military and civil navigation, positioning, and timing needs for GPS or future space-based navigation systems. The Air Force requested DOT to coordinate the civil sector CRD input. The requirements in the CRD will be reviewed and ranked to develop an Acquisition Master Plan.

This request for information seeks data related to the formulation of the civil performance-based, operational requirements which will be used to derive future GPS technical, operational, and management characteristics. Input should consider a system of systems approach and address all segments of the basic GPS, as well as related applications/systems. Submission of data is requested no later than May 15, 1997, and should be made to the attention of Hank Skalski: (mail) US DOT—HQ AFSPC/DRFN, 150 Vandenberg St., Suite 1105, Peterson AFB, CO, 80914–4590; (e-mail) hskalski@spacecom.af.mil; (fax) 719–554–9604; or via the World Wide Web at: http//:www.navcen.uscg.mil. All inputs should include contact information.

Issued in Washington, DC on April 11, 1997.

**Joseph F. Canny,**

*Deputy Assistant Secretary for Transportation Policy, Department of Transportation.*

[FR Doc. 97–10149 Filed 4–18–97; 8:45 am]

BILLING CODE 4910–62–P

## DEPARTMENT OF TRANSPORTATION

### Federal Aviation Administration

**[Summary Notice No. PE–97–22]**

### Petitions for Exemption; Summary of Petitions Received; Dispositions of Petitions Issued

**AGENCY:** Federal Aviation Administration (FAA), DOT.

**ACTION:** Notice of petitions for exemption received and of dispositions of prior petitions.

**SUMMARY:** Pursuant to FAA's rulemaking provisions governing the application, processing, and disposition of petitions for exemption (14 CFR Part 11), this notice contains a summary of certain petitions seeking relief from specified requirements of the Federal Aviation Regulations (14 CFR Chapter I), dispositions of certain petitions previously received, and corrections. The purpose of this notice is to improve the public's awareness of, and participation in, this aspect of FAA's regulatory activities. Neither publication of this notice nor the inclusion or omission of information in the summary is intended to affect the legal status of any petition or its final disposition.

**DATES:** Comments on petitions received must identify the petition docket number involved and must be received on or before May 8, 1997.

**ADDRESSES:** Send comments on any petition in triplicate to: Federal Aviation Administration, Office of the Chief Counsel, Attn: Rule Docket (AGC–200), Petition Docket No. _____, 800 Independence Avenue, SW., Washington, D.C. 20591.

Comments may also be sent electronically to the following internet address: 9–NPRM–CMNTS@faa.dot.gov.

The petition, any comments received, and a copy of any final disposition are filed in the assigned regulatory docket and are available for examination in the Rules Docket (AGC–200), Room 915G, FAA Headquarters Building (FOB 10A), 800 Independence Avenue, SW., Washington, D.C. 20591; telephone (202) 267–3132.

**FOR FURTHER INFORMATION CONTACT:** Fred Haynes (202) 267–3939 or Angela Anderson (202) 267–9681 Office of Rulemaking (ARM–1), Federal Aviation Administration, 800 Independence Avenue, SW., Washington, DC 20591.

This notice is published pursuant to paragraphs (c), (e), and (g) of § 11.27 of Part 11 of the Federal Aviation Regulations (14 CFR Part 11).

Issued in Washington, D.C., on April 14, 1997.

**Donald P. Byrne,**

*Assistant Chief Counsel for Regulations.*

### Dispositions of Petitions

*Docket No.:* 26297

*Petitioner:* Fairchild Aircraft Incorporated

*Sections of the FAR Affected:* 14 CFR 91.531(a)(3)

*Description of Relief Sought/ Disposition:* To permit petitioner's type-rated company pilots to continue to conduct production and experimental test flights in SA227–CC and SA227DC airplanes without a pilot designated as second in command. It also permits all operators of Fairchild commuter category airplanes (SA227–CC, SA227–DC, and other airplanes on the same type certificate) to conduct flight operations without a designated second in command, provided the airplane is type certificated for single-pilot operations and is carrying nine or fewer passengers. No person may provide training nor may any person receive training while passengers are on board the aircraft during operations conducted under the privileges of this exemption. Grant, March 27, 1997, Exemption No. 5367D

*Docket No.:* 27609

*Petitioner:* M. Shannon & Associates

*Sections of the FAR Affected:* 14 CFR 91.9(a), 91.531(a)(1)&(2)

*Description of Relief Sought/ Disposition:* To permit petitioner and the operators of Cessna Citation 500, 550, and S550 airplanes to operate those airplanes without a pilot designated as second in command. No person may provide training nor may any person receive training while passengers are on board the aircraft during operations conducted under the privileges of this exemption. Grant, May 27, 1997, Exemption No. 6480A

*Docket No.:* 28720

*Petitioner:* Boeing Commercial Airplane Group

*Sections of the FAR Affected:* 14 CFR 25.561, 25.562, 25.785(b)

*Description of Relief Sought/ Disposition:* To allow petitioner to obtain certification of medical stretchers for transport of persons whose medical condition dictates such accommodation. The exemption is for Boeing Model 777 series airplanes. Grant, May 28, 1997, Exemption No. 6598

*Docket No.:* 28849

*Petitioner:* Era Aviation, Inc.

*Sections of the FAR Affected:* 14 CFR 121.631(c)

*Description of Relief Sought/ Disposition:*

1. To allow petitioner when conducting operations from its Bethel, Alaska base of operations, to make a change to its original dispatch release while the aircraft is en route without meeting the appropriate requirements of 121.593 through 121.661 at the time of the redispatch. This exemption applies only to operations conducted entirely within Alaska. Grant, March 19, 1997, Exemption No. 6595

[FR Doc. 97–10155 Filed 4–18–97; 8:45 am]

BILLING CODE 4910–13–M

## DEPARTMENT OF TRANSPORTATION

### Federal Aviation Administration

**[Summary Notice No. PE–97–23]**

### Petitions for Exemption; Summary of Petitions Received; Dispositions of Petitions Issued

**AGENCY:** Federal Aviation Administration (FAA), DOT.

**ACTION:** Notice of petitions for exemption received and of dispositions of prior petitions.

**SUMMARY:** Pursuant to FAA's rulemaking provisions governing the application, processing, and disposition of petitions for exemption (14 CFR Part 11), this notice contains a summary of certain petitions seeking relief from specified requirements of the Federal Aviation Regulations (14 CFR Chapter I), dispositions of certain petitions previously received, and corrections. The purpose of this notice is to improve the public's awareness of, and participation in, this aspect of FAA's regulatory activities. Neither publication of this notice nor the inclusion or omission of information in the summary is intended to affect the legal status of any petition or its final disposition.

**DATES:** Comments on petitions received must identify the petition docket number involved and must be received on or before May 8, 1997.

**ADDRESSES:** Send comments on any petition in triplicate to: Federal Aviation Administration, Office of the Chief Counsel, Attn.: Rule Docket (AGC–200), Petition Docket No. _____, 800 Independence Avenue, SW., Washington, DC 20591.

Comments may also be sent electronically to the following internet address: 9–NPRM–CMNTS@faa.dot.gov.

The petition, any comments received, and a copy of any final disposition are filed in the assigned regulatory docket and are available for examination in the Rules Docket (AGC–200), Room 915G, FAA Headquarters Building (FOB 10A), 800 Independence Avenue, SW., Washington, DC 20591; telephone (202) 267–3132.

**FOR FURTHER INFORMATION CONTACT:** Fred Haynes (202) 267–3939 or Angela Anderson (202) 267–9681 Office of Rulemaking (ARM–1), Federal Aviation Administration, 800 Independence Avenue, SW., Washington, DC 20591.

This notice is published pursuant to paragraphs (c), (e), and (g) of § 11.27 of Part 11 of the Federal Aviation Regulations (14 CFR Part 11).

Issued in Washington, DC, on April 14, 1997.

**Donald P. Byrne,**

*Assistant Chief Counsel for Regulations.*

### Petitions for Exemption

*Docket No.:* 28797

*Petitioner:* Air Tractor, Inc.

*Sections of the FAR Affected:* 14 CFR 36.1(a)(2)

*Description of Relief Sought:* To permit petitioner to operate its AT–602, AT–802, and AT–802A restricted category aircraft for oil spill eradication without complying with the noise requirements of part 36.

*Docket No.:* 28835

*Petitioner:* Southwest Airlines Co.

*Sections of the FAR Affected:* 14 CFR 43.3

*Description of Relief Sought:* To permit petitioner's ramp supervisors employed by Southwest to check aircraft brake temperatures upon arrival of that aircraft.

[FR Doc. 97–10156 Filed 4–18–97; 8:45 am]

BILLING CODE 4910–13–M

## DEPARTMENT OF TRANSPORTATION

### Federal Aviation Administration

### Aviation Rulemaking Advisory Committee Meeting on Noise Certification Issues

**AGENCY:** Federal Aviation Administration (FAA), DOT.

**ACTION:** Notice of meeting.

**SUMMARY:** The FAA is issuing this notice to advise the public of a meeting of the Federal Aviation Administration Aviation Rulemaking Advisory Committee to discuss noise certification issues.

**DATES:** The meeting will be held on May 14 at 2:00 p.m.

**ADDRESSES:** The meeting will be held at the General Aviation Manufacturers Association, 1400 K Street NW, Washington, DC.

**FOR FURTHER INFORMATION CONTACT:**

Ms. Angela O. Anderson, (202) 267–9681, Office of Rulemaking (ARM–200), 800 Independence Avenue, SW, Washington, DC 20591.

**SUPPLEMENTARY INFORMATION:** Pursuant to section 10(a)(2) of the Federal Advisory Committee Act (Pub. L. 92–463; 5 U.S.C. App. II), notice is hereby given of a meeting of the Aviation Rulemaking Advisory Committee (ARAC) to discuss noise certification issues. This meeting will be held May 14, 1997, at 2:00 p.m., at the General Aviation Manufacturers Association. The agenda for this meeting will include progress reports from the FAR/JAR Harmonization Working Group for Propeller-Driven Small Airplanes and the FAR/JAR Harmonization Working Group for Helicopters. It will also include the presentation of a concept paper from the FAR/JAR Harmonization Working Group for Subsonic Transport Airplanes.

Attendance is open to the interested public but may be limited to the space available. The public must make arrangements in advance to present oral statements at the meeting or may present statements to the committee at any time. In addition, sign and oral interpretation can be made available at the meeting, as well as an assistive listening device, if requested 10 calendar days before the meeting. Arrangements may be made by contacting the person listed under the heading **FOR FURTHER INFORMATION CONTACT**.

Issued in Washington, DC, on April 15, 1997.

**Paul Dykeman,**

*Assistant Executive Director for Noise Certification Issues, Aviation Rulemaking Advisory Committee.*

[FR Doc. 97–10154 Filed 4–18–97; 8:45 am]

BILLING CODE 4910–13–M

## DEPARTMENT OF TRANSPORTATION

### Federal Highway Administration

### Environmental Impact Statement: Replacement or Retrofit of the East Span of the San Francisco-Oakland Bay Bridge, San Francisco and Alameda Counties, CA

**AGENCY:** Federal Highway Administration (FHWA), DOT.

**ACTION:** Notice of intent.

**SUMMARY:** The FHWA is issuing this notice to advise the public that an environmental impact statement will be prepared for a proposed highway project in Alameda and San Francisco Counties, California.

**FOR FURTHER INFORMATION CONTACT:** John R. Schultz, Chief, District Operations-North, Federal Highway Administration, California Division, 980 Ninth Street, Suite 400, Sacramento, California 95814–2724.

**SUPPLEMENTARY INFORMATION:** The FHWA, in cooperation with the California Department of Transportation, will prepare an environmental impact statement (EIS) on a proposal to address seismic deficiencies in the existing East Span of the San Francisco-Oakland Bay Bridge, Interstate 80, by replacing or retrofitting the East Span from the bridge toll plaza to Yerba Buena Island.

Within the limits of the study for this project, various environmental resources and issues are known to exist and include but are not limited to: seismicity, tidal floodplain, water quality, wetlands, wildlife habitat, endangered species, navigation, historic resources, archaeological resources, noise, land use planning, and hazardous materials.

The EIS will address the impacts of retrofitting the existing structure, constructing a new structure and removing the existing structure.

Letters describing this proposed action and soliciting comments will be sent to appropriate Federal, State, and local agencies and to private organizations and individuals that have previously expressed, or are known to have, an interest in this proposal. In addition, public meetings will be held. Public Notice will be given of the exact time and place of the meetings.

To ensure that the full range of issues and alternatives related to this proposed action are addressed and all significant issues identified, comments and suggestions are invited from all interested parties. Comments or questions concerning this proposed action and the EIS should be directed to FHWA at the address provided above. The views of agencies having knowledge of or interest in the potential effects of the proposal on the environmental resources listed above are solicited.

(Catalog of Federal Domestic Assistance Program Number 20.205, Highway Planning and Construction. The regulations implementing Executive Order 12372 regarding intergovernmental consultation on Federal programs and activities apply to this program)

Issued on: April 10, 1997.

**G.P. Wong,**

*Senior Transportation Engineer, Sacramento, California.*

[FR Doc. 97–10204 Filed 4–18–97; 8:45 am]

BILLING CODE 4910–22–M

## DEPARTMENT OF TRANSPORTATION

### Federal Railroad Administration

### Maglev Study Advisory Committee; Notice of Fifth Meeting

**AGENCY:** Federal Railroad Administration (FRA), Department of Transportation (DOT).

**ACTION:** Notice of fifth meeting of the Maglev study advisory committee.

**SUMMARY:** As required by Section 9(a)(2) of the Federal Advisory Committee Act (FACA), 5 U.S.C. App. 2 (1988) and 41 CFR Part 101–6, section 101–6, 1015(a), the Federal Railroad Administration (FRA) gives notice of the fifth meeting of the Maglev Study Advisory Committee (''MSAC''). The purpose of the meeting is to advise DOT/FRA on the Congressionally mandated study of the near-term applications of maglev technology in the United States.

**DATES:** The fifth meeting of the MSAC is scheduled for 8:30 a.m. to 4:30 p.m. PST on Monday May 5, 1997.

**ADDRESSES:** The fifth meeting of the MSAC will be held in conjunction with the 1997 High Speed Ground Transportation Association Convention at Bally's Casino Resort at 3645 Las Vegas Boulevard South in Las Vegas, Nevada. The meeting is open to the public on a first-come, first-served basis and is accessible to individuals with disabilities. Those with special needs should inform Mr. Mongini 5 days in advance of the meeting so appropriate facilities can be provided.

**FOR FURTHER INFORMATION CONTACT:** Arrigo Mongini, Deputy Associate Administrator for Railroad Development, FRA RDV–2, 400 Seventh Street S.W., Washington D.C. 20590 (mailing address only) or by telephone at (202) 632–3286.

**SUPPLEMENTARY INFORMATION:** The fifth meeting of the Maglev Study Advisory Committee (MSAC) will be held on May 5, 1997 from 8:30 a.m. to 4:30 p.m. PST at Bally's Casino Resort at 3645 Las Vegas Boulevard South in Las Vegas, Nevada. The meeting is open to the public.

The MSAC was created by the National Highway System Designation Act to advise the Secretary of Transportation in the preparation of a report to be submitted by the Secretary to the Congress evaluating the near term applications of magnetic levitation transportation technology in the U.S. ''with particular emphasis on identifying projects warranting immediate application of such technology.'' The Act further specifies that the study also ''evaluate the use of innovative finance techniques for the construction and operation of such projects.'' The eight committee members collectively have experience in magnetic levitation transportation, design and construction, public and private finance, and infrastructure policy disciplines. The conference report on the National Highway System Designation Act specifies that ''[t]he Committee should identify and analyze specific magnetic leviation projects, such as a connector from New York City to its airports, the transportation project under development between Baltimore, Maryland and Washington, DC , and technology transfer efforts underway in Pittsburgh, Pennsylvania, so that Congress can better assess how near-term magnetic levitation technology could complement existing modes of transportation * * *.'' The Secretary has assigned responsibility for preparing the report to the Federal Railroad Administrator, working closely with the MSAC. The Secretary's report to the Congress will discuss the extent to which the above and other potential magnetic levitation projects warrant immediate application, taking into account such factors as ability to be financed, benefits vs costs, extent of public commitment and support, and national significance.

This meeting will focus on reviewing the draft of the final report to the Secretary of Transportation and

discussing recommendations. It is planned to have a break-out meeting in the late afternoon as part of the convention to brief attendees on the Committee's progress to date.

Issued in Washington, D.C. on April 16, 1997.

**S. Mark Lindsey,**

*Chief Counsel.*

[FR Doc. 97–10237 Filed 4–18–97; 8:45 am]

BILLING CODE 4910–06–P

## DEPARTMENT OF TRANSPORTATION

## Research and Special Programs Administration

**[Contract DTRS–56–96–C–0010]**

## Third Quarterly Performance Review Meeting on the Contract ''Detection of Mechanical Damage in Pipelines''

**AGENCY:** Research and Special Programs Administration (RSPA), DOT.

**ACTION:** Notice of meeting.

**SUMMARY:** RSPA invites the pipeline industry, in-line inspection (''smart pig'') vendors, and the general public to the third quarterly performance review meeting of progress on the contract ''Detection of Mechanical Damage in Pipelines.'' The meeting is open to anyone, and no registration is required. This contract is being performed by Battelle Memorial Institute (Battelle), along with the Southwest Research Institute, and Iowa State University. The contract is a research and development contract to develop electromagnetic in-line inspection technologies to detect and characterize mechanical damage and stress corrosion cracking. There will be a presentation on the status of the contract tasks, including a summary of the activity and progress during the past quarter and the projected activity for the next quarter.

**DATES:** The third quarterly performance review meeting will be held on May 5, 1997, beginning at 12:30 p.m. and ending around 4:30 p.m.

**ADDRESSES:** The quarterly review meeting will be held in rooms 6332–36 of the Department of Transportation Headquarters Building, 400 7th Street, S.W., Washington, DC. Non-government personnel must enter the building through the southwest entrance in order to receive a temporary building pass.

**FOR FURTHER INFORMATION CONTACT:** Lloyd W. Ulrich, Contracting Officer's Technical Representative, Office of Pipeline Safety, telephone:(202) 366–4556, FAX: (202) 366–4566, e-mail: lloyd.ulrich@rspa.dot.gov.

**SUPPLEMENTARY INFORMATION:**

### I. Background

RSPA is holding quarterly public meetings on the status of its contract ''Detection of Mechanical Damage in Pipelines'' (Contract DTRS–56–96–C–0010) because in-line inspection research is of immediate interest to the pipeline industry and in-line inspection vendors. RSPA will continue this practice throughout the two- or three-year period of the contract. The meetings will allow disclosure of the results to all interested parties and will provide an opportunity for interested parties to ask Battelle questions concerning the research.

The first meeting was conducted on October 22, 1996, in Washington, DC. The second quarterly review meeting was held on January 14, 1997 in Houston, Texas, in parallel with a meeting of the Gas Research Institute's (GRI) Nondestructive Evaluation Technical Advisory Group to enable significant participation by pipeline operators and inspection vendors. This, the third quarterly review meeting is being held in Washington in advance of the May 6–7, 1997, meetings of RSPA's two technical advisory committees, the Technical Pipeline Safety Standards Committee (TPSSC) for gas pipelines and the Technical Hazardous Liquid Pipeline Safety Standards Committee (THLPSSC) for hazardous liquid pipelines. Each committee is a 15 member, Congressionally mandated advisory committee (49 U.S.C. 60115) responsible for reviewing proposed pipeline safety standards for technical feasibility, reasonableness, and practicability. An announcement of the TPSSC and THLPSSC meetings appeared in the **Federal Register** on April 4, 1997 (62 FR 16212). The advisory committee members have been invited to this quarterly review meeting in order for interested members to obtain a detailed briefing on the status of the research.

The research contract with Battelle is a cooperative effort between GRI and DOT, with GRI providing technical guidance.[1] Future meetings may be conducted in Columbus, Ohio (Battelle); San Antonio, Texas (Southwest Research Institute); Ames, Iowa (Iowa State University); or Chicago, Illinois (Gas Research Institute). It is anticipated that every other meeting will be conducted in Washington, DC. Each of the future meetings will be announced in the **Federal Register** at least two weeks prior to the meeting.

Attendance is open to all and does not require advanced registration nor advanced notification to RSPA. However, we specifically want that segment of the pipeline industry involved with in-line inspection to be aware of the status of this contract. To assure that the industry is well represented at these meetings, we have invited the major domestic in-line inspection company (Tuboscope-Vetco Pipeline Services) and the following pipeline industry trade associations: American Petroleum Institute, Interstate Natural Gas Association of America, and the American Gas Association. Each has named an engineering/technical representative.

### II. The Contract

The Battelle contract is a research and development contract to evaluate and develop in-line inspection technologies for detecting mechanical damage and cracking, such as stress-corrosion cracking (SCC), in natural gas transmission and hazardous liquid pipelines. Third-party mechanical damage is one of the largest causes of pipeline failure, but existing in-line inspection tools cannot always detect or accurately characterize the severity of some types of third-party damage that can threaten pipeline integrity. Although SCC is not very common on pipelines, it usually appears in high-stress, low-population-density areas and only when a limited set of environmental conditions are met. Several attempts have been made to develop an in-line inspection tool for SCC, but there is no commercially successful tool on the market.

Under the contract, Battelle will evaluate and advance magnetic flux leakage (MFL) inspection technology for detecting mechanical damage and two electromagnetic technologies for detecting SCC. The focus is on MFL for mechanical damage because experience shows MFL can characterize some types of mechanical damage and can be successfully used for metal-loss corrosion under a wide variety of conditions. The focus for SCC is on electromagnetic technologies that can be used in conjunction with, or as a modification to, MFL tools. The technologies to be evaluated take advantage of the MFL magnetizer either by enhancing signals or using electrical currents that are generated by the passage of an inspection tool through a pipeline.

The contract includes two major tasks during the base two years of the contract. Task 1 is to evaluate existing

[1] See the notice of the first quarterly performance review meeting (61 FR 53484; Oct. 11, 1996) for information on the Memorandum of Understanding between DOT and GRI.

MFL signal generation and analysis methods to establish a baseline from which today's tools can be evaluated and tomorrow's advances measured. Then, it will develop improvements to signal analysis methods and verify them through testing under realistic pipeline conditions. Finally, it will build an experience base and defect sets to generalize the results from individual tools and analysis methods to the full range of practical applications.

Task 2 is to evaluate two inspection technologies for detecting stress corrosion cracks. The focus in Task 2 is on electromagnetic techniques that have been developed in recent years and that could be used on or as a modification to existing MFL tools. Three subtasks will evaluate velocity-induced remote-field techniques, remote-field eddy-current techniques, and external techniques for sizing stress corrosion cracks.

A Task 3 is being considered for an option year to the contract. Task 3, if done, will verify the results from Tasks 1 and 2 by tests under realistic pipeline conditions. Task 3 will (1) extend the mechanical damage detection, signal decoupling, and sizing algorithms developed in the basic program to include the effects of pressure, (2) verify the algorithms under pressurized conditions in GRI's 4,700 foot, 24-inch diameter Pipeline Simulation Facility (PSF) flow loop, and (3) evaluate the use of eddy-current techniques for characterizing cold working within mechanical damage.

A drawback of present pig technology is the lack of a reliable pig performance verification procedure that is generally accepted by the pipeline industry and RSPA. The experience gained by the pipeline industry and RSPA with the use of the PSF flow loop in this project will provide a framework to develop procedures for evaluating pig performance. Defect detection reliability is critical if instrumented pigging is to be used as an in-line inspection tool in pipeline industry risk management programs.

The ultimate benefits of the project could be more efficient and cost-effective operations, maintenance programs to monitor and enhance the safety of gas transmission and hazardous liquid pipelines. Pipeline companies will benefit from having access to inspection technologies for detecting critical mechanical damage and stress-corrosion cracks. Inspection tool vendors will benefit by understanding where improvements are beneficial and needed. These benefits will support RSPA's long-range objective of ensuring the safety and reliability of the gas transmission and hazardous liquid pipeline infrastructure.

Issued in Washington, D.C. on April 15, 1997.

**Richard D. Huriaux,**

*Acting Associate Administrator for Pipeline Safety.*

[FR Doc. 97–10196 Filed 4–18–97; 8:45 am]

BILLING CODE 4910–60–P

---

## DEPARTMENT OF TRANSPORTATION

### Surface Transportation Board

**[STB Finance Docket No. 33346]**

### Soo Line Railroad Company—Temporary Trackage Rights Exemption—I&M Rail Link, LLC

I&M Rail Link, LLC (I&M) has agreed to grant temporary local and overhead trackage rights to Soo Line Railroad Company d/b/a/ Canadian Pacific Railway (CPR) over I&M's trackage between milepost 123.8 near Comus and milepost 100.5 near Owatonna, in Rice and Steele Counties, MN.

This notice is related to I&M Rail Link, LLC—Acquisition and Operation Exemption—Certain Lines of Soo Line Railroad Company D/B/A/ Canadian Pacific Railway, STB Finance Docket No. 33326 (STB served April 2, 1997). The purpose of the trackage rights is to permit CPR to provide continuous service on the line until I&M commences operations on the line. CPR has submitted a filing in support of the notice. The temporary trackage rights will be effective on April 12, 1997, and will terminate automatically on April 12, 1999.[1]

As a condition to this exemption, any employees affected by the trackage rights will be protected by the conditions imposed in Norfolk and Western Ry. Co.—Trackage Rights—BN, 354 I.C.C. 605 (1978), as modified in Mendocino Coast Ry., Inc.—Lease and Operate, 360 I.C.C. 653 (1980). This notice is filed under 49 CFR 1180.2(d)(7). If it contains false or misleading information, the exemption is void *ab initio.* Petitions to revoke the exemption under 49 U.S.C. 10502(d) may be filed at any time. The filing of a petition to revoke will not automatically stay the transaction.

[1] The Board has previously authorized temporary or limited term trackage rights. Limiting the term of the trackage rights is consistent with the limited scope of the transaction. Se, e.g., Union Pacific Railroad Company—Trackage Rights Exemption—Chicago, Central & Pacific Railroad Company, STB Finance Docket No. 32959 (Sub-No. 1) (STB served July 25, 1996).

An original and 10 copies of all pleadings, referring to STB Finance Docket No. 33346, must be filed with the Surface Transportation Board, Office of the Secretary, Case Control Unit, 1925 K Street, N.W., Washington, DC 20423–0001. In addition, a copy of each pleading must be served on Larry D. Starns, Esq., Leonard, Street and Deinard, 150 South Fifth Street, Minneapolis, MN 55402.

Decided: April 15, 1997.

By the Board, David M. Konschnik, Director, Office of Proceedings.

**Vernon A. Williams,**

*Secretary.*

[FR Doc. 97–10235 Filed 4–18–97; 8:45 am]

BILLING CODE 4915–00–P

---

## DEPARTMENT OF TRANSPORTATION

### Surface Transportation Board

**[STB Finance Docket No. 33388]**

### CSX Corporation and CSX Transportation, Inc., Norfolk Southern Corporation and Norfolk Southern Railway Company—Control and Operating Leases/Agreements—Conrail Inc. and Consolidated Rail Corporation

**AGENCY:** Surface Transportation Board, DOT.

**ACTION:** Decision No. 2; Notice of prefiling notification and request for comments.

**SUMMARY:** Pursuant to 49 CFR 1180.4(b), CSX Corporation (CSXC), CSX Transportation, Inc. (CSXT), Norfolk Southern Corporation (NSC), Norfolk Southern Railway Company (NSR), Conrail Inc. (CRI), and Consolidated Rail Corporation (CRC)[1] have notified the Surface Transportation Board (Board) of their intent to file a joint application seeking authority under 49 U.S.C. 11323–25 for: (1) The acquisition of control, by CSX and NS, of CRI, which is to be jointly owned by CSXC and NSC, by and through a special purpose limited liability company (LLC) and LLC's wholly owned subsidiary, Green Acquisition Corporation (Acquisition); and (2) as soon as practicable after the authorization and exercise of such control, the division of Conrail's assets into (a) certain assets which will continue to be held by CRI and CRC or their subsidiaries and operated for Conrail's account and that

[1] CSXC and CSXT are referred to collectively as CSX. NSC and NSR are referred to collectively as NS. CRI and CRC are referred to collectively as Conrail. CSX, NS, and Conrail are referred to collectively as applicants.

of its stockholders; (b) certain assets which will be the subject of separate long-term operating agreements, operating leases or other operating arrangements with CSX and NS, respectively; and (c) certain assets which will be separately owned by CSX and NS. In addition, as part of the overall transaction, NSR will sell to CSXT a line of railroad formerly owned by Conrail and now owned by NSR.

The Board finds this to be a major transaction as defined in 49 CFR part 1180. As requested by applicants, the Board also waives the minimum 3-month prefiling notification requirement of 49 CFR 1180.4(b)(1), and invites comments from interested persons on applicants' proposed procedural schedule.

**DATES:** Written comments on applicants' proposed schedule must be filed with the Board no later than May 1, 1997. Applicants' reply is due by May 8, 1997.

**ADDRESSES:** An original and 25 copies of all documents must refer to STB Finance Docket No. 33388 and must be sent to the Office of the Secretary, Case Control Unit, ATTN: STB Finance Docket No. 33388, Surface Transportation Board, 1925 K Street, N.W., Washington, DC 20423–0001.[2] In addition, one copy of all documents in this proceeding must be sent to Administrative Law Judge Jacob Leventhal, Federal Energy Regulatory Commission, 888 First Street, N.E., Suite 11F, Washington, DC 20426 [(202) 219–2538; FAX: (202) 219–3289] and to each of applicants' representatives: (1) Dennis G. Lyons, Esq., Arnold & Porter, 555 12th Street, N.W., Washington, DC 20004–1202; (2) Richard A. Allen, Esq., Zuckert, Scoutt & Rasenberger, L.L.P., 888 Seventeenth Street, N.W., Washington, DC 20006–3939; and (3) Paul A. Cunningham, Esq., Harkins Cunningham, Suite 600, 1300 Nineteenth Street, N.W., Washington, DC 20036.

**FOR FURTHER INFORMATION CONTACT:** Julia M. Farr, (202) 565–1613. [TDD for the hearing impaired: (202) 565–1695.]

[2] In addition to submitting an original and 25 copies of all documents filed with the Board, the parties are encouraged to submit all pleadings and attachments as computer data contained on a 3.5-inch floppy diskette which is formatted for WordPerfect 7.0 (or formatted so that it can be converted into WordPerfect 7.0) and is clearly labeled with the identification acronym and number of the pleading contained on the diskette (49 CFR 1180.4(2)). The computer data contained on the computer diskettes submitted will be subject to the protective order granted in Decision No. 1, served on April 16, 1997, and is for the exclusive use of Board employees reviewing substantive matters in this proceeding. The flexibility provided by such computer file data will facilitate expedited review by the Board and its staff.

**SUPPLEMENTARY INFORMATION:** In the notice of intent (CSX/NS–1) filed April 10, 1997, applicants state that CSX and NS will participate jointly in the acquisition of CRI consistent with CSX's and CRI's October 14, 1996 Merger Agreement, as amended through and including a Fourth Amendment dated April 8, 1997, and under agreements made between CSX and NS. CSX and NS jointly, through LLC and Acquisition, will acquire all CRI shares not already held by voting trusts of which CSX and NS are beneficiaries, through a tender offer to be followed by the merger of CRI with a subsidiary of Acquisition. The shares of CRI as acquired will be placed in a voting trust subject to the Board's regulations at 49 CFR part 1013.

Once the CRI stock has been acquired, and contingent on and following the Board's authorization and approval of control and the other contemplated transactions, CSX and NS will assume control of Conrail and, as soon as practicable thereafter, will cause Conrail to be restructured into (a) certain assets and functions that will continue to be operated and performed by Conrail for its own account but for the benefit of NS and CSX, (b) certain fixed assets, to be owned by Conrail or subsidiaries, which will be the subject of separate long-term operating agreements, operating leases, or other arrangements with CSX and NS, respectively, and (c) certain other assets of Conrail which will be divided between CSX and NS and acquired and operated by them. The surviving company will own and operate, directly or through subsidiaries, among other things, certain track and other fixed rail assets in the New York/New Jersey area, the Philadelphia, PA/South New Jersey area and the Detroit, MI, area. Both CSX and NS will serve shippers on the former Monongahela Railroad.

The subjects of the operating agreement or operating lease with CSX will include, among other things, a north-south route between the New York area and Philadelphia and a route from the New York area through Albany, NY, Buffalo, NY, and Cleveland, OH, to St. Louis, MO. The subjects of the operating agreement or operating lease with NS will include, among other things, north-south routes from the New York area to Washington, DC, and to Hagerstown, MD, a route westward from Philadelphia, and a route westward from the New York area to Buffalo.

As part of the contemplated transaction, NSR will transfer to CSXT its line of railroad (formerly a Conrail line) between Ft. Wayne, IN, and the Chicago, IL, metropolitan area.

Applicants state that they will use the year 1995 as the base year for purposes of their impact analysis to be filed in the application, and that they anticipate filing their application on or before July 10, 1997.[3]

The Board finds that this is a major transaction, as defined at 49 CFR 1180.2(a), as it is a control transaction involving two or more Class I railroads. The application must conform to the regulations set forth at 49 CFR part 1180 and must contain all information required therein for major transactions, except as modified by any advance waiver.[4] The carriers are also required to submit maps with overlays that show their existing routes and those of their competitors.

## Petition for Waiver

By petition filed April 10, 1997 (CSX/NS–2), applicants request that the Board waive the requirements of 49 CFR 1180.4(b)(1) so that they need not wait 3 months before filing their proposed primary application. Applicants propose to submit their primary application approximately 2 months from the date of filing of their Notice of Intent. Applicants contend that the public has been afforded sufficient notice of the proposed control proceeding. According to applicants, the Notice of Intent that CSX filed on October 18, 1996, regarding a proposed merger with Conrail, the Notice of Intent that NS filed on November 6, 1996, regarding a competing proposed merger with Conrail, and the substantial and continuous media coverage of the proposed acquisition of Conrail and the negotiations leading to the current agreement assure that the Board and all interested parties and members of the public have had notice that an application will be filed, as well as of the nature of the proposed transaction.

On April 16, 1997, Canadian National Railway Company (CN) filed (CN–4) a response in opposition to applicants' CSX/NS–2 petition for waiver.[5] First,

[3] Applicants propose to submit their primary application approximately 2 months from the date of filing of their Notice of Intent if the prefiling requirement is waived. As discussed below, we will grant applicants' petition for waiver of the prefiling requirement of 49 CFR 1180.4(b) and permit filing of the application sooner than 3 months after the filing of the Notice of Intent.

[4] The ICC Termination Act of 1995, Pub. L. No. 104–88, 109 Stat. 803, requires that we consider the effect of the proposed transaction ''on competition among rail carriers in the affected region or in the national rail system.'' 49 U.S.C. 11324(b)(5). Applicants are reminded to include analysis on both elements of this criterion in their competitive analyses.

[5] Our merger rules specifically do not allow replies to petitions for waiver. See 49 CFR

Continued

CN argues that ''any waiver of the 3-month notice requirement would cut into time needed by the Board and all parties to deal with a transaction of the size and scope proposed in this proceeding.'' Second, CN argues that, ''if there is to be any expedition, it is better that it come during the period when the application is being prepared rather than during the period when the application is being analyzed, responded to and acted upon by the agency with responsibility to decide this matter.'' Accordingly, CN argues that any waiver of the prefiling notification should not set a precedent for truncating the 365-day procedural schedule adopted earlier by the Board for considering a proposed Conrail merger, and that the final procedural schedule should take into account any shortening of the 3-month notice requirement that may have been granted. Finally, CN argues that a complete and open-ended waiver is inappropriate and prejudicial to all other parties because it would create uncertainty for the Board and for other parties, who could be faced with a ''surprise'' filing in 5 or 6 weeks.

We believe that the public has been afforded sufficient notice of the proposed control proceeding, and we disagree that a waiver of the prefiling notice requirement would create uncertainty or be prejudicial to any party. Parties will be given an opportunity to comment on applicants' proposed expedited procedural schedule, and these comments will be considered by the Board in determining a fair and reasonable final procedural schedule. We find that waiver of the prefiling requirement set forth at 49 CFR 1180.4(b)(1) is appropriate, and therefore grant applicants' CSX/NS–2 petition.

**Petition for Protective Order**

By petition also filed April 10, 1997 (CSX/NS–3), applicants requested a protective order to protect confidential, highly confidential, and proprietary information, including contract terms, shipper-specific traffic data, and other traffic data to be submitted in connection with the control application. In Decision No. 1, served April 16, 1997, applicants' petition for a protective order was granted and Administrative Law Judge Jacob Leventhal was assigned to handle all discovery matters and the initial resolution of all discovery disputes in this proceeding.[6]

1180.4(f)(3). Under the circumstances, however, we will accept the CN–4 pleading.

[6] CN filed a reply that was received by the Board after issuance of Decision No. 1.

**Petition to Establish a Procedural Schedule**

Also on April 10, 1997, applicants filed a petition to establish a proposed procedural schedule (CSX/NS–4). Applicants' proposed procedural schedule is as follows:

*Proposed Procedural Schedule*

F − 30 Preliminary Environmental Report provided to Section of Environmental Analysis.

F Primary application (including the Environmental Report) and related applications filed.

F+30 Board notice of acceptance of primary application and related applications, [petitions, and notices] published in the **Federal Register**, including notice of any transaction-related abandonment proposals.

F+45 Notification of intent to participate in proceeding due, including notice of intent to participate in abandonment proceedings.

F+60 Description of anticipated inconsistent and responsive applications due; petitions for waiver or clarification due with respect to such applications.

F+120 Inconsistent and responsive applications due. All comments, protests, requests for conditions, and any other opposition evidence and arguments due. Comments by U.S. Department of Justice (DOJ) and U.S. Department of Transportation (DOT) due. Opposition submissions, requests for public use conditions, and Trails Act requests due for all transaction-related abandonment proposals.

F+135 Notice of acceptance (if required) of inconsistent and responsive applications published in the **Federal Register**.

F+150 Response to inconsistent and responsive applications due. Response to comments, protests, requested conditions, and other opposition due. Rebuttal in support of primary application and related applications due. Rebuttal [and] responses to requests for public use and Trails Act conditions for transaction-related abandonments due.

F+165 Rebuttal in support of inconsistent and responsive applications due.

F+185 Briefs due, all parties (not to exceed 50 pages), except that CSX and NS may file separate briefs, each not to exceed 50 pages.

F+200 Oral argument (at Board's discretion).

F+205 Voting conference.

F+255 Date of service of final decision.

Under applicants' proposal, immediately upon each evidentiary filing, the filing party will place all documents relevant to the filing (other than documents that are privileged or otherwise protected from discovery) in a depository open to all parties (except that CSX and NS may maintain separate depositories), and will make its witnesses available for discovery depositions. Access to documents subject to protective order will be appropriately restricted. Parties seeking discovery depositions may proceed by agreement. Relevant excerpts of transcripts will be received in lieu of cross-examination, unless cross-examination is needed to resolve material issues of disputed fact. Discovery on responsive and inconsistent applications will begin immediately upon their filing. The Administrative Law Judge assigned to this proceeding will have the authority initially to resolve any discovery disputes.

Applicants also request that, as in recent merger proceedings, the Board indicate that it will require appeals of ALJ decisions to be filed within 3 working days and responses to appeals or to any procedural motion filed with the Board also to be filed within 3 working days.

Applicants' proposed schedule is substantially similar to that adopted in *Union Pacific Corporation, Union Pacific Railroad Company and Missouri Pacific Railroad Company—Control and Merger—Southern Pacific Rail Corporation, Southern Pacific Transportation Company, St. Louis Southwestern Railway Company, SPCSL Corp. and The Denver and Rio Grande Western Railway Company (UP/SP),* Finance Docket No. 32760 (see Decision No. 6, ICC served Oct. 19, 1995; and Decision No. 9, ICC served Dec. 27, 1995).

Applicants are proposing that any applications, petitions, or notices for authority for, or for exemption of, merger-related abandonments, and any supporting verified statements, be filed with the primary application, and be treated as related applications, with any opposition evidence, comments, rebuttal and briefing on those applications to be submitted in accordance with the same schedule as the primary application. We agree that we should process any merger-related abandonment proceedings in accordance with the overall merger procedural schedule, rather than applying the procedures found at 49 U.S.C. 10903–04, which is similar to the process we used in the *UP/SP* proceeding. See UP/SP, Decision No. 9 (ICC served Dec. 27, 1995), slip op. at 9–10. Therefore, we will grant

applicants' request for waiver under 49 CFR 1152.24(e)(5) to permit modifications of the procedures and timetables for handling abandonment applications prescribed in 49 CFR 1152.26[7] to be consistent with the procedural schedule subsequently adopted in this proposed merger proceeding.[8]

We invite all interested persons to submit written comments on applicants' proposed procedural schedule. Comments must be filed by May 1, 1997. Applicants' reply is due by May 8, 1997.

This action will not significantly affect either the quality of the human environment or the conservation of energy resources.

Decided: April 16, 1997.

By the Board, Chairman Morgan and Vice Chairman Owen.

**Vernon A. Williams,**

*Secretary.*

[FR Doc. 97–10337 Filed 4–18–97; 8:45 am]

BILLING CODE 4915–00–P

[7] Applicants' CSX/NS–4 petition sought waiver of the Board's rules to permit ''departures from the procedures and timetables prescribed in 49 [CFR] 1152.25(d) (6) and (7).'' Those references are to rules no longer in effect.

[8] Applicants indicate that they intend to file shortly a petition for waiver or clarification of Railroad Consolidation Procedures, and related relief. As in UP/SP, applicants should also seek an exemption under 49 U.S.C. 10502 from any statutory procedural requirements at 49 U.S.C. 10903–04 necessary to allow the Board to process the merger-related abandonment applications under the procedural schedule ultimately adopted. See UP/SP, Decision No. 3 (ICC served Sept. 5, 1995), slip op. at 7–10.

# Corrections

Federal Register
Vol. 62, No. 76
Monday, April 21, 1997

This section of the FEDERAL REGISTER contains editorial corrections of previously published Presidential, Rule, Proposed Rule, and Notice documents. These corrections are prepared by the Office of the Federal Register. Agency prepared corrections are issued as signed documents and appear in the appropriate document categories elsewhere in the issue.

## DEPARTMENT OF AGRICULTURE

### Forest Service

### Use of Certified Forage to Prevent the Spread of Noxious Weeds on National Forest System Lands in Montana

*Correction*

In notice document 97–7754 appearing on page 14668 in the issue of Thursday, March 27, 1997 make the following correction:

In the first column, under **DATES** ''March 26, 1997'' should read ''May 27, 1997''.

BILLING CODE 1505-01-D

## DEPARTMENT OF AGRICULTURE

### Natural Resources Conservation Service

### Dunloup Creek Watershed, West Virginia

*Correction*

In notice document 97–7381, beginning on page 14114, in the issue of Tuesday, March 25, 1997, make the following correction:

On page 14114, in the second column, in **FOR COMMENTS OR FURTHER INFORMATION CONTACT:** Roger Lee Bensey, the Fax number in the last line, ''304 291-5628'' should read ''304-291-4628''.

BILLING CODE 1505-01-D

## DEPARTMENT OF AGRICULTURE

### Rural Housing Service

### Rural Business-Cooperative Service

### Rural Utilities Service

### Farm Service Agency

### Notice of Request for Information Collection

*Correction*

In notice document 97–8994, appearing on page 17144 in the issue of Wednesday, April 9, 1997, in the second column, in the **DATES** section, in the second line, ''June 9, 1997'' should be added immediately following ''before'', and ''[insert date 60 days after date of publication in the **Federal Register**]'' should be removed.

BILLING CODE 1505-01-D

## DEPARTMENT OF COMMERCE

### National Oceanic and Atmospheric Administration

### 50 CFR Part 679

**[Docket No. 961107312-7021-02; I.D. 040197D]**

### Fisheries of the Exclusive Economic Zone Off Alaska; Shortraker/Rougheye Rockfish in the Aleutian Islands Subarea

*Correction*

In the issue of Monday, April 14, 1997, on page 18167, in the first column, the correction to the NOAA rule document should read as follows:

In rule document 97–8858, appearing on page 16736, in the issue of Tuesday, April 8, 1997, in the third column, the file line should read as set forth below:

**[FR Doc. 97-8858 Filed 4-2-97; 2:58 pm]**

BILLING CODE 3510-22-F

BILLING CODE 1505-01-D

## DEPARTMENT OF THE INTERIOR

### Office of Surface Mining Reclamation and Enforcement

### 30 CFR Part 915

**[SPATS No. IA-009-FOR]**

### Iowa Regulatory Program

*Correction*

In rule document 97–8788 beginning on page 16490 in the issue of Monday, April 7, 1997, make the following correction:

On page 16490, in the third column, in the last paragraph, in the eighth line, after ''Drinking,'' insert ''domestic, or residential water supply. The State also proposed to add a new''.

BILLING CODE 1505-01-D

## DEPARTMENT OF THE INTERIOR

### Office of Surface Mining Reclamation and Enforcement

### 30 CFR Part 943

**[SPATS No. TX–017–FOR]**

### Texas Regulatory Program

*Correction*

In rule document 97–7533, beginning on page 14311 in the issue of Wednesday, March 26, 1997, make the following corrections:

1. On page 14312, in the second column, under *A. Nonsubstantive Revisions to Texas' Regulations*, in the sixth line, ''substantive'' should read ''unsubstantive''.
2. On page 14313, in the second column, in the fifth paragraph, in the fifth line, ''and 817.68(d),'' should read ''and 817.68(c), (d),''.
3. On page 14315, in the third column, in 9., in the first line, ''709.027(F)'' should read ''709.027(f)''.
4. On page 14319, in the first column, in 21., in the first line, ''816.34'' should read ''816.341''.
5. On page 14319, in the first column, under 21., in the fifth line, ''817.43(a)(e)'', should read ''817.43(a)(4)''.
6. On page 14319, in the second column, under 23., in the eighth line ''(a)(3)(1)'' should read ''(a)(3)(i)''.
7. On page 14319, in the third column, under 25., in paragraph (a), in the ninth line, ''816.666(a)'' should read ''816.66(a)''.

8. On page 14321, in the second column, under 30., in paragraph (b), in the third line, ''943.16(a)'' should read ''943.16(q)''.

9. On page 14321, in the second column, under 30., in the last line of paragraph (b), ''943.16(a)'' should read ''943.16(q)''.

**§ 943.15 [Corrected]**

10. On page 14325, in § 943.15, in the table, in the second column, the date ''March 16, 1997'' should read ''March 26, 1997''.

**BILLING CODE 1505-01-D**

federal register

Monday
April 21, 1997

# Part II

# Legal Services Corporation

**45 CFR Part 1609**
**Fee-Generating Cases; Final Rule**

**45 CFR Part 1612**
**Restrictions on Lobbying and Certain Other Activities; Final Rule**

**45 CFR Part 1620**
**Priorities in Use of Resources; Final Rule and Interim Rule**

**45 CFR Part 1626**
**Restrictions on Legal Assistance to Aliens; Final Rule**

**45 CFR Part 1627**
**Subgrants and Membership Fees or Dues; Final Rule**

**45 CFR Part 1636**
**Client Identity and Statement of Facts; Final Rule**

**45 CFR Part 1637**
**Representation of Prisoners; Final Rule**

**45 CFR Part 1638**
**Restriction on Solicitation; Final Rule**

**45 CFR Part 1640**
**Application of Federal Law to LSC Recipients; Final Rule**

## LEGAL SERVICES CORPORATION

## 45 CFR Part 1609

## Fee-Generating Cases

**AGENCY:** Legal Services Corporation.

**ACTION:** Final rule.

**SUMMARY:** This final rule revises the Legal Services Corporation's (''Corporation'' or ''LSC'') regulation relating to fee-generating cases. A major revision is the removal of the old regulation's provisions on attorneys' fees. Attorneys' fees now are addressed in 45 CFR part 1642 of the Corporation's regulations. In addition, other substantive and clarifying revisions are made, some sections have been merged, and unnecessary provisions have been eliminated.

**DATES:** Effective May 21, 1997.

**FOR FURTHER INFORMATION CONTACT:** Victor M. Fortuno, General Counsel, (202) 336–8910.

**SUPPLEMENTARY INFORMATION:** This rule, which includes provisions on fee-generating cases and attorneys' fees has been under review by the Operations and Regulations Committee (''Committee'') of the LSC Board of Directors (''Board'') since September 1994. The Committee held public hearings on September 17 and October 28, 1994, and February 17, 1995, on proposed revisions. When it became apparent that Congress was considering legislation that would significantly affect this rule, the Committee suspended consideration until the new legislation became law on April 26, 1996. See Public Law 104–134, 110 Stat. 1321 (1996), the Corporation's FY 1996 appropriations act.

The new legislation did not affect this part's provisions on fee-generating cases but it did change the law on attorneys' fees by prohibiting recipients from claiming, or collecting and retaining, any attorneys' fees pursuant to any Federal or State law permitting or requiring the awarding of such fees. See § 504(a)(13) of Pub. L. 104–134. On May 19, 1996, the Committee directed LSC staff to prepare an interim rule to implement the new legislative restriction on the taking of attorneys' fees by LSC recipients. The Corporation adopted a separate rule, 45 CFR part 1642, to address the attorneys' fees issue, which was published as an interim rule on August 29, 1996.

In order to delete the attorneys' fees provisions from part 1609 and make other revisions, the Committee met on July 10 and 19, 1996, to consider draft revisions to part 1609 and make a recommendation to the Board. The Board authorized the publication of a proposed rule, which was published in the **Federal Register** for public notice and comment on August 29, 1996.

The Corporation received 37 timely comments. The Committee held public hearings on the rule on December 14, 1996, and January 5, 1997, and made revisions to the proposed rule, which they recommended to the Board. The Board adopted the Committee's recommended version on January 6, 1997, as a final rule.

This final rule deletes the attorneys' fees provisions in the old rule. The issue of attorneys' fees is now addressed in 45 CFR part 1642. This rule also retains the Corporation's longstanding definition of a ''fee-generating case,'' but has added clarification of what is not considered to be a fee-generating case. In addition, the rule has been clarified and simplified by structural and minor substantive changes. Several changes have also been made to the requirements related to the referral of cases.

A section-by-section analysis of this final rule is provided below.

*Section 1609.1 Purpose*

This section is revised to state more clearly the purposes of this regulation, which are: (1) To ensure that recipients do not use scarce resources for cases where private attorneys are available to provide effective representation, and (2) to assist eligible clients to obtain appropriate and effective legal assistance.

*Section 1609.2 Definition*

This section defines ''fee-generating case.'' The proposed rule made a technical change in numbering intended to clarify what is intended in the definition. However, the change raised comments on whether substantive changes to the definition were intended. To avoid such an interpretation, the Board rejected the changes in the proposed rule and retained the longstanding definition from the prior rule. The Board did adopt language in the proposed rule that was added to explain what is not a ''fee-generating case.'' This revision makes it clear that court appointments are not to be considered fee-generating cases, even where fees are paid, since such cases are a professional obligation. The definition also does not include situations where recipients undertake representation under a contract with a government agency or other entity in which the agency or entity pays the recipient for each case taken. Such cases are not considered fee-generating under the rule, because a contract payment does not constitute fees that come from an award to a client or attorneys' fees that come from the losing party in a case, or from public funds.

It is important to clarify that, while this rule permits recipients to provide representation in certain fee-generating cases under the conditions set out in this rule, recipients are precluded from claiming or collecting and retaining any attorneys' fees as prohibited under part 1642.

*Section 1609.3 General Requirements*

This section defines the limits within which recipients may undertake fee-generating cases. This new section reorganizes and replaces §§ 1609.3 and 1609.4 of the old rule in order to make them easier to understand. It is also retitled. The provision requiring recipients to establish procedures for the referral of fee-generating cases is deleted, and a new section on policies and procedures is added to the rule.

Paragraph (a) provides that, except as provided in paragraph (b) of this section, a recipient may undertake a fee-generating case only after the case has been rejected by the local lawyer referral service or by two private attorneys, or when neither the referral service nor two attorneys will take the case without a consultation fee. The old rule stated that ''neither the referral service nor any attorney will consider the case without payment of a consultation fee.'' [emphasis added] The old rule set up an impossible standard for a recipient to meet, and the Board has decided that the standard in this final rule is reasonable and consistent with the rule's purposes.

Paragraph (b) clarifies when a recipient may undertake a fee-generating case without first attempting to refer the case to the private bar. The first situation is delineated in § 1609.3(b)(1). The proposed rule would have revised this section to include any cases which, like Social Security cases, meet the terms of the underlying statutory provision, § 1007(b)(1) of the Legal Services Corporation Act, under which the Corporation may not preclude recipients from taking ''cases in which a client seeks only statutory benefits and appropriate private representation is not available.'' 42 U.S.C. § 2996f(b)(1). The Committee sought comments in the proposed rule on whether there are other similar cases that should be treated in the same manner as Social Security cases. No comments urging extension of the provision to other types of cases were provided to the Corporation, and the Board decided to continue to limit the provision to Social Security cases. The only other similar type of case identified

to the Board was Veterans' benefits cases, and oral comments indicated that there has not been much demand for LSC program assistance in such cases. If a particular case should arise, a program could decide to take the case after attempted referral or pursuant to § 1609.3(b)(2) or (3).

Another circumstance under which a recipient may undertake a fee-generating case without first attempting to refer the case to the private bar is set out in § 1609.3(b)(2). This provision is based, in part, on a provision that appeared in the original LSC regulation adopted in 1976 that allowed a recipient to determine that the case was of the type that private attorneys did not accept or did not accept without a fee. LSC removed that provision in 1984, in part because of concern that it gave too much discretion to project directors. The final rule adopts a middle ground between the two positions. It restores to the discretion of the recipient the decision about what kinds of cases would qualify, but requires that the recipient consult with appropriate representatives of the private bar in making that determination. The recipient has the authority to determine the appropriate representatives, which could include representatives of the organized bar, the local referral service, or individual private practitioners with knowledge about practices in the area, particularly related to fee-generating matters. The provision contemplates either the governing body or the director of the recipient undertaking the consultation based on local conditions.

Finally, recipients that have State-wide, multiple or exceptionally large service areas are encouraged to make separate determinations when appropriate for different sub-areas within their total service area. For example, a area that includes a large city may have attorneys that normally accept a particular type of case, while rural areas may not.

Numerous revisions are made in the language and organization of § 1609.3(b)(3), which is based on the remaining provisions of § 1609.4 of the old rule. The old rule used the term ''free referral'' instead of ''referral to the private bar.'' The Board has decided that the term ''free referral'' was too vague and has substituted the more descriptive term, ''referral of the case to the private bar.'' This provision specifically authorizes the director of the recipient (or the director's designee) to make the determinations listed, subject to policies adopted by the recipient.

Section 1609.3(b)(3)(i) is new. It recognizes that in certain cases prior experience has shown that referral efforts would be futile. The Corporation does not wish scarce resources to be expended for efforts that the recipient knows will prove useless. This provision, which is intended to address the specific circumstances in a particular case, differs from § 1609.3(b)(2), which deals with categories of case types.

Section 1609.3(b)(3)(ii) is essentially the same as the comparable provision in the old rule. It allows a recipient to take a case if emergency circumstances require immediate action before referral procedures can be undertaken. The recipient must advise the client that, if appropriate, referral of the case will be attempted at a later time. However, any referral of the case must be done consistent with professional responsibility requirements.

Section 1609.3(b)(3)(iii) is a revised version of the old § 1609.4(b) and is included under the category of cases where the recipient's director or designee needs to make a case-by-case determination of the appropriate treatment of the case. Language on statutory fees has been added to make it clear that if adequate statutory fees are available to attract private counsel, the recipient should try to refer the case out to the private bar, regardless of whether recovery of damages is a principal object of the client's case. This was not clear under the old rule. The Board wants it to be clear that, if fees might be available sufficient to attract private counsel and the case does not fall under any of the other categories authorizing representation, the recipient is obligated to attempt referral in accordance with § 1609.3(a).

The language in the old rule relating to ancillary relief and counterclaims is deleted because it was confusing and unnecessarily complicated. Instead, this commentary includes examples of the kinds of circumstances under which the recipient's director could determine that the recovery of damages was not the principal object of the case. For example, if the principal relief sought is equitable or a declaratory judgment, inclusion of a prayer for damages would not turn the matter into a fee-generating case. Similarly, if the recipient is representing the defendant in a case, the inclusion of a counterclaim for damages to protect the defendant's rights would not make the matter a fee-generating case.

Finally, because this final rule has deleted provisions on attorneys' fees, paragraph (c) directs recipients to the Corporation's new rule on attorneys' fees, 45 CFR Part 1642.

*Section 1609.4 Recipient Policies, Procedures and Recordkeeping*

This new section requires that recipients establish written policies, procedures and recordkeeping requirements that will guide recipient staff to ensure compliance with this rule.

**Miscellaneous Changes**

Sections 1609.5 through 1609.7 of the old rule are deleted and are superseded by 45 CFR part 1642.

**List of Subjects in 45 CFR Part 1609**

Grant programs, Legal services.

For reasons set forth in the preamble, 45 CFR part 1609 is revised to read as follows:

## PART 1609—FEE–GENERATING CASES

Sec.
1609.1 Purpose.
1609.2 Definition.
1609.3 General requirements.
1609.4 Recipient policies, procedures and recordkeeping.

**Authority:** 42 U.S.C. 2996f(b)(1) and 2996e(c)(6).

### § 1609.1 Purpose.

This part is designed:

(a) To ensure that recipients do not use scarce legal services resources when private attorneys are available to provide effective representation and

(b) To assist eligible clients to obtain appropriate and effective legal assistance.

### § 1609.2 Definition.

(a) *Fee-generating case* means any case or matter which, if undertaken on behalf of an eligible client by an attorney in private practice, reasonably may be expected to result in a fee for legal services from an award to a client, from public funds or from the opposing party.

(b) *Fee-generating case* does not include a case where:

(1) A court appoints a recipient or an employee of a recipient to provide representation in a case pursuant to a statute or a court rule or practice equally applicable to all attorneys in the jurisdiction, or

(2) A recipient undertakes representation under a contract with a government agency or other entity.

### § 1609.3 General requirements.

(a) Except as provided in paragraph (b) of this section, a recipient may not provide legal assistance in a fee-generating case unless:

(1) The case has been rejected by the local lawyer referral service, or by two private attorneys; or

(2) Neither the referral service nor two private attorneys will consider the case without payment of a consultation fee.

(b) A recipient may provide legal assistance in a fee-generating case without first attempting to refer the case pursuant to paragraph (a) of this section only when:

(1) An eligible client is seeking benefits under Subchapter II of the Social Security Act, 42 U.S.C. 401 *et seq.*, as amended, Federal Old Age, Survivors, and Disability Insurance Benefits; or Subchapter XVI of the Social Security Act, 42 U.S.C. 1381 *et seq.*, as amended, Supplemental Security Income for Aged, Blind, and Disabled;

(2) The recipient, after consultation with appropriate representatives of the private bar, has determined that the type of case is one that private attorneys in the area served by the recipient ordinarily do not accept, or do not accept without prepayment of a fee; or

(3) The director of the recipient, or the director's designee, has determined that referral of the case to the private bar is not possible because:

(i) Documented attempts to refer similar cases in the past generally have been futile;

(ii) Emergency circumstances compel immediate action before referral can be made, but the client is advised that, if appropriate, and consistent with professional responsibility, referral will be attempted at a later time; or

(iii) Recovery of damages is not the principal object of the recipient's client's case and substantial statutory attorneys' fees are not likely to be available.

(c) Recipients should refer to 45 CFR part 1642 for restrictions on claiming, or collecting and retaining attorneys' fees.

**§ 1609.4 Recipient policies, procedures and recordkeeping.**

Each recipient shall adopt written policies and procedures to guide its staff in complying with this part and shall maintain records sufficient to document the recipient's compliance with this part.

Dated: April 14, 1997.

**Victor M. Fortuno,**

*General Counsel.*

[FR Doc. 97–10038 Filed 4–18–97; 8:45 am]

BILLING CODE 7050–01–P

---

## LEGAL SERVICES CORPORATION

## 45 CFR Part 1612

## Restrictions on Lobbying and Certain Other Activities

**AGENCY:** Legal Services Corporation.

**ACTION:** Final rule.

**SUMMARY:** This final rule revises the Legal Services Corporation's (''Corporation'' or ''LSC'') regulation on lobbying, rulemaking and other restricted activities. It is intended to implement provisions in the Corporation's FY 1996 appropriations act that are currently incorporated by reference in the Corporation's FY 1997 appropriations act, and which prohibit recipients from engaging in agency rulemaking, legislative lobbying activity or advocacy training. The final rule also implements statutory exceptions to the prohibitions, which permit recipients to use non-LSC funds to comment on public rulemaking, respond to requests from legislative and administrative bodies, and engage in efforts to encourage State and local governments to make funds available for recipient activities. Finally, the final rule continues the pre-existing prohibitions on participation in organizing activities, public demonstrations and certain illegal activities.

**DATES:** Effective May 21, 1997.

**FOR FURTHER INFORMATION CONTACT:** Victor M. Fortuno, General Counsel (202) 336–8910.

**SUPPLEMENTARY INFORMATION:** On May 19, 1996, the Operations and Regulations Committee (''Committee'') of the LSC Board of Directors (''Board'') requested LSC staff to prepare an interim rule with a request for comments to implement §§ 504(a)(2), (3), (4), (5), (6) and (12) and 504 (b) and (e) of the Corporation's FY 1996 appropriations act, 110 Stat. 1321 (1996), prohibiting recipients from engaging in most rulemaking, lobbying and advocacy training activities. The Committee held hearings on staff proposals on July 10 and 19, 1996, and the Board adopted an interim rule on July 20, 1996, for publication in the **Federal Register**. Although the interim rule was effective upon publication, *see* 61 FR 45741 (August 29, 1996), the Corporation also solicited comments on the rule for review and consideration by the Committee and Board.

Eight written timely comments were received by the Corporation. The comments generally approved the rule, but raised technical and clarifying issues as well as substantive policy concerns, particularly about the participation of recipient attorneys in bar association activities and in certain training programs. The Committee held public hearings on the rule on December 13, 1996, and January 5, 1997, and approved revisions to the interim rule to take into account the written comments and LSC staff recommendations. The Board adopted the Committee's recommended version on January 6, 1997, as a final rule.

The Corporation's FY 1997 appropriations act became effective on October 1, 1996, *see* Pub. L. 104–208, 110 Stat. 3009. It incorporated by reference the § 504 conditions on LSC grants and other sections of the FY 1996 appropriations act implemented by this rule. Accordingly, the preamble and text of this rule continue to refer to the applicable section number of the FY 1996 appropriations act.

A section-by-section discussion of this final rule is provided below.

*Section 1612.1 Purpose*

The purpose of this rule is to ensure that LSC recipients and their employees do not engage in certain activities, including rulemaking, lobbying, grassroots lobbying, and advocacy training, banned by Section 504 in the Corporation's FY 1996 appropriations act, as incorporated by the Corporation's FY 1997 appropriations act. The rule continues existing provisions of the LSC Act that prohibit participation in public demonstrations, strikes, boycotts and organizing activities. It also provides guidance on when recipients may participate in public rulemaking, respond to requests from legislative and administrative bodies, and encourage State and local governments to make funds available to support recipient activities. In response to comments that the meaning of the term ''fundraising'' used in the interim rule was misleading, the final rule deletes the term ''fundraising'' in order to clarify that this part does not restrict efforts by recipients to engage in resource development activities. The activity that is restricted is what is commonly called ''self-interest lobbying,'' which is any effort by recipients to encourage State or local governments to appropriate funds for the financial support of recipients. This final rule prohibits the use of LSC funds by recipients for self-interest lobbying, but permits recipients to use non-LSC funds for such efforts.

*Section 1612.2 Definitions*

The final rule significantly revises the definitions that were used in prior rules in order to reflect the new statutory restrictions and thus ensure that recipients do not engage in prohibited activity, and to provide greater clarity about the scope of the restrictions. In addition, definitions have been revised or eliminated because they are no longer necessary or the prior definition was inconsistent with the common sense usage of terms (such as the term

''legislation,'' which was defined to include administrative rulemaking).

''Grassroots lobbying,'' is defined to prohibit all communications and participation in activities which are designed to influence the public to contact public officials to support or oppose pending or proposed legislation. The definition does not use the term ''publicity or propaganda,'' which was used in prior regulations, because the FY 1996 appropriations act does not use the term. However, the new definition of grassroots lobbying incorporates the definition of ''publicity or propaganda'' that was previously used. The definition also provides that ''grassroots lobbying'' does not include communications which are limited solely to reporting the content or status of, or explaining, pending or proposed legislation or regulations. The interim rule would have allowed recipients to report on the effect such legislation or regulations may have on eligible clients or on their legal representation. This final rule has deleted the reference to ''reporting on the effect of legislation'' with language that permits recipients to explain pending and proposed legislation. This change clarifies that it is appropriate for recipients to prepare communications explaining the meaning and analyzing pending or proposed legislation when communicating about such legislation, but that it is inappropriate for recipients to prepare communications that could be used for or interpreted as grassroots lobbying. Thus, a recipient's communication about pending or proposed legislation could explain what the legislation does, the changes it would make in existing laws, the problems which the proposed legislation addresses, and who would be affected by the proposal. However, recipients could not prepare communications which encourage the public to support or oppose proposed or pending legislation.

''Legislation'' means any action or proposal for action by Congress or by a State or local legislative body which is intended to prescribe law or public policy. It does not include those actions of a legislative body which adjudicate the rights of individuals under existing laws (such as action taken by a local council sitting as a Board of Zoning Appeals). The Corporation has also retained the long-standing interpretation that ''legislative bodies'' do not include Indian Tribal Councils.

''Public policy'' is defined to include an overall plan embracing the general goals and procedures of any governmental body as well as pending or proposed statutes, rules, and regulations. This term is found in this rule's section on training and is also found in the definition of ''legislation.'' As used in § 1612.8 in regard to training, the modification of the definition from the prior regulation ensures that, consistent with current law, information on existing laws and regulations may be disseminated during training programs.

The definition of ''political activity'' is eliminated from this regulation, because the provision in which it was used in the prior rule has been deleted. The provision was deleted because it did not deal with lobbying activity but rather with electoral and partisan political activities, which are governed by another LSC regulation, 45 CFR part 1608. The elimination of the term does not result in any substantive change in any restriction on political activity.

''Rulemaking'' is defined to include the customary procedures on rulemaking used by agencies, such as negotiated rulemaking and notice and comment rulemaking procedures under the Federal Administrative Procedure Act, or similar procedures used by State or local government agencies. The term includes adjudicatory proceedings that formulate or modify agency policy of general applicability and future effect, but does not include administrative proceedings that produce determinations that are of particular, rather than general, applicability, such as Social Security hearings, welfare fair hearings or granting or withholding of licenses. The definition also does not include efforts by recipients to communicate with agency personnel for the purpose of obtaining information, clarification, or interpretation of the agency's rules, regulations, guidelines, policies or practices.

The term ''public rulemaking,'' which is used in § 504(e) of 110 Stat. 1231, is defined as any rulemaking proceeding that is open to the public. The term would include proceedings that are the subject of (1) notices of proposed rulemaking published in the **Federal Register** or similar State or local journals; (2) announcements of public hearings on proposed rules or notices of proposed rulemaking, including those that are routinely sent to interested members of the public; or (3) other similar notifications to members of the public.

The term ''similar procedure,'' which is used in the prohibition on legislative lobbying in § 504(a)(4) of 110 Stat. 1321, is defined to mean a legislative process for the consideration of matters which by law must be determined by a vote of the electorate.

The Committee considered but did not include in this final rule new definitions for the terms ''employee'' and ''recipient'' in order to reflect the different types of entities which may become recipients in a system of competition. Currently, these terms are defined in 45 CFR § 1600.1. Until the Corporation makes clarifying changes in these definitions, for the purposes of this rule, the term ''recipient'' includes all types of recipients, including law firms, and the term ''employee'' includes all personnel of recipients, including partners and associates in law firms.

*Section 1612.3 Prohibited Legislative and Administrative Activities*

This section sets out the broad prohibitions on lobbying and rulemaking of §§ 504(a) (2)–(6) of 110 Stat. 1321. These prohibitions are far more extensive than those included in prior appropriations provisions or in the LSC Act, which permitted rulemaking activity and direct contact with legislators on behalf of clients or when engaged in self-interest lobbying.

While this part sets out the Corporation's general restrictions on lobbying and rulemaking, certain other LSC rules may also include lobbying restrictions specific to the activity restricted in the particular rule. See, e.g., 45 CFR part 1639 (welfare reform).

Paragraph (a) sets out the prohibitions on legislative lobbying. Paragraph (b) prohibits participation in rulemaking and efforts to influence executive orders, except as permitted in §§ 1612.5 and 1612.6. Paragraph (c) tracks § 504(a)(6) of 110 Stat. 1321, and provides that recipients may not use any funds to pay for any personal service, advertisement, telegram, telephone communication, letter, printed or written matter, or any other device associated with an activity prohibited in paragraphs (a) and (b) in this section.

*Section 1612.4 Grassroots Lobbying*

This section sets out the absolute prohibition on grassroots lobbying by a recipient and its employees. There is no exception to the prohibition on grassroots lobbying. Thus, none of the activities permitted under §§ 1612.5 or 1612.6 may include grassroots lobbying.

*Section 1612.5 Permissible Activities Using Any Funds*

As with prior regulations regarding lobbying and rulemaking, the final regulation seeks to clarify the activities that are not prohibited by the rule. This list is not intended to be exhaustive. Rather, it seeks to clarify those instances likely to raise close questions.

Paragraph (a) provides that recipients may represent eligible clients in administrative agency proceedings that

are intended to adjudicate the rights of an individual client, such as welfare and food stamp fair hearings, Social Security or SSI hearings, public housing hearings, veterans benefits hearings, unemployment insurance hearings and similar administrative adjudicatory hearings or negotiations directly involving that client's legal rights or responsibilities, including pre-litigation negotiation and negotiation in the course of litigation.

Paragraph (b) provides that an employee of a recipient may initiate or participate in any litigation challenging agency rules, regulations, guidelines or policies, unless, of course, such litigation is otherwise prohibited by law or other Corporation regulations, such as part 1639 on welfare reform or part 1617 on class actions.

Paragraph (c) includes a list of some of the other activities that are not proscribed by the prohibitions on lobbying or rulemaking. The listing includes many permissible activities that have been included in prior regulations and others about which the Corporation has received inquiries. In response to public comments, subparagraph (c)(1) was added to make clear that recipients may apply for a governmental grant or contract that is issued by a legislative body or administrative agency. Subparagraph (c)(2) provides that recipients and employees of recipients can communicate with a governmental agency for the purpose of obtaining information, clarification, or interpretation of the agency's rules, regulations, practices, or policies. Under subparagraph (c)(3), recipients and their employees can inform clients, other recipients, or attorneys representing eligible clients about new or proposed statutes, executive orders, or administrative regulations. Thus, recipients can advise clients about the effect of agency rules and policies, analyze them and explain proposed changes and their effect, and advise their clients about their right to participate on their own behalf in agency rulemaking proceedings.

Under subparagraph (c)(4), recipients and their employees may communicate directly or indirectly with the Corporation for any purpose, including commenting upon existing or proposed Corporation rules, regulations, guidelines, instructions and policies. Because the restriction applies only to contacts with government agencies and the Corporation is not a department, agency or instrumentality of the Federal Government, 42 U.S.C. 2996d(e)(1), recipients can contact LSC about any matter and comment on LSC rules, regulations or policies.

Subparagraph (c)(5) allows recipient employees to participate in bar association activities, provided that recipient resources are not used to support and the recipient is not identified with activities of bar associations that are devoted to activities prohibited by this part. This provision is a change from that in the prior rule, which permitted a recipient's employees to use recipient funds to participate in bar activities involving otherwise prohibited advocacy, provided the employee did not engage in grassroots lobbying. Although comments urged the Corporation to retain the prior rule's policy, the Board determined that a policy change was necessary, because the statutory prohibitions on lobbying and rulemaking in 110 Stat. 1321 are significantly more extensive and restrictive than in past legislation. Recognizing that recipient attorneys participate in bar association activities as members of the legal profession rather than as staff attorneys, this new provision allows recipient attorneys to participate fully and actively in bar association activities, provided that they do not use recipient resources for and do not identify the recipient with any activities devoted to activities proscribed by this part. Permissible participation may include attending meetings and serving on committees of a bar association or serving as an officer or in other leadership roles in a bar association.

The Corporation recognizes that there will be some situations where bar association activities will require the attorneys employed by a recipient to decline participation or to participate on the attorney's own time as, for example, when a bar association activity is devoted to a prohibited activity, such as participating in a meeting whose principal purpose is to determine and communicate the bar's position on pending or proposed legislation or regulations. Recipient attorneys must either decline to participate or participate solely on their own time. On the other hand, recipient attorneys could use recipient resources to attend and participate in a bar association meeting that was not focused on prohibited legislative or regulatory activity and where any discussion of prohibited activity was incidental to the decisions and actions taken at the meeting. Because it is not possible to craft a bright line between permissible and impermissible bar association activities, attorneys employed by recipients will have to exercise careful judgment when they are participating in bar association activities that may involve prohibited activities.

Subparagraph (c)(6) allows recipients and their employees to advise a client of the client's right to communicate directly with an elected official. For example, recipient staff may advise specific clients whom they are representing of the identity of their elected representatives, about how legislation is enacted, and about the procedures for testifying. However, providing advice does not authorize recipient staff to prepare testimony for their clients or to conduct formal training sessions for clients on how to participate in lobbying or rulemaking.

Finally, subparagraph (c)(7) permits recipients and their employees to participate in activity related to the judiciary, such as the promulgation of court rules, rules of professional responsibility or disciplinary rules, or participating on committees appointed by the courts to advise the courts about judicial matters. However, a recipient cannot become involved in any attempt to influence a legislative body confirming judicial nominations.

*Section 1612.6 Permissible Activities Using Non-LSC Funds*

This section sets out activities authorized by §§ 504 (b) and (e) of the Corporation's FY 1996 appropriations act to be conducted with non-LSC funds. Paragraphs (a) through (e) implement § 504(e) and delineate the records required to be maintained by recipients responding to requests from appropriate officials. Paragraph (a) provides that employees of recipients may use non-LSC funds to respond to a written request from a governmental agency or official thereof, elected official, legislative body, committee, or member thereof made to the employee or to a recipient. Such response could include testifying, providing information and analyses, and participating in negotiated rulemaking. The Board deleted a reference in the interim rule to testifying or providing information to commissions, committees or advisory bodies because it judged that there was no need to single out this particular activity from the more generic listings of activities that could be undertaken in response to such a written request. The Board did not intend, however, to restrict participation on commissions, committees or advisory bodies provided that the participation is consistent with the requirements of this section. Under no circumstances may recipients engage in any grassroots lobbying when

responding to a request for information or testimony.

Paragraph (b) provides that responses to requests may be distributed only to parties that make the request or to other persons or entities to the extent that such distribution is required to comply fully with the request. For example, agencies may require specific distribution of written testimony to committee members. If required by the agency or legislative rules, such distribution would be proper.

Paragraph (c) includes the statutory restriction that no employee of the recipient shall solicit or arrange a request from any official to testify or otherwise provide information in connection with legislation or rulemaking.

In order to ensure compliance with § 504(e), paragraph (d) requires that recipients maintain copies of all written requests received by the recipient and any written responses provided, and make such requests and written responses available to monitors and other representatives of the Corporation upon request.

Paragraph (e) implements § 504(e), which provides that recipients may use non-LSC funds to provide oral or written comment to an agency and its staff in a public rulemaking proceeding. Recipients may prepare written comments in response to a Notice of Proposed Rulemaking in the **Federal Register**, in response to a similar notice in a State or local publication, or in response to any notice to the general public regarding a rulemaking proceeding that is public under State or local law. Commenting in public rulemaking, however, does not permit a recipient to engage in grassroots efforts to encourage comment by other recipients or other persons.

Paragraph (f) implements § 504(b), which permits recipients to engage in self-interest lobbying with non-LSC funds to seek funds for program activities. Under this provision, recipients may contact, communicate with, or respond to a request from a State or local government agency, a State or local legislative body or committee, or a member thereof, regarding funding for the recipient, including a pending or proposed legislative or agency proposal to fund such recipient. Consistent with § 1612.6(c)(1), writing grant proposals in response to a request for proposals is not covered by this section and is not prohibited by this part. Both LSC and non-LSC funds may be used for this activity.

*Section 1612.7 Public Demonstrations and Activities*

This section prohibits participation in public demonstrations and related activities. Two technical changes were made from the interim rule. Paragraph (a) was revised to clarify that the provision is referring to ''recipient'' resources, and the term ''person'' is used instead of ''employee.'' Thus, paragraph (a) prohibits any person from participating in public demonstrations, picketing, boycotts, or strikes (except as permitted by law in connection with the employee's own employment situation) or encouraging, directing, or coercing others to engage in such activities during working hours, while providing legal assistance or representation to the recipient's clients or while using recipient resources provided by the Corporation or private entities. This section is similar to previous regulations, but the text was rewritten to set out the prohibition more clearly.

Paragraph (b) sets out prohibitions on activities engaged in by employees at any time, whether during working hours or not. These prohibitions apply to any recipient employee and apply regardless of what source of funds is used for the employee's compensation. Thus, employees of a recipient may not engage in or encourage others to engage in (1) any rioting or civil disturbance; (2) any activity determined by a court to be in violation of an outstanding injunction of any court of competent jurisdiction; or (3) any other illegal activity that is inconsistent with an employee's responsibilities under the LSC Act, appropriation law, Corporation regulation, or the rules of professional responsibility of the jurisdiction where the recipient is located or the employee practices law.

Minor changes in the regulatory provisions have been made from the previous rule. First, the prohibition on identification of the Corporation or any recipient with any political activity was removed from Part 1612 because an identical prohibition is included in 45 CFR § 1608.4(b). In addition, the regulatory language used in § 1612.7(b)(2) now explicitly provides that it is a court, and not LSC, that should determine whether there has been a violation of an outstanding injunction. Finally, the regulation clarifies in § 1612.7(b)(3) that the prohibition against the participation by employees in other illegal activity refers to activity that violates the LSC Act or other appropriate law or the rules of professional responsibility in the jurisdiction where the recipient is located or the employee practices law. By clarifying what activity is proscribed, § 1612.7(b)(3) gives realistic guidance to recipients about what illegal activity would be deemed a violation.

Consistent with the longstanding regulatory provisions, paragraph (c) provides that the restrictions on public demonstrations, strikes and boycotts do not prohibit an attorney working for or paid by a recipient from (1) informing and advising a client about legal alternatives to litigation or the lawful conduct thereof or (2) taking such action on behalf of a client as may be required by professional responsibilities or applicable law of any State or other jurisdiction.

*Section 1612.8 Training*

This section implements the prohibitions on public policy advocacy training in § 504(a)(12) of 110 Stat. 1321 and § 1007(b)(6) of the LSC Act. Also, § 1612.8(c) of the interim rule has been moved to § 1612.8(a)(4) of this rule.

Paragraph (a) sets out the prohibitions on advocacy training, including the dissemination of information about public policies and political activities. New subparagraph (4) clarifies that recipients may not conduct a training program to train participants to engage in activities prohibited by the Act, other applicable law, or Corporation regulations, guidelines or instructions. A similar restriction was included in both the interim and prior regulations, but the Board has adopted language in this final rule which more carefully delineates the scope of the restriction. Thus, under this new formulation of the restriction, a recipient could not run a training program which included training participants about how to engage in class actions, lobbying, welfare reform and the like. This new formulation makes clear, however, that using recipient resources, recipient employees may attend and participate in training programs sponsored by bar associations or continuing legal education institutes even if a portion of the training program involved training about a prohibited activity.

Paragraph (b) tracks other provisions of § 504(a)(12) and provides that attorneys or paralegals may be trained to prepare them to (1) provide adequate legal assistance to eligible clients and (2) inform any eligible client of the client's rights under any existing statute, order or regulation, or about the meaning or significance of particular bills. In previous regulations on training, there was an explicit statement that it was permissible to train attorneys and paralegals to understand what activities are permitted or prohibited under relevant laws and regulations.

This language was removed in both the interim and final rules as unnecessary and self-evident.

*Section 1612.9 Organizing*

This section implements § 1007(b)(7), 42 U.S.C. § 2996f(b)(7), of the LSC Act which prohibits organizing activities. It is essentially the same as in the prior rule but has been restructured for clarity. The final rule makes no changes from the interim rule. Paragraph (a) provides that no funds made available by the Corporation or by private entities may be used to initiate the formation or to act as an organizer of any association, federation, labor union, coalition, network, alliance, or any similar entity. Paragraph (b) includes the two existing exceptions included in prior regulations. It first provides that the prohibition on organizing does not apply to informational meetings attended by persons engaged in the delivery of legal services at which information about new developments in law and pending cases or matters are discussed. Thus, recipients can establish or participate in task forces and other meetings of advocates to share information and develop more effective approaches to representation in particular subject areas. Paragraph (b) also provides that the prohibition does not apply to organizations composed exclusively of eligible clients formed for the purpose of advising a legal services programs about the delivery of legal services. Finally, paragraph (c) provides that the organizing prohibition does not prevent recipients and their employees from providing legal advice or assistance to eligible clients who desire to plan, establish or operate organizations, such as by preparing articles of incorporation and bylaws.

*Section 1612.10 Recordkeeping and Accounting for Activities Funded With Non-LSC Funds*

This section implements § 504(a)(6) of 110 Stat. 1321. No changes have been made from the interim rule. Thus, under paragraph (a) no LSC funds may be used to pay for administrative overhead or related costs associated with any activity permitted to be undertaken with non-LSC funds by § 1612.6.

Paragraph (b) continues existing practice that requires recipients to maintain separate records documenting the expenditure of non-LSC funds for legislative and rulemaking activities permitted by § 1612.6.

Paragraph (c) provides that recipients shall submit semi-annual reports describing their non-LSC funded legislative and rulemaking activities conducted pursuant to these regulations under § 1612.6, together with such supporting documentation as specified by the Corporation. The only change from existing policy is that the period for reporting such activities has been changed from quarterly to semi-annually in order to reduce the administrative burden on recipients.

*Section 1612.11 Recipient Policies and Procedures*

This section requires that recipients adopt written policies and procedures to guide the recipient's staff in compliance with the requirements of this part.

**Additional Changes**

The prior rule, which was superseded by the interim rule and now this final regulation, included § 1612.12, which set out enforcement procedures for part 1612. Section 1612.12 was deleted because the Corporation will be developing a comprehensive enforcement regulation that will address enforcement of all regulations and restrictions. Section 1612.13, permitting the use of private funds for certain lobbying activities, was also deleted, because, under 110 Stat. 1321, all funds of a recipient are restricted and the statutory exceptions to the prohibitions in § 1612.6 make no distinction between non-LSC public or private funds.

**List of Subjects in 45 CFR Part 1612**

Civil disorders, Grant program, Legal services, Lobbying.

For the reasons set forth in the preamble, 45 CFR part 1612 is revised to read as follows:

## PART 1612—RESTRICTIONS ON LOBBYING AND CERTAIN OTHER ACTIVITIES

Sec.

1612.1 Purpose.
1612.2 Definitions.
1612.3 Prohibited legislative and administrative activities.
1612.4 Grassroots lobbying.
1612.5 Permissible activities using any funds.
1612.6 Permissible activities using non-LSC funds.
1612.7 Public demonstrations and activities.
1612.8 Training.
1612.9 Organizing.
1612.10 Recordkeeping and accounting for activities funded with non-LSC funds.
1612.11 Recipient policies and procedures.

**Authority:** Pub. L. 104–208, 110 Stat. 3009; Pub. L. 104–134, 110 Stat. 1321, secs. 504(a)(2), (3), (4), (5), (6), and (12), 504 (b) and (e); 42 U.S.C. 2996e(b)(5), 2996f(a) (5) and (6), 2996f(b) (4), (6) and (7), and 2996g(e).

### § 1612.1 Purpose.

The purpose of this part is to ensure that LSC recipients and their employees do not engage in certain prohibited activities, including representation before legislative bodies or other direct lobbying activity, grassroots lobbying, participation in rulemaking, public demonstrations, advocacy training, and certain organizing activities. The part also provides guidance on when recipients may participate in public rulemaking or in efforts to encourage State or local governments to make funds available to support recipient activities, and when they may respond to requests of legislative and administrative officials.

### § 1612.2 Definitions.

(a) (1) *Grassroots lobbying* means any oral, written or electronically transmitted communication or any advertisement, telegram, letter, article, newsletter, or other printed or written matter or device which contains a direct suggestion to the public to contact public officials in support of or in opposition to pending or proposed legislation, regulations, executive decisions, or any decision by the electorate on a measure submitted to it for a vote. It also includes the provision of financial contributions by recipients to, or participation by recipients in, any demonstration, march, rally, fundraising drive, lobbying campaign, letter writing or telephone campaign for the purpose of influencing the course of such legislation, regulations, decisions by administrative bodies, or any decision by the electorate on a measure submitted to it for a vote.

(2) *Grassroots lobbying* does not include communications which are limited solely to reporting on the content or status of, or explaining, pending or proposed legislation or regulations.

(b) (1) *Legislation* means any action or proposal for action by Congress or by a State or local legislative body which is intended to prescribe law or public policy. The term includes, but is not limited to, action on bills, constitutional amendments, ratification of treaties and intergovernmental agreements, approval of appointments and budgets, and approval or disapproval of actions of the executive.

(2) *Legislation* not include those actions of a legislative body which adjudicate the rights of individuals under existing laws; nor does it include legislation adopted by an Indian Tribal Council.

(c) *Public policy* means an overall plan embracing the general goals and procedures of any governmental body and pending or proposed statutes, rules, and regulations.

(d) (1) *Rulemaking* means any agency process for formulating, amending, or repealing rules, regulations or guidelines of general applicability and future effect issued by the agency pursuant to Federal, State or local rulemaking procedures, including:

(i) The customary procedures that are used by an agency to formulate and adopt proposals for the issuance, amendment or revocation of regulations or other statements of general applicability and future effect, such as negotiated rulemaking and ''notice and comment'' rulemaking procedures under the Federal Administrative Procedure Act or similar procedures used by State or local government agencies; and

(ii) Adjudicatory proceedings that are formal adversarial proceedings to formulate or modify an agency policy of general applicability and future effect.

(2) *Rulemaking* does not include:

(i) Administrative proceedings that produce determinations that are of particular, rather than general, applicability and affect only the private rights, benefits or interests of individuals, such as Social Security hearings, welfare fair hearings, or granting or withholding of licenses;

(ii) Communication with agency personnel for the purpose of obtaining information, clarification, or interpretation of the agency's rules, regulations, guidelines, policies or practices.

(e) *Public rulemaking* means any rulemaking proceeding or portion of such proceeding or procedure that is open to the public through notices of proposed rulemaking published in the **Federal Register** or similar State or local journals, announcements of public hearings on proposed rules or notices of proposed rulemaking including those that are routinely sent to interested members of the public, or other similar notifications to members of the public;

(f) *Similar procedure* refers to a legislative process by which matters must be determined by a vote of the electorate.

### § 1612.3 Prohibited legislative and administrative activities.

(a) Except as provided in §§ 1612.5 and 1612.6, recipients shall not attempt to influence:

(1) The passage or defeat of any legislation or constitutional amendment;

(2) Any initiative, or any referendum or any similar procedure of the Congress, any State legislature, any local council, or any similar governing body acting in any legislative capacity;

(3) Any provision in a legislative measure appropriating funds to, or defining or limiting the functions or authority of, the recipient or the Corporation; or,

(4) The conduct of oversight proceedings concerning the recipient or the Corporation.

(b) Except as provided in §§ 1612.5 and 1612.6, recipients shall not participate in or attempt to influence any rulemaking, or attempt to influence the issuance, amendment or revocation of any executive order.

(c) Recipients shall not use any funds to pay for any personal service, advertisement, telegram, telephone communication, letter, printed or written matter, administrative expense, or related expense associated with an activity prohibited in paragraphs (a) and (b) in this section.

### § 1612.4 Grassroots lobbying.

A recipient shall not engage in any grassroots lobbying.

### § 1612.5 Permissible activities using any funds.

(a) A recipient may provide administrative representation for an eligible client in a proceeding that adjudicates the particular rights or interests of such eligible client or in negotiations directly involving that client's legal rights or responsibilities, including pre-litigation negotiation and negotiation in the course of litigation.

(b) A recipient may initiate or participate in litigation challenging agency rules, regulations, guidelines or policies, unless such litigation is otherwise prohibited by law or Corporation regulations.

(c) Nothing in this part is intended to prohibit a recipient from:

(1) Applying for a governmental grant or contract;

(2) Communicating with a governmental agency for the purpose of obtaining information, clarification, or interpretation of the agency's rules, regulations, practices, or policies;

(3) Informing clients, other recipients, or attorneys representing eligible clients about new or proposed statutes, executive orders, or administrative regulations;

(4) Communicating directly or indirectly with the Corporation for any purpose including commenting upon existing or proposed Corporation rules, regulations, guidelines, instructions and policies;

(5) Permitting its employees to participate in bar association activities, provided that recipient resources are not used to support and the recipient is not identified with activities of bar associations that are devoted to activities prohibited by this part.

(6) Advising a client of the client's right to communicate directly with an elected official; or

(7) Participating in activity related to the judiciary, such as the promulgation of court rules, rules of professional responsibility and disciplinary rules.

### § 1612.6 Permissible activities using non-LSC funds.

(a) If the conditions of paragraphs (b) and (c) of this section are met, recipients and their employees may use non-LSC funds to respond to a written request from a governmental agency or official thereof, elected official, legislative body, committee, or member thereof made to the employee, or to a recipient to:

(1) Testify orally or in writing;

(2) Provide information which may include analysis of or comments upon existing or proposed rules, regulations or legislation, or drafts of proposed rules, regulations or legislation; or

(3) Participate in negotiated rulemaking under the Negotiated Rulemaking Act of 1990, 5 U.S.C. 561, *et seq.*, or comparable State or local laws.

(b) Communications made in response to requests under paragraph (a) may be distributed only to the party or parties that made the request and to other persons or entities only to the extent that such distribution is required to comply with the request.

(c) No employee of the recipient shall solicit or arrange for a request from any official to testify or otherwise provide information in connection with legislation or rulemaking.

(d) Recipients shall maintain copies of all written requests received by the recipient and written responses made in response thereto and make such requests and written responses available to monitors and other representatives of the Corporation upon request.

(e) Recipients may use non-LSC funds to provide oral or written comment to an agency and its staff in a public rulemaking proceeding.

(f) Recipients may use non-LSC funds to contact or communicate with, or respond to a request from, a State or local government agency, a State or local legislative body or committee, or a member thereof, regarding funding for the recipient, including a pending or proposed legislative or agency proposal to fund such recipient.

### § 1612.7 Public demonstrations and activities.

(a) During working hours, while providing legal assistance or representation to the recipient's clients or while using recipient resources provided by the Corporation or by private entities, no person shall:

(1) Participate in any public demonstration, picketing, boycott, or strike, except as permitted by law in connection with the employee's own employment situation; or

(2) Encourage, direct, or coerce others to engage in such activities.

(b) No employee of a recipient shall at any time engage in or encourage others to engage in any:

(1) Rioting or civil disturbance;

(2) Activity determined by a court to be in violation of an outstanding injunction of any court of competent jurisdiction; or

(3) Other illegal activity that is inconsistent with an employee's responsibilities under applicable law, Corporation regulations, or the rules of professional responsibility of the jurisdiction where the recipient is located or the employee practices law.

(c) Nothing in this section shall prohibit an attorney from:

(1) Informing and advising a client about legal alternatives to litigation or the lawful conduct thereof; or

(2) Taking such action on behalf of a client as may be required by professional responsibilities or applicable law of any State or other jurisdiction.

**§ 1612.8 Training.**

(a) A recipient may not support or conduct training programs that:

(1) Advocate particular public policies;

(2) Encourage or facilitate political activities, labor or anti-labor activities, boycotts, picketing, strikes or demonstrations, or the development of strategies to influence legislation or rulemaking;

(3) Disseminate information about such policies or activities; or

(4) Train participants to engage in activities prohibited by the Act, other applicable law, or Corporation regulations, guidelines or instructions.

(b) Nothing in this section shall be construed to prohibit training of any attorneys or paralegals, clients, lay advocates, or others involved in the representation of eligible clients necessary for preparing them:

(1) To provide adequate legal assistance to eligible clients; or

(2) To provide advice to any eligible client as to the legal rights of the client.

**§ 1612.9 Organizing.**

(a) Recipients may not use funds provided by the Corporation or by private entities to initiate the formation, or to act as an organizer, of any association, federation, labor union, coalition, network, alliance, or any similar entity.

(b) This section shall not be construed to apply to:

(1) Informational meetings attended by persons engaged in the delivery of legal services at which information about new developments in law and pending cases or matters are discussed; or

(2) Organizations composed exclusively of eligible clients formed for the purpose of advising a legal services program about the delivery of legal services.

(c) Recipients and their employees may provide legal advice or assistance to eligible clients who desire to plan, establish or operate organizations, such as by preparing articles of incorporation and bylaws.

**§ 1612.10 Recordkeeping and accounting for activities funded with non-LSC funds.**

(a) No funds made available by the Corporation shall be used to pay for administrative overhead or related costs associated with any activity listed in § 1612.6.

(b) Recipients shall maintain separate records documenting the expenditure of non-LSC funds for legislative and rulemaking activities permitted by § 1612.6.

(c) Recipients shall submit semi-annual reports describing their legislative activities with non-LSC funds conducted pursuant to § 1612.6, together with such supporting documentation as specified by the Corporation.

**§ 1612.11 Recipient policies and procedures.**

Each recipient shall adopt written policies and procedures to guide its staff in complying with this part.

Dated: April 14, 1997.

**Victor M. Fortuno,**

*General Counsel.*

[FR Doc. 97–10037 Filed 4–18–97; 8:45 am]

BILLING CODE 7050–01–P

---

## LEGAL SERVICES CORPORATION

## 45 CFR Part 1620

## Priorities in Use of Resources

**AGENCY:** Legal Services Corporation.

**ACTION:** Final rule.

**SUMMARY:** This final rule revises the Legal Services Corporation's (''Corporation'' or ''LSC'') regulation concerning priorities. The revisions are intended to implement a restriction first appearing in the Corporation's Fiscal Year (''FY'') 1996 appropriations act that is currently incorporated by reference in the Corporation's FY 1997 appropriations act. The restriction prohibits LSC recipients from expending resources on activities that are outside their specific priorities.

**DATES:** Effective May 21, 1997.

**FOR FURTHER INFORMATION CONTACT:** Victor M. Fortuno, General Counsel, (202) 336–8910.

**SUPPLEMENTARY INFORMATION:** On May 19, 1996, the Operations and Regulations Committee (''Committee'') of the LSC Board of Directors (''Board'') requested the LSC staff to prepare an interim rule to implement § 504(a)(9), a restriction in the Corporation's FY 1996 appropriations act, Pub. L. 104–134, 110 Stat. 1321 (1996), which prohibits LSC recipients from expending resources on activities that are outside their specific priorities. The Committee held hearings on staff proposals on July 8 and 19, and the Board adopted an interim rule on July 20 for publication in the **Federal Register**. The interim rule was published on Aug. 29, 1996 (61 FR 45747), and the Corporation received 2 timely comments.

After receipt of written public comment, the Committee held public hearings on the interim rule on December 13, 1996, and January 5, 1997. The Committee made revisions to the rule and recommended the revised version to the Board. The Board adopted the revised version on January 6, 1997, for publication as a final rule in the **Federal Register**.

The Corporation's FY 1997 appropriations act became effective on October 1, 1996, see Pub. L. 104–208, 110 Stat. 3009. It incorporated by reference the § 504 condition on LSC grants included in the FY 1996 appropriations act implemented by this rule. Accordingly, the preamble and text of this rule continue to refer to the applicable section number of the FY 1996 appropriations act.

Generally, this final rule prohibits any recipient from expending time or resources on cases or matters that are not within its written priorities and explains the obligation of recipients to set specific written priorities and to assure that their staff will, except for limited emergency situations, only engage in work within the priorities.

A section-by-section discussion of this final rule is provided below.

*Section 1620.1 Purpose*

This rule is intended to clarify a recipient board's obligation to set written priorities for the use of their resources. It is also intended to permit recipients to take emergency cases outside of their priorities within the limits set out in this rule.

*Section 1620.2 Definitions*

The definitions of ''cases'' and ''matters'' are the same as those contained in the timekeeping regulation in 45 CFR part 1635 to assure consistency in the use of terminology throughout the regulations.

*Section 1620.3 Establishing Priorities*

Paragraph (a) requires recipients to adopt procedures for establishing priorities and to adopt priorities for the use of all of their resources. It also requires recipients to undertake only those cases and matters that are within their priorities. Comments expressed a concern that applicants for legal services might interpret this rule as providing an entitlement to legal assistance for any person needing representation in one of a recipient's priority areas. This was clearly not the intent of the rule. Congress did not create legal services as an entitlement program.

In order to clarify that the rule does not create an entitlement to legal services, the Board replaced ''are to be undertaken'' with ''may be undertaken.'' The rule is simply intended to ensure that each recipient focuses its resources on cases and matters that its board had determined to be a priority. It does not require recipients to represent every eligible applicant who seeks assistance, even though the applicant's case falls within the recipient's priorities. Recipients may and do utilize other case acceptance criteria in addition to their priorities statement to determine whether to represent any particular applicant whose case falls within priorities. Recipients' funds and staffing are seldom sufficient to take every applicant as a client. Some recipients rank their priorities as a way of helping them make choices among applicants, but they are not required to do so by this rule. Recipients need the additional flexibility to utilize case acceptance criteria in addition to their priorities statements, because they cannot control the volume or timing of requests for aid, nor can they always predict their funding status.

Paragraph (b) specifies that a recipient's procedures must include an appraisal of the needs of the client community in the service area based on consultation with the client community, the recipient's governing body members and employees, the private bar, and other interested persons.

Paragraph (c) sets out the factors a recipient must consider when setting priorities. The interim rule used the term ''should consider,'' which replaced ''shall consider'' in the prior rule. No substantive change in meaning was intended. However, the change in terms created some confusion over the meaning of the provision, and the Board returned to ''shall'' for the final rule.

This rule retains all of the factors in the interim rule. All except two of these factors were also found in the rule that preceded the interim rule. The first of the two new factors is the requirement to consider the suggested priorities promulgated by the Corporation pursuant to § 504(c) of Pub. L. 104–13. The second new factor is consideration of whether there is a need to vary priorities for different parts of the service area. The rule has added the consideration of whether there is a need to vary priorities for unique parts of the service area, because some recipients serve a diverse community, different parts of which have distinctive characteristics. The differences may arise because of geographic factors, such as the distinctions between rural and urban areas, or because of characteristics of the client population, such as the fact that there is a concentration of the elderly or of immigrants. Program-wide priorities may not be suitable for all recipients, and the rule allows a recipient to set different priorities for a particular segment of its service area.

The Corporation intends to revisit this section of the rule in the near future in order to consider the factors in conjunction with the criteria used in the Corporation's new competition process, see 45 CFR part 1634. If a review results in the Corporation staff making recommendations for additional changes, such changes will be presented to the Committee as a proposed rule.

*Section 1620.4 Establishing Policies and Procedures for Emergencies*

This section requires a recipient's governing body to develop procedures that the staff must follow when determining whether a particular circumstance is an emergency case that may be taken even though it falls outside of the recipient's priorities. Since the recipient is prohibited from expending its resources and time on any activities outside its priorities other than emergencies, each recipient must clearly define those emergencies to give its staff clear guidance regarding their identification and acceptance.

Several changes were made by the Board to the interim rule's version of this section. Changes were made to the section's title and to paragraph (a). Paragraph (a) of the interim rule required the adoption of ''procedures'' only. Paragraph (a) in this final rule requires that a recipient adopt ''written policies and procedures'' to guide it in undertaking emergency cases outside of its priorities. Reference to ''non-priority cases or matters'' has been added to clarify the meaning of the provision, and the examples of natural disaster or unanticipated changes in the law have been deleted and, instead, are discussed below in this commentary.

This paragraph describes emergencies as including circumstances where action must be taken in a short period of time as well as unusual and infrequent circumstances where no action needs to be initiated quickly, but where inordinate harm is likely to be incurred by the client or client's family members if action is not taken. Emergency situations might include unusual circumstances, such as a natural disaster or an unanticipated change in the law, where issues which severely affect a large segment of the client community were not anticipated at the time priorities were set. Because engaging in a comprehensive priority-setting process can be time-consuming and expensive, recipients need some flexibility to deal with significant changes in the law on an emergency basis. The recipient's board, however, should determine at the earliest opportunity whether it is appropriate to revise priorities to reflect those changes.

Paragraph (b) of the interim rule has not been retained in the final rule. The interim provision required a recipient's executive director to decide when an emergency occurs and to authorize taking the case, and suggested factors to be considered to determine what constitutes an emergency. The Board deleted the paragraph, because it decided to keep the focus of this section on the responsibilities of the governing body to establish policies and procedures. Besides, some of the factors in the paragraph are already listed in paragraph (a) of the interim rule.

*Section 1620.5 Annual Review*

This section states the obligation of the recipient's governing body to review its priorities annually, or more frequently when a significant number of similar cases have been accepted under the recipient's emergency procedures. This is most likely to happen when there is a change in law that adversely affects a large number of eligible clients. For the program to continue to accept such emergency cases, the governing body should affirmatively include a priority that encompasses those cases if the recipient is to continue accepting them. This section also sets out factors that should be considered by the governing body in determining whether to change the recipient's priorities.

*Section 1620.6 Signed Written Agreement*

This section implements § 504(a)(9) of the Corporation's appropriation's act. It clarifies that no recipient staff who works on cases or matters may engage in work outside of a recipient's adopted priorities. Each staff person that handles a case or matter or is authorized to make decisions about case acceptance must sign a written agreement not to undertake non-priority cases or matters except for those that are emergencies. This normally would not include clerical staff.

*Section 1620.7 Reporting*

Paragraph (a) reflects the requirement in § 504(9)(B) of the Corporation's FY 1996 appropriations act that a recipient must report on a quarterly basis to its governing body about the emergency work performed outside of the recipient's priorities. The report must include a rationale for taking any such non-priority cases or matters.

Paragraph (b) reflects the requirement in § 504(9)(B) that a recipient report annually to the Corporation, on a form the Corporation provides, the non-priority emergency work in which it has engaged.

Paragraph (c) contains language from the current rule instructing the recipient to report annually to the Corporation on its priorities.

**List of Subjects in 45 CFR Part 1620**

Legal services.

For reasons set forth in the preamble, 45 CFR part 1620 is revised to read as follows:

## PART 1620—PRIORITIES IN USE OF RESOURCES

Sec.
1620.1 Purpose.
1620.2 Definitions.
1620.3 Establishing priorities.
1620.4 Establishing policies and procedures for emergencies.
1620.5 Annual review.
1620.6 Signed written agreement.
1620.7 Reporting.

**Authority:** 42 U.S.C. 2996f(a)(2); Pub. L. 104–208, 110 Stat. 3009; Pub. L. 104–134,110 Stat. 1321.

### § 1620.1 Purpose.

This part is designed to provide guidance to recipients for setting priorities and to ensure that a recipient's governing body adopts written priorities for the types of cases and matters, including emergencies, to which the recipient's staff will limit its commitment of time and resources.

### § 1620.2 Definitions.

(a) A *case* is a form of program service in which an attorney or paralegal of a recipient provides legal services to one or more specific clients, including, without limitation, providing representation in litigation, administrative proceedings, and negotiations, and such actions as advice, providing brief services and transactional assistance, and assistance with individual Private Attorney Involvement (PAI) cases.

(b) A *matter* is an action which contributes to the overall delivery of program services but does not involve direct legal advice to or legal representation of one or more specific clients. Examples of matters include both direct services, such as community education presentations, operating pro se clinics, providing information about the availability of legal assistance, and developing written materials explaining legal rights and responsibilities; and indirect services, such as training, continuing legal education, general supervision of program services, preparing and disseminating desk manuals, PAI recruitment, intake when no case is undertaken, and tracking substantive law developments.

### § 1620.3 Establishing priorities.

(a) The governing body of a recipient must adopt procedures for establishing priorities for the use of all of its Corporation and non-Corporation resources and must adopt a written statement of priorities, pursuant to those procedures, that determines the cases and matters which may be undertaken by the recipient.

(b) The procedures adopted must include an effective appraisal of the needs of eligible clients in the geographic area served by the recipient, and their relative importance, based on information received from potential or current eligible clients that is solicited in a manner reasonably calculated to obtain the views of all significant segments of the client population. The appraisal must also include and be based on information from the recipient's employees, governing body members, the private bar, and other interested persons. The appraisal should address the need for outreach, training of the recipient's employees, and support services.

(c) The following factors shall be among those considered by the recipient in establishing priorities:

(1) The suggested priorities promulgated by the Legal Services Corporation;

(2) The appraisal described in paragraph (b) of this section;

(3) The population of eligible clients in the geographic areas served by the recipient, including all significant segments of that population with special legal problems or special difficulties of access to legal services;

(4) The resources of the recipient;

(5) The availability of another source of free or low-cost legal assistance in a particular category of cases or matters;

(6) The availability of other sources of training, support, and outreach services;

(7) The relative importance of particular legal problems to the individual clients of the recipient;

(8) The susceptibility of particular problems to solution through legal processes;

(9) Whether legal efforts by the recipient will complement other efforts to solve particular problems in the area served;

(10) Whether legal efforts will result in efficient and economic delivery of legal services; and

(11) Whether there is a need to establish different priorities in different parts of the recipient's service area.

### § 1620.4 Establishing policies and procedures for emergencies.

The governing body of a recipient shall adopt written policies and procedures to guide the recipient in undertaking emergency cases or matters not within the recipient's established priorities. Emergencies include those non-priority cases or matters that require immediate legal action to:

(a) Secure or preserve the necessities of life,

(b) Protect against or eliminate a significant risk to the health or safety of the client or immediate family members, or

(c) Address other significant legal issues that arise because of new and unforeseen circumstances.

### § 1620.5 Annual review.

(a) Priorities shall be set periodically and shall be reviewed by the governing body of the recipient annually or more frequently if the recipient has accepted a significant number of emergency cases outside of its priorities.

(b) The following factors should be among those considered in determining whether the recipient's priorities should be changed:

(1) The extent to which the objectives of the recipient's priorities have been accomplished;

(2) Changes in the resources of the recipient;

(3) Changes in the size, distribution, or needs of the eligible client population; and

(4) The volume of non-priority emergency cases or matters in a

particular legal area since priorities were last reviewed.

**§ 1620.6 Signed written agreement.**

All staff who handle cases or matters, or are authorized to make decisions about case acceptance, must sign a simple agreement developed by the recipient which indicates that the signatory:

(a) Has read and is familiar with the priorities of the recipient;

(b) Has read and is familiar with the definition of an emergency situation and the procedures for dealing with an emergency that have been adopted by the recipient; and

(c) Will not undertake any case or matter for the recipient that is not a priority or an emergency.

**§ 1620.7 Reporting.**

(a) The recipient shall report to the recipient's governing body on a quarterly basis information on all emergency cases or matters undertaken that were not within the recipient's priorities, and shall include a rationale for undertaking each such case or matter.

(b) The recipient shall report annually to the Corporation, on a form provided by the Corporation, information on all emergency cases or matters undertaken that were not within the recipient's priorities.

(c) The recipient shall submit to the Corporation and make available to the public an annual report summarizing the review of priorities; the date of the most recent appraisal; the timetable for the future appraisal of needs and evaluation of priorities; mechanisms which will be utilized to ensure effective client participation in priority-setting; and any changes in priorities.

Dated: April 14, 1997.

**Victor M. Fortuno,**

*General Counsel.*

[FR Doc. 97–10036 Filed 4–18–97; 8:45 am]

BILLING CODE 7050–01–P

---

## LEGAL SERVICES CORPORATION

## 45 CFR Part 1626

## Restrictions on Legal Assistance to Aliens

**AGENCY:** Legal Services Corporation.

**ACTION:** Final rule and interim rule with request for comments.

**SUMMARY:** This final rule revises the Legal Services Corporation's (''Corporation'' or ''LSC'') interim rule on legal representation of aliens. This rule is intended to implement the restrictions on alien representation in the Corporation's Fiscal Year (''FY'') 1996 appropriations act that are currently incorporated by reference into the Corporation's FY 1997 appropriations act. In general, these restrictions apply to a recipient's LSC and non-LSC funds where, under prior legislation and the prior rule, the restrictions applied only to a recipient's LSC funds. In addition, the final rule includes a number of technical and substantive revisions suggested by public comments, and substantially reorganizes portions of the rule to give it a more logical and coherent structure and to make it easier to understand and apply. Finally, this final rule incorporates provisions to implement the Kennedy Amendment, a new statutory provision permitting the use of a recipient's non-LSC funds for legal assistance to otherwise ineligible aliens who are the victims of domestic abuse. This provision was included in the Corporation's FY 1997 appropriations act, which was enacted after publication of the interim rule. Because these provisions were added after publication of the interim rule, the Corporation is publishing the Kennedy Amendment provisions as interim provisions and is requesting public comment on the manner in which the Corporation has implemented the Kennedy Amendment in this rule.

**DATES:** *Effective Dates:* The final rule is effective on May 21, 1997. The interim provisions, § 1612.2(f) and (g) and § 1612.4, are effective on April 21, 1997.

*Comments:* Comments on the interim provisions must be submitted on or before May 21, 1997.

**ADDRESSES:** Comments should be submitted to the Office of General Counsel, Legal Services Corporation, 750 First St., NE., 11th Floor, Washington, DC 20002–4250.

**FOR FURTHER INFORMATION CONTACT:** Victor Fortuno, General Counsel, (202) 336–8910.

**SUPPLEMENTARY INFORMATION:** Section 504(a)(11) of the LSC appropriations act for FY 1996, Pub. L. 104–134, 110 Stat. 1321 (1996), prohibits the Corporation from providing funding to any person or entity (''recipient'') that provides legal assistance to ineligible aliens. This restriction effectively restricts a recipient's non-LSC funds for alien representation to the same degree as LSC funds. The prior rule, promulgated in 1983, expressly allowed recipients to use their non-LSC funds to provide legal assistance to ineligible aliens.

On May 19, 1996, the Operations and Regulations Committee (''Committee'') of the LSC Board of Directors (''Board'') requested the LSC staff to prepare an interim rule to implement the restrictions in § 504(a)(11). The Committee held public hearings on staff proposals on July 9 and 10, 1996, and the Board adopted the interim rule on July 20 which was published in the **Federal Register** on August 29, 1996, at 61 FR 45750.

The interim regulation extended the restrictions on alien representation to recipients' non-LSC funds and made numerous other revisions to the prior rule to correct technical problems, to clarify several confusing provisions, and to remove outdated provisions. No other major structural revisions or substantive changes were made by the interim rule. This final rule includes changes made to the interim rule largely in response to public written and oral comments and recommendations made by the LSC staff. Public hearings were held on the rule by the Committee on December 14, 1996, and January 5, 1997, and by the LSC Board on January 6, 1997, when this final rule was adopted.

Subsequent to the publication of the interim rule, Congress passed the Corporation's 1997 appropriations act, Pub. L. 104–208, 110 Stat. 3009 (1996). That legislation amended the § 504(a)(11) restriction in the FY 1996 appropriations act to permit recipients to use non-LSC funds to serve indigent aliens who are victims of domestic abuse on matters directly related to the abuse (''Kennedy Amendment''). The Kennedy Amendment became effective on October 1, 1996, during the comment period for the interim rule. A number of comments urged incorporation of the Kennedy Amendment into the final regulations, even though the interim rule understandably made no mention of the Kennedy Amendment because the rule was published before its enactment. While the few comments the Corporation received made suggestions on how to include the Amendment into this rule, the general public was not provided notice of the Amendment. Accordingly, the Corporation requests comments on these provisions for its review and consideration. In addition, the Corporation has determined that it is necessary to publish the Kennedy Amendment provisions as interim rules, effective upon publication, in order to provide prompt and critically needed guidance to LSC recipients on the changed status of legislative requirements. LSC determined that because of the circumstances, prior notice and public comment were impracticable, unnecessary and contrary to the public interest. *See* 5 U.S.C. 553(b)(3)(B) and 553(d)(3). The Corporation intends to hold a public

hearing on the provisions and anticipates publishing a final version of the Kennedy Amendment provisions in a later rulemaking. With the exception of the Kennedy Amendment provisions, § 1626.2 (f) and (g) and § 1626.4, this rule is final.

The Corporation received 13 timely comments on the interim rule. The commenters raised a number of specific substantive issues and also suggested a need for numerous technical and structural changes to clarify or correct minor points addressed by the regulation. For the most part, the Corporation has included the suggested technical and structural revisions in this final regulation.

Most of the comments addressed four clusters of issues: (1) the need to incorporate the Kennedy Amendment into part 1626; (2) the need to provide a mechanism to update and expand the list of acceptable documents used to establish alien eligibility; (3) issues relating to verification of citizenship; and (4) the need to address the special confidentiality concerns of aliens. In addition, individual comments addressed a series of specific issues raised by the interim rule. The Corporation has addressed issues raised by the comments and includes its analysis of those issues in the section-by-section discussion of the final rule and the interim provisions provided below.

*Section 1626.1 Purpose*

The final rule revises the ''Purpose'' section of the interim rule, by stating affirmatively that the rule is intended to ensure that recipients provide legal assistance only to citizens and eligible aliens, rather than stating the purpose as a prohibition on the representation of certain aliens. It continues to be a purpose of this rule to assist recipients in determining eligibility and alien status.

*Section 1626.2 Definitions*

The final rule includes all of the definitions that were in the interim rule, but also incorporates several new definitions, including definitions of ''citizen'' and ''United States'' and terms used in the Kennedy Amendment. The definitions of ''citizen'' and ''United States'' reference the sections of the Immigration and Nationality Act (''INA'') that define those terms or describe the individuals covered by those terms for purposes of the rule. As suggested by comments, this commentary notes that persons born in Puerto Rico and the U.S. Virgin Islands are U.S. citizens. Furthermore, an individual may be a U.S. citizen even though born outside the U.S. and not naturalized. For example, persons born outside of the U.S. may have acquired U.S. citizenship at birth from their U.S. citizen parent or parents, or through naturalization of their parents.

*Sections 1626.2 (f) and (g) and § 1626.4 Kennedy Amendment Provisions*

Many of the comments specifically urged LSC to incorporate the ''Kennedy Amendment'' into the final version of Part 1626. The Amendment permits LSC recipients to use non-LSC funds to provide legal assistance to ineligible aliens who are the victims of domestic abuse when the legal assistance is ''directly related to the prevention of, or obtaining relief from,'' the abuse. All of the Kennedy Amendment provisions are published as interim rules on which the Corporation seeks public comment.

To implement the Kennedy Amendment, this rule contains two new definitions in § 1626.2 and adds applicability provisions in § 1626.4. The first new definition is found in § 1626.2(f) which defines the phrase ''battered or subjected to extreme cruelty,'' the term for domestic abuse used in the Kennedy Amendment. The Kennedy Amendment states that ''battered or subjected to extreme cruelty has the meaning given such term under regulations issued pursuant to subtitle G of the Violence Against Women Act of 1994.''

On March 26, 1996, the Immigration and Naturalization Service (''INS'') of the Department of Justice issued an interim rule which contains the definition referred to in the Kennedy Amendment. See 61 FR 13074. The regulation provides the following definition:

(vi) *Battery or extreme cruelty.* For the purpose of this chapter, the phrase ''was battered by or was the subject of extreme cruelty'' includes, but is not limited to, being the victim of any act or threatened act of violence, including any forceful detention, which results or threatens to result in physical or mental injury. Psychological or sexual abuse or exploitation, including rape, molestation, incest (if the victim is a minor), or forced prostitution shall be considered acts of violence. Other abusive actions may also be acts of violence under certain circumstances, including acts that, in and of themselves, may not initially appear violent but that are a part of an overall pattern of violence.

The INS definition is subject to change because the INS interim rule has not been finalized. Therefore, the Corporation has cited but has not included the language of the INS definition in the text of this rule. Thus, if the INS definition changes, this rule would still be correct.

The second definition is of the phrase ''legal assistance directly related to the prevention of, or obtaining relief from, the battery or cruelty'' and is found at § 1626.2(g). The comments urged the Corporation to define ''directly related'' broadly, to permit representation on a wide range of legal issues that would permit the victim of abuse to escape from the abusive situation, ameliorate the effects of the abuse, and protect against future abuse. Some of the comments suggested specific areas of legal representation that should be permitted; others urged LSC to permit any legal representation that could arguably be described as related to the abuse.

The Corporation adopted a definition that it believes is consistent with the statutory intent. The definition would allow a broad area of representation that has the specific purpose of assisting the abused spouse or child to escape from the abusive relationship, to ameliorate the effects of the abuse or to protect against future abuse. The definition, however, would not permit a recipient to use non-LSC funds to provide an ineligible alien who has suffered domestic abuse with any and all legal assistance that would fall within the recipient's priorities. To do so would ignore congressional intent and would also ignore the specific language of the exception, which permits recipients to provide only assistance that is ''directly related'' to the abuse.

Although the question of whether a particular service is directly related to the abuse will need to be made on a case-by-case basis, the following provides some guidance. First, the definition would permit a recipient to use non-LSC funds to provide assistance on a broad range of family law issues, but would not permit assistance on matters that are not directly related to the abusive relationship. For example, a recipient could provide legal assistance to seek a civil protection order against the abuser and to terminate the marriage and the parental rights of the abuser, but could not provide adoption assistance if the client remarries and the new spouse, who is also an ineligible alien, wishes to adopt the children. Similarly, the definition would permit the recipient to use non-LSC funds to provide assistance to secure housing, medical or income assistance for the abused spouse and children, so they would no longer have to be dependent on the abuser. However, absent some evidence that subsequent events were the direct result of the abuse, it would not permit them

to challenge an eviction action by a landlord for non-payment of rent, sue the agency administering the medical assistance program for failure to pay for specific care, or to challenge a cutoff of public assistance for failure to meet work requirements. Finally, the definition would permit the recipient to use non-LSC funds to assist the abused spouse or child to seek suspension of deportation, or to self-petition for immigrant status, a procedure which avoids the necessity of relying on the citizen/legal permanent resident abusive spouse or parent's willingness to file or pursue the petition on their behalf. Both of these procedures are included in the Violence Against Women Act and the interim INS regulations which implement that act. *See* 8 CFR part 204.

Section 1626.4 on applicability is a new section not found in either the interim or prior regulation. Paragraph (a) sets out the Kennedy Amendment, and paragraph (b) addresses the confidentiality concerns of otherwise ineligible aliens who may be served under the Kennedy Amendment.

As indicated above, numerous comments urged the Corporation to incorporate the Kennedy Amendment in the final rule as an exception to the restrictions on alien representation. The Kennedy Amendment is not stated as an exception. Rather, it clarifies that the restriction on alien representation in § 504(a)(11) shall not be construed to prohibit representation of persons who fall within the terms of the Kennedy Amendment. Accordingly, the Corporation decided to state that the prohibition in the rule does not apply to applicants for service who meet the criteria set out in the Kennedy Amendment. Thus, victims of abuse under the Kennedy Amendment may be represented by recipients with non-LSC funds, provided that the legal assistance is directly related to the abuse. Under this analysis, the immigration status of Kennedy Amendment clients is essentially irrelevant, because they may be served with non-LSC funds regardless of citizenship or alien status.

Section 1626.4(b) was included to address special confidentiality concerns raised by several of the comments. Those comments discussed the special needs of aliens with respect to confidentiality of information relating to immigration status. Comments particularly noted the need to protect from disclosure information provided to a recipient by (1) applicants for service who are rejected or referred to another legal services provider because they do not fall within one of the permitted categories of aliens who may be served or (2) clients who are represented using non-LSC funds under the Kennedy Amendment. In both of these situations, the information on alien status contained in intake records, which records are accessible to Federal auditors, could potentially lead to loss of employment or educational opportunities, deportation, imprisonment or other serious consequences if disclosed. Fear that such information might be revealed to the INS or other law enforcement agencies, whether or not well-founded, could discourage those aliens uncertain of their eligibility for services from seeking legal assistance for critical legal needs. The Corporation decided that part 1626 should explicitly state that recipients are not required to maintain records regarding the immigration status of clients served under the Kennedy Amendment.

Recipients are also not required to maintain immigration records for applicants who are rejected or referred to other sources of legal assistance. Section 1626.3 clarifies that normal intake and referral services are not legal assistance for the purposes of this part. In addition, the documentation requirements in §§ 1626.6 and 1626.7 specifically do not apply to persons who receive only intake or referral services.

*Section 1626.3 Prohibition*

This section restates the general prohibition on providing legal assistance to ineligible aliens included in the interim regulation. It also revises the language of the interim regulation with respect to intake and referral, making it clear that normal intake and referral of ineligible aliens do not constitute the provision of legal assistance, and is not prohibited by this part. Thus, if an ineligible alien seeks legal assistance, a recipient may complete intake and either reject the applicant or refer the applicant to a private attorney, a non-LSC funded legal services provider or a non-legal organization that provides immigration assistance. In addition, since applicants who are either rejected or referred are not covered by the prohibition, recipients are not required to maintain records of alien status for those individuals, which was a concern raised by a number of the comments and is addressed in more detail in the discussion of § 1626.4(b) above.

*Section 1626.5 Alien Status and Eligibility*

This section sets out the categories of aliens eligible for legal services. It is essentially the same as § 1626.4 of the interim regulation except that the text of § 1626.4(c) of the interim regulation has been divided into two subparagraphs in this rule for clarity. Other technical changes have also been made to the numbering and cross citations.

*Sections 1626.6, 1626.7 and 1626.8*

Section 1626.5 of the interim rule has been subdivided into §§ 1626.6, 1626.7 and 1628 in this final rule for clarity and ease of application. Section 1626.6 deals with verification of citizenship, § 1626.7 deals with eligible alien status and § 1626.8 deals with emergencies.

*Section 1626.6 Verification of Citizenship*

This section is based on § 1626.5(a) of the interim rule, but the language has been revised substantially and additional provisions have been added in response to numerous comments. This section requires applicants for service who claim to be citizens to attest in writing to the fact of their citizenship. Only when there is reason to doubt that the applicant is a citizen is the recipient required to seek documentation to verify the applicant's citizenship.

Under § 1626.5(f) of the interim regulation, no written verification of citizenship was required when only brief service and consultation by telephone, without continuing representation, was provided. This provision has been simplified and is incorporated into § 1626.6(a) of this rule with no substantive changes intended.

Several comments addressed the issue of when verification of citizenship should be required. All noted that under both the interim rule and the rule that preceded it, verification of citizenship was required only when the ''recipient has reason to doubt that a person is a United States citizen.'' The comments also made the point that, while not explicitly stated in the regulation itself, recipients are not permitted to base a determination that there is reason to doubt a person's citizenship on personal characteristics, such as the person's accent, limited English-speaking ability, appearance or race, since to do so would constitute discrimination. Several of the comments suggested that recipients need additional guidance on this issue and recommended that the regulation explicitly include language prohibiting discrimination, rather than simply including it in the commentary, as was done when part 1626 was originally promulgated in 1983. A comment submitted by the LSC Office of Inspector General (''OIG''), suggested that inclusion of such a statement would be insufficient to cure the problem of potential discrimination. The Board agreed that the text of the regulation should include a provision explicitly

prohibiting discrimination, but disagreed that recipients must verify citizenship for all applicants who claim citizenship in order to prevent any discrimination. Accordingly, the Board added a non-discrimination provision to § 1626.6(b).

To guide recipients in this matter, this commentary provides several examples of legitimate, non-discriminatory reasons to doubt that a particular applicant for service is a citizen. For example, if, in the course of an interview, an applicant who claims to be a citizen mentions having difficulties with the INS or being denied certain benefits because of alien status, the recipient should seek verification of citizenship. Similarly, if an applicant claiming citizenship specifically seeks representation in an immigration matter, the recipient should seek citizenship verification. If an applicant for services makes statements relating to the applicant's citizenship that the recipient has reason to believe are false or misleading, the applicant should seek verification. Also, if an applicant who attests to citizenship seems to be confused or misinformed about whether the steps to become a citizen have been completed, the recipient should seek verification of status.

The OIG also commented that the lack of verification of citizenship of all applicants claiming citizenship makes compliance with the prohibition on providing legal assistance to ineligible aliens virtually impossible to assess. Thus, the OIG, now charged with assessing compliance through audits, recommended that the regulation be revised to require recipients to verify citizenship in all instances where an applicant for services claims to be a citizen. The Board disagreed, because such a requirement might result in denying services to poor citizens who do not have ready access to documents such as birth certificates or passports that are needed to verify citizenship. The Board also noted that the verification procedures in the interim rule have been in place with virtually no change since 1983, and there has never been any suggestion that ineligible aliens have inappropriately received services on the basis of false claims of citizenship.

The final rule contains two additional changes that will reduce the administrative burden on recipients and applicants for service while maintaining an appropriate verification procedure. Under the previous regulation and the interim rule, the attestation was to be ''in a form approved by the Corporation.'' Section 1626.6(a) of the final rule now provides that citizenship attestation will be ''in a standard form provided by the Corporation'' and LSC plans to issue such a standard form shortly. In the meantime, recipients should continue to use their current attestation forms. Although not explicitly stated as a requirement in the rule itself, the Corporation believes that when an applicant for service is not fluent in English, the attestation form should be translated, either orally or in writing, into a language that the applicant understands.

Section 1626.6(b)(1) of the final rule permits a recipient to accept, in addition to originals or certified copies of documents, ''photocopies that appear to be complete, correct and authentic.'' Finally, subsection 1626.6(b)(2) now makes it clear that in addition to the specific documents listed, recipients ''may also accept any other authoritative document such as a document issued by INS, by a court or by any other governmental agency, that provides evidence of citizenship.''

Finally, the Corporation has long recognized that legal guardians often must act for clients who are incompetent. For example, Office of General Counsel opinions have approved such guardians acting on behalf of clients seeking assistance as eligible clients under the Corporation's poverty guidelines in 45 CFR Part 1611. Although not expressly provided for in the rule, for the purposes of this rule, an attestation of citizenship for applicants who are children and incompetent adults may be done, for example, by a parent, legal guardian, guardian ad litem, or other legal representative of the child or incompetent adult. Such attestation may not be done, however, by the recipient, even though the recipient may be the applicant's guardian for other purposes.

*Section 1626.7. Verification of Eligible Alien Status*

This section is based on §§ 1626.5(b)–(d) of the interim regulation, but it has been substantially revised in response to comments and recommendations from the LSC staff.

Under § 1626.5(f) of the interim regulation, no written verification was required when only brief service and consultation by telephone, without continuing representation, is provided. This provision has been simplified and included in § 1626.7(a) without substantive change.

Several of the comments addressed issues related to documentation of alien status for determining eligibility. The comments noted that the list of documents contained in § 1626.5(b) of the interim rule was outdated and did not include a number of the common documents currently issued by INS. In addition, the comments noted that INS frequently changes the name, number or format of the documents that it issues, and, as a result, it is difficult to maintain a current list of acceptable documents. To deal with these realities, several of the comments suggested that the list of acceptable documents be removed from the regulation and placed, instead, in an Appendix to the regulation that could be updated by the LSC staff annually, or more frequently if needed, without Board action. There is precedent for use of such an Appendix in part 1611 of the LSC regulations. Appendix A to Part 1611 contains the LSC poverty guidelines, which are based on 125% of the poverty guidelines that are issued each year by the Department of Health and Human services. The LSC staff publishes the new poverty guidelines each year in the **Federal Register** without Board action. The Corporation agreed that this approach would be preferable to the current structure, and the final rule deletes the list of documents from the text of the interim rule. An Appendix of current acceptable documents is published with this final rule. The Appendix has been provided to the Corporation by the National Immigration Law Center, Los Angeles, California. Comments on recommended revisions or additions to the Appendix will be accepted at any time by the Corporation.

The comments raised several additional issues relating to documentation of alien status. First, several comments noted that § 1626.5(b)(5) of the interim rule permitted a recipient to accept other authoritative documents issued by the INS as evidence of alien status. Pointing out that there are situations where a court or other governmental agency (e.g. State Department) may also issue such authoritative documents, comments urged that recipients be permitted to accept these as well. The Corporation agreed and § 1626.7(a)(2) of the final rule includes language that permits recipients to accept other authoritative documents such as those issued by a court or government agency other than INS.

Several of the comments also noted that eligible aliens are often unable to produce original documents as required under § 1626.5(b) of the interim regulation. Documents may be lost, stolen or destroyed. INS has a procedure for applying for replacement documents, but there is a substantial fee that indigent applicants may not be able to afford. Also, INS officials often do not

know, or do not inform applicants, about the fee waiver procedure, and it may take months for substitute documents to be provided. Comments suggested that the final rule deal with the issue of missing documents in two ways. First, commenters recommended that recipients be permitted to accept certified copies of documents or photocopies that appear to be complete, correct and authentic. The Corporation agreed and § 1626.7(a)(1) provides that such copies are acceptable documentation.

Second, commenters recommended that where eligible aliens could not produce either the original or an acceptable copy of the appropriate documents, the final rule should include a provision that permits recipients to accept either a copy of an application for replacement of the documents or a notarized statement by a third party, similar to the statement permitted for establishing citizenship, stating that the applicant for service is eligible under one or more of the categories listed in § 1626.4. Comments raised the point that the regulation should not be designed in a way that forces recipients to turn away eligible aliens who do not have the appropriate paper work. The Corporation agreed that a copy of an application for replacement of documents, if it adequately described the document, would be acceptable and would be covered by § 1626.7(a)(2). However, the Corporation rejected the suggestion that a notarized statement by a third party should be adequate to establish eligibility, since an alien eligibility determination requires careful review of specific documents and most third parties would not be adequately informed about the intricacies of immigration law to make an authoritative judgment about immigration status.

*Section 1626.8 Emergencies*

This section is based on the substantive requirements of § 1626.5(e) of the interim rule, but in response to comments, the language has been substantially revised and simplified to eliminate unnecessary complexity and confusion and to state the principles more directly. This rule now states more clearly and affirmatively that a recipient may provide emergency legal assistance without written verification of alien status, but that further representation is not permitted without appropriate documentation. The Corporation also eliminated the reference in § 1626.5(e)(3) of the interim rule to the recipients' ''criteria for emergency assistance as used in their general determination of priorities,'' because the reference no longer makes sense in light of the recent revisions made to 45 CFR Part 1620.

Although the final rule does not define ''emergency,'' in the legal services context, an emergency would be a situation where immediate action is necessary to preserve significant legal rights or prevent significant harm to a person's family, property, or other legal interests.

*Section 1626.9 Change in Circumstances*

This section is based on § 1626.6 of the interim regulation, but the language has been revised to make it clear that if the recipient learns that a client is no longer eligible for legal assistance under the rule, further representation is prohibited and the recipient must discontinue representation, although it must do so in a manner consistent with professional responsibilities.

*Section 1626.10 Special Eligibility Questions*

This section is based on the provisions of § 1626.7 of the interim regulation, but a number of revisions and additions have been made in response to comments received by the Corporation.

The comment of the Office of Inspector General stated that the interim rule had revised the provisions on special eligibility in a way that had unintended consequences. Under the prior version of part 1626, the rule stated that the restrictions on alien representation were not applicable to the legal services programs serving the listed geographic area and that citizens of those areas were eligible to receive legal assistance provided they were otherwise eligible. The rule did not explicitly state whether the legal assistance had to be provided only by recipients providing service in those areas or could be provided by other recipients as well. Under the interim rule, the restrictions on alien representation were explicitly made inapplicable to citizens of the listed geographic areas, but there was no mention of applicability to the recipients providing services in those entities. The OIG suggested that both the prior rule and the interim rule dealt with the question of special eligibility incorrectly, and urged that the final rule refer only to the legal services programs serving people who were citizens of those jurisdictions. The effect of this change would be to make financially eligible citizens of the Federated States of Micronesia, the Republic of the Marshall Islands and the Republic of Palau only eligible for legal services from the recipients serving those areas and the Commonwealth of the Northern Marianas. They would not be eligible for services from any other recipients unless they also came within one of the categories of eligible aliens listed in § 1626.5. Citizens of the Commonwealth of the Northern Mariana Islands, however, are U.S. Citizens and could be eligible for services from any LSC recipient. The Board agreed with the OIG analysis and revised § 1626.10(a) accordingly.

Another comment raised the issue of eligibility for LSC-funded services of indigent foreign nationals who seek legal assistance to obtain the return of children who were abducted from their country of residence and were brought to the U.S. for adoption. The comment noted that under the Hague Convention on the Civil Aspects of International Child Abduction (''Treaty'') and the Federal implementing statute, the International Child Abduction Remedies Act (''ICARA'') foreign nationals who reside in countries that have ratified the Treaty are eligible for Federally funded legal services as if they were U.S. nationals. This issue was addressed by the Corporation in a 1994 Office of General Counsel's opinion that concluded that part 1626 should be interpreted to permit representation of indigent persons abroad who seek to invoke the protection of the Treaty, so long as they are otherwise financially eligible. The rule has incorporated that interpretation in § 1626.10(e).

*Section 1626.11 H–2 Agricultural Workers*

This section is based on § 1626.8 of the interim regulation. The language has been revised and simplified, but no substantive changes have been made. This section sets out the eligibility requirements for H–2 workers.

*Replenishment Agricultural Workers*

One comment suggested that the provisions in § 1626.9 of the interim regulation relating to Replenishment Agricultural Workers (RAWs) should be deleted since the program was never implemented and INA § 210A(c) was repealed by § 219(ee)(1) of the Immigration and Technical Corrections Act of 1994 (Pub. L. 103–416). Accordingly, the Corporation removed the references to RAWs and deleted § 1626.9 from the interim rule.

*Section 1626.12 Recipient Policies, Procedures and Recordkeeping*

This section in the final rule is identical to § 1626.10 of the interim rule. It requires a recipient to adopt written policies and procedures to guide

its staff in complying with this part and to maintain documentation sufficient to document compliance.

**List of Subjects in 45 CFR Part 1626**

Grant programs, Legal services.

For the reasons set forth in the preamble, LSC revises 45 CFR part 1626 to read as follows:

## PART 1626—RESTRICTIONS ON LEGAL ASSISTANCE TO ALIENS

Sec.
1626.1 Purpose.
1626.2 Definitions.
1626.3 Prohibition.
1626.4 Applicability.
1626.5 Alien status and eligibility.
1626.6 Verification of citizenship.
1626.7 Verification of eligible alien status.
1626.8 Emergencies.
1626.9 Change in circumstances.
1626.10 Special eligibility questions.
1626.11 H–2 agricultural workers.
1626.12 Recipient policies, procedures and recordkeeping.

**Authority:** Pub. L. 104–208, 110 Stat. 1321; Pub. L. 104–134, 110 Stat. 3009.

### § 1626.1 Purpose.

This part is designed to ensure that recipients provide legal assistance only to citizens of the United States and eligible aliens. It is also designed to assist recipients in determining the eligibility and immigration status of persons who seek legal assistance.

### § 1626.2 Definitions.

(a) *Citizen* includes persons described or defined as citizens or nationals of the United States in 8 U.S.C. 1101(a)(22) and Title III of the Immigration and Nationality Act (INA), Chapter 1 (8 U.S.C. 1401 *et seq.*) (citizens by birth) and Chapter 2 (8 U.S.C. 1421 *et seq.*) (citizens by naturalization) or antecedent citizen statutes.

(b) *Eligible alien* means a person who is not a citizen but who meets the requirements of § 1626.5.

(c) *Ineligible alien* means a person who is not a citizen and who does not meet the requirements of § 1626.5.

(d) *Rejected* refers to an application for adjustment of status that has been denied by the Immigration and Naturalization Service (INS) and is not subject to further administrative appeal.

(e) To provide legal assistance *on behalf of* an ineligible alien is to render legal assistance to an eligible client which benefits an ineligible alien and does not affect a specific legal right or interest of the eligible client.

(f) *Battered or subjected to extreme cruelty* has the meaning given that phrase under 8 CFR part 204, the regulations issued pursuant to subtitle G of the Violence against Women Act of 1994, 108 Stat. 1953.

(g) *Legal assistance directly related to the prevention of, or obtaining relief from, the battery or cruelty* means any legal assistance that will assist victims of abuse in their escape from the abusive situation, ameliorate the current effects of the abuse, or protect against future abuse.

(h) *United States*, for purposes of this part, has the same meaning given that term in 8 U.S.C. 1101(a)(38) of the INA.

### § 1626.3 Prohibition.

Except as provided in § 1626.4, recipients may not provide legal assistance for or on behalf of an ineligible alien. For purposes of this part, legal assistance does not include normal intake and referral services.

### § 1626.4 Applicability.

(a) Except for § 1626.12, the requirements of this part do not apply to the use of non-LSC funds by a recipient to provide legal assistance to an alien:

(1) Who has been battered or subjected to extreme cruelty in the United States by a spouse or a parent, or by a member of the spouse's or parent's family residing in the same household as the alien and the spouse or parent consented or acquiesced to such battery or cruelty; or

(2) Whose child has been battered or subjected to extreme cruelty in the United States by a spouse or parent of the alien (without the active participation of the alien in the battery or extreme cruelty), or by a member of the spouse's or parent's family residing in the same household as the alien and the spouse or parent consented or acquiesced to such battery or cruelty, and the alien did not actively participate in such battery or cruelty; provided that the legal assistance is directly related to the prevention of, or obtaining relief from, the battery or cruelty.

(b) Recipients are not required by § 1626.12 to maintain records regarding the immigration status of clients represented pursuant to paragraph (a) of this section.

### § 1626.5 Alien status and eligibility.

Subject to all other eligibility requirements and restrictions of the LSC Act and regulations and other applicable law, a recipient may provide legal assistance to an alien who is present in the United States and who is within one of the following categories:

(a) An alien lawfully admitted for permanent residence as an immigrant as defined by section 1101(a)(20) of the INA (8 U.S.C. 1101(a)(20));

(b) An alien who is either married to a United States citizen or is a parent or an unmarried child under the age of 21 of such a citizen and who has filed an application for adjustment of status to permanent resident under the INA, and such application has not been rejected;

(c) An alien who is lawfully present in the United States pursuant to an admission under section 207 of the INA (8 U.S.C. 1157) (relating to refugee admissions) or who has been granted asylum by the Attorney General under section 208 of the INA (8 U.S.C. 1158).

(d) An alien who is lawfully present in the United States as a result of being granted conditional entry pursuant to section 203(a)(7) of the INA (8 U.S.C. 1153(a)(7), as in effect on March 31, 1980) before April 1, 1980, because of persecution or fear of persecution on account of race, religion, or political opinion or because of being uprooted by catastrophic natural calamity;

(e) An alien who is lawfully present in the United States as a result of the Attorney General's withholding of deportation pursuant to section 243(h) of the INA (8 U.S.C. 1253(h)); or

(f) An alien who meets the requirements of § 1626.10 or 1626.11.

### § 1626.6 Verification of citizenship.

(a) A recipient shall require all applicants for legal assistance who claim to be citizens to attest in writing in a standard form provided by the Corporation that they are citizens, unless the only service provided for a citizen is brief advice and consultation by telephone which does not include continuous representation.

(b) When a recipient has reason to doubt that an applicant is a citizen, the recipient shall require verification of citizenship. A recipient shall not consider factors such as a person's accent, limited English-speaking ability, appearance, race or national origin as a reason to doubt that the person is a citizen.

(1) If verification is required, a recipient may accept originals, certified copies, or photocopies that appear to be complete, correct and authentic of any of the following documents as evidence of citizenship:

(i) United States passport;

(ii) Birth certificate;

(iii) Naturalization certificate;

(iv) United States Citizenship Identification Card (INS Form 1–197 or I–197); or

(v) Baptismal certificate showing place of birth within the United States and date of baptism within two months after birth.

(2) A recipient may also accept any other authoritative document such as a

document issued by INS, by a court or by another governmental agency, that provides evidence of citizenship.

(3) If a person is unable to produce any of the above documents, the person may submit a notarized statement signed by a third party, who shall not be an employee of the recipient and who can produce proof of that party's own United States citizenship, that the person seeking legal assistance is a United States citizen.

**§ 1626.7 Verification of eligible alien status.**

(a) An alien seeking representation shall submit appropriate documents to verify eligibility, unless the only service provided for an eligible alien is brief advice and consultation by telephone which does not include continuous representation of a client.

(1) As proof of eligibility, a recipient may accept originals, certified copies, or photocopies that appear to be complete, correct and authentic, of any of the documents found in the appendix to this part.

(2) A recipient may also accept any other authoritative document issued by the INS, by a court or by another governmental agency, that provides evidence of alien status.

(b) A recipient shall upon request furnish each person seeking legal assistance with a list of the documents in the appendix to this part.

**§ 1626.8 Emergencies.**

In an emergency, legal services may be provided prior to compliance with §§ 1626.6 and § 1626.7 if:

(a) An applicant cannot feasibly come to the recipient's office or otherwise transmit written documentation to the recipient before commencement of the representation required by the emergency, and the applicant provides oral information to establish eligibility which the recipient records, and the applicant submits the necessary documentation as soon as possible; or

(b) An applicant is able to come to the recipient's office but cannot produce the required documentation before commencement of the representation, and the applicant signs a statement of eligibility and submits the necessary documentation as soon as possible; and

(c) The recipient informs clients accepted under paragraph (a) or (b) of this section that only limited emergency legal assistance may be provided without satisfactory documentation and that, if the client fails to produce timely and satisfactory written documentation, the recipient will be required to discontinue representation consistent with the recipient's professional responsibilities.

**§ 1626.9 Change in circumstances.**

If, to the knowledge of the recipient, a client who was an eligible alien becomes ineligible through a change in circumstances, continued representation is prohibited by this part and a recipient must discontinue representation consistent with applicable rules of professional responsibility.

**§ 1626.10 Special eligibility questions.**

(a) This part is not applicable to recipients providing services in the Commonwealth of the Northern Mariana Islands, the Republic of Palau, the Federated States of Micronesia, or the Republic of the Marshall Islands.

(b) All Canadian-born American Indians at least 50% Indian by blood are eligible to receive legal assistance provided they are otherwise eligible under the Act.

(c) Members of the Texas Band of Kickapoo are eligible to receive legal assistance provided they are otherwise eligible under the Act.

(d) An alien who qualified as a special agricultural worker and whose status is adjusted to that of temporary resident alien under the provisions of the Immigration Reform and Control Act (''IRCA'') is considered a permanent resident alien for all purposes except immigration under the provisions of section 302 of 100 Stat. 3422, 8 U.S.C. 1160(g). Since the status of these aliens is that of permanent resident alien under section 1101(a)(20) of Title 8, these workers may be provided legal assistance. These workers are ineligible for legal assistance in order to obtain the adjustment of status of temporary resident under IRCA, but are eligible for legal assistance after the application for adjustment of status to that of temporary resident has been filed, and the application has not been rejected.

(e) A recipient may provide legal assistance to indigent foreign nationals who seek assistance pursuant the Hague Convention on the Civil Aspects of International Child abduction and the Federal implementing statute, the International Child Abduction Remedies Act, 42 U.S.C. 11607(b), provided that they are otherwise financially eligible.

**§ 1626.11 H–2 Agricultural workers.**

(a) Nonimmigrant agricultural workers admitted under the provisions of 8 U.S.C. 1101(a)(15)(h)(ii), commonly called H–2 workers, may be provided legal assistance regarding the matters specified in paragraph (b) of this section.

(b) The following matters which arise under the provisions of the worker's specific employment contract may be the subject of legal assistance by an LSC-funded program:

(1) Wages;

(2) Housing;

(3) Transportation; and

(4) Other employment rights as provided in the worker's specific contract under which the nonimmigrant worker was admitted.

**§ 1626.12 Recipient policies, procedures and recordkeeping.**

Each recipient shall adopt written policies and procedures to guide its staff in complying with this part and shall maintain records sufficient to document the recipient's compliance with this part.

## Appendix To Part 1626

ALIEN ELIGIBILITY FOR REPRESENTATION BY LSC PROGRAMS

| Alien category | Immigration Act (INA) | LSC Regs 45 CFR § 1626 | Examples of acceptable documents |
|---|---|---|---|
| LAWFUL PERMANENT RESIDENT. | INA § 101(a)(20) 8 USC, § 1101(a)(20). | § 1626.5(a) | I–551 *or* I–151<br>*or* I–181 (Memorandum of Creation of Record of Lawful Permanent Residence), with approval stamp;<br>*or* passport bearing immigrant visa *or* stamp indicating admission for lawful permanent residence<br>*3or*order granting residency or suspension or adjustment of status *or* I–327 Reentry Permit<br>*or* I–94, with stamp indicating admission for lawful permanent residence<br>*or* any computerized verification from INS or other authoritative document. |
| ALIEN WHO IS<br>—married to U.S. citizen,<br>—parent of U.S. citizen, or<br>—unmarried child under 21 of U.S. citizen<br>*and*<br>—has filed an application for adjustment of status to permanent residency. | INA §§ 209, 210, 244, (replaced by INA § 240A(b) for aliens in proceedings initiated after 4/1/97), 245, 245A, 249 8 USC §§ 1159, 1160, 1259, 1254, 1255, 1255a, 1259. | § 1626.5(b) | Proof of relationship to U.S. citizen*<br>and<br>I–485 (application for adjustment of status on the basis of a family based visa, registry, Cuban Adjustment, Cuban-Haitian Adjustment, or spouses and children eligible for Violence Against Women Act relief) and proof of filing**<br>*or* I–256A or EOIR–40 (application for suspension of deportation)*** and proof of filing**<br>*or* EOIR–42 (application for cancellation of removal) and proof of filing**<br>*or* OF–230 (application at consulate for visa) and proof of filing with consulate**<br>*or* I–360 (application to qualify as abused spouse or child under the Violence Against Women Act)<br>*or* I–688B or I–766 (employment authorization document) coded 8 CFR § 274a.12(c)(9)(applicant for adjustment) or (c)(16)(registry applicant) or (c)(10)(suspension applicant)<br>*or* letter or Form I–797 from INS acknowledging receipt of I–485;<br>*or* I–94, with stamp indicated entry pursuant to advance parole (INA§ 212(d)(5)) for pending § 245;<br>*or* I–512 (advance parole), indicating entry to pursue pending § 245 application<br>*or* passport, with stamp or writing by INS officer, indicating pending § 245 application<br>*or* I–130 (visa petition) and proof of filing**<br>*or* any computerized verification from INS or other authoritative document<br>*Proof of relationship may include a copy of the alien's marriage certificate accompanied by proof of the spouse's U.S. citizenship; a copy of the birth certificate, baptismal certificate, adoption decree or other documents demonstrating that the alien is the parent of a U.S. citizen under the age of 21; a copy of the alien's birth certificate, baptismal certificate, adoption decree, or other documents demonstrating that the alien is a child under the age of 21, accompanied by proof that the alien's parent is a U.S. citizen; or in lieu of the above, a copy of INS Form I–130 (visa petition) containing information that demonstrates that the alien is related to such a U.S. citizen, accompanied by proof of filing.<br>**Proof of filing may include a fee receipt showing that the application was filed with the INS or the immigration court; a filing stamp showing that the application was filed; or a copy of the application accompanied by a notarized statement signed by the alien that such form was filed.<br>***Note: ''cancellation of removal and adjustment of status'' replaces ''suspension of deportation'' for aliens in proceedings initiated on or after April 1, 1997. |
| REFUGEE ..... | INA § 207, 8 USC § 1157. | § 1626.5(c) | I–94 or passport stamped ''refugee'' or ''§ 207''<br>*or* I–688B or I–766 coded 8 CFR § 274a.12(a)(3)(Refugee) or (a)(4)(paroled asylees)<br>*or* I–571 refugee travel document,<br>*or* any computerized verification from INS or other authoritative document. |
| ASYLEEINA ..... | § 208 8 USC § 1158 ..... | § 1626.5 (c) | I–94 or passport stamped ''asylee'' on ''§ 208''<br>or order granting asylum from INS, immigration judge, BIA, or federal court<br>or I–571 refugee travel document<br>*or* I–688B or I–766 coded 8 CFR § 274a.12(a) (5)(asylee)<br>*or* other computerized verification from INS or other authoritative document. |

ALIEN ELIGIBILITY FOR REPRESENTATION BY LSC PROGRAMS—Continued

| Alien category | Immigration Act (INA) | LSC Regs 45 CFR § 1626 | Examples of acceptable documents |
|---|---|---|---|
| GRANTING WITHHOLDING OF DEPORTATION. | INA § 243(h) 8 USC § 1253(h) (as of 4/1/97, repealed and redesignated INA § 241(b)(3), ''Restriction on Removal''). | § 1626.5(e) | I–94 stamped ''§ 243(h)'' or order granting withholding of deportation from INS, immigration court, BIA, or federal court<br>*or* I–688B or I–766 coded 8 CFR § 274a.12(a)(10)(withholding of deportation)<br>*or* I–571 refugee travel document;<br>*or* any computerized verification from INS or other authoritative document. |
| CONDITIONAL ENTRANT. | INA § 203(a)(7) (prior to 4/1/80), 8 USC § 1153(a)(7). | § 1626.5(d) | I–94 or passport stamped ''conditional entrant''<br>*or* any computerized verification from INS or other authoritative document. |
| AGRICULTURAL WORKER. | INA § 101(a)(15)(H)(II), 8 USC § 1101(a)(15)(H)(II). | § 1626.11 | I–94 or passport stamped ''H–2A''<br>*or* any computerized verification from INS or other authoritative document. |
| SPECIAL AGRICULTURAL WORKER TEMPORARY RESIDENT. | INA § 210, 8 USC § 1160. | § 1626.10(d) | I–688, 688A, 688 or 766 indicating issuance under § 210 (or under 8 CFR § 274a.12 (a)(2), with other evidence indicating eligibility under INA § 210).<br>*or* any computerized verification from INS or other authoritative document. |

National Immigration Law Center 3/7/97.

Dated: April 14, 1997.

**Victor M. Fortuno,**

*General Counsel.*

[FR Doc. 97–10035 Filed 4–18–97; 8:45 am]

BILLING CODE 7050–01–P

## LEGAL SERVICES CORPORATION

## 45 CFR Part 1627

## Subgrants and Membership Fees or Dues

**AGENCY:** Legal Services Corporation.

**ACTION:** Final rule.

**SUMMARY:** This final rule amends only the fees and dues provisions of the Legal Services Corporation's (''Corporation'' or ''LSC'') regulation concerning subgrants, fees and dues. The revisions are intended to implement a restriction contained in the Corporation's FY 1996 appropriations act which prohibits the use of LSC funds to pay membership dues to any private or nonprofit organization.

**DATES:** Effective May 21, 1997.

**FOR FURTHER INFORMATION CONTACT:** Victor M. Fortuno, General Counsel, (202) 336–8910.

**SUPPLEMENTARY INFORMATION:** On May 19, 1996, the Operations and Regulations Committee (''Committee'') of the LSC Board of Directors (''Board'') requested the LSC staff to prepare an interim rule to implement § 505, a restriction in the Corporation's FY1996 appropriations act, Pub. L. 104–134, 110 Stat. 1321 (1996), which prohibits use of LSC funds to pay dues to any private or nonprofit organization. The Committee held public hearings on July 9 and 19, and the Board adopted an interim rule on July 20 for publication in the **Federal Register**. The interim rule was published on Aug. 29, 1996 (61 FR 45753), and the Corporation received 4 timely comments.

After receipt of written public comment, the Committee held public hearings on the interim rule on December 13, 1996, and January 5, 1997. The Committee made a few revisions to the rule and recommended a revised version to the Board for final adoption on January 6, 1997. The Board made additional revisions and adopted this final rule for publication in the **Federal Register**.

The Corporation's FY 1997 appropriations act became effective on October 1, 1996, see Pub. L. 104–208, 110 Stat. 3009. It incorporated by reference the § 505 condition on LSC grants included in the FY 1996 appropriations act that is implemented by this rule. Accordingly, the preamble and text of this rule continue to refer to the applicable section number of the FY 1996 appropriations act.

This final rule revises §§ 1627.2, 1627.4, 1627.7, and 1627.8 of the rule in effect prior to the interim rule (''prior rule''). In § 1627.2, the definition of ''fees and dues'' has been replaced by a definition of ''membership fees or dues.'' Section 1627.4 has been completely revised. Section 1627.7 has been deleted, because it duplicates the training provisions in 45 CFR § 1612. Section 1627.8 has been renumbered as § 1627.7, and a new § 1627.8 is added regarding policies, procedures and recordkeeping. Also, the title of this rule has been revised to ''Subgrants and membership fees or dues.''

Generally, the revisions prohibit any use of LSC funds to pay membership dues to any private or nonprofit organization. The prior rule allowed recipients to pay such dues, subject to certain limitations as to type of organization and amount of dues. Payment of dues with non-LSC funds continues to be permitted.

Finally, §§ 1627.1, 1627.3, 1627.5 and 1627.6 are not revised or reprinted here, because they deal exclusively with subgrants. Some of the comments urged the Corporation to revise these sections, especially in light of the recent revisions made to 45 CFR Part 1610 on transfers of funds. See § 1610.7, 61 FR 63749 (Dec. 2, 1996). LSC will consider revisions to the rule's subgrant provisions in the near future.

A section-by-section discussion of the revisions is provided below.

*Section 1627.2 Definitions*

The term ''Fees and dues'' in § 1627.2(c) has been redesignated as ''membership fees or dues.'' The prior rule used the term ''fees and dues.'' The interim rule changed the term to ''dues'' because the statutory provision in § 505 refers only to ''dues'' and there is no statutory restriction on ''fees'' as previously defined in this part. Also, the definition of ''fees and dues'' was essentially a definition of ''dues.'' Deletion of the word ''fees'' in the interim rule, however, created the impression that a substantive change was intended. Because no change in meaning was intended, the Board changed the term to ''membership fees and dues,'' a term which the Board believes better illustrates the meaning of the terms used in the prior and interim rule.

The term ''membership fees and dues'' is defined as payments for

membership or to acquire voting or participatory rights in an organization. This definition does not include payments for training sessions, goods, research materials and other such services. LSC funds may be expended for such services, provided the expenditures are made in accordance with applicable regulations, including 45 CFR Part 1630.

*Section 1627.4 Membership Fees or Dues*

This section is entirely revised to prohibit any use of LSC funds for payment of membership fees or dues to private or nonprofit organizations. This prohibition includes payment of membership fees or dues for employees and volunteer attorneys to voluntary bar associations that are private or nonprofit organizations.

The prohibition in this final rule, as in the interim rule, does not apply to non-LSC funds and does not extend to the payment of dues to governmental bodies. The comments on these provisions were generally favorable, especially in regard to the provisions allowing payment of dues with LSC funds to bar associations acting in a governmental capacity. Under this rule, payment of dues to a State Supreme Court or to a bar association acting as an administrative arm of the court or in some other governmental capacity in collecting membership fees or dues that are a requirement for an attorney to practice in that State, is deemed to be payment of membership fees or dues to a governmental body, and is not prohibited by this part. A few changes have been made to add clarity. Finally, although not included in the text of the rule, the Board has directed that the prohibition not be applied to FY 1995 carryover funds that were used to pay dues prior to the August 29, 1996 publication of the interim rule.

Several provisions in the prior rule have been deleted because they are inconsistent with the new statutory prohibition. Thus, all references to the circumstances under which recipients could use LSC funds to pay for fees or dues, and all references to procedures required of recipients before they could expend funds for certain payments of fees or dues, are no longer applicable, because the new legislation prohibits the use of any LSC funds to pay dues. Thus, the provisions are no longer relevant.

*Section 1627.7 Tax Sheltered Annuities, Retirement Accounts and Pensions*

Section 1627.8 of the prior rule is now renumbered as § 1627.7.

*Section 1627.8 Recipient Policies, Procedures and Recordkeeping*

This new section requires recipients to establish policies and procedures and to maintain records to document compliance with the requirements of this part.

**List of Subjects in 45 CFR Part 1627**

Grant programs, Legal services.

For reasons set forth in the preamble, 45 CFR part 1627 is amended as follows:

## PART 1627—SUBGRANTS AND MEMBERSHIP FEES OR DUES

1. The heading of part 1627 is revised to read as set forth above.

2. The authority citation for part 1627 is revised to read as follows:

**Authority:** 42 U.S.C. 2996e(b)(1), 2996f(a), and 2996g(e); Pub. L. 104–208, 110 Stat 3009; Pub. L. 104–134, 110 Stat 1321.

3.–4. Section 1627.2 is amended by revising paragraph (c) to read as follows:

**§ 1627.2 Definitions.**

* * * * *

(c) *Membership fees or dues* as used in this part means payments to an organization on behalf of a program or individual to be a member thereof, or to acquire voting or participatory rights therein.

5. Section 1627.4 is revised to read as follows:

**§ 1627.4 Membership fees or dues.**

(a) LSC funds may not be used to pay membership fees or dues to any private or nonprofit organization, whether on behalf of a recipient or an individual.

(b) Paragraph (a) of this section does not apply to the payment of membership fees or dues mandated by a governmental organization to engage in a profession, or to the payment of membership fees or dues from non-LSC funds.

6. Section 1627.7 is revised to read as follows:

**§ 1627.7 Tax sheltered annuities, retirement accounts and pensions.**

No provision contained in this part shall be construed to affect any payment by a recipient on behalf of its employees for the purpose of contributing to or funding a tax sheltered annuity, retirement account, or pension fund.

7. Section 1627.8 is revised to read as follows:

**§ 1627.8 Recipient policies, procedures and recordkeeping.**

Each recipient shall adopt written policies and procedures to guide its staff in complying with this part and shall maintain records sufficient to document the recipient's compliance with this part.

Dated: April 14, 1997.

**Victor M. Fortuno,**

*General Counsel.*

[FR Doc. 97–10034 Filed 4–18–97; 8:45 am]

BILLING CODE 7050–01–P

---

## LEGAL SERVICES CORPORATION

## 45 CFR Part 1636

## Client Identity and Statement of Facts

**AGENCY:** Legal Services Corporation.

**ACTION:** Final rule.

**SUMMARY:** This final rule implements a restriction contained in the Legal Services Corporation's (''LSC'' or ''Corporation'') FY 1996 appropriations act that is currently incorporated by reference in the Corporation's FY 1997 appropriations act. The rule requires LSC recipients to identify by name each plaintiff they represent in any litigation. In the case of pre-litigation negotiation, the regulation requires recipients to notify potential defendants of the names of plaintiffs represented by the recipient. The rule also requires that a plaintiff sign a written statement of facts on which the plaintiff's complaint is based before the recipient engages in litigation or before it undertakes pre-litigation negotiations on the plaintiff's behalf.

**DATES:** Effective May 21, 1997.

**FOR FURTHER INFORMATION CONTACT:** Victor M. Fortuno, General Counsel, (202) 336–8910.

**SUPPLEMENTARY INFORMATION:** On May 19, 1996, the Operations and Regulations Committee (''Committee'') of the LSC Board of Directors (''Board'') requested the LSC staff to prepare an interim rule to implement § 504(a)(8), a restriction in the Corporation's FY 1996 appropriations act which requires LSC recipients to identify the plaintiffs they represent and have the plaintiffs sign written statements of the facts underlying their claims. The Committee held hearings on staff proposals on July 8 and 19, 1996. An interim rule was adopted by the Board on July 20 and was published in the **Federal Register** on August 29, 1996 (61 FR 45740), to be effective immediately. The Corporation received 9 timely comments on the interim rule. The Committee held public hearings to discuss the written comments and to hear oral comments on December 13, 1996, and January 5, 1997, and made revisions to the interim rule. The Board adopted the Committee's recommended version as a final rule on January 6, 1997.

The Corporation's FY 1997 appropriations act became effective on October 1, 1996, see Pub. L. 104–208, 110 Stat. 3009. It incorporated by reference the § 504 condition on LSC grants included in the FY 1996 appropriations act implemented by this rule. Accordingly, the preamble and text of this rule continue to refer to the applicable section number of the FY 1996 appropriations act.

Generally, this rule implements § 504(a)(8) of the Corporation's FY 1996 appropriations act, which requires recipients to identify the plaintiffs they represent when filing a complaint or initiating or participating in litigation or prior to engaging in any pre-litigation settlement negotiations with a prospective defendant, unless a court issues an order based on a finding that disclosure would cause serious harm to the plaintiff. In addition, the rule requires that, prior to entering into any pre-litigation settlement negotiations with a prospective defendant or prior to filing the complaint in court, each recipient obtain from the client being represented a signed statement of the facts supporting the complaint. The purpose of the rule is to ensure that an LSC-funded program represents eligible clients who have colorable claims when instituting litigation against or negotiating with a defendant.

A section-by-section discussion of this interim rule is provided below.

*Section 1636.1 Purpose*

The purpose of the rule is to ensure that during pre-litigation settlement negotiations with a prospective defendant and when filing a complaint in a court of law or otherwise participating in litigation against a defendant, LSC recipients identify their clients to the adverse party. The rule also seeks to ensure that recipients undertake such activities based on facts which support the complaint. This final rule revises the interim rule by adding language that clarifies that the purpose of this rule is to ensure disclosure of the plaintiff's identity to the defendant rather than to the public at large. Thus, filings in bankruptcy would not fall under this rule, because they do not implicate any defendant.

*Section 1636.2 Requirements*

This section sets forth the requirement that recipients identity plaintiffs they represent in all court complaints filed and prior to engaging in any pre-litigation settlement negotiations. The disclosure of a client's identity is not required when a court of competent jurisdiction has entered an order protecting the client from such disclosure to prevent probable, serious harm the client.

Public comments pointed out types of cases and certain situations they believed would not fall within the exception for probable serious harm but where the identities of plaintiffs should not be disclosed to the public in a complaint because they are protected by State law or court rules, or public disclosure would cause great embarrassment and humiliation. Comments pointed out, for example, that State law usually protects the identities of juveniles or persons who are mentally incompetent in such cases as guardianships, paternity actions, and juvenile court actions initiated for the protection of the child. Other comments stated that, in certain types of cases, the identity of the plaintiff is generally already known to the defendant, such as divorces and domestic violence cases, or where both parties have agreed to keep the plaintiff's identity confidential.

In response to these comments, the Board agreed to add language to allow a recipient the alternative of providing notice directly to the defendant against whom the complaint is filed where public disclosure would be contrary to law or court rules or practices. This revision is consistent with the purpose of the underlying statutory requirement, which pertains only to complaints or negotiation efforts against a defendant or prospective defendant.

One comment stated that the interim rule seemed to apply to situations where the recipient program is co-counseling with another attorney and, thus, the recipient would need to identify each plaintiff represented by all plaintiffs' attorneys to the defendants. The comment suggested language clarifying this point. The Board revised the rule to clarify that recipients need only identify clients they represent.

One comment pointed out that it is unclear that procedures exist in most jurisdictions for making a motion to the court to protect the identity of a client prior to filing a complaint. Thus, for a client who is in pre-litigation settlement negotiations, it is unclear how a recipient would obtain a court order to protect the identity of a client. The comment suggested that it would require the filing of a separate action to obtain the protective order and requiring extra litigation simply to obtain a protective order goes against judicial efficiency.

No revisions were made to the rule in response to this comment. Section 504(a)(8) applies the exception for probable serious harm to pre-litigation negotiations as well as to complaints filed in court. Therefore, the Corporation determined it has no discretion to make exceptions for pre-litigation negotiations, either to promote judicial economy or in recognition that procedures for such actions may not exist.

This section also requires that prior to the recipient's entering into any pre-litigation settlement negotiations or prior to filing the complaint in court, each recipient obtain from the client being represented a signed statement of the facts supporting the complaint. The requirement does not apply to defendants represented by a recipient for counterclaims filed against a plaintiff. Nor does it apply to a recipient's delivery of advice and brief services or to attempts to resolve matters for a client through negotiations in which there is no contemplation of litigation.

The statement of facts is to be written in English and in the client's language if the client does not understand English. If the client's language is only an oral and not a written language, such as the Navajo language, the statement in English should be certified to have been translated orally to the client prior to the client's signing.

In a few emergency situations, it may be necessary for the recipient to negotiate with a prospective defendant or to file an action before the plaintiff's statement of facts can be prepared or signed. A recipient may proceed without a signed statement in such emergencies, if delay in proceeding is reasonably likely to cause harm to a significant interest of the client. Emergency situations might include threats to take the client's child out of State, to assault the client, or to evict the client without following the required legal procedures. Where a recipient proceeds on an emergency basis, a statement must be prepared and signed as soon as practicable.

*Section 1636.3 Access to Written Statements*

This section implements the statutory provision granting a right of access to the statements of facts for certain specified governmental officials and their agents but not for adverse parties and others. Comments stated that the access provisions should be strengthened to limit any potential for abuse by parties not specifically granted access by this rule. The first comment suggested adding language stating that the access provision should not be deemed a waiver of any privilege. The second proposed that language be added referencing the rules protecting client confidentiality generally and those

governing the attorney-client privilege specifically.

In response, the Board revised § 1636.3(b) to limit access for persons and parties who are not specifically provided access under paragraph (a) of this section. The interim rule provided some protection for the statements under the discovery rule. As applied to those not identified in paragraph (a), the final rule has added the protection of other ''applicable law,'' which would include rules protecting client confidentiality generally and those governing the attorney-client privilege specifically. This language is consistent with the access requirements of paragraph (a) but also conforms to the requirement of § 1006(b)(3) in the LSC Act that the Corporation ensure that recipient activities be carried out in a manner consistent with professional responsibilities.

This section does not create any new right of access to information for parties to a lawsuit or for others, and the Corporation anticipates that, in most cases, courts will determine that statements are not discoverable by an adverse party in litigation. Recipients should draft the statements of facts, however, mindful of their local law regarding confidentiality.

A copy of each statement drafted according to this section should be maintained separate from the client's case file.

*Section 1636.4 Applicability*

This section specifies that the requirements of this part apply not only to cases handled by recipient staff but also to cases for which private attorneys are compensated by the recipient. Attorneys who are handling cases pro bono, however, are not subject to the requirements of this rule, because pro bono attorneys are uncompensated. It is the Corporation's judgment that the requirements of this part, especially the requirement for the plaintiff's statement of facts, would be a substantial impediment to the recruitment of pro bono lawyers. In addition, the fact that pro bono lawyers are volunteering their time serves as an additional impediment to their bringing frivolous law suits.

A judicare program commented that the distinction between PAI attorneys who accept a reduced fee and those who provide free representation is an artificial distinction considering that the reduced fees are insignificant amounts and do not constitute any real incentive for private attorneys to handle PAI cases. According to the program, the reduced fees should not be considered compensation significant enough to provide an exception for judicare attorneys. The Board disagreed that reduced fees to judicare attorneys are too insignificant to be considered compensation and included no exception for judicare programs.

*Section 1636.5 Recipient Policies, Procedures and Recordkeeping*

This section requires recipients to establish policies and procedures to ensure compliance with this part and to maintain records sufficient to document compliance with this part.

**List of Subjects in 45 CFR Part 1636**

Client identity, Grant programs, Legal services.

For reasons set forth in the preamble, 45 CFR part 1636 is revised as follows:

## PART 1636—CLIENT IDENTIFY AND STATEMENT OF FACTS

Sec.
1636.1 Purpose.
1636.2 Requirements.
1636.3 Access to written statements.
1636.4 Applicability.
1636.5 Recipient policies, procedures and recordkeeping.

**Authority:** Pub. L. 104–208, 110 Stat. 3009; Pub. L. 104–134, 110 Stat. 1321.

### § 1636.1 Purpose.

The purpose of this rule is to ensure that, when an LSC recipient files a complaint in a court of law or otherwise initiates or participates in litigation against a defendant or engages in pre-complaint settlement negotiations, the recipient identifies the plaintiff it represents to the defendant and ensures that the plaintiff has a colorable claim.

### § 1636.2 Requirements.

(a) When a recipient files a complaint in a court of law or otherwise initiates or participates in litigation against a defendant, or before a recipient engages in pre-complaint settlement negotiations with a prospective defendant on behalf of a client who has authorized it to file suit in the event that the settlement negotiations are unsuccessful, it shall:

(1) Identify each plaintiff it represents by name in any complaint it files, or in a separate notice provided to the defendant against whom the complaint is filed where disclosure in the complaint would be contrary to law or court rules or practice, and identify each plaintiff it represents to prospective defendants in pre-litigation settlement negotiations, unless a court of competent jurisdiction has entered an order protecting the client from such disclosure based on a finding, after notice and an opportunity for a hearing on the matter, of probable, serious harm to the plaintiff if the disclosure is not prevented; and

(2) Prepare a dated written statement signed by each plaintiff it represents, enumerating the particular facts supporting the complaint, insofar as they are known to the plaintiff when the statement is signed.

(b) The statement of facts must be written in English and, if necessary, in a language other than English that the plaintiff understands.

(c) In the event of an emergency, where the recipient reasonably believes that delay is likely to cause harm to a significant safety, property or liberty interest of the client, the recipient may proceed with the litigation or negotiation without a signed statement of facts, provided that the statement is prepared and signed as soon as possible thereafter.

### § 1636.3 Access to written statements.

(a) Written statements of facts prepared in accordance with this part are to be kept on file by the recipient and made available to the Corporation or to any Federal department or agency auditing or monitoring the activities of the recipient or to any auditor or monitor receiving Federal funds to audit or monitor on behalf of a Federal department or agency or on behalf of the Corporation.

(b) This part does not give any person or party other than those listed in paragraph (a) of this section any right of access to the plaintiff's written statement of facts, either in the lawsuit or through any other procedure. Access to the statement of facts by such other persons or parties is governed by applicable law and the discovery rules of the court in which the action is brought.

### § 1636.4 Applicability.

This part applies to cases for which private attorneys are compensated by the recipient as well as to those cases initiated by the recipient's staff.

### § 1636.5 Recipient policies, procedures and recordkeeping.

Each recipient shall adopt written policies and procedures to guide its staff in complying with this part and shall maintain records sufficient to document the recipient's compliance with this part.

Dated: April 14, 1997.

**Victor M. Fortuno,**

*General Counsel.*

[FR Doc. 97–10033 Filed 4–18–97; 8:45 am]

BILLING CODE 7050–01–P

## LEGAL SERVICES CORPORATION

## 45 CFR Part 1637

## Representation of Prisoners

**AGENCY:** Legal Services Corporation.

**ACTION:** Final rule.

**SUMMARY:** This final rule implements a restriction in the Legal Services Corporation's (''LSC'' or ''Corporation'') FY 1996 appropriations act that is currently incorporated by reference in the Corporation's FY 1997 appropriations act which prohibits recipients from participating in any civil litigation on behalf of prisoners. The restriction also prohibits recipients from providing representation to prisoners in any administrative proceeding challenging the conditions of incarceration. Finally, this rule provides guidance for recipients on how to deal with the brief incarceration of their clients.

**DATES:** Effective May 21, 1997.

**FOR FURTHER INFORMATION CONTACT:** Victor M. Fortuno, General Counsel, (202) 336–8910.

**SUPPLEMENTARY INFORMATION:** Section 504(a)(15) of the Corporation's FY 1996 appropriations act, Public Law 104–134, 110 Stat. 1321 (1996), prohibits the participation of LSC recipients in any litigation on behalf of a person incarcerated in a Federal, State or local prison. On May 19, 1996, the Operations and Regulations Committee (''Committee'') of the LSC Board of Directors (''Board'') requested the LSC staff to prepare an interim rule to implement the restriction. The Committee held hearings on staff proposals on July 9 and 19 and the Board adopted an interim rule on July 20 for publication in the **Federal Register**. The interim rule was published on August 29, 1996, at 61 FR 45754.

The Corporation received 14 timely comments on the interim rule, and the Committee held public hearings on the rule on December 13, 1996, and January 5, 1997. The Committee made a few changes and recommended a final rule, which the Board adopted on January 6, 1997, for publication as a final rule.

The Corporation's FY 1997 appropriations act became effective on October 1, 1996, see Pub. L. 104–208, 110 Stat. 3009 (1996). It incorporated by reference the § 504 condition on LSC grants included in the FY 1996 appropriations act implemented by this rule. Accordingly, the preamble and text of this rule continue to refer to the appropriate section number of the FY 1996 appropriations act.

Generally, this rule prohibits any involvement by recipients in litigation on behalf of persons who are incarcerated in Federal, State or local prisons. It also prohibits recipients from providing representation to prisoners in any administrative proceeding challenging the conditions of incarceration.

A section-by-section discussion of this final rule is provided below.

*Section 1637.1 Purpose*

This rule is intended to ensure that LSC recipients are not involved in any civil litigation on behalf of any person who is incarcerated in a Federal, State or local prison. The word ''civil'' has been added to this final rule to clarify that the restriction applies only to civil litigation. Other statutory restrictions in the LSC Act already prohibit most criminal representation by LSC recipients.

*Section 1637.2 Definitions*

The statutory restriction prohibits LSC recipients from participating in any litigation on behalf of a person who is incarcerated in a Federal, State or local prison. To provide guidance regarding the reach of this restriction, the definition section defines the terms ''incarcerated'' and ''Federal, State or local prison.'' In response to public comments on the interim rule's definitions, both technical and substantive changes have been made to these two definitions in this final rule. The technical changes have been made to delete unnecessary terms.

Many of the public comments received by the Corporation came from mental health organizations, which were concerned about the discussion in the interim rule of the definitions of ''incarcerated'' and ''Federal, State or local prison.'' The commentary stated that:

> The definitions would include persons who are held involuntarily in a mental health facility if they were committed as a result of their arrest for a crime. On the other hand, a person held in a mental health facility because of a civil commitment would not be incarcerated and could be represented.

The comments were concerned about the effect of the rule on the ability of the mentally ill to receive much needed legal assistance. Others were concerned about the stigma that would result by the association of mental illness with criminal activity.

Two specific objections were raised about the interpretation of the definitions in the commentary. First, commenters were of the view that the interpretation goes beyond the intent of the language of the underlying statute. Section 504 (a)(15) prohibits the Corporation from giving a grant to a recipient that ''participates in any litigation on behalf of a person incarcerated in a Federal, State, or local prison.'' The comments maintained that a mental health facility is not a prison. Prisons are generally understood to be penal institutions intended to house criminals, not persons with mental illnesses. One comment pointed out that, depending on the local law or police policies, persons may be arrested and charged for a minor crime, such as loitering, shoplifting, or disturbing the peace and then put in jail, only to be moved to a mental facility when they are determined to have psychological problems. Under the interim rule's interpretation, if a person were arrested under such circumstances and placed in a mental facility, that person would not be eligible for legal assistance from an LSC recipient. Another comment pointed out that such people are often indistinguishable in regard to their diagnosis or behavior from those in a mental health facility who are civilly committed. The Board agreed that the commentary's interpretation went beyond the intent of the statutory restriction and revised the definition of ''Federal, State or local prison'' so that the restriction clearly applies only to incarceration in a penal institution intended to house criminals.

The term ''Federal, State or local prison'' is thus defined in this final rule as a ''penal facility maintained under governmental authority'' and includes local jails and private facilities under contract with State corrections departments to house convicted criminals. ''Incarcerated'' is defined as ''the involuntary physical restraint of a person who has been arrested for or convicted of a crime.''

*Section 1637.3 Prohibition*

This section states the prohibition on participation in civil litigation on behalf of a person who is incarcerated in a Federal, State or local prison. It also prohibits recipients from representing such a person in any administrative proceeding challenging the conditions of incarceration.

Given the definitions in § 1637.2, the prohibition in this part would apply to pre-trial detainees even though they are persons who have not been convicted of a crime. Conversely, it would not apply to parolees and probationers, even though they are persons who have been convicted of a crime and are still under the jurisdiction of the corrections department, because they are no longer physically held in custody in a prison. The prohibition would also not apply to

juvenile offenders who have not been charged as adults because charges against juveniles are generally considered to be civil in nature. Finally, it would not apply to persons who are held involuntarily in mental health facilities.

Intermittent imprisonment poses close questions, which will be resolved on a case-by-case basis by the Corporation, determined by whether the person is predominantly incarcerated or free. For example, persons on furlough or on daytime work-release should be considered to be incarcerated; however, persons serving a term of successive weekends in prison would be considered not to be incarcerated.

*Section 1637.4 Change in Circumstances*

This section addresses the situation where there is a change of circumstances after litigation is undertaken on behalf of an eligible client and the individual becomes incarcerated. Such a change poses special practical problems. When a program learns that its client has become incarcerated in a prison, it must use its best efforts to discontinue representation of the individual. Incarceration, however, may be of short duration and, in some circumstances, by the time the recipient has succeeded in withdrawing from the matter consistent with its ethical duty to the client, the incarceration may have ended and with it the basis for the prohibition. To address such a situation, the rule provides an exception to the general prohibition. The exception would allow the continued representation by the recipient when the anticipated duration of the incarceration is likely to be brief and the litigation will outlast the period of the incarceration. As a guideline, the recipient should consider incarceration which is expected to last less than 3 months to be brief. This exception for a brief incarceration does not permit a recipient to take on new issues or matters for the client during the brief incarceration.

When incarceration has occurred after litigation has begun and its duration is uncertain, there may be circumstances where a court will not permit withdrawal in spite of the recipient's best efforts to do so, generally because withdrawal would prejudice the client and is found to be inconsistent with the recipient's professional responsibilities. One comment urged the Corporation to deal with this issue by adding language to the text. The Board determined that a commentary discussion of the matter provides sufficient guidance to recipients. The LSC Act includes provisions requiring recipients to comply with the applicable codes of professional responsibility, and it is not necessary to include a reference to that requirement in every regulation where it might apply. Accordingly, whether continued representation in such circumstances would be deemed to violate the regulation will be determined on a case-by-case basis by the Corporation. Recipients are advised to document their efforts to withdraw and renew their efforts if it appears that the incarceration will be of longer duration than originally anticipated.

During the period in which the recipient is seeking alternate counsel or other proper ways to conclude its involvement in such litigation, it may file such motions as are necessary to preserve its client's rights in the matter under litigation. The recipient may not file any additional, related claims on behalf of that client, however, unless failure to do so would jeopardize an existing claim or right of the client.

*Section 1637.5 Recipient Policies, Procedures and Recordkeeping*

This section requires recipients to establish written policies and procedures to ensure compliance with this part. Recipients are also required to maintain documentation adequate to demonstrate compliance with this part.

**List of Subjects in 45 CFR Part 1637**

Grant programs; Legal services; Prisoners

For the reasons set forth in the preamble, 45 CFR Part 1637 is revised as follows:

## PART 1637—REPRESENTATION OF PRISONERS

Sec.
1637.1 Purpose.
1637.2 Definitions.
1637.3 Prohibition.
1637.4 Change in circumstances.
1637.5 Recipient policies, procedures and recordkeeping.

**Authority:** 42 U.S.C. 2996g(e); Pub. L. 104–208, 110 Stat. 3009; Pub. L. 104–134, 110 Stat. 1321.

### § 1637.1 Purpose.

This part is intended to ensure that recipients do not participate in any civil litigation on behalf of persons incarcerated in Federal, State or local prisons.

### § 1637.2 Definitions.

(a) *Incarcerated* means the involuntary physical restraint of a person who has been arrested for or convicted of a crime.

(b) *Federal, State or local prison* means any penal facility maintained under governmental authority.

### § 1637.3 Prohibition.

A recipient may not participate in any civil litigation on behalf of a person who is incarcerated in a Federal, State or local prison, whether as a plaintiff or as a defendant, nor may a recipient participate on behalf of such an incarcerated person in any administrative proceeding challenging the conditions of incarceration.

### § 1637.4 Change in circumstances.

If, to the knowledge of the recipient, a client becomes incarcerated after litigation has commenced, the recipient must use its best efforts to withdraw promptly from the litigation, unless the period of incarceration is anticipated to be brief and the litigation is likely to continue beyond the period of incarceration.

### § 1637.5 Recipient policies, procedures and recordkeeping.

Each recipient shall adopt written policies and procedures to guide its staff in complying with this part and shall maintain records sufficient to document the recipient's compliance with this part.

Dated: April 14, 1997.

**Victor M. Fortuno,**

*General Counsel.*

[FR Doc. 97–10032 Filed 4–18–97; 8:45 am]

BILLING CODE 7050–01–P

---

## LEGAL SERVICES CORPORATION

## 45 CFR Part 1638

## Restriction on Solicitation

**AGENCY:** Legal Services Corporation.

**ACTION:** Final rule.

**SUMMARY:** This final rule implements a restriction contained in the Legal Services Corporation's (''LSC'' or ''Corporation'') FY 1996 appropriations act that is currently incorporated by reference in the Corporation's FY 1997 appropriations act, which prohibits an LSC recipient from representing an individual who had not sought legal advice from the recipient but whom the recipient advised to seek legal representation or take legal action. In addition to setting out the prohibition on solicitation, this final rule also provides guidance on activities that do not fall within the restriction, such as the representation of clients under a statutory or private ombudsman program.

**DATES:** Effective May 21, 1997.

**FOR FURTHER INFORMATION CONTACT:** Victor M. Fortuno, General Counsel, (202) 336–8910.

**SUPPLEMENTARY INFORMATION:** On May 19, 1996, the Operations and Regulations Committee (''Committee'') of the LSC Board of Directors (''Board'') requested the LSC staff to prepare an interim rule to implement § 504(a)(18), a restriction in the Corporation's FY 1996 appropriations act, Pub. L. 104–134, 110 Stat. 1321 (1996), which prohibits an LSC recipient from representing an individual who had not sought legal advice from the recipient but whom the recipient advised to seek legal representation or take legal action. The Committee held hearings on staff proposals on July 8 and 19 and the Board adopted an interim rule on July 20 for publication in the **Federal Register**. The interim rule was published on August 29, 1996 (61 FR 45755).

The Corporation received five timely comments on the interim rule, and the Committee held public hearings to discuss the written comments and to hear oral comments on December 13, 1996, and January 5, 1997. The Committee made a few changes to the interim rule and recommended a final rule to the Board, which adopted the Committee's recommendation on January 6, 1997, for publication as a final rule.

The Corporation's FY 1997 appropriations act became effective on October 1, 1996, see Pub. L. 104–208, 110 Stat. 3009 (1996). It incorporated by reference the § 504 condition on LSC grants included in the FY 1996 appropriations act implemented by this rule. Accordingly, the preamble and text of this rule continue to refer to the appropriate section number of the FY 1996 appropriations act.

Generally, this final rule prohibits LSC recipients and their employees from representing any individuals to whom they have given in-person unsolicited advice. It also prohibits recipients and their employees who have given such advice from referring the person receiving the advice to another LSC recipient.

A section-by-section discussion of this final rule is provided below.

*Section 1638.1 Purpose*

The purpose of this rule is to ensure that recipients do not obtain clients through in-person unsolicited advice to seek legal representation or to take legal action.

*Section 1638.2 Definitions*

This section defines ''in-person'' to include a face-to-face conversation and other personal contacts, such as a personal letter or telephone call. While the ordinary meaning of ''in-person'' is limited to ''face-to-face'' contacts, for the purposes of this part, a personal letter or phone call from a recipient or a recipient's employee to an individual advising that individual to obtain counsel or take legal action would constitute ''in person'' advice.

''Unsolicited advice'' is defined as advice to obtain counsel or take legal action given by a recipient or employee of a recipient to an individual with whom the recipient does not have an attorney-client relationship and who did not seek legal advice or assistance from the recipient. It does not include advice to obtain counsel or to take legal action that an individual receives from others, such as social workers, judges or neighbors.

*Section 1638.3 Prohibition*

This section prohibits LSC recipients and their employees from representing any individual to whom they have given in-person unsolicited advice. It also prohibits recipients and their employees who have given such advice from referring the person receiving the advice to another LSC recipient. A recipient may, however, refer a person who has received unsolicited advice from one of the recipient's employees to a private attorney who takes the case pro bono, but the recipient may not count the case toward its private attorney involvement requirement as set out in 45 CFR part 1614.

*Section 1638.4 Permissible Activities*

There is a continuing need for community legal education about laws that affect clients and about the service provided by the program. Representation of clients resulting from such activities does not constitute solicitation. This section explicitly notes, therefore, that it is permissible to represent individuals who seek assistance as a result of the recipient's participation in community legal education activities such as outreach activities, public service announcements, maintaining an ongoing presence in a courthouse to provide advice at the invitation of the court, disseminating community legal education publications and presentations to groups that request it. This is true even if these activities include descriptions of legal rights and responsibilities, and descriptions of the recipient's services as well as ways to access the services. An individual who seeks assistance from the recipient after involvement in one of these activities may be represented provided that the request for assistance did not result from in-person unsolicited advice.

Paragraph (c) of this section is new and was added in response to public comments which urged the Corporation to clarify that the rule would not prevent representation or referral of clients under certain ombudsman programs normally undertaken by recipients under grant or contract. Such programs are intended to provide assistance to certain vulnerable populations, such as the institutionalized or disabled. Ombudsmen are persons who are generally charged with investigating complaints about abuses by government or others, reporting findings to appropriate officials, and taking actions to bring about remedies or other equitable results.

An example in one comment described a Georgia program under which the recipient, acting as an ombudsman, investigates conditions in nursing homes and personal care homes in Atlanta. Under the program, an ombudsman responds to complaints by residents and makes unannounced visits to the homes. When the ombudsman identifies legitimate problems, the ombudsman is also required by State law and the Federal Older Americans Act to be an advocate for the residents in trying to alleviate those conditions. Part of the role as advocate is to advise residents that they should take legal action and, when necessary, refer clients to legal counsel. Specific statutory ombudsman programs referenced in the comments include the Protection and Advocacy for Individuals with Mental Illness (''PAIMI''), the Protection and Advocacy for Individual Rights (''PAIR''), the Protection and Advocacy for Persons with Developmental Disabilities (''PADD''), and the ombudsman program under the Older Americans Act.

The Board agreed with the comments and this final rule is revised to include a provision that clarifies that the prohibition in this rule does not apply to Federal and State statutory or private ombudsman programs. The purpose of § 504(a)(18) is to prevent recipients from soliciting clients by requiring that clients initiate the legal assistance. According to the legislative history of this provision, Congress determined that it is inappropriate for Federally funded legal aid offices to solicit clients at a time when programs continue to turn away clients due to lack of resources. The ombudsman programs are created by Congress and the States to provide aid and protection to certain vulnerable populations, whose members, because of disabilities or fear of repercussions,

are unable to seek the assistance they need. Under grants or contracts, LSC recipients might be expected to investigate, report and provide referral or legal assistance to these vulnerable people. Reading the restriction on solicitation together with the State and other Federal statutes establishing ombudsman programs, the Corporation believes that Congress intends § 504 to prohibit legal services programs from soliciting clients who are otherwise able to independently seek legal aid, but does not intend § 504 to prohibit assistance to those served by Federal and State statutory or private ombudsman programs for individuals who are unable to seek independently the legal and other care that they need.

*Section 1638.5 Recipient Policies*

This section requires that recipients establish written policies to implement the requirements of this part.

**List of Subjects in 45 CFR Part 1638**

Grant programs; Legal services; Solicitation.

For reasons set forth in the preamble, 45 CFR Part 1638 is revised as follows:

## PART 1638—RESTRICTION ON SOLICITATION

Sec.
1638.1 Purpose.
1638.2 Definitions.
1638.3 Prohibition.
1638.4 Permissible activities.
1638.5 Recipient policies.

**Authority:** Sec. 504(a)(18), Pub. L. 104–208, 110 Stat. 3009; Pub. L. 104–134, 110 Stat. 1321.

### § 1638.1 Purpose.

This part is designed to ensure that recipients and their employees do not solicit clients.

### § 1638.2 Definitions.

(a) *In-person* means a face-to-face encounter or a personal encounter via other means of communication such as a personal letter or telephone call.

(b) *Unsolicited advice* means advice to obtain counsel or take legal action given by a recipient or its employee to an individual who did not seek the advice and with whom the recipient does not have an attorney-client relationship.

### § 1638.3 Prohibition.

(a) Recipients and their employees are prohibited from representing a client as a result of in-person unsolicited advice.

(b) Recipients and their employees are also prohibited from referring to other recipients individuals to whom they have given in-person unsolicited advice.

### § 1638.4 Permissible activities.

(a) This part does not prohibit recipients or their employees from providing information regarding legal rights and responsibilities or providing information regarding the recipient's services and intake procedures through community legal education activities such as outreach, public service announcements, maintaining an ongoing presence in a courthouse to provide advice at the invitation of the court, disseminating community legal education publications, and giving presentations to groups that request them.

(b) A recipient may represent an otherwise eligible individual seeking legal assistance from the recipient as a result of information provided as described in § 1638.4(a), provided that the request has not resulted from in-person unsolicited advice.

(c) This part does not prohibit representation or referral of clients by recipients pursuant to a statutory or private ombudsman program that provides investigatory and referral services and/or legal assistance on behalf of persons who are unable to seek assistance on their own, including those who are institutionalized or are physically or mentally disabled.

### § 1638.5 Recipient policies.

Each recipient shall adopt written policies to implement the requirements of this part.

Dated: April 14, 1997.

**Victor M. Fortuno,**

*General Counsel.*

[FR Doc. 97–10031 Filed 4–18–97; 8:45 am]

BILLING CODE 7050–01–P

---

## LEGAL SERVICES CORPORATION

## 45 CFR Part 1640

## Application of Federal Law to LSC Recipients

**AGENCY:** Legal Services Corporation.

**ACTION:** Final rule.

**SUMMARY:** This final rule implements a provision in the Legal Services Corporation's (''Corporation'' or ''LSC'') FY 1996 appropriations act that is currently incorporated by reference in the Corporation's FY 1997 appropriations act, which subjects LSC recipients to Federal law relating to the proper use of Federal funds. This rule identifies applicable Federal law and sets out the mechanism by which recipients must agree to be subject to such law and the consequences of a violation of the law.

**EFFECTIVE DATE:** May 21, 1997.

**FOR FURTHER INFORMATION CONTACT:** Victor M. Fortuno, General Counsel, (202) 336–8910.

**SUPPLEMENTARY INFORMATION:** On May 19, 1996, the Operations and Regulations Committee (''Committee'') of the LSC Board of Directors (''Board'') requested the LSC staff to prepare an interim rule to implement § 504(a)(19) of Public Law 104–134, 110 Stat. 1321(1996), the Corporation's FY 1996 appropriations act, which required LSC-funded recipients to agree by contract that, with regard to their use of LSC funds, they would be subject to Federal law related to the proper use of Federal funds. The Committee held hearings on staff proposals on July 9 and 19, and the Board adopted an interim rule on July 20 for publication in the **Federal Register**. The interim rule was published on August 29, 1996, at 61 FR 45760.

The Corporation received five timely public comments on the rule and held public hearings on December 13, 1996 and January 5, 1997, to discuss written comments and hear oral comments. The Committee made changes and recommended a final rule to the Board which adopted the Committee's recommendation on January 6, 1997 for publication as a final rule.

The Corporation's FY 1997 appropriations act became effective on October 1, 1996, see Pub. L. 104–208, 110 Stat. 3009 (1996). It incorporated by reference the § 504 condition on LSC grants included in the FY 1996 appropriations act implemented by this rule. Accordingly, the preamble and text of this rule continue to refer to the appropriate section number of the FY 1996 appropriations act.

Briefly, this rule requires LSC recipients to agree to be subject to ''Federal laws relating to the proper use of Federal funds'' in their use of LSC funds. This rule puts recipients and their employees on notice that LSC funds are Federal funds for the purposes of the applicable Federal laws cited in this rule and that a violation of such laws would subject the recipient or individual employee to potentially serious sanctions.

A section by section analysis of this final rule is provided below.

*Section 1640.1 Purpose*

The purpose of this final rule is to ensure that recipients' LSC funds are considered Federal funds for the purposes of Federal law relating to the proper use of Federal funds. This rule also identifies applicable Federal laws and delineates the consequences to the recipient of violations of such law.

*Section 1640.2 Definitions*

The statutory restriction provides that recipients must contractually agree to be subject to ''all provisions of Federal law relating to the proper use of Federal funds'' with regard to their use of LSC funds. The regulation interprets this to mean that, with respect to their LSC funds, all programs should be subject to Federal laws which address issues of waste, fraud and abuse of Federal funds. The legislative history limits the applicable laws to those dealing with waste, fraud and abuse and specifically names the laws which apply. The House Report for H.R. 2076, an earlier unsuccessful effort to enact a provision similar to the provision that was ultimately enacted, states:

> [S]ection 504(2) requires all programs receiving Federal funds to comply with Federal statutes and regulations governing waste, fraud, and abuse of Federal funds.

H. Rep. No._____, 104th Cong., 1st Sess. 116 (July 1995). See also the McCollum/Stenholm bill (H.R. 1806), a recent effort to amend the LSC Act, which expressly cites most of the laws included in this part. Other laws have been added after consultation with the Corporation's Office of the Inspector General, one of whose statutory mandates is to prevent the misuse of LSC funds.

The relevant laws are listed in the definition of ''Federal law relating to the proper use of Federal funds'' in paragraph (a)(1) of this section. Generally, such laws deal with the bribery of public officials or witnesses; the embezzlement or theft of Federal funds; attempts to defraud the government; the obstruction of Federal audits; and making false statements and claims to the Federal government. One exception makes it clear that qui tam actions authorized by section 3730(b) of Title 31 may not be brought against the Corporation, any recipient, subrecipient, grantee, or contractor of the Corporation, or any employee thereof.

Paragraph (a)(2) clarifies that for the purposes of the laws cited in paragraph (a)(1), the Corporation shall be considered a Federal agency and its funds shall be considered to be Federal funds provided by grant or contract.

Paragraph (b) of this section defines the meaning of a ''violation of the agreement.'' A violation of a recipient's agreement to be subject to Federal law related to the proper use of Federal funds could occur in either of two ways. First, there would be a violation if the recipient were convicted of or judgment were entered against it for a violation of any of the relevant Federal laws by the Federal court having jurisdiction of the matter, and all appeals were final or the time to file for an appeal had expired.

Second, there would be a violation if an employee or board member of the recipient were convicted of a violation of the enumerated laws and the Corporation found that the offense should be imputed to the recipient because the recipient had knowingly or through gross negligence allowed the illegal activities to occur.

*Section 1640.3 Contractual Agreement*

This section implements the statutory requirement that, as a condition of receiving a grant or contract with the Corporation, recipients must enter into a contractual agreement that, in regard to LSC funds, they will be subject to Federal law relating to the proper use of Federal funds. The Federal laws in question normally apply to Federal agencies and Federal funds. Because the Corporation is not a Federal agency, it was necessary for Congress to provide in § 504(a)(19) of the Corporation's FY 1996 appropriations act that, for purposes of the application of these laws to recipients, the Corporation shall be considered to be a Federal agency and all funds provided by the Corporation shall be Federal funds provided by grant or contract. This language authorizes the application of Federal law on the proper use of Federal funds to the Corporation's recipients.

This provision also requires that the agreement include a statement that the recipient's employees and board members have been informed of the applicable Federal laws and the potential consequences to them personally and to the recipient if the law is violated. Thus, recipients should familiarize their staff and board with the Federal laws listed in this part and the significance of the agreement made by the recipient. The agreement and § 504(a)(19) mean that, in regard to its LSC funds, the recipient, its board members, and its employees could be subject to Federal criminal prosecution and civil false claims liability for a violation of the Federal statutes listed in this part.

Recipients should also be mindful of the fact that the Corporation's Office of Inspector General (''OIG'') has statutory responsibility to investigate the activities covered by the Federal laws listed in this part. Although the agreement would apply only to LSC funds, recipients are also reminded that the Corporation's OIG investigates reports of possible theft or misappropriation of a recipient's non-LSC funds as well as its LSC funds.

*Section 1640.4 Violation of Agreement*

Paragraph (a) provides that a violation of the agreement as defined in this part would render a recipient's grant or contract terminated by the Corporation. Section 504(a)(19) clearly evidences Congressional intent that a recipient's funding be terminated if there is a violation of the applicable Federal law. Because a violation pursuant to § 1640.2(b)(1) requires a recipient to have been found by a court of law to have violated the applicable Federal law, the Corporation would not be obligated to provide a hearing. For a § 1640.2(b)(2) violation, on the other hand, prior to any termination, the Corporation would be obligated to provide notice and an opportunity to be heard for the sole purpose of determining whether a recipient knowingly or through gross negligence allowed the illegal activities to occur. Once a final decision has been made to impute the violation to the recipient, the law requires that the grant or contract be terminated by the Corporation.

Comments on this section questioned whether it provides sufficient due process rights when there had been a finding by the appropriate court of a violation of applicable Federal law. When a court finds that a recipient had violated the law, the rule provides that the Corporation will terminate the recipient's grant without a hearing. When the appropriate court finds that either a recipient's employee or board member has violated the law, a hearing is required prior to termination of the recipient's grant only on the issue of whether guilt for the violation may be imputed to the recipient because the recipient knowingly or through gross negligence allowed the activities that led to the violation. Comments requested that the rule clarify that the termination proceedings in 45 CFR part 1606 would be provided in such a hearing.

The Board disagreed. Section 504(a)(19) clearly intends that once there has been a finding of a violation of the applicable Federal law, the Corporation must terminate the grant. Section 504(a) (19) provides that a violation of the applicable law ''shall render any grant or contractual agreement to provide funding null and void.'' The legislative history of this provision provides that ''any violations of federal laws shall result in termination of the contract.'' Conf. Rep. to H.R. 2076. Unlike other violations of LSC requirements, a violation of the applicable Federal law at issue in this rule is determined by a court having jurisdiction of the matter. It is not

determined under the administrative hearing rights required by Section 1011 of the LSC Act or the Corporation's rule on terminations, 45 CFR part 1606. Congress used very strong language in § 504(a)(19) by stating that a violation would require that a grant or contract would be ''null and void,'' which indicates to the Corporation that the provision overrides Section 1011 of the LSC Act. However, because the Corporation does not automatically impute guilt for a violation by a recipient employee or board member to a recipient, it has determined to provide a fair hearing to make a determination whether guilt should be imputed to the recipient. However, the Corporation does not intend that part 1606 hearing rights would be used in such a situation. Accordingly, the use of ''termination hearing'' in this section does not refer to a termination hearing under 45 CFR part 1606.

One comment expressed concern about a clause appearing in §§ 1640.4 (a) and (b), which provides that ''During the pendency of any appeal * * * the Corporation may take such steps as it determines necessary to safeguard its funds.'' The comment expressed concern that the Corporation may take steps that would undercut an appeal by prematurely terminating the operations of a recipient through immediate action, making funds completely inaccessible to the recipient. The comment suggested that the Corporation clarify that the purpose of the provision is to safeguard Corporation funds in the possession of the recipient without interfering with the capacity of clients to receive legal assistance.

The Corporation cannot anticipate that there would never be a situation where it is necessary to act immediately to make LSC funds unavailable to a recipient and, thereby, potentially interfere with a recipient's capacity to provide ongoing legal assistance activities. However, the Corporation is dedicated to ensuring the continued provision of legal assistance in each service area and would utilize the least intrusive actions necessary while protecting LSC funds and ensuring that recipients' appeal rights are not undercut. Under this final rule, the Corporation continues to have the authority and responsibility to take the steps necessary to safeguard its funds.

*Section 1640.5 Deleted*

The interim rule included a § 1640.5 on reporting requirements. It required a recipient to give telephonic or other actual notice to the Corporation within two (2) working days when the recipient or any of its employees or board members have been charged with a violation of any of the Federal laws listed in § 1640.2(a). It also clarified that ''charged with a violation'' means that an individual or governmental entity having authority to initiate such proceedings has initiated action against the recipient or its employees or board members and the proceeding is pending. It also required the recipient to report when the recipient had reason to believe that any of its employees or board members have misused LSC funds under this part.

Comments stated that the 2-day notice requirement in § 1640.5(a) was too short and that recipients needed more time to make a rational determination that there was an actual reason to believe that there had been a misuse of LSC funds in violation of the applicable Federal laws. The comments also expressed confusion on the meaning of the standard for reporting, which required a recipient to report when it had ''reason to believe'' that there has been a violation. The Committee decided to delete the entire section at the recommendation of the OIG. The OIG will rely on the good faith of the grantees and other existing means for obtaining notice of the existence of a potential problem.

**List of Subjects in 45 CFR Part 1640**

Grant programs; Legal services.

For reasons set forth in the preamble, 45 CFR Part 1640 is revised as follows:

## PART 1640—APPLICATION OF FEDERAL LAW TO LSC RECIPIENTS

Sec.
1640.1 Purpose.
1640.2 Definitions.
1640.3 Contractual agreement.
1640.4 Violation of agreement.

**Authority:** Sec. 504(a)(19), Pub. L. 104–208, 110 Stat. 3009; Pub. L. 104–134, 110 Stat. 1321.

### § 1640.1 Purpose.

The purpose of this part is to ensure that recipients use their LSC funds in accordance with Federal law related to the proper use of Federal funds. This part also identifies the Federal laws which apply, and it provides notice of the consequences to a recipient of a violation of such Federal laws by a recipient, its employees or board members.

### § 1640.2 Definitions.

(a)(1) *Federal law relating to the proper use of Federal funds* means:

(i) 18 U.S.C. 201(Bribery of Public Officials and Witnesses);

(ii) 18 U.S.C. 286 (Conspiracy to Defraud the Government With Respect to Claims);

(iii) 18 U.S.C. 287 (False, Fictitious or Fraudulent Claims);

(iv) 18 U.S.C. 371 (Conspiracy to Commit Offense or Defraud the United States);

(v) 18 U.S.C. 641 (Public Money, Property or Records);

(vi) 18 U.S.C. 1001 (Statements or Entries Generally);

(vii) 18 U.S.C. 1002 (Possession of False Papers to Defraud the United States);

(viii) 18 U.S.C. 1516 (Obstruction of Federal Audit);

(ix) 31 U.S.C. 3729 (False Claims);

(x) 31 U.S.C. 3730 (Civil Actions for False Claims), except that actions that are authorized by 31 U.S.C. 3730(b) to be brought by persons may not be brought against the Corporation, any recipient, subrecipient, grantee, or contractor of the Corporation, or any employee thereof;

(xi) 31 U.S.C. 3731 (False Claims Procedure);

(xii) 31 U.S.C. 3732 (False Claims Jurisdiction); and

(xiii) 31 U.S.C. 3733 (Civil Investigative Demands).

(2) For the purposes of the laws listed in paragraph (a)(1) of this section, LSC shall be considered a Federal agency and a recipient's LSC funds shall be considered to be Federal funds provided by grant or contract.

(b) A *violation of the agreement* means:

(1) That the recipient has been convicted of, or judgment has been entered against the recipient for, a violation of any of the laws listed in paragraph (a)(1) of this section, with respect to its LSC grant or contract, by the court having jurisdiction of the matter, and any appeals of the conviction or judgment have been exhausted or the time for the appeal has expired; or

(2) An employee or board member of the recipient has been convicted of, or judgment has been entered against the employee or board member for, a violation of any of the laws listed in paragraph (a)(1) of this section with respect to a recipient's grant or contract with LSC by the court having jurisdiction of the matter, and any appeals of the conviction or judgment have been exhausted or the time for appeal has expired, and the Corporation finds that the recipient has knowingly or through gross negligence allowed the employee or board member to engage in such activities.

**§ 1640.3 Contractual agreement.**

As a condition of receiving LSC funds, a recipient must enter into a written contractual agreement with the Corporation that, with respect to its LSC funds, it will be subject to the Federal laws listed in § 1640.2(a)(1). The agreement shall include a statement that all of the recipient's employees and board members have been informed of such Federal law and of the consequences of a violation of such law, both to the recipient and to themselves as individuals.

**§ 1640.4 Violation of agreement.**

(a) A violation of the agreement under § 1640.2(b)(1) shall result in the recipient's LSC grant or contract being terminated by the Corporation without need for a termination hearing. During the pendency of any appeal of a conviction or judgment, the Corporation may take such steps as it determines necessary to safeguard its funds.

(b) A violation of the agreement under § 1640.2(b)(2) shall result in the recipient's LSC grant or contract being terminated by the Corporation. Prior to such termination, the Corporation shall provide notice and an opportunity to be heard for the sole purpose of determining whether the recipient knowingly or through gross negligence allowed the employee or board member to engage in the activities which led to the conviction or judgment. During the pendency of any appeal of a conviction or judgment or during the pendency of a hearing, the Corporation may take such steps as it determines necessary to safeguard its funds.

Dated: April 14, 1997.

**Victor M. Fortuno,**

*General Counsel.*

[FR Doc. 97–10039 Filed 4–18–97; 8:45 am]

BILLING CODE 7050–01–P

federal register

Monday
April 21, 1997

## Part III

# Department of Justice

### Bureau of Prisons

### 28 CFR Part 524

### Classification and Program Review: Team Meetings; Proposed Rule

**DEPARTMENT OF JUSTICE**

**Bureau of Prisons**

**28 CFR Part 524**

**[BOP–1068–P]**

**RIN 1120–AA64**

## Classification and Program Review: Team Meetings

**AGENCY:** Bureau of Prisons, Justice.

**ACTION:** Proposed rule.

**SUMMARY:** The Bureau of Prisons is proposing to amend its regulations on classification and program review to discontinue the practice of permitting inmates to waive appearance at classification team meetings for program reviews. The purpose of this change is to ensure that inmates participate in their own program reviews.

**DATES:** Comments due by June 20, 1997.

**ADDRESSES:** Rules Unit, Office of General Counsel, Bureau of Prisons, HOLC Room 754, 320 First Street, NW., Washington, DC 20534.

**FOR FURTHER INFORMATION CONTACT:** Roy Nanovic, Office of General Counsel, Bureau of Prisons, phone (202) 514–6655.

**SUPPLEMENTARY INFORMATION:** The Bureau of Prisons is proposing to amend its regulations on classification and program review (28 CFR part 524, subpart B). A final rule on this subject was published in the **Federal Register** on July 3, 1991 (56 FR 30676), and was amended August 5, 1992 (57 FR 34662) and June 27, 1995 (60 FR 33320).

Program reviews provide the inmate with an opportunity to discuss staff's assessment of the inmate's performance in the institution's programming. Current regulations in § 524.12(c), permit an inmate to elect not to attend program reviews subsequent to the initial classification meeting. In order to ensure that the inmate participates in program reviews, the Bureau is proposing to eliminate the inmate's option not to attend program reviews. Sanctions for an inmate's unexcused absence, contained in the Bureau's regulations on inmate discipline (see 28 CFR 541.13), remain unchanged.

The Bureau of Prisons has determined that this rule is not a significant regulatory action for the purpose of E.O. 12866, and accordingly was not reviewed by the Office of Management and Budget. After review of the law and regulations, the Director, Bureau of Prisons has certified that this rule, for the purpose of the Regulatory Flexibility Act (5 U.S.C. 601 *et seq.*), does not have a significant impact on a substantial number of small entities. Because this rule pertains to the correctional management of offenders committed to the custody of the Attorney General or the Director of the Bureau of Prisons, its economic impact is limited to the Bureau's appropriated funds.

Interested persons may participate in this proposed rulemaking by submitting data, views, or arguments in writing to the Rules Unit, Office of General Counsel, Bureau of Prisons, 320 First Street, NW., HOLC Room 754, Washington, DC 20534. Comments received during the comment period will be considered before final action is taken. Comments received after the expiration of the comment period will be considered to the extent practicable. All comments received remain on file for public inspection at the above address. The proposed rule may be changed in light of the comments received. No oral hearings are contemplated.

### List of Subjects in 28 CFR Part 524

Prisoners.

**Kathleen M. Hawk,**

*Director, Bureau of Prisons.*

Accordingly, pursuant to the rulemaking authority vested in the Attorney General in 5 U.S.C. 552(a) and delegated to the Director, Bureau of Prisons in 28 CFR 0.96(p), part 524 in subchapter B of 28 CFR, chapter V is proposed to be amended as set forth below.

**SUBCHAPTER B—INMATE ADMISSION, CLASSIFICATION, AND TRANSFER**

## PART 524—CLASSIFICATION OF INMATES

1. The authority citation for 28 CFR part 524 continues to read as follows:

**Authority:** 5 U.S.C. 301; 18 U.S.C. 3521–3528, 3621, 3622, 3624, 4001, 4042, 4046, 4081, 4082 (Repealed in part as to offenses committed on or after November 1, 1987), 5006–5024 (Repealed October 12, 1984 as to offenses committed after that date), 5039; 21 U.S.C. 848; 28 U.S.C. 509, 510; 28 CFR 0.95–0.99.

2. In § 524.12, paragraph (c) is revised to read as follows:

**§ 524.12 Initial classification and program reviews.**

* * * * *

(c) Staff shall notify an inmate at least 48 hours prior to that inmate's scheduled appearance before the classification team (whether for the initial classification or subsequent program review). An inmate may waive in writing the 48-hour notice requirement. The inmate is expected to attend the initial classification and all subsequent program reviews. If the inmate refuses to appear at a scheduled meeting, staff shall document on the Program Review Report the inmate's refusal and, if known, the reasons for refusal. A copy of this report is to be forwarded to the inmate. The inmate is responsible for becoming aware of, and will be held accountable for, the classification team's actions.

* * * * *

[FR Doc. 97–10137 Filed 4–18–97; 8:45 am]

BILLING CODE 4410–05–P

federal register

Monday
April 21, 1997

## Part IV

# Department of Education

**National Institute on Disability and Rehabilitation Research; Notice**

## DEPARTMENT OF EDUCATION

### National Institute on Disability and Rehabilitation Research

**AGENCY:** Department of Education.

**ACTION:** Notice of Proposed Priorities for Fiscal Years 1997–1998 for Rehabilitation Research and a Knowledge Dissemination and Utilization Project.

**SUMMARY:** The Secretary proposes priorities for the Rehabilitation Research and Training Center (RRTC) Program and the Knowledge Dissemination and Utilization (D&U) Program under the National Institute on Disability and Rehabilitation Research (NIDRR) for fiscal years 1997–1998. The Secretary takes this action to focus research attention on areas of national need to improve rehabilitation services and outcomes for individuals with disabilities, and to assist in the solutions to problems encountered by individuals with disabilities in their daily activities.

**DATES:** Comments must be received on or before May 21,1997.

**ADDRESSES:** All comments concerning these proposed priorities should be addressed to David Esquith, U.S. Department of Education, 600 Independence Avenue, SW., Switzer Building, Room 3424, Washington, DC 20202–2601. Internet: NPP__D&U@ed.gov

**FOR FURTHER INFORMATION CONTACT:** David Esquith. Telephone: (202) 205–8801. Individuals who use a telecommunications device for the deaf (TDD) may call the TDD number at (202) 205–2742. Internet: David__Esquith@ed.gov

**SUPPLEMENTARY INFORMATION:** This notice contains proposed priorities to establish RRTCs for research related to persons who are late-deafened or hard-of-hearing, substance abuse, rural rehabilitation, and medical rehabilitation services and outcomes. In addition there is a D&U project on parenting.

These proposed priorities support the National Education Goal that calls for all Americans to possess the knowledge and skills necessary to compete in a global economy and exercise the rights and responsibilities of citizenship.

The Secretary will announce the final funding priorities in a notice in the **Federal Register**. The final priorities will be determined by responses to this notice, available funds, and other considerations of the Department. Funding of particular projects depends on the final priorities, the availability of funds, and the quality of the applications received. The publication of these proposed priorities does not preclude the Secretary from proposing additional priorities, nor does it limit the Secretary to funding only these priorities, subject to meeting applicable rulemaking requirements.

**Note:** This notice of proposed priorities does *not* solicit applications. A notice inviting applications under these competitions will be published in the **Federal Register** concurrent with or following publication of the notice of the final priorities.

### Rehabilitation Research and Training Centers (RRTCs)

Authority for the RRTC program of NIDRR is contained in section 204(b)(2) of the Rehabilitation Act of 1973, as amended (29 U.S.C. 760–762). Under this program the Secretary makes awards to public and private organizations, including institutions of higher education and Indian tribes or tribal organizations for coordinated research and training activities. These entities must be of sufficient size, scope, and quality to effectively carry out the activities of the Center in an efficient manner consistent with appropriate State and Federal laws. They must demonstrate the ability to carry out the training activities either directly or through another entity that can provide that training.

The Secretary may make awards for up to 60 months through grants or cooperative agreements. The purpose of the awards is for planning and conducting research, training, demonstrations, and related activities leading to the development of methods, procedures, and devices that will benefit individuals with disabilities, especially those with the most severe disabilities.

Under the regulations for this program (see 34 CFR 352.32) the Secretary may establish research priorities by reserving funds to support particular research activities.

### Description of the Rehabilitation Research and Training Center Program

RRTCs are operated in collaboration with institutions of higher education or providers of rehabilitation services or other appropriate services. RRTCs serve as centers of national excellence and national or regional resources for providers and individuals with disabilities and the parents, family members, guardians, advocates or authorized representatives of the individuals.

RRTCs conduct coordinated and advanced programs of research in rehabilitation targeted toward the production of new knowledge to improve rehabilitation methodology and service delivery systems, to alleviate or stabilize disabling conditions, and to promote maximum social and economic independence of individuals with disabilities.

RRTCs provide training, including graduate, pre-service, and in-service training, to assist individuals to more effectively provide rehabilitation services. They also provide training including graduate, pre-service, and in-service training, for rehabilitation research personnel and other rehabilitation personnel.

RRTCs serve as informational and technical assistance resources to providers, individuals with disabilities, and the parents, family members, guardians, advocates, or authorized representatives of these individuals through conferences, workshops, public education programs, in-service training programs and similar activities.

NIDRR encourages all Centers to involve individuals with disabilities and minorities as recipients in research training, as well as clinical training.

Applicants have considerable latitude in proposing the specific research and related projects they will undertake to achieve the designated outcomes; however, the regulatory selection criteria for the program (34 CFR 352.31) state that the Secretary reviews the extent to which applicants justify their choice of research projects in terms of the relevance to the priority and to the needs of individuals with disabilities. The Secretary also reviews the extent to which applicants present a scientific methodology that includes reasonable hypotheses, methods of data collection and analysis, and a means to evaluate the extent to which project objectives have been achieved.

The Department is particularly interested in ensuring that the expenditure of public funds is justified by the execution of intended activities and the advancement of knowledge and, thus, has built this accountability into the selection criteria. Not later than three years after the establishment of any RRTC, NIDRR will conduct one or more reviews of the activities and achievements of the Center. In accordance with the provisions of 34 CFR 75.253(a), continued funding depends at all times on satisfactory performance and accomplishment.

### General

The Secretary proposes that the following requirements will apply to these RRTCs pursuant to the priorities unless noted otherwise:

Each RRTC must conduct an integrated program of research to develop solutions to problems confronted by individuals with disabilities.

Each RRTC must conduct a coordinated and advanced program of training in rehabilitation research, including training in research methodology and applied research experience, that will contribute to the number of qualified researchers working in the area of rehabilitation research.

Each Center must disseminate and encourage the use of new rehabilitation knowledge. They must publish all materials for dissemination or training in alternate formats to make them accessible to individuals with a range of disabling conditions.

Each RRTC must involve individuals with disabilities and, if appropriate, their family members, as well as rehabilitation service providers, in planning and implementing the research and training programs, in interpreting and disseminating the research findings, and in evaluating the Center.

**Priorities**

Under 34 CFR 75.105(c)(3), the Secretary proposes to give an absolute preference to applications that meet one of the following priorities. The Secretary proposes to fund under these competitions only applications that meet one of these absolute priorities:

*Proposed Priority 1: Maintaining the Employment Status and Addressing the Personal Adjustment Needs of Individuals Who Are Late-Deafened or Hard-of-Hearing*

Background

Individuals whose hearing is impaired, but who can understand conversational speech with, or without, amplification are hard-of-hearing (HOH). Adults who are late-deafened (L–D) become deaf after having experienced hearing as well as speech and language development. Adults who are late-onset HOH and those who are L–D have common and different employment-related and personal adjustment needs. A third group of persons who are considered hearing-impaired are those persons who are prelingually deaf. Because the prelingually deaf have been and continue to be the focus of other NIDRR-funded research, this proposed priority is for research that addresses the needs of adults who are L–D or late-onset HOH.

According to data from the Bureau of the Census, the number of individuals who have a functional limitation in hearing normal conversation is approximately 10.9 million (McNeil, J., ''Americans with Disabilities: 1991–1992,'' *Household Economic Studies*, P70–33, December 1993). The National Center for Health Statistics (NCHS) estimates the number of persons who are HOH ranges from 20 million to 22 million (''National Health Survey,'' Series 10, No. 188, 1994). The NCHS studies use the ''Gallaudet Hearing Scale'' which is self-reporting and quantifies the amount of interference with hearing in ordinary day-to-day situations. According to the Association of Late-Deafened Adults, the number of persons who are L–D is estimated to be between 800,000 and 1.5 million. For 1991 and 1992, of all persons 21 to 64 years old who had some functional limitation hearing normal conversation, 3,335,000 individuals or 63.6 percent were employed, while 189,000 individuals, or 58.2 percent of those who were totally unable to hear normal conversation, were employed (McNeil, J., 1993).

Over the years, NIDRR has supported a number of research efforts to address the problems caused by various hearing impairments. At various times these efforts have included: developing hearing aids and telecommunication devices; enhancing the use and teaching of sign language interpreters; developing interventions for ''low-functioning'' deaf persons with multiple disabilities; developing more effective interventions and service models for hearing impaired vocational rehabilitation clients; and studying mental health issues of persons who are deaf, HOH, or L–D.

As the population ages, as people recover from serious illness with hearing impairments, and as environmental factors contribute to the incidence of hearing loss, it has become clear that there is a growing population of persons who experience disabling hearing loss as adults. The time of onset is likely to be in older adulthood, but this population is distinguished by the fact that the hearing loss occurs after the person has developed spoken language, has completed substantial formal education, and may have worked, married, had children, or developed social relationships—as a hearing person with ''normal'' speech.

These individuals face major adjustment problems in all phases of their lives, and may undergo depression and disruption in family or community life, as well as in their ability to perform their work and maintain their career. Such individuals need to learn ways to maintain communication skills—both receptive and expressive—and frequently need interventions to enable them to maintain speech quality (i.e., volume, modulation, articulation). Because they socialize and work with colleagues, family, and friends in a hearing and speaking environment, and because of their age, they are not likely to make a transition to deaf culture even if they do learn some sign language. Most will depend on lip-reading, amplification, or written communication. Multiple personal adjustment and work performance issues confront these individuals ranging from safety (e.g., driving and traffic noise, fire alarms, public announcement warning systems) to following instructions at work, to communicating with doctors, dentists, and therapists about their health and medications.

The impact of partial or complete hearing loss may have compound effects on the work status of individuals who are L–D or HOH. In addition to the functional impact of the hearing loss on an employee's performance, the employee may be unfamiliar with his or her civil rights and concerned about disclosing his or her condition for fear of dismissal, demotion, or loss of potential career advancement. This fear of disclosure not only produces additional anxiety, but also may delay or prevent the employee from obtaining needed assistance. Even if the employee discloses his or her condition, human resource personnel, family counselors, and other employment and social service providers may not be familiar with the sundry impacts that hearing loss and impairment can have on work performance and personal life. The inability of human resource personnel, family counselors, and others to provide effective services can increase the individual's sense of isolation and anxiety.

Factors such as early identification, family support, and the provision of reasonable accommodations can play an important role in enabling the individual to adjust to the hearing impairment and maintain employment, family, and community status. Providing such individuals with appropriate assistive technology (e.g., assistive listening devices, realtime computer assisted captioning) in a timely manner can make a significant difference in job performance and morale.

The onset of a hearing impairment or the increased loss of hearing ability also can have a significant impact on the personal life of an individual who is L–D or HOH. It is not uncommon for those individuals to experience feelings of disorientation and alienation and to withdraw from family and friends. That

withdrawal reinforces the individual's isolation and can, in extreme instances, lead to secondary complications such as alcohol and drug abuse.

*Proposed Priority 1*

The Secretary proposes to establish an RRTC for the purpose of conducting research on the maintenance of employment status and personal adjustment of persons who are L–D or HOH. The RRTC will:

(1) Identify and analyze the factors that negatively impact the employment status and the personal life of persons who are L–D or HOH;

(2) Develop and disseminate interventions that address these employment and personal adjustment problems, including early identification, reasonable accommodations, counseling, and assistive technology;

(3) Develop information materials on effective interventions and disseminate those materials to employers, human resource organizations, appropriate counseling organizations, and organizations representing persons who are L–D or HOH;

(4) Identify materials that address the rights of persons who are L–D or HOH under the ADA, and other disability rights laws, disseminate these materials to organizations representing those persons, and inform those organizations about opportunities to receive training and technical assistance from entities such as the Disability and Business Technical Assistance Centers (DBTACs); and

(5) Develop training and technical assistance materials and provide training and technical assistance to employers, human resource organizations, appropriate counseling organizations, and organizations representing persons who are L–D or HOH to enable them to address effectively the employment and personal adjustment problems experienced by persons who are L–D or HOH.

In carrying out the purposes of the priority, the RRTC shall:

- Identify and address the employment and personal adjustment issues that are common to both persons who are L–D and those who are HOH, as well as those issues that are unique to each population; and

- Coordinate with NIDRR's other research projects addressing individuals who are L–D or HOH, the DBTACs, and the Assistive Technology Projects.

*Proposed Priority 2: Improving Vocational Rehabilitation Outcomes for Individuals Who Are Substance Abusers*

Background

In 1993, NIDRR funded the establishment of a three-year RRTC on Substance Abuse and Disability to address the vocational rehabilitation needs of two major categories of eligible individuals served by the State Vocational Rehabilitation (VR) Services program. The two categories of VR eligible individuals were: (1) Those whose substance abuse has resulted in a work disability; and (2) those who have some other disability but whose substance abuse interferes with their ability to benefit from vocational rehabilitation services.

In addition, the 1993 priority authorizing the RRTC limited the scope of substance abuse to substances other than alcohol abuse (although the presence of alcohol abuse in conjunction with other substance abuse was within the scope of the RRTC). For the purposes of this priority, NIDRR is proposing to expand the scope of the priority to include alcohol abuse with or without the presence of other substance abuse. NIDRR is particularly interested in receiving public comments on expanding the scope of substance abuse addressed by the RRTC.

Individuals with a disability that results in a substantial impediment to employment and who can benefit from VR services, including those individuals whose disabling condition is due to substance abuse, are eligible for services through the State Vocational Rehabilitation (VR) Services Program, authorized under Title I of the Rehabilitation Act. Program data for fiscal year 1995 show that substance abuse was reported as the primary disabling condition for 51,339 eligible individuals who exited the program in that year. Of the 51,339 individuals with a primary disability of substance abuse, 22,708 persons' primary disabling condition was alcohol abuse and 28,631 persons' primary disabling condition was drug abuse. Of the 40,766 eligible individuals with a primary disabling condition of substance abuse who received services before exiting the program, 21,718 (53 percent) achieved an employment outcome (Rehabilitation Services Administration, Caseload Services data, 1995).

There are also individuals with disabilities served by the State VR program for whom substance abuse is a co-existing, and sometimes hidden, condition. In addition to those individuals who exited the VR program in 1995 for whom substance abuse was reported as the primary disabling condition, another 33,808 individuals were reported to have a secondary disability of substance abuse. Findings from a State-wide survey of alcohol, tobacco, illicit drugs, and medication among applicants for vocational rehabilitation services from Michigan Rehabilitation Services indicate that while alcohol use patterns approximate the general population, the percent of applicants who report current tobacco use or lifetime use of illicit drugs appear considerably higher than the general population (Moore, D. and Li, L., ''Substance Abuse Among Applicants for Vocational Rehabilitation Services,'' *Journal of Rehabilitation,* Vol. 60, No. 4, pgs. 48–53, 1994).

Unrecognized or untreated substance abuse as a co-existing condition can be a greater barrier to employment than the primary disability. Chief among those barriers are complications of psychological and social adjustment to the disability, impaired learning processes, decreased chances for vocational preparation and employment, and increased risk of adverse medical effects from the intersection of abused substances with treatment medications.

One of the primary modes of transmission of HIV is through injection drug use when an HIV-infected syringe is shared between individuals. The higher incidence of intravenous drug abuse in socio-economically depressed communities means that resultant HIV is concentrated among individuals who lack health care, have low education and little prior work experience, and lack access to transportation, assistive technology, and other community supports that facilitate vocational rehabilitation and job maintenance. Substance abuse also leads to more high risk sexual behaviors, further increasing the incidence of HIV infection in this population. The presence of HIV infection can be a complicating factor in the vocational rehabilitation of substance abusers. There is a need for research on the specific vocational rehabilitation needs of substance abusers with HIV.

The need for an expanded understanding of the relationship between vocational rehabilitation, substance abuse, and disability has been further underscored by recent changes in legislation, including welfare reform and discontinuance of Social Security Insurance and Social Security Disability Insurance benefits for individuals who previously were eligible based on addictions to alcohol and other drugs. The removal of substantial numbers of substance abusers from income supports

and medical assistance is likely to cause strains on the vocational rehabilitation service delivery system by increasing the demand for services, decreasing the ''comparable benefits'' dollars available for VR services, decreasing access to general health care during rehabilitation, and increasing client financial instability. Changes in the management and financing of health care in both the public and private sector, including managed care, may also have an impact on VR agencies' financial arrangements with third party payers and access to comparable benefits for substance abuse treatment.

Although there is an increasing prevalence of substance abuse among a diverse population of individuals undergoing rehabilitation, many service providers communicate that they have an inadequate understanding about substance abuse and co-existing disability and that this adversely impacts their ability to address the problem effectively (Heinemann, A. W., ''An Introduction to Substance Abuse and Physical Disability,'' *Substance Abuse and Physical Disability*, New York: The Haworth Press, 1993). Practitioners in a growing number of disciplines within the rehabilitation field need information about substance abuse and co-existing disability, including rehabilitation educators, vocational rehabilitation counselors, health care providers, independent living specialists, community-based rehabilitation providers, rehabilitation administrators, chemical dependence counselors, and directors of State vocational rehabilitation programs.

In order to address this need and because there are other Federal agencies that focus significant resources on individuals whose sole or primary disability is substance abuse, NIDRR is proposing that this RRTC focus its efforts, although not exclusively, on issues affecting individuals with co-existing disabilities. Particular emphasis would be given to VR eligible individuals for whom substance abuse is not their sole or primary disabling condition, but whose substance abuse interferes with their ability to benefit from vocational rehabilitation services. NIDRR is particularly interested in receiving public comments on this emphasis.

*Proposed Priority*

The Secretary proposes to establish an RRTC for the purpose of improving vocational rehabilitation outcomes for VR eligible individuals whose substance abuse has resulted in a work disability, or who have some other disability that results in a substantial impediment to employment but whose substance abuse interferes with their ability to benefit from vocational rehabilitation services. The RRTC shall:

(1) Conduct epidemiological studies to advance the understanding of the relationship between substance abuse and disability among individuals who are eligible for the State Vocational Rehabilitation Services program, including determining the relative prevalence of substance abuse among persons with more severe disabilities;

(2) Develop, identify, and evaluate information about effective methods for providing vocational rehabilitation services to individuals who are substance abusers;

(3) Investigate the impact of recent legislative changes (including welfare reform and SSA eligibility) and changes in health care management and financing of substance abuse treatment on the provision of vocational rehabilitation services to individuals who are substance abusers; and

(4) Disseminate informational materials and provide technical assistance and training to VR eligible individuals whose substance abuse has resulted in a work disability, or who have some other disability that results in a substantial impediment to employment but whose substance abuse interferes with their ability to benefit from vocational rehabilitation services, vocational rehabilitation personnel, and related rehabilitation disciplines concerning effective strategies for providing vocational rehabilitation services.

In carrying out the purposes of the priority, the RRTC shall:

- Give special emphasis to issues affecting the vocational rehabilitation of individuals with co-existing disabilities, particularly issues affecting VR eligible individuals for whom substance abuse is not their sole or primary disabling condition, but whose substance abuse interferes with their ability to benefit from vocational rehabilitation services.
- Address the vocational rehabilitation needs of individuals with HIV/AIDS who are VR eligible individuals whose substance abuse has resulted in a work disability, or who have some other disability that results in a substantial impediment to employment but whose substance abuse interferes with their ability to benefit from vocational rehabilitation services;
- Where appropriate, address the needs of transitioning special education students who may have substance abuse problems, their special education teachers, and administrators; and
- Coordinate with projects on substance abuse supported by the Substance Abuse and Mental Health Services Administration and with NIDRR centers and projects on vocational rehabilitation and emerging disability populations.

*Proposed Priority 3: Improving Employment and Independent Living Outcomes for Persons With Disabilities in Rural Areas*

Background

Between 11 and 15 million persons living in rural areas have a chronic or permanent disability, a higher per capita rate of disability than exists in cities with populations over 50,000 (Young, C. and O'Day, B., ''Issues in Rural Independence: Funding,'' *Rural Monograph Series*.'' Compared to their counterparts in metropolitan areas, persons with disabilities in rural areas have higher rates of activity limitation (16.4% versus 14.6%), work limitation (14.2% versus 10.9%), and personal care limitation (4.7% versus 3.8%) (LaPlante, M. et al., ''Disability Statistics Report #7,'' *Disability in the United States: Prevalence and Causes, 1992*, Institute for Health and Aging, University of California, San Francisco, July, 1996). Persons with disabilities in rural areas face challenges that are quite different from their peers living in and around metropolitan areas. The quality of life for many people with disabilities residing in rural America is characterized by:

(1) Limited job opportunities; (2) inadequate health care; (3) isolation and inadequate transportation; (4) lack of accessible housing; and (5) underfunded social services.

For many rural areas, social and economic vitality hinges on overcoming the problems posed by remoteness from urban centers—such as the lack of easy access to advanced education, medical knowledge, and enterprise development opportunities. People with disabilities living in rural communities often live a long distance from vocational rehabilitation (VR) agencies, independent living centers (ILCs), and other social service agencies. Although these resources have great potential for reducing the impact of disability, service delivery challenges limit their availability in rural areas.

Currently, Federal, State, and local initiatives such as Empowerment Zones (EZ) or Enterprise Communities (EC) are addressing community and economic development in rural areas. The Federal government, working across agency lines and in a new partnership with State and local government and the private sector, has provided distressed communities with the tools they need

and flexibility they desire, in the form of block grants, tax breaks and waivers. In return, EZ/EC communities—residents, community leaders, businesses, State and local governments and schools—must demonstrate that they are taking responsibility for their own futures by developing and implementing a plan to utilize these tools. The U.S. Department of Agriculture (USDA) is authorized to designate three rural EZs and thirty ECs.

These projects are intended to demonstrate that innovative economic development and service delivery approaches can make a difference for people with disabilities living in rural areas. It is important for individuals with disabilities living in rural communities participate in long-range community development planning. Their involvement is crucial to ensure that the unique needs of people with disabilities for employment, economic self-sufficiency, transportation, affordable and accessible housing, and access to generic community facilities are addressed. Research is needed to study current approaches, and to develop new models, for increasing their participation in public and private economic development and services improvement initiatives.

The health problems experienced by people with disabilities living in rural areas are complicated by the burden of travelling long distances and the general shortage of primary health care providers. As a result, people with disabilities living in rural areas may experience a high rate of secondary conditions each year such as pressure sores, physical deconditioning, urinary tract infections, depression and pain (Seekins, T. *et al.*, ''A Descriptive Study of Secondary Conditions Reported by a Population of Adults with Physical Disabilities Served by Three Independent Living Centers in a Rural State,'' *Journal of Rehabilitation*, Vol. 60, No. 2, pgs. 47–51, 1994). Proper education, support delivered by health clinics and independent living centers, and utilization of telemedicine can dramatically improve the health of adults with disabilities and reduce medical service utilization.

The USDA's Rural Utilities Service, which funds telecommunications infrastructure in many rural areas, provides grants to link rural health clinics with larger hospitals to better serve rural residents. The U.S. Department of Health and Human Services' (DHHS') Health Care Financing Administration funds Rural Telemedicine Grants which demonstrate and collect information on the feasibility, costs, appropriateness, and acceptability of telemedicine for improving access to health services for rural residents and reducing the isolation of rural practitioners. The intended beneficiaries of these grants are rural health care providers, patients, and rural communities which gain from this program.

Changes in health care policy, such as managed care, are significantly affecting the lives of people with disabilities living in rural areas. For example, managed care emphasizes primary care and control of access to specialized services. Persons with significant disabilities in rural areas, however, have difficulty obtaining primary care and often need extensive services and access to highly specialized providers to prevent death or further disability (''Medicaid Managed Care: Serving the Disabled Challenges State Programs,'' *U.S. General Accounting Office (GAO)/ Health, Education, and Human Services-96–136).*

The use of telecommunications technologies may be a critical element in efforts to provide social services as well as maintain and foster economic development. Advanced telecommunications technologies—the Internet, videoconferencing and high-speed data transmission—offer rural areas the chance to overcome some of the problems they face as a result of their geographic isolation. These technologies can link rural areas with other communities and expertise to improve medical services, create new jobs, and increase rural residents' access to education (''Rural Development: Steps Toward Realizing the Potential of Telecommunications Technologies,'' *GAO/Resources, Community, and Economic Development-96–155*).

Interactive technology can link isolated rural settings with comprehensive services at distant facilities. With these linkages, the distant facility can review X-rays, CAT scans, and other medical evidence to diagnose an illness and prescribe treatment without having the patient make long, and sometimes difficult, trips to the larger institution. Colleges and schools can offer classes, and even degree programs, to students in remote locations. Large businesses can establish or maintain branch offices in rural areas by using videoconferencing or on-line access to hold meetings and conduct business. There is a need to design ways to apply these emerging interactive technologies on the lives of people with disabilities living in rural areas, particularly as Federal and other public and private programs expand their uses of interactive technology.

*Proposed Priority 3*

The Secretary proposes to establish an RRTC for the purpose of examining means to improve the employment status and ability of persons with disabilities to live independently in rural areas. The RRTC shall:

(1) Identify, analyze and evaluate the impact of rural economic development strategies in improving the employment outcomes and economic status of people with disabilities living in rural communities;

(2) Identify and examine issues of access to health care for persons with disabilities living in rural areas, particularly those issues contributing to the onset of secondary conditions;

(3) Develop and evaluate strategies to increase the participation of people with disabilities in local public planning for community development;

(4) Identify, develop, and evaluate strategies to improve rural transportation, accessible housing, and access to generic community facilities services for people with disabilities;

(5) Identify and evaluate strategies to improve the use of telecommunications technologies for the delivery of health, employment, education, and social services to people with significant disabilities living in rural communities; and

(6) Develop training and informational materials and provide training and information to persons with disabilities, and providers of health care, vocational rehabilitation, and independent living services, on effective strategies for improving the employment, health, and independent living outcomes of people with disabilities living in rural areas.

In carrying out the purposes of the priority, the RRTC shall:

- Coordinate with NIDRR-funded research, training and demonstration activities on delivery of rehabilitation and independent living services in rural areas, including those sponsored by RSA and the RRTC on managed care;
- Where appropriate, address the needs of transitioning special education students and their special education teachers and administrators;
- Coordinate with rural projects affecting persons with disabilities funded by USDA and DHHS; and
- Address the needs of persons with disabilities in rural communities in all parts of the country, including persons from ethnic and racial minority backgrounds.

*Proposed Priority 4: Medical Rehabilitation Services and Outcomes*

Background

Medical rehabilitation services are provided to individuals with disabilities to restore maximum function and independence. Traditionally, these services were provided by physicians, nurses, and allied health professionals in hospitals and rehabilitation centers. Medical rehabilitation service consumers comprise a wide range of diagnostic groups including individuals with stroke, orthopedic conditions, brain injury, spinal injury, and neurologic conditions. The need for medical rehabilitation services for persons with disabilities is expected to continue to grow in the coming decades because of increased chances of survival after trauma, disease, or birth anomaly, increased prevalence of disability related to the general aging of the population, and the increased incidence of individuals with disabilities acquiring secondary disabilities or chronic conditions as a result of increased longevity. Despite large growth projections, the impact of the projected increase in need for medical rehabilitation has not been extensively investigated in relation to long-term costs and outcomes.

Changes in the organization and delivery of health services issues are having a significant impact on the delivery and outcomes of comprehensive medical rehabilitation services. Recent trends, such as decreased length of stay associated with the high costs of inpatient care, have contributed to the growth of rehabilitation programs in sub-acute facilities, such as skilled nursing homes, and increased use of outpatient and home health care. Many rehabilitation hospitals, as well as medical rehabilitation programs within hospitals, have been influenced significantly by program consolidations, changes in ownership, third-party reimbursement provisions, and related factors that have decreased the number of beds and the average length of patient stay. At the same time, demand is increasing for sub-acute rehabilitation and general outpatient physical medicine (''Adapting to a Managed Care World: The Challenge for Physical Medicine and Rehabilitation,'' Lewin-VHI Workforce Study, American Academy of Physical Medicine and Rehabilitation, 1995).

The effectiveness of the treatments and therapeutic interventions that are generally used in clinical practice are, for the most part, not evaluated in terms of their impact on long-term functional outcomes or their cost. The cost-effectiveness and impact of alternative rehabilitative strategies should be evaluated rigorously in order to obtain information that will contribute to cost-effective, rational, and fair decisions regarding the provision of treatment and services. Medical rehabilitation services need an enhanced validated outcome measurement system to inform decisions in management issues facing health care consumers, providers, and insurers. Increasingly, payers are seeking to base decisions of whether to provide coverage for selected services or interventions on the basis of proven efficacy or cost-effectiveness as determined by rigorous scientific evidence such as that gained through randomized controlled trials.

Functional Assessments (FAs) can be used to evaluate an individual's ability to carry out activities of daily living and instrumental activities of daily living such as eating, bathing, moving from place to place, dressing, doing household chores or other necessary business, and taking care of personal hygiene. Data from FAs also are used to predict post-rehabilitation functioning, and to evaluate rehabilitation services. Improving rehabilitation practices and outcomes requires an ability to assess the status and changes in function in many areas. Multiple measures of function and activities of daily living are needed in all rehabilitation settings, including in the home and community. The increased use of telemedicine and multimedia technology is rapidly changing the manner in which functional assessment measures are generated and shared among members of the rehabilitation team. Functional outcome measures are of increasing importance in medical economics, benefits planning, managed care, and program evaluation (Ikegami, N., ''Functional Assessment and Its Place in Health Care,'' *New England Journal of Medicine*, Vol. 332, pgs. 598–599, 1995).

There is a need to collect and analyze data to determine the organization and delivery of rehabilitative care, including such parameters as facility and program sizes (i.e., economies of scale) and the number and mix of health care providers needed to serve various disability groups. Few data are available to define optimal strategies for outpatient services, nor are there methods to apply FAs or gather patient outcome data in non-hospital settings.

Improving rehabilitation medicine and ensuring that disabled individuals will have access to needed medical rehabilitation in the future requires: an ability to assess functional status and changes in status in many functional areas; the ability to evaluate rehabilitation outcomes for individuals with various diagnoses, characteristics, and interventions; and the ability to apply these measures in health services policy research in order to affect policy and funding decisions in the health care delivery context.

In the past, NIDRR has supported the development and application of the ''Functional Independence Measure'' (FIM), a criterion-referenced scale that has been widely accepted in inpatient rehabilitation settings, and also the development of the ''Craig Handicap Assessment and Reporting Technique'' (CHART), which contains scales for assessing the World Health Organization (WHO) dimensions of handicap, and is currently being refined to measure cognitive components of handicap. NIDRR currently supports an RRTC on Functional Assessment that has contributed to the scientific measurement of medical rehabilitation through applications of the FIM, refinement of the CHART, and management and analysis of the Uniform Data System (UDS), a collection of data from the application of FIM measures in many institutions.

Current measurement systems, such as the FIM and the UDS, have made significant contributions, but need modifications to increase their utility and applicability in the new environment of rehabilitation care. For example, many practitioners and theorists have suggested that the FIM does not make adequate provision for the role of assistive technology in attaining functional levels. Like the FIM, most functional assessment measurement systems were designed for use in an inpatient setting. These systems need to be evaluated and modified to measure functional status and functional change outside of hospital and clinical settings, either in community-based facilities or in real-world environments of daily living. The FIM, for example, needs further refinement to address the social and environmental dimensions of disablement. The UDS at present contains data on a limited number of disabilities, and those measurements again are not community-based.

NIDRR also has supported a center on medical rehabilitation services that has looked at such factors as supply and demand for rehabilitation facilities and practitioners, financing, and evaluation of the outcomes of rehabilitation medicine. This center has also addressed the changing context for the delivery of medical rehabilitation and access to medical rehabilitation by various population groups. Both of these

centers have made contributions to the maturing of the field of medical rehabilitation and its ability to evaluate and document its interventions and outcomes.

However, it is now clear that the field needs a larger and more integrated effort to refine measures of functional ability, changes in ability over the lifespan or in response to medical rehabilitation interventions, and to apply the measurement system in the changing environment in which medical rehabilitation is delivered. NIDRR therefore is proposing a large-scale effort to involve significant leaders in the classification and measurement of function, the evaluation of rehabilitation interventions, and the broader application of knowledge to the organization and management of medical rehabilitation services in today's environment.

*Proposed Priority 4*

The Secretary proposes to establish an RRTC for the purpose of examining the impact of changes in the field of rehabilitation medicine and developing improved measures for assessing individual function and the impact of medical rehabilitation services. The RRTC shall:

(1) Identify and evaluate validated functional outcome measures that can be used or modified for assessing the impact of medical rehabilitation services in a wide range of rehabilitation settings, with particular emphasis on measures that can be adapted for use in outpatient and community-based settings, including those that use telemedicine and multimedia technology;

(2) Develop or improve measures to assess the impact of the social and physical environment in achieving quality rehabilitation outcomes, including the use of assistive technology in attaining functional outcomes;

(3) Identify or develop uniform database elements and standards based on validated individual measures at the person level for determining the cost-effectiveness and functional impact of specific rehabilitation interventions used by medical rehabilitation and allied-health disciplines across multiple settings and disability populations;

(4) Identify obstacles to the use of validated functional outcomes measures in a wide range of settings in which medical rehabilitation services are provided, and in decisions to provide and assess the effectiveness of medical rehabilitation treatments, and develop strategies and evaluate pilot projects to overcome those obstacles;

(5) Identify strategies for determining the long-term results of medical rehabilitation care, including use of assistive technology;

(6) Analyze how models for the organization of medical rehabilitation services affect outcomes and costs, and how the demographic, economic, and presenting conditions of consumers affect their utilization of rehabilitation services and the outcomes that are achieved; and

(7) Develop an information dissemination and training program to enable consumers, providers, researchers, policy makers, and relevant others in health and rehabilitation settings to assess the quality of medical rehabilitation services.

In carrying out the purposes of the priority, the RRTC shall:

- Coordinate with rehabilitation medicine research and demonstration activities sponsored by NIDRR, the National Center on Medical Rehabilitation Research, Veterans Affairs, and the Health Care Financing Administration; and
- Support two National Conferences as follows: (1) A conference on the use of functional outcome measures to improve medical rehabilitation practices and interventions, and (2) a conference on improving validity and reliability in the measurement of rehabilitation outcomes.

*Knowledge Dissemination and Utilization Projects*

Authority for the D&U program of NIDRR is contained in sections 202 and 204(a) of the Rehabilitation Act of 1973, as amended (29 U.S.C. 760–762). Under this program the Secretary makes awards to public and private organizations, including institutions of higher education and Indian tribes or tribal organizations. Under the regulations for this program (see 34 CFR 355.32), the Secretary may establish research priorities by reserving funds to support particular research activities.

*Priority*

Under 34 CFR 75.105(c)(3), the Secretary proposes to give an absolute preference to applications that meet the following priority. The Secretary proposes to fund under this competition only applications that meet this absolute priority:

*Proposed Priority 5: Parenting With a Disability Technical Assistance Center*

Background

Approximately one in eleven families with children at home includes one or more parents with a disability (LaPlante, M., ''Disability in the Family,'' presented at the annual meeting of the American Public Health Association, Atlanta, GA, 1991). This proportion can be expected to increase as a correlate of the gains that persons with disabilities have achieved in their efforts to live and work independently in the community. In the course of becoming parents and rearing children, persons with disabilities may encounter a variety of attitudinal, physical, medical, and legal barriers. They may also find misinformation or an absence of information regarding advances in fields that address issues related to parenting.

NIDRR has been addressing the physical barriers and reproductive issues faced by parents with disabilities through a variety of research and development projects. Since 1993 NIDRR has supported a Rehabilitation Research and Training Center on Families in which one or more adult parent or guardian has a disability. The Center has investigated a wide range of parenting issues, including the assistive technology needs of parents with disabilities, training obstetricians to deal with the needs of women with disabilities, and needs of mothers with visual disabilities. The Center has created and identified a wide range of valuable information for parents and professionals. In addition, over the last ten years, NIDRR has supported research projects on the design and development of new adaptive equipment for parents with physical disabilities and parenting assessment techniques. A wide array of parenting equipment has been developed, for example, a lifting harness and an adapted baby bathing cart. Information is also available on the social service needs of parents with disabilities. As a result of these and other research, training, and development efforts, a substantial body of knowledge now exists related to parenting with a disability.

Persons with disabilities who want to become, or remain parents, may need information and technical assistance. A NIDRR-sponsored focus group on women and disabilities held in 1994 recommended that NIDRR explore issues related to sexuality, reproductive health, pregnancy and parenting for women with disabilities, including ''the level of information that women have about these topics'' (''Focus Group on Women and Disabilities,'' unpublished ''Report of Proceedings,'' NIDRR, pg. 8, July, 1994). Parents with disabilities and prospective parents with disabilities need information about related advances in the field of assistive technology and medicine, public policy

and legal developments, and parenting resources.

One source of information and valuable experience is persons with disabilities who are parents. These individuals have a wealth of knowledge and can not only share their experiences and practical information, but also serve as uniquely qualified sources of support. Currently, this ''parent to parent'' networking is primarily informal and limited in scope.

Persons with disabilities may encounter substantial attitudinal and legal barriers in their efforts to become pregnant, gain or maintain custody, or adopt children. Barbara Faye Waxman, an expert on reproductive rights, notes that laws allowing sterilization of persons with disabilities remain on the books in some States and that social service agencies are often too quick to put the non-disabled children of parents with disabilities up for adoption (Mathews, J., ''The Disabled Fight to Raise Their Children,'' *Washington Post Health Section*, August 18, 1992). Most States treat disability as prima facie evidence of parental unfitness and a possible detriment to the child (Conly-Jung, C., ''The Early Parenting Experiences of Mothers with Visual Impairments and Blindness,'' Dissertation, California School of Professional Psychology, Alameda, CA, pg. 21, May, 1996). One important strategy in the effort to overcome these attitudinal and legal barriers is providing social service, legal, and medical professionals with information that dispels stereotypes and describes advances in the related fields that enable persons with disabilities to provide a safe and nurturing environment for their children.

*Proposed Priority 5*

The Secretary proposes to establish a center for the purpose of providing technical assistance and disseminating parenting information to persons with disabilities and to social service, medical, and legal service providers. The technical assistance center will:

(1) Identify and disseminate technological, legal, and medical information on parenting, pregnancy, custody, and adoption to parents, and prospective parents with disabilities, and service providers in related field of social services, law, and medicine;

(2) Develop training materials on parenting with a disability and disseminate those materials to organizations and institutions of higher education that provide pre-service and in-service training to professionals in related fields of social services, law, and medicine, as well as to organizations representing persons with disabilities;

(3) Provide technical assistance on parenting with a disability to persons with disabilities and service providers, including making referrals and serving as a clearinghouse of technical information; and

(4) Develop and establish a parent-to-parent network that enables experienced parents with disabilities to voluntarily provide information and support to persons with disabilities interested in becoming or remaining parents.

In carrying out the purposes of the priority, the technical assistance center shall:

- Collect and synthesize information from other NIDRR-funded projects and centers that could be relevant to parenting with a disability including, but not limited to, the Assistive Technology Projects;
- Collaborate with other NIDRR and OSEP-funded projects and centers that address issues related to parenting and to disability rights of persons with disabilities; and
- Establish a national toll-free telephone hotline and publish a quarterly newsletter.

## Invitation To Comment

Interested persons are invited to submit comments and recommendations regarding these proposed priorities.

All comments submitted in response to this notice will be available for public inspection, during and after the comment period, in Room 3424, Mary Switzer Building, 330 C Street S.W., Washington, D.C., between the hours of 9:00 a.m. and 5:00 p.m., Monday through Friday of each week except Federal holidays.

## Applicable Program Regulations

34 CFR Parts 350, 352, and 355.

**Program Authority:** 29 U.S.C. 760–762.

(Catalog of Federal Domestic Assistance Numbers: 84.133B, Rehabilitation Research and Training Center Program, 84.133D, Knowledge Dissemination and Utilization Program)

Dated: April 11, 1997.

**Judith E. Heumann,**

*Assistant Secretary for Special Education and Rehabilitative Services.*

[FR Doc. 97–10200 Filed 4–18–97; 8:45 am]

BILLING CODE 4000–01–P

federal register

Monday
April 21, 1997

# Part V

# Department of Treasury

## Bureau of Alcohol, Tobacco, and Firearms

## 27 CFR Part 178

## Residency Requirements for Persons Acquiring Firearms (97R–687P); Temporary Rule and Proposed Rule

**DEPARTMENT OF THE TREASURY**

**Bureau of Alcohol, Tobacco and Firearms**

**27 CFR Part 178**

**[T.D. ATF–389]**

**RIN 1512–AB66**

## Residency Requirements for Persons Acquiring Firearms (97R–687P)

**AGENCY:** Bureau of Alcohol, Tobacco and Firearms (ATF), Department of the Treasury.

**ACTION:** Temporary rule (Treasury decision).

**SUMMARY:** This temporary rule amends the regulations to provide for a firearms purchaser's affirmative statement of his or her State of residence on ATF Form 4473 (Firearms Transaction Record) and ATF Form 5300.35 (Statement of Intent to Obtain a Handgun) in acquiring a firearm from a Federal firearms licensee. The temporary rule also amends the regulations to require that aliens purchasing a firearm provide proof of residency through the use of substantiating documentation, such as utility bills or a lease agreement. In addition, the regulations are being amended to require that licensees examine a photo identification document from aliens purchasing firearms. Finally, the definition of ''State of residence'' is being amended to eliminate the language allowing aliens to establish residency by obtaining a letter from their embassy or consulate. The definition is also being amended to define more clearly ''State of residence.'' These regulations implement President Clinton's March 5, 1997, announcement of firearms initiatives intended to protect the American public from gun violence. The temporary rule will remain in effect until superseded by final regulations.

In the same separate part of this **Federal Register**, ATF is also issuing a notice of proposed rulemaking inviting comments on the temporary rule for a 90-day period following the publication date of this temporary rule.

**DATES:** The temporary regulations are effective April 21, 1997. Comments are due July 21, 1997.

**ADDRESSES:** Send written comments to: Chief, Regulations Branch; Bureau of Alcohol, Tobacco and Firearms; Washington, DC 20091–0221.

**FOR FURTHER INFORMATION CONTACT:** James P. Ficaretta, Regulations Branch, Bureau of Alcohol, Tobacco and Firearms, 650 Massachusetts Avenue, NW., Washington, DC 20226 (202–927–8230).

**SUPPLEMENTARY INFORMATION:**

### Background

On February 23, 1997, Ali Hassan Abu Kamal, a nonresident alien legally in the United States, opened fire on a group of tourists at the Empire State Building in New York City. Abu Kamal killed one individual and wounded six others before turning the firearm on himself and committing suicide. Abu Kamal entered the United States legally approximately 30 days prior to the incident. He acquired an identification card issued by the State of Florida that appeared to identify him as a resident of Florida. The address listed on the card turned out to be the address of a Florida hotel. Abu Kamal used the identification card to purchase a handgun from a licensed dealer in Florida which he transported to New York and used in the shooting incident.

Abu Kamal clearly was not a ''resident'' as that term is defined in the regulations in 27 CFR 178.11, since he had not resided in Florida for 90 days before the purchase of the handgun. However, the Firearms Transaction Record, ATF Form 4473, does not require an affirmative statement of a purchaser's State of residence or information documenting an alien's residence in the State of purchase for a period of 90 days.

The shooting by Abu Kamal is only one of a growing number of incidents involving the illegal acquisition of firearms by aliens. ATF has investigated a number of crimes committed by juveniles and gang members with firearms that are traced back to alien purchasers. ATF investigations also reveal that aliens frequently purchase firearms in the United States that are illegally exported.

In response to the Empire State Building tragedy, on March 5, 1997, the President directed Treasury Secretary Robert E. Rubin to restrict gun access by foreign visitors and to tighten up the residency requirements of the Federal firearms laws. Specifically, the President directed the Secretary to amend the forms completed by firearms purchasers to require them to affirmatively identify their State of residence. In the case of aliens legally in the United States, they would generally have to be a resident of the State where the sale takes place for the 90-day period preceding the sale. The President also directed that the regulations be amended to require that aliens purchasing firearms provide licensed gun dealers with proof of residency, such as utility bills, in addition to photo identification.

Section 922(b)(3) of the Gun Control Act of 1968 (GCA) makes it unlawful for a Federal firearms licensee (FFL) to sell or deliver any firearm to any person who the licensee knows or has reasonable cause to believe does not reside in the State in which the licensee's place of business is located. An exception is provided for over-the-counter transfers of a rifle or shotgun to out-of-State residents if the transfer fully complies with the State laws of the buyer and seller. Regulations which implement section 922(b)(3) are contained in 27 CFR 178.99(a).

Prior to making a transfer of a firearm to a nonlicensed individual, the regulations (27 CFR 178.124(c)) require the licensee to obtain a Form 4473 (Firearms Transaction Record) from the transferee (buyer) showing certain information, including the name, address, date and place of birth. Paragraph (c)(1) of this section provides that before transferring a firearm over-the-counter, the licensee must obtain from the transferee documentation establishing the purchaser's identity. However, existing regulations do not require that the licensee obtain from the transferee documentation establishing the purchaser's State of residence.

The term ''State of residence'' is defined in 27 CFR 178.11 as follows:

> The State in which an individual regularly resides, or maintains a home, or if such person is on active duty as a member of the United States Armed Forces, the State in which the person's permanent duty station is located: *Provided*, That an alien who is legally in the United States shall be considered to be a resident of the State in which (a) the alien is residing or has so resided for a period of at least 90 days prior to the date of sale or delivery of a firearm, or (b) the alien's embassy or consulate is located if the principal officer of such embassy or consulate issues a written statement to such alien authorizing the alien to acquire a firearm. Temporary stay in a State does not make the State of temporary stay the State of residence.

The Brady law, 18 U.S.C. § 922(s), generally imposes a waiting period of 5 business days before a licensee may sell, deliver, or transfer a handgun to a nonlicensed individual. Regulations implementing the Brady law require that, in States subject to the 5-day waiting period, licensees obtain a statement of the transferee's intent to obtain a handgun (ATF Form 5300.35) containing, among other information, the transferee's name, address, and date of birth appearing on a valid photo identification.

**Temporary Regulations**

In general, this temporary rule amends the regulations to require a firearms purchaser's affirmative statement of his or her State of residence on ATF Form 4473 and to request this information on ATF Form 5300.35 when acquiring a firearm from a Federal firearms licensee. In addition, in the case of an alien who is legally in the United States, the temporary rule will require the purchaser to provide the licensee with proof of residency through the use of substantiating documentation, such as utility bills or a lease agreement, which show that the individual has resided in the State continuously for at least 90 days prior to the transfer of the firearm. The regulations are also being amended to require that licensees obtain a photo identification document from aliens purchasing firearms. Photo identification is already required for handgun purchases by nonlicensees, including aliens (see 18 U.S.C. § 922(s)(1)) and 27 CFR 178.102(a)). The regulation extends the photo identification requirement to ALL firearms purchases by aliens.

Specifically, ATF is amending 27 CFR 178.124(c) to provide that, prior to making an over-the-counter transfer of a firearm, the licensee must obtain from the transferee a completed ATF Form 4473 (Firearms Transaction Record) which shows certain information, including an affirmative statement as to the transferee's State of residence. In addition, before transferring a firearm other than a rifle or shotgun, the licensee will, in the case of a nonlicensee who is an alien legally in the United States, obtain from the transferee documentation establishing that the transferee is a resident of the State in which the licensee's business premises is located. The licensee will also note on the form the documentation used. Examples of acceptable documentation include utility bills or a lease agreement which show that the purchaser has resided in the State continuously for at least 90 days prior to the transfer of the firearm.

Section 178.124(d), relating to an over-the-counter transfer of a shotgun or rifle, is being amended to require alien purchasers to present to the licensee documentation establishing that the transferee is a resident of any State and has resided in such State continuously for at least 90 days prior to the transfer of the firearm. Examples of acceptable documentation include utility bills or a lease agreement.

The regulations also require that licensees obtain a government issued photo identification document, as defined in § 178.11, from the alien purchaser. The licensee will note on the Form 4473 the documentation used.

Because the law permits the loan or rental of a firearm for temporary use for lawful sporting purposes to a nonlicensee who is not a resident of the State in which the licensee's business premises is located, 27 CFR 178.124(e) is being amended to provide that the residency requirements in paragraph (c)(1)(ii) do not apply to such transfers.

Section 178.124(f) specifies procedures for licensees transferring firearms to nonlicensees in non-over-the-counter transactions (e.g., mail order sales). This regulation is being amended to specifically make reference to the residency requirements on ATF Form 4473 for persons acquiring firearms.

With respect to the transfer of firearms curios or relics by licensed collectors to nonlicensees, a Form 4473 is not required. However, licensed collectors are required to maintain records of acquisition and disposition of firearms and to obtain identification from unlicensed transferees. Section 178.125 is being amended to provide that the licensee will, in the case of a transferee who is an alien legally in the United States, obtain from the transferee documentation establishing that the transferee is a resident of the State in which the licensee's business premises is located if the firearm curio or relic is other than a shotgun or rifle, or is a resident of any State and has resided in such State continuously for at least 90 days prior to the transfer of the firearm if the firearm curio or relic is a shotgun or rifle. This section is also being amended to require that licensed collectors obtain a government issued photo identification document from aliens purchasing firearms. The regulations will require the licensee to note on the Acquisition and Disposition Record the type of documentation and identification used. With respect to the residency requirement, examples of acceptable documentation include utility bills or a lease agreement which show that the transferee has resided in the State continuously for at least 90 days prior to the transfer of the firearm curio or relic.

ATF is also amending § 178.132(a)(2) with respect to the Statement of Intent to Obtain a Handgun (ATF Form 5300.35) to request that purchasers affirmatively state their State of residence. In the case of aliens who are legally in the United States, this would help identify those who do not meet the 90-day residency requirement. This information would be requested on the form because 18 U.S.C. § 922(s)(3) limits the information that can be required to be disclosed on the form.

Finally, the definition of ''State of residence'' in § 178.11 is being amended to eliminate the language allowing aliens to establish residency by obtaining a letter from their embassy or consulate. This amendment is necessary because such a letter could be obtained by a person having no actual residence in a State or intent to reside in the United States. Thus, the only way an alien can be a ''resident'' is by residing in a State for a period of at least 90 days. In addition, the definition and the examples following the definition are being amended to define more clearly State of residency.

**Executive Order 12866**

It has been determined that this temporary rule is not a significant regulatory action as defined in E.O. 12866. Therefore, a regulatory assessment is not required.

**Administrative Procedure Act**

In light of the recent Empire State Building tragedy, the growing number of incidents involving the illegal acquisitions of firearms by aliens, and the immediate need to protect the American public from gun violence, it is found to be impracticable and contrary to the public interest to issue this Treasury decision with notice and public procedure under 5 U.S.C. 553(b), or subject to the effective date limitation in section 553(d).

**Regulatory Flexibility Act**

The provisions of the Regulatory Flexibility Act relating to an initial and final regulatory flexibility analysis (5 U.S.C. 604) are not applicable to this temporary rule because the agency was not required to publish a notice of proposed rulemaking under 5 U.S.C. 553 or any other law. Accordingly, a regulatory flexibility analysis is not required.

**Paperwork Reduction Act**

This regulation is being issued without prior notice and public procedure pursuant to the Administrative Procedure Act (5 U.S.C. 553). For this reason, the collections of information contained in this regulation have been reviewed under the requirements of the Paperwork Reduction Act (44 U.S.C. 3507(j)) and, pending receipt and evaluation of public comments, approved by the Office of Management and Budget (OMB) under control numbers 1512–0129 and 1512–0130 (§ 178.124); 1512–0387 (§ 178.125); and 1512-0520 (§ 178.130). An agency may not conduct

or sponsor, and a person is not required to respond to, a collection of information unless it displays a valid control number assigned by the Office of Management and Budget.

The collections of information in this regulation are in 27 CFR 178.124, 178.125, and 178.130. This information is required to ensure that individuals purchasing firearms meet the residency requirements mandated by law. The likely respondents are individuals.

For further information concerning the collections of information, and where to submit comments on the collections of information, refer to the preamble to the cross-referenced notice of proposed rulemaking published elsewhere in this issue of the **Federal Register**.

### Drafting Information

The author of this document is James P. Ficaretta, Regulations Branch, Bureau of Alcohol, Tobacco and Firearms.

### List of Subjects in 27 CFR Part 178

Administrative practice and procedure, Arms and ammunition, Authority delegations, Customs duties and inspection, Exports, Imports, Military personnel, Penalties, Reporting requirements, Research, Seizures and forfeitures, and Transportation.

### Authority and Issuance

Accordingly, 27 CFR part 178 is amended as follows:

## PART 178—COMMERCE IN FIREARMS AND AMMUNITION

Paragraph 1. The authority citation for 27 CFR part 178 continues to read as follows:

**Authority:** 5 U.S.C. 552(a); 18 U.S.C. 847, 921–930; 44 U.S.C. 3504(h).

**Par. 2.** Section 178.11 is amended by revising the definition of ''State of residence'' to read as follows:

### § 178.11 Meaning of terms.

* * * * *

*State of residence*. The State in which an individual resides. An individual resides in a State if he or she is present in a State with the intention of making a home in that State. If an individual is on active duty as a member of the Armed Forces, the individual's State of residence is the State in which his or her permanent duty station is located. An alien who is legally in the United States shall be considered to be a resident of a State only if the alien is residing in the State and has resided in the State for a period of at least 90 days prior to the date of sale or delivery of a firearm. The following are examples that illustrate this definition:

Example 1. A maintains a home in State X. A travels to State Y on a hunting, fishing, business, or other type of trip. A does not become a resident of State Y by reason of such trip.

Example 2. A is a U.S. citizen and maintains a home in State X and a home in State Y. A resides in State X except for weekends or the summer months of the year and in State Y for the weekends or the summer months of the year. During the time that A actually resides in State X, A is a resident of State X, and during the time that A actually resides in State Y, A is a resident of State Y.

Example 3. A, an alien, travels on vacation or on a business trip to State X. Regardless of the length of time A spends in State X, A does not have a State of residence in State X. This is because A does not have a home in State X at which he has resided for at least 90 days.

* * * * *

**Par. 3**. Section 178.124 is amended by revising the first sentence in the introductory text of paragraph (c), by revising paragraphs (c)(1), (d), and (e), and by revising the third sentence in paragraph (f) to read as follows:

### § 178.124 Firearms transaction record.

* * * * *

(c) Prior to making an over-the-counter transfer of a firearm to a nonlicensee who is a resident of the State in which the licensee's business premises is located, the licensed importer, licensed manufacturer, or licensed dealer so transferring the firearm shall obtain a Form 4473 from the transferee showing the name, address (including county or similar political subdivision), whether the transferee is a citizen of the United States, State of residence, date and place of birth, height, weight, and race of the transferee, and certification by the transferee that the transferee is not prohibited by the Act from transporting or shipping a firearm in interstate or foreign commerce or receiving a firearm which has been shipped or transported in interstate or foreign commerce or possessing a firearm in or affecting commerce. * * *

(1)(i) Shall cause the transferee to be identified in any manner customarily used in commercial transactions (e.g., a driver's license), and shall note on the form the method used: *Provided,* That in the case of an alien legally in the United States, shall verify the identity of the transferee by examining an identification document (as defined in § 178.11), and shall note on the form the type of identification used;

(ii) Shall, in the case of a transferee who is an alien legally in the United States, cause the transferee to present documentation establishing that the transferee is a resident of the State (as defined in § 178.11) in which the licensee's business premises is located, and shall note on the form the documentation used. Examples of acceptable documentation include utility bills or a lease agreement which show that the transferee has resided in the State continuously for at least 90 days prior to the transfer of the firearm; and

(2) * * *

(d) Prior to making an over-the-counter transfer of a shotgun or rifle under the provisions contained in § 178.96(c) to a nonlicensee who is not a resident of the State in which the licensee's business premises is located, the licensee so transferring the shotgun or rifle, and such transferee, shall comply with the requirements of paragraph (c) of this section: *Provided,* That in the case of a transferee who is an alien legally in the United States, the documentation required by paragraph (c)(1)(ii) of this section need only establish that the transferee is a resident of any State and has resided in such State continuously for at least 90 days prior to the transfer of the firearm. Examples of acceptable documentation include utility bills or a lease agreement. The licensee shall note on the form the documentation used.

(e) Prior to making a transfer of a firearm to any nonlicensee who is not a resident of the State in which the licensee's business premises is located, and such nonlicensee is acquiring the firearm by loan or rental from the licensee for temporary use for lawful sporting purposes, the licensed importer, licensed manufacturer, or licensed dealer so furnishing the firearm, and such transferee, shall comply with the provisions of paragraph (c) of this section, except for the provisions of paragraph (c)(1)(ii).

(f) * * * The transferee also must date and execute the sworn statement contained on the form showing, in case the firearm to be transferred is a firearm other than a shotgun or rifle, the transferee is 21 years or more of age; in case the firearm to be transferred is a shotgun or rifle, the transferee is 18 years or more of age; whether the transferee is a citizen of the United States; the transferee's State of residence, and in the case of a transferee who is an alien legally in the United States, the transferee has resided in that State continuously for at least 90 days prior to the transfer of the firearm; the transferee is not prohibited by the provisions of the Act from shipping or transporting a firearm in interstate or

foreign commerce or receiving a firearm which has been shipped or transported in interstate or foreign commerce or possessing a firearm in or affecting commerce; and the transferee's receipt of the firearm would not be in violation of any statute of the State or published ordinance applicable to the locality in which the transferee resides. * * *

* * * * *

**Par. 4**. Section 178.125(f) is amended by removing the text following the seventh sentence and in its place adding a new phrase and paragraphs (f)(1) through (f)(3) to read as follows:

**§ 178.125 Record of receipt and disposition.**

* * * * *

(f) *Firearms receipt and disposition by licensed collectors.* * * * In addition, the licensee shall—

(1) Cause the transferee, if other than a licensee, to be identified in any manner customarily used in commercial transactions (e.g., a driver's license), and note on the record the method used, and

(2) In the case of a transferee who is an alien legally in the United States and who is other than a licensee—

(i) Verify the identity of the transferee by examining an identification document (as defined in § 178.11), and

(ii) Cause the transferee to present documentation establishing that the transferee is a resident of the State (as defined in § 178.11) in which the licensee's business premises is located if the firearm curio or relic is other than a shotgun or rifle, and note on the record the documentation used or is a resident of any State and has resided in such State continuously for at least 90 days prior to the transfer of the firearm if the firearm curio or relic is a shotgun or rifle and shall note on the record the documentation used. Examples of acceptable documentation include utility bills or a lease agreement which show that the transferee has resided in the State continuously for at least 90 days prior to the transfer of the firearm curio or relic.

(3) The format required for the record of receipt and disposition of firearms by collectors is as follows:

FIREARMS COLLECTORS ACQUISITION AND DISPOSITION RECORD

| Description of firearm | | | | | Receipt | | Disposition | | | | |
|---|---|---|---|---|---|---|---|---|---|---|---|
| Manufacturer and/or importer | Model | Serial No. | Type | Caliber or gauge | Date | Name and address or name and license No. | Date | Name and address or name and license No. | Date of birth if non-licensee | Driver's license No. or other identification if non-licensee | For transfers to aliens, documentation used to establish residency |
| | | | | | | | | | | | |

* * * * *

**Par. 5**. Section 178.130(a)(2) is revised to read as follows:

**§ 178.130 Statement of intent to obtain a handgun after February 27, 1994, and before November 30, 1998.**

(a)(1) * * *

(2) In order to establish residency and to facilitate the transfer of a handgun and enable the chief law enforcement officer to verify the identity of the person acquiring the handgun, Form 5300.35 requests certain additional optional information. This information includes the social security number, height, weight, sex, alien registration number, whether the person is a citizen of the United States, State of residence, and place of birth of the transferee. Such information may help ensure the lawfulness of the sale and avoid the possibility of the transferee being misidentified as a felon or other prohibited person.

* * * * *

Signed: April 4, 1997.

**John W. Magaw,**

*Director.*

Approved: April 11, 1997.

**John P. Simpson,**

*Deputy Assistant Secretary (Regulatory, Tariff and Trade Enforcement).*

[FR Doc. 97–10242 Filed 4–18–97; 8:45 am]

BILLING CODE 4810–31–P

## DEPARTMENT OF THE TREASURY

## Bureau of Alcohol, Tobacco and Firearms

## 27 CFR Part 178

**[Notice No. 849]**

**RIN 1512–AB66**

## Residency Requirements for Persons Acquiring Firearms (97R–687P)

**AGENCY:** Bureau of Alcohol, Tobacco and Firearms (ATF), Department of the Treasury.

**ACTION:** Proposed rulemaking by cross reference.

**SUMMARY:** In the same separate part of this **Federal Register**, the Bureau of Alcohol, Tobacco and Firearms (ATF) is issuing a temporary rule amending the regulations to provide for a firearms purchaser's affirmative statement of his or her State of residence on ATF Form 4473 (Firearms Transaction Record) and ATF Form 5300.35 (Statement of Intent to Obtain a Handgun) in acquiring a firearm from a Federal firearms licensee. The temporary rule also amends the regulations to require that aliens purchasing a firearm provide proof of residency through the use of substantiating documentation, such as utility bills or a lease agreement. In addition, the regulations are being amended to require that licensees examine a photo identification document from aliens purchasing firearms. Finally, the definition of ''State of residence'' is being amended to eliminate the language allowing aliens to establish residency by obtaining a letter from their embassy or consulate. The definition is also being amended to define more clearly ''State of residence.'' These regulations implement President Clinton's March 5, 1997, announcement of firearms initiatives intended to protect the American public from gun violence. The temporary regulations also serve as the text of this notice of proposed rulemaking for final regulations.

**DATES:** Written comments must be received on or before July 21, 1997.

**ADDRESSES:** Send written comments to: Chief, Regulations Branch; Bureau of Alcohol, Tobacco and Firearms; P.O. Box 50221; Washington, DC 20091–0221; *ATTN: Notice No. 849.*

**FOR FURTHER INFORMATION CONTACT:** James P. Ficaretta, Regulations Branch, Bureau of Alcohol, Tobacco and Firearms, 650 Massachusetts Avenue, NW., Washington, DC 20226 (202–927–8230).

**SUPPLEMENTARY INFORMATION:**

### Executive Order 12866

It has been determined that this proposed regulation is not a significant regulatory action as defined in E.O. 12866. Accordingly, this proposal is not subject to the analysis required by this Executive Order.

### Regulatory Flexibility Act

It is hereby certified that these proposed regulations will not have a significant economic impact on a substantial number of small entities. The proposed regulations are necessary to implement the President's March 5, 1997, announcement of firearms initiatives intended to protect the American public from gun violence. Furthermore, the burden placed on firearms licensees for the collections of information is minimal. Accordingly, a regulatory flexibility analysis is not required.

### Paperwork Reduction Act

The collections of information contained in this notice of proposed rulemaking have been submitted to the Office of Management and Budget for review in accordance with the Paperwork Reduction Act of 1995 (44 U.S.C. 3507(d)). Comments on the collections of information should be sent to the Office of Management and Budget, Attention: Desk Officer for the Department of the Treasury, Bureau of Alcohol, Tobacco and Firearms, Office of Information and Regulatory Affairs, Washington, DC, 20503, with copies to the Chief, Document Services Branch, Room 3450, Bureau of Alcohol, Tobacco and Firearms, 650 Massachusetts Avenue, NW, Washington, DC 20226. Comments are specifically requested concerning:

Whether the proposed collections of information are necessary for the proper performance of the function of the Bureau of Alcohol, Tobacco and Firearms, including whether the information will have practical utility; the accuracy of the estimated burden associated with the proposed collections of information (see below), and; how the burden of complying with the proposed collections of information may be minimized, including through the application of automated collection techniques or other forms of information technology.

The collections of information in this proposed regulation are in 27 CFR 178.124, 178.125, and 178.130. This information is required to ensure that individuals purchasing firearms meet the residency requirements mandated by law. The likely respondents are individuals.

*Estimated total annual reporting burden:* 1512–0129—1,026,000 hours; 1512–0130—11,843 hours; 1512–0387—43,041 hours; 1512–0520—478,300 hours.

*Estimated average annual burden hours per respondent:* 1512–0129—.171 hours; 1512–0130—.12 hours; 1512–0387—3 hours; 1512–0520—.10 hours.

*Estimated number of respondents:* 1512–0129—6,000,000; 1512–0130—20,900; 1512–0387—14,347; 1512-0520—2,000,000.

*Estimated annual frequency of responses:* 1512–0129—1; 1512–0130—1; 1512–0387—1; 1512–0520—1.

An agency may not conduct or sponsor, and a person is not required to respond to, a collection of information unless it displays a valid control number assigned by the Office of Management and Budget.

### Public Participation

ATF requests comments on the temporary regulations from all interested persons. Comments received on or before the closing date will be carefully considered. Comments received after that date will be given the same consideration if it is practical to do so, but assurance of consideration cannot be given except as to comments received on or before the closing date.

ATF will not recognize any material in comments as confidential. Comments may be disclosed to the public. Any material which the commenter considers to be confidential or inappropriate for disclosure to the public should not be included in the comment. The name of the person submitting a comment is not exempt from disclosure.

Any interested person who desires an opportunity to comment orally at a public hearing should submit his or her request, in writing, to the Director within the 90-day comment period. The Director, however, reserves the right to determine, in light of all circumstances, whether a public hearing is necessary.

The temporary regulations in this issue of the **Federal Register** amend the regulations in 27 CFR part 178. For the text of the temporary regulations, see T.D. ATF–389 published in the same separate part of this issue of the **Federal Register**.

### Drafting Information

The author of this document is James P. Ficaretta, Regulations Branch, Bureau of Alcohol, Tobacco and Firearms.

Signed: April 4, 1997.

**John W. Magaw,**

*Director.*

Approved: April 11, 1997.

**John P. Simpson,**

*Deputy Assistant Secretary, (Regulatory, Tariff and Trade Enforcement).*

[FR Doc. 97–10241 Filed 4–18–97; 8:45 am]

**BILLING CODE 4810–31–P**

federal register

Monday
April 21, 1997

# Part VI

# Department of the Interior

## Office of Surface Mining Reclamation and Enforcement

## 30 CFR Parts 773, 778, and 843
## Ownership and Control; Permit Application Process; Improvidently Issued Permits; Interim Final Rule

**DEPARTMENT OF THE INTERIOR**

**Office of Surface Mining Reclamation and Enforcement**

**30 CFR Parts 773, 778, and 843**

**RIN 1029–AB–91**

# Ownership and Control; Permit Application Process; Improvidently Issued Permits

**AGENCY:** Office of Surface Mining Reclamation and Enforcement, Interior.

**ACTION:** Interim final rule.

**SUMMARY:** The Office of Surface Mining Reclamation and Enforcement (OSM) is amending its regulations governing permit application information requirements; criteria for permit issuance; and criteria, procedures, and sanctions for improvidently issued permits. The affected provisions generally address ownership and control information and compliance review requirements. This action is being taken in response to a decision by the U.S. Court of Appeals for the District of Columbia Circuit invalidating the previous rules as inconsistent with the Surface Mining Control and Reclamation Act of 1977 (SMCRA or the Act). The court held that SMCRA authorizes the regulatory authority to block issuance of a permit only for unabated violations incurred by the applicant or entities owned or controlled by the applicant, not, as provided in the previous rules, for violations incurred by any person who owns or controls the permittee. The rules being promulgated today cure this defect. Because of the urgent need to fill the void created by the court's decision, OSM is invoking the good cause exemptions of the Administrative Procedure Act and is adopting these rules on an interim final basis, effective April 3, 1997.

**EFFECTIVE DATE:** April 3, 1997.

**FOR FURTHER INFORMATION CONTACT:** Nancy Broderick or Dennis Rice, Office of Surface Mining Reclamation and Enforcement, U.S. Department of Interior, 1951 Constitution Ave., NW., Washington, DC 20240. Telephone: (202) 208–2700 or 2829. E-mail address; nbroderi@osmre.gov or drice@osmre.gov. Additional information concerning OSM, this rule, and related documents may be found on OSM's home page at hhtp://www.osmre.gov.

**SUPPLEMENTARY INFORMATION:**

**Table of Contents**

I. Background.
II. Rationale for Invoking APA Good Cause Exemptions.
III. Discussion of Interim Final Rules.
A. Section 773.5–Definitions.
B. Section 773.15(b)—Permit Block.
C. Section 773.15(e)—Final Compliance Review.
D. Section 773.17(i)—Permit Condition.
E. Sections 773.20 and 773.21—Improvidently Issued Permits.
F. Section 778.10—Information Collection.
G. Section 778.13—Organizational and Ownership Information Requirements for Permit Applications.
H. Section 778.14—Compliance Information Requirements for Permit Applications.
I. Section 843.11(g)—Notification Following Issuance of Cessation Order.
J. Section 843.21—Federal Procedures for Improvidently Issued State Permits.
K. Effect in Federal Program States and on Indian Lands.
L. Effect on State Programs.
M. Comparison of Interim Final Rule Language with Prior Rule Language.
IV. Procedural Matters.

## I. Background

Section 510(c) of SMCRA, 30 U.S.C. 1260(c), requires that each application for a permit to conduct surface coal mining operations include a schedule listing ''any and all notices of violation of this Act and any law, rule, or regulation of the United States, or of any department or agency in the United States pertaining to air or water environmental protection incurred by the applicant in connection with any surface coal mining operation during the three-year period prior to the date of application.'' It further specifies that ''[w]here the schedule or other information available to the regulatory authority indicates that any surface coal mining operation owned or controlled by the applicant is currently in violation of this Act or such other laws referred to in this subsection, the permit shall not be issued until the applicant submits proof that such violation has been corrected, or is in the process of being corrected to the satisfaction of the regulatory authority, department, or agency which has jurisdiction over such violation.'' Finally, it provides that ''no permit shall be issued to an applicant after a finding by the regulatory authority, after opportunity for hearing, that the applicant, or the operator specified in the application, controls or has controlled mining operations with a demonstrated pattern of willful violations of this Act of such nature and duration with such resulting irreparable damage to the environment as to indicate an intent not to comply with the provisions of this Act.'' *Id.*

To implement these provisions of the Act, OSM adopted three sets of regulations known respectively as the ownership and control rule (53 FR 38868, October 3, 1998), the permit information rule (54 FR 8982, March 2, 1989), and the improvidently issued permits rule, also known as the permit rescission rule (54 FR 18438, April 28, 1989). The ownership and control rule revised 30 CFR 773.15(b) to prohibit permit issuance on the basis of unabated violations attributed to either the applicant or any person who owns or controls the applicant. It also defined the terms ''owns or controls'' and ''owned or controlled'' as used in that rule and as the latter term is used in section 510(c) of SMCRA. The permit information rule revised 30 CFR 778.13 and 778.14 to establish permit application information and compliance review and reporting requirements consistent with the new ownership and control definition and the revisions that the ownership and control rule made to 30 CFR 773.15(b). The improvidently issued permits rule established criteria and procedures for determining when an existing permit has been issued improvidently; i.e., in violation of 30 CFR 773.15(b) and section 510(c) of the Act. This rule also included remedial measures for improvidently issued permits.

The Applicant/Violator System procedures rule published on October 28, 1994 (59 FR 54306) modified several provisions of the ownership and control, permit information, and improvidently issued permits rules. In addition, the remining rule published on November 27, 1995 (60 FR 58480) added paragraph (b)(4) to 30 CFR 773.15. None of these revisions was at issue in the litigation discussed below.

The National Mining Association and the National Wildlife Federation filed suit challenging the validity of the ownership and control, permit information, and improvidently issued permits rules on a variety of grounds. On August 31, 1995, the U.S. District Court for the District of Columbia granted summary judgment in favor of OSM on all claims. See *National Wildlife Fed'n v. Babbitt*, Civ. Nos. 88–3117, 88–3464, 88–3470 (consolidated) (Aug. 31, 1995), slip op. at 25: *National Wildlife Fed'n v. Babbitt*, Civ. Nos. 89–1130, 89–1167 (consolidated) (Aug. 31, 1995), slip op. at 12: *National Wildlife Fed'n v. Babbitt*, Civ. Nos. 89–1751, 89–1811 (consolidated) (Aug. 31, 1995), slip op. at 19.

On appeal, however, in a decision that took effect April 4, 1997, the U.S. Court of Appeals for the District of Columbia Circuit found the ownership and control rule to be ''unlawful'' because 30 CFR 773.15(b)(1) blocks

permit issuance for violations at operations owned or controlled by any person who owns or controls the applicant, a provision that, according to the court, ''conflicts with the plain meaning of section 510(c).'' *National Minning Ass'n v. United States Dept. of the Interior,* 105 F.3d 691, 694 (D.C. Cir. 1997) (''*NMA—O&C*''). The court ruled that section 510(c) is ''unmistakably clear'' in stating that a permit may not be issued ''when 'any surface coal mining operation owned or controlled by the applicant' is currently in violation of SMCRA.'' In addition, the court held, with little elaboration, that because the permit information rule and the permit rescission (improvidently issued permits) rule ''are centered on the ownership and control rule * * *, they too must fall.'' *Id.* at 696.

Nothing is the court's decision eliminates the responsibility of OSM and State regulatory authorities to implement the requirements of sections 507(b) and 510(c) of the Act. Nor does it terminate the Applicant/Violator System, the database that OSM and State regulatory authorities use to track violations and violators, although it will impact the use of that data. OSM has taken steps to modify system reports and recommendations to reflect the court's decision. Today's rulemaking action represents OSM's initial effort to conform its regulations to the court's decision. OSM intends to propose further regulatory revisions in the near future in accordance with standard notice and comment procedures.

## II. Rationale for Invoking APA Good Cause Exemptions

The court's action in striking the ownership and control, permit information, and improvidently issued permits rules creates considerable uncertainty with respect to permit application information requirements and implementation of the statutory permit block sanction in section 510(c). This sanction has proven to be one of the most effective incentives for compliance with the requirements of the Act. It has prevented persons who are either unable or unwilling to adhere to the environmental protection standards of the Act from repeatedly causing environmental problems on additional sites.

Under sections 101(f) and 503 of SMCRA, States have the primary responsibility for regulating surface coal mining and reclamation operations. Once a State attains primacy (an approved regulatory program under section 503 of the Act), OSM's role is reduced to that of assistance and oversight. At present, 24 of the 27 coal-producing States have achieved primacy.

At least 5 State programs include provisions that automatically repeal or require review of any State program counterpart to a Federal rule remanded or otherwise invalidated by the courts. In addition, another 7 States have laws or regulations that prohibit the promulgation of regulations that are more stringent than Federal requirements. If there are no Federal rules in place, OSM expects that most of these States will suspend or otherwise remove the corresponding State provisions. While removal of a State program rule, either automatically or by legislative or administrative action, is often rapid restoration through SMCRA's program amendment process is both lengthy and complex, often requiring a number of years to accomplish. Regardless of the mechanism by which the programmatic void comes into being, the result will be an absence of information that will translate into the issuance of permits to persons who are not entitled to receive them under section 510(c) of the Act.

Prior to establishment of the Applicant/Violator System, OSM and State regulatory authorities had few sources of information about industry practices and enterprises except for disclosures in permit applications. They also lacked a regulatory structure or centralized data processing system to track persons or entities which owned or controlled operations with unabated violations as they reincorporated or renamed themselves, used a series of contract miners, or moved from State to State. The lack of such a system is especially significant since, as noted at 53 FR 38886 (October 3, 1988), over half of all Federal permit applicants between March 1985 and April 1986 had unabated violations, unpaid abandoned mine land reclamation fees, or unpaid civil penalties, although some of these outstanding obligations were under appeal. The problem was particularly difficult to address when an applicant for a permit in one State owned or controlled an operation with an unabated violation in another State, since there were few mechanisms by which States exchanged information.

The effectiveness of the section 510(c) permit block sanction depends upon maintenance of a reliable nationwide database (currently, the Applicant/Violator System) on permit applicants, organizational relationships, and violations. Otherwise, violators can simply move from State to State and company to company to evade their reclamation obligations and other responsibilities under the Act. States are primarily responsible for inputting data into this system. Therefore, it is imperative that the integrity of State programs, including permit application information requirements, be maintained. State program provisions are relatively easy to delete, but difficult and time-consuming to restore.

The court's decision creates a regulatory gap that would result in substantial uncertainty and confusion regarding permit application information requirements, use of the Applicant/Violator System, and the identification and handling of improvidently issued permits. Such regulatory confusion would be contrary to the public interest because issuance of permits to persons who are not entitled to receive them under the Act, as would likely occur in the absence of consistent permit application content, review, and reporting requirements, would prove injurious to the environment and public health and safety. The schedule for issuance of the court's mandate allows insufficient time for public notice and comment on replacement regulations before the regulatory gap occurs. Therefore, following normal notice and comment procedures under the Administrative Procedure Act (APA) would be impracticable and contrary to the public interest.

To avoid creation of a regulatory gap, OSM is now promulgating replacement regulations on an interim final basis, as authorized by the APA at 5 U.S.C. 553(b)(3)(B). This provision of the APA provides a ''good cause'' exemption that allows an agency to issue a rule without prior notice or opportunity for public comment ''when the agency for good cause finds (and incorporates the finding and a brief statement of the reasons therefor in the rules issued) that notice and public procedure thereon are impracticable, unnecessary, or contrary to the public interest.'' As discussed above, promulgation of an interim final rule without prior notice or opportunity to comment is in the public interest because it avoids creation of a regulatory gap and the adverse impacts associated with such a gap. The requirements and procedures in the interim final rules have gained widespread acceptance among State regulatory authorities. Furthermore, most provisions of the rules being promulgated today are substantively identical to those previously promulgated in accordance with the standard notice and comment procedures of the APA. The only substantive changes are those that address the specific provisions that the court found to be in conflict with, or

potentially in conflict with, the ''unmistakably clear'' language of section 510(c) of SMCRA.

Using the same rationale, OSM also is availing itself of the good cause exemption at 5 U.S.C. 553(d)(3) to the APA requirement that rules be published at least 30 days prior to their effective date. To avoid any regulatory gap, the effective date of the rules being published today is April 3, 1997.

The interim final rules being published today are only interim measures intended to ensure that implementation of the court's decision does not result in a regulatory gap or substantial confusion in the regulatory community or the regulated industry. OSM is committed to exploring various methods of implementing the court's observation in *NMA–O&C* that ''OSM has leeway in determining who the 'applicant' is.'' *Id.* at 695. The agency intends to seek public comment on any resulting proposed regulatory changes.

## III. Discussion of Interim Final Rules

The rulemaking actions that OSM is taking today remedy the defects identified by the court in *NMA–O&C.* They also preserve those aspects of the previous rules to which the court expressed no specific objection. These measures are needed to fully and properly implement the permit block sanction of section 510(c) of SMCRA and to flesh out other statutory provisions, such as the permit application information requirements of paragraphs (b)(4) and (b)(5) of section 507 of the Act.

Nothing in the following findings or the rules to which they pertain affects the regulatory authority's power or responsibility to determine whether the nominal applicant is the true applicant to which the court refers. Nor do these findings or rules affect the regulatory authority's power to pierce the corporate veil or to withhold a permit, which, if issued, would violate a court order.

### *A. Section 773.5—Definitions*

On October 3, 1988 (53 FR 38868), OSM amended its regulations at 30 CFR 773.5 by adding a definition of the terms ''owned or controlled'' and ''owns or controls.'' This definition determines, in part, what type of information a permit applicant must submit under 30 CFR 778.13 and the circumstances under which the section 510(c) permit block sanction would apply under 30 CFR 773.15(b).

The reach of the definition depends on the context in which these terms are used in a specific regulation. For example, as revised and repromulgated in this rulemaking in response to the court's decision, 30 CFR 773.15(b) refers only to persons owned or controlled by the applicant or operations that the applicant controls or has controlled. Therefore, in this context, the definition would be used only to determine which entities the applicant owns or controls, not which entities own or control the applicant. As another example, 30 CFR 778.13(c), as revised and repromulgated in this rulemaking, provides that a permit application must include identifying information about persons who own or control the applicant. In this context, the definition would be used to determine which individuals or entities own or control the applicant, not which entities are owned or controlled by the applicant. This information is needed to verify the applicant's statement under section 507(b)(5) of the Act concerning bond forfeitures and permit revocations for operations under common control with the applicant. It also incorporates the ownership and control information requirements of section 507(b)(4) of SMCRA, which, the court noted, requires information relevant to statutory provisions other than the section 510(c) permit block sanction, such as the individual civil penalty sanction of section 518(f) of the Act. This information would not, however, be used for purposes of blocking permit issuance under 30 CFR 773.15(b) in a manner inconsistent with the court's decision.

Hence, the definition itself presents no conflict with the court's interpretation of section 510(c) of the Act in *NMA—O&C,* and OSM is repromulgating the definition without substantive change as part of the rulemaking action being published today. The rationale for the text of the definition is set forth in detail in the preamble to the 1988 rulemaking at 53 FR 38868–80 (October 3, 1988).

### *B. Section 773.15(b)—Permit Block*

On October 3, 1988, OSM revised 30 CFR 773.15(b) to expand the scope of the compliance review of permit applications and to expressly require the withholding of a permit when persons who own or control the applicant own or control operations with unabated violations. In *NMA—O&C,* the court held that this sanction applies only to violations incurred by the applicant or entities owned or controlled by the applicant, although the court left some room for the regulatory authority to determine the true applicant. *Id.* at 695. Therefore, the interim final rule being promulgated today does not include the language in the version of 30 CFR 773.15(b)(1) and (b)(3) promulgated in 1988 that applied the permit block sanction to violations incurred by persons who own or control the applicant.

Since there is nothing in the remainder of the 1988 changes to 30 CFR 773.15(b) (or the subsequent revisions in 1994 and 1995) that presents a conflict with the court's interpretation of section 510(c) of the Act in *NMA—O&C,* OSM is repromulgating the remainder of this paragraph without substantive change as part of the interim final rule being published today. The rationale for the other 1988, 1994, and 1995 changes, which include criteria for conditional issuance of a permit, provisions concerning the presumption that a notice of violation is in the process of abatement, and a special exception for remaining operations, is set forth in detail in the preambles to the 1988 rulemaking at 53 FR 38880–89 (October 3, 1988), the 1994 rulemaking at 59 FR 4322–24 (October 28, 1994), and the 1995 rulemaking at 60 FR 58482–86 (November 27, 1995).

### *C. Section 773.15(e)—Final Compliance Review*

On March 2, 1989 (54 FR 8982), OSM adopted 30 CFR 773.15(e), which required that before issuing a permit, the regulatory authority reconsider its initial compliance review in light of any new information submitted pursuant to 30 CFR 778.13(i) and 778.14(d). In *NMA—O&C,* the court was silent on this aspect of the permit information rule. Since its contents do not present a conflict with the court's findings concerning the scope of the section 510(c) permit block, OSM is repromulgating it in substantively identical form as part of this interim final rule. In keeping with the changes to 30 CFR 778.13, the new rule replaces the reference to 30 CFR 778.13(i) with a reference to its new designation, 30 CFR 778.13(k).

### *D. Section 773.17(i)—Permit Condition*

On March 2, 1989 (54 FR 8982), OSM adopted 30 CFR 773.17(i), which required that each permit include a condition obligating the permittee to update the information required by 30 CFR 778.13(c), which pertains to the identity and organizational position and relationship of persons who own or control the applicant, whenever the permittee receives a cessation order. The preamble to the 1989 rulemaking at 54 FR 8982–83 explains that the purpose of this condition was to reveal the identity of persons who own or control the permittee, and then use the

information collected to block issuance of permits to these persons pursuant to 30 CFR 773.15(b). However, in *NMA—O&C,* the court held that section 510(c) of the Act does not allow the blocking of permit issuance on the basis of violations incurred by persons who own or control the applicant. Therefore, the information can no longer be used for its original purpose. However, as noted at 54 FR 8986 (March 2, 1989) in the preamble to a related provision in 30 CFR 843.11(g), the information collected through this condition has other uses, such as the identification of persons against whom individual civil penalties may be assessed under 30 CFR Part 846 and section 518(f) of the Act. Therefore, OSM is repromulgating this permit condition in substantively identical form as part of the interim final rule being promulgated today, although its designation is now paragraph (h), which was previously reserved, instead of paragraph (i).

*E. Section 773.20 and 773.21—Improvidently Issued Permits*

On April 28, 1989 (54 FR 18438), OSM promulgated 30 CFR 773.20 and 773.21 to establish procedures and criteria for (1) determining when a permit had been improvidently issued, and (2) applying appropriate remedial measures. In *NMA—O&C,* the court struck down these rules based on a finding that they ''are centered on the ownership and control rule,'' which the court found to exceed the mandate of SMCRA. *Id.* at 696. In support of its decision, the court pointed to the reference to ownership or control links in 30 CFR 773.20(b)(1)(iii).

Accordingly, the interim final rule being published today replaces the term ''ownership or control link'' (and related language concerning ownership and control links and responsibility for violations, penalties, or fees) in 30 CFR 773.20(b)(1)(iii), 773.20(b)(2)(ii), and 773.21(a)(4) with more specific language that applies the provisions of these rules only to situations in which the permittee or any person owned or controlled by the permittee is responsible for the violation, penalty, or fee.

OSM also is revising 30 CFR 773.20(b)(1)(ii)(B), 773.20(c)(1) (i) and (ii), and 30 CFR 773.21(a) (2) and (3) to either eliminate the phrase ''the permittee or other person responsible'' or replace it with language that clarifies that the rule applies only to violations, penalties, and fees for which the permittee or persons owned or controlled by the permittee are responsible. OSM is making these changes to ensure that 30 CFR 773.20 and 773.21 are applied in a manner consistent with the revisions to 30 CFR 773.15(b) and the court's decision on the scope of section 510(c) of the Act.

Since there is nothing in the remainder of the 1989 version of 30 CFR 773.20 and 773.21 (or the subsequent revisions in 1994) that presents a conflict with the court's interpretation of section 510(c) of the Act in *NMA—O&C,* OSM is repromulgating the remainder of these sections without substantive change as part of the interim final rule being published today. The rationale for these procedural requirements and criteria for improvidently issued permit is set forth in detail in the preambles to the 1989 rulemaking at 54 FR 18439–62 (April 28, 1989) and the 1994 rulemaking at 59 FR 54325–29 (October 28, 1994). However, in view of the court decision and the changes in wording of these rules and 30 CFR 773.15(b), the discussions of ownership or control links in the preambles to previous versions of these rules no longer apply in full, especially Part II of the violations review criteria set forth in the April 28, 1989 preamble at 54 FR 18440–41. Similarly, the explanation of the meaning of ''other person responsible'' at 54 FR 18447 under the heading ''Inconsistent Terminology'' and at 54 FR 18455 under the heading ''Ownership and Control Relationships Covered'' is no longer fully applicable, especially since the revised versions of the rules no longer include this term.

*F. Section 778.10—Information Collection*

In *NMA—O&C* at 696, the court struck down the permit information rule, of which this section was a part. Since the contents of this section do not present a conflict with the court's holding on the scope of the section 510(c) permit block sanction, OSM is repromulgating it in revised form as part of the interim final rule being published today. The revisions reflect current Departmental guidance concerning format and content.

*G. Section 778.13—Organizational and Ownership Information Requirements for Permit Applications*

On March 2, 1989 (54 FR 8982), OSM promulgated revised permit application information requirements at 30 CFR 778.13 to conform these requirements to the definition of '' 'owned or controlled or' 'owns or controls' '' at 30 CFR 773.5. In *NMA—O&C,* the court struck down the revised rules based on a finding that they ''are centered on the ownership and control rule,'' which the court found to exceed the mandate of SMCRA. *Id.* at 696. In support of its decision, the court pointed to 30 CFR 778.13(d), which requires information pertaining to any surface coal mining operation owned or controlled by either the applicant or by any person who owns or controls the applicant under the definition of owned or controlled and owns or controls in 30 CFR 773.5.

Accordingly, the interim final rule being published today modifies the language of former 30 CFR 778.13(d) [now 30 CFR 778.13(f)] to restrict its scope to operations owned or controlled by the applicant. OSM also is:

- Recodifying former 30 CFR 778.13(c)(4) as paragraph (d) and revising it to apply only to the applicant and each partner or principal shareholder of the applicant in accordance with the language of section 507(b)(4) of the Act;
- Recodifying former 30 CFR 778.13(c)(5) as paragraph (e) and revising it to apply only to the applicant in accordance with the language of section 507(b)(3) of the Act; and
- Redesignating former 30 CFR 778.13 (d) through (j) as paragraphs (f) through (l), respectively.

Under revised 30 CFR 778.13(c), the application must continue to include identifying information about persons who own or control the applicant. This information is needed to verify the applicant's statement under section 507(b)(5) of the Act as to ''whether the applicant, any subsidiary, affiliate, or persons controlled by or under common control with the applicant'' has ever forfeited a mining bond or had a mining permit suspended or revoked within the 5-year period preceding the date of application. Revised 30 CFR 778.13(c) also is based upon and generally analogous to the ownership and control information requirements of section 507(b)(4) of SMCRA. The court noted that this section of the Act requires information relevant to statutory provisions other than the section 510(c) permit block sanction, such as the individual civil penalty sanction of section 518(f) of the Act. The court also observed that ''OSM or the state regulatory authority can use the information required under section 507(b) to determine who the real applicant is—i.e., to pierce the corporate veil in cases of subterfuge in order to ensure that it has the true applicant before it.'' *Id.* at 695. The information required under revised 30 CFR 778.13(c) will improve the ability of OSM and state regulatory authorities to initiate these types of enforcement and compliance measures.

Since there is nothing in the remainder of the 1989 version of 30 CFR

778.13 that presents a conflict with the court's interpretation of section 510(c) of the Act in *NMA—O&C,* OSM is repromulgating the remainder of this section without substantive change (apart from redesignation of paragraphs) as part of the interim final rule being published today. The rationale for these permit application information requirements is set forth in the preamble to the 1989 rulemaking at 54 FR 8983–90 (March 2, 1989).

*H. Section 778.14—Compliance Information Requirements for Permit Applications*

On March 2, 1989 (54 FR 8982), OSM promulgated revised permit application information requirements at 30 CFR 778.14. Among other things, these regulations required information about unabated violations and other compliance data concerning persons who own or control the applicant. In NMA—O&C, the court struck down the revised rules based on a finding that they ''are centered on the ownership and control rule,'' which the court found to exceed the mandate of SMCRA by applying the permit block sanction of section 510(c) of the Act to violations incurred by persons who own or control the applicant. *Id.* at 696.

Accordingly, the interim final rule being published today modifies the language of former 30 CFR 778.14(c) to restrict its scope to the applicant and operations owned or controlled by the applicant. Since there is nothing in the remainder of the 1989 version of 30 CFR 778.14 (or the subsequent 1994 revisions to that section) that presents a conflict with the court's interpretation of section 510(c) of the Act in *NMA—O&C,* OSM is repromulgating the remainder of this section without substantive change as part of the interim final rule being published today. The rationale for these permit application information requirements is set forth in the preambles to the 1989 rulemaking at 54 FR 8985–90 (March 2, 1989) and the 1994 rulemaking at 59 FR 54347–49 (October 28, 1994).

*I. Section 843.11(g)—Notification Following Issuance of Cessation Order*

On March 2, 1989 (54 FR 8982), OSM amended its regulations by adding 30 CFR 843.11(g), which provides that, within 60 days of issuance of a cessation order in situations in which OSM is the regulatory authority, OSM must notify all owners and controllers identified under 30 CFR 778.13(c) that a cessation order has been issued and that they have been identified as owners or controllers of the violator. As explained in the preamble at 54 FR 8986, one of the purposes of this requirement is to provide notification to individual owners and controllers of a nature sufficient to establish a basis for the assessment of an individual civil penalty under section 518(f) of the Act and 30 CFR part 846 or its State program equivalent.

Since this purpose and the language of the regulation itself do not present a conflict with the court's interpretation of section 510(c) of the Act in *NMA—O&C,* OSM is repromulgating 30 CFR 843.11(g) in substantively identical form as part of the interim final rule being published today. Unlike the previous rule, the new rule does not contain a reference to 30 CFR 778.13(d). While the latter rule is being repromulgated in revised form as 30 CFR 778.13(f) as part of this rulemaking, the revised version no longer includes information requirements pertinent to owners or controllers of the applicant. Therefore, it is no longer relevant to the requirements of 30 CFR 843.11(g). OSM also is replacing the reference to 30 CFR 773.17(i) with a reference to 30 CFR 773.17(h) to reflect the new designation of the paragraph in question.

*J. Section 843.21—Federal Procedures for Improvidently Issued State Permits*

On April 28, 1989 (54 FR 18438), OSM amended its regulations by adding 30 CFR 843.21 to provide a mechanism for Federal enforcement in those situations where the regulatory authority has failed to take appropriate actions under 30 CFR 773.20 with respect to an improvidently issued permit. In *NMA—O&C,* the court struck down this rule and related regulations based on a finding that they ''are centered on the ownership and control rule,'' which the court found to exceed the mandate of SMCRA. *Id.* at 696. In support of its decision, the court pointed to the reference to ownership or control links in 30 CFR 773.20(b)(1)(iii).

Accordingly, the interim final rule being published today replaces the term ''ownership or control link'' (and related language concerning ownership and control links and responsibility for violations, penalties, or fees) in 30 CFR 843.21(d) and (e)(2)(iii) with more specific language that applies the provisions of these rules only to situations in which the permittee or any person owned or controlled by the permittee is responsible for the violation, penalty, or fee.

OSM also is revising 30 CFR 843.21(e)(2) (i) and (ii) to either eliminate the phrase ''the permittee or other person responsible'' or replace it with language that clarifies that the rule applies only to violations, penalties, and fees for which the permittee or persons owned or controlled by the permittee are responsible. OSM is making these changes to ensure that 30 CFR 843.21 is applied in a manner consistent with the revisions to 30 CFR 773.15(b) and the court's decision on the scope of section 510(c) of the Act.

Since there is nothing in the remainder of the 1989 version of 30 FR 843.21 that presents a conflict with the court's interpretation of section 510(c) of the Act in *NMA—O&C,* OSM is repromulgating the remainder of this section without substantive change as part of the interim final rule being published today. The rationale for the procedural requirements and enforcement provisions of 30 CFR 843.21 is set forth in detail in the preamble to the 1989 version of this rule at 54 FR 18454–62 (April 28, 1989). However, the discussions of ownership or control links in that preamble no longer apply in full in view of the court decision and the wording changes in 30 CFR 843.21 (d) and (e). Similarly, the explanation of the meaning of ''other person responsible'' at 54 FR 18447 under the heading ''Inconsistent Terminology'' and at 54 FR 18455 under the heading ''Ownership and Control Relationships Covered'' is no longer fully applicable, especially since the revised version of 30 CFR 843.21 no longer includes this term.

*K. Effect in Federal Program States and on Indian Lands*

Through cross-referencing in the respective regulatory programs, this rule will apply in the following Federal program States: Arizona, California, Georgia, Idaho, Massachusetts, Michigan, North Carolina, Oregon, Rhode island, South Dakota, Tennessee, and Washington. The Federal Programs for these States are codified at 30 CFR parts 903, 905, 910, 912, 921, 922, 933, 937, 939, 941, 942 and 947, respectively. The rule also applies to Indian lands through cross-referencing in 30 CFR part 750.

*L. Effect on State Programs*

None of the rules being promulgated today will require changes in State regulatory programs under the standards set forth in section 503 of SMCRA and 30 CFR part 732, provided States have fully amended their programs to be consistent with the previous versions of these Federal rules. If the Director determines that there are special circumstances in a particular State that result in a need for a State program amendment as a result of this rulemaking, she or he will notify the State in accordance with 30 CFR 732.17.

*M. Comparison of Interim Final Rule Language with Prior Rule Language*

Set forth below is the text of the interim final rule showing all changes in paragraph designation and substantive changes in language from the version of the rules that currently appears in the Code of Federal Regulations. Deleted text is enclosed in brackets ([ ]). Added text appears in italics. Asterisks indicate no change in the existing text.

This comparison is provided solely as a user aid in locating significant changes. It does not identify every minor editorial revision, and it does not include 30 CFR 778.10, the information collection section. It is not a substitute for the actual rule text that follows the preamble.

§ 773.5 Definitions.

No substantive change.

§ 773.15 Review of permit applications.

(a) * * *

(b) *Review of violations.* (1) Based on a review of all reasonably available information concerning violation notices [and ownership or control links] involving *either* the applicant *or any person owned or controlled by the applicant,* including information obtained pursuant to §§ 773.22, 773.23, 778.13, and 778.14 of this chapter, the regulatory authority may not issue the permit if any surface coal mining and reclamation operation owned or controlled by [either] the applicant [or by any person who owns or controls the applicant] is currently in violation of the Act, any Federal rule or regulation promulgated pursuant thereto, a State program, or any Federal or State law, rule, or regulation pertaining to air or water environmental protection. In the absence of a failure-to-abate cessation order, the regulatory authority may presume that a notice of violation issued pursuant to § 843.12 of this chapter or under a Federal or State program is being corrected to the satisfaction of the agency with jurisdiction over the violation where the abatement period for *the* [such] notice of violation has not yet expired and where, as part of the violation information provided pursuant to § 778.14 of this chapter, the applicant has provided certification that *the* [such] violation is in the process of being so corrected. *This* [such] presumption does not apply where evidence to the contrary is set forth in the permit application, or where the notice of violation is issued for nonpayment of abandoned mine land reclamation fees or civil penalties. If a current violation exists, the regulatory authority must require the applicant or *any* person [who owns or controls] *owned or controlled by* the applicant, before the issuance of the permit, to either:

(i) Submit to the regulatory authority proof that the current violation has been or is in the process of being corrected to the satisfaction of the agency that has jurisdiction over the violation; or

(ii) Establish for the regulatory authority that the applicant, or any person owned or controlled by [either] the applicant [or any person who owns or controls the applicant], has filed and is presently pursuing, in good faith, a direct administrative or judicial appeal to contest the validity of the current violation. If the initial judicial review authority under § 775.13 of this chapter affirms the violation, then the applicant must, within 30 days of the judicial action, submit the proof required under paragraph (b)(1)(i) of this section.

(2) Any permit that is issued on the basis of a presumption supported by certification under § 778.14 of this chapter that a violation is in the process of being corrected, on the basis of proof submitted under paragraph (b)(1)(i) of this section that a violation is in the process of being corrected, or pending the outcome of an appeal described in paragraph (b)(1)(ii) of this section, must be issued conditionally.

(3) If the regulatory authority makes a finding that the applicant, [anyone who owns or controls the applicant,] or the operator specified in the application, controls or has controlled surface coal mining and reclamation operations with a demonstrated pattern of willful violations of the Act of such nature and duration, and with resulting irreparable damage to the environment as to indicate an intent not to comply with the Act, no permit may be issued. Before such a finding becomes final, the applicant or operator must be afforded an opportunity for an adjudicatory hearing on the determination as provided for in § 775.11 of this chapter.

(4) No substantive change.

(c) * * *

(d) * * *

(e) *Final compliance review.* After an application is approved, but before the permit is issued, the regulatory authority must reconsider its decision to approve the application, based on the compliance review required by paragraph (b)(1) of this section in light of any new information submitted under sections [778.13(i)] *778.13(k)* and 778.14(d) of this chapter.

§ 773.17 Permit conditions.

* * * * *

(h)[(i)] Within 30 days after a cessation order is issued under § 843.11 of this chapter, or the State program equivalent, for operations conducted under the permit, except where a stay of the cessation order is granted and remains in effect, the permittee must either submit to the regulatory the following information, current to the date the cessation order was issued, or notify the regulatory authority in writing that there has been no charge since the immediately preceding submittal of such information:

(1) Any new information needed to correct or update the information previously submitted to the regulatory authority by the permittee under § 778.13(c) of this chapter; or

(2) If not previously submitted, the information required from a permit applicant by § 778.13(c) of this chapter.

§ 773.20 Improvidently issued permits: General procedures.

(a) *Permit review.* A regulatory authority which has reason to believe that it improvidently issued a surface coal mining and reclamation permit must review the circumstances under which the permit was issued, using the criteria in paragraph (b) of this section. When the regulatory authority finds that the permit was improvidently issued, it must comply with paragraph (c) of this section.

(b) *Review criteria.* (1) A regulatory authority must find that a surface coal mining and reclamation permit was improvidently issued if:

(i) Under the violations review criteria of the regulatory program at the time the permit was issued:

(A) The regulatory authority should not have issued the permit because of an unabated violation or a delinquent penalty or fee; or

(B) The permit was issued on the presumption that a notice of violation was in the process of being corrected to the satisfaction of the agency with jurisdiction over the violation, but a cessation order subsequently was issued; and

(ii) The violation, penalty, or fee:

(A) Remains unabated or delinquent; and

(B) Is not the subject of a good faith appeal, or of an abatement plan or payment schedule *that is being met* [with which the permittee or other person responsible is complying] to the satisfaction of the responsible agency; and

(iii) [Where the] *The* permittee *or any person owned or controlled by the permittee* [was linked to the violation, penalty, or fee through ownership or control under the violations review criteria of the regulatory program at the time the permit was issued, an ownership or control link between the permittee and the person responsible for the violation, penalty, or fee still exists, or where the link has been severed, the permittee] continues to be responsible for the violation, penalty, or fee.

(2) The provisions of § 773.25 of this part *apply whenever* [shall be applicable when] a regulatory authority [determines] *makes one of the following determinations*:

(i) Whether a violation, penalty, or fee existed at the time that it was cited, remains unabated or delinquent, has been corrected, is in the process of being corrected, or is the subject of a good faith appeal, and

(iii) Whether [any ownership or control link between] the permittee *or any person owned or controlled by the permittee continues to be* [and the person] responsible for the violation, penalty, or fee [existed, still exists, or has been severed].

(c) *Remedial measures.* (1) A regulatory authority which, under paragraph (b) of this section, finds that, because of an unabated violation or a delinquent penalty or fee, a permit was improvidently issued must use one or more of the following remedial measures:

(i) Implement, with the cooperation of the *responsible agency, the* permittee, *and persons owned or controlled by the permittee* [or other person responsible, and of the responsible agency], a plan for abatement of the violation or a schedule for payment of the penalty or fee;

(ii) Impose on the permit a condition requiring *abatement of the violation or payment of the penalty or fee within* [that in] a reasonable time [the permittee or other

person responsible abate the violation or pay the penalty or fee];

(iii) Suspend the permit until the violation is abated or the penalty or fee is paid; or

(iv) Rescind the permit.

(2) If the regulatory authority decides to suspend the permit, it must afford at least 30 days written notice to the permittee. If the regulatory authority decides to rescind the permit, it must issue a notice in accordance with § 773.21 of this part. In either case, the permittee must be given the opportunity to request administrative review of the notice under 43 CFR 4.1370 through 4.1377, where OSM is the regulatory authority, or under the State program equivalent, where a State is the regulatory authority. The regulatory authority's decision will remain in effect during the pendency of the appeal, unless temporary relief is granted in accordance with 43 CFR 4.1376 or the State program equivalent.

§ 773.21 Improvidently issued permits: Rescission procedures.

A regulatory authority which, under § 773.20(c)(1)(iv) of this part, elects to rescind an improvidently issued permit must serve on the permittee a notice of proposed suspension and rescission which includes the reasons for the finding of the regulatory authority under § 773.20(b) of this part and states that:

(a) *Automatic suspension and rescission.* After a specified period of time not to exceed 90 days, the permit automatically will become suspended, and not to exceed 90 days thereafter rescinded, unless within those periods the permittee submits proof, and the regulatory authority finds, consistent with the provisions of § 773.25 of this part, that:

(1) The finding of the regulatory authority under § 773.20(b) of this part was erroneous;

(2) The [permittee or other person responsible has abated the] violation *has been abated,* [on which the finding was based,] or [paid] the penalty or fee *paid,* to the satisfaction of the responsible agency;

(3) The violation, penalty, or fee is the subject of a good faith appeal, or of an abatement plan or payment schedule *that is being met* [with which the permittee or other person responsible is complying] to the satisfaction of the responsible agency; or

(4) [Since the finding was made, the] *The* permittee *and all persons owned or controlled by the permittee* [has severed any ownership or control link with the person responsible for, and does not continue to be] *are no longer* responsible for the violation, penalty, or fee.

(b) *Cessation of operations.* After permit suspension or rescission, the permittee must cease all surface coal mining and reclamation operations under the permit, except for violation abatement and for reclamation and other environmental protection measures as required by the regulatory authority.

§ 778.13 Identification of interests.

An application must contain the following information, except that the submission of a social security number is voluntary;

(a) A statement as to whether the applicant is a corporation, partnership, single proprietorship, association, or other business entity.

(b) The name, address, telephone number, and, as applicable, social security number and employer identification number of the:

(1) Applicant;

(2) Applicant's resident agent; and

(3) Person who will pay the abandoned mine land reclamation fee.

(c) For each person who owns or controls the applicant under the definition of ''owned or controlled' and 'owns or controls'" in § 773.5 of this chapter, as applicable:

(1) The person's name, address, social security number, and employer identification number;

(2) The person's ownership or control relationship to the applicant, including percentage of ownership and location in *the* organizational structure; *and*

(3) The title of the person's position, [and] *the* date *that the person assumed the* position, [was assumed,] and, when submitted under section [773.17(i)] *773.17(h)* of this chapter, *the* date of departure from the position.

[(4)] *(d) For the applicant and each partner or principal shareholder of the applicant,* each [additional] name and identifying number, including employer identification number, Federal or State permit number, and MSHA number with date of issuance, under which the person owns or controls, or previously owned or controlled, a surface coal mining and reclamation operation in the United States within the 5 years preceding the date of the application.[; and]

[(5)] *(e)* The application number or other identifier of, and the regulatory authority for, any other pending surface coal mining operation permit application filed by the [person] *applicant* in any State in the United States.

[(d)]*(f)* For any surface coal mining operation owned or controlled by [either] the applicant [or by any person who owns or controls the applicant] under the definition of ''owned or controlled'' and ''owns or controls'' in § 773.5 of this chapter, the operation's:

(1) Name, address, identifying numbers, including employer identification number, Federal or State permit number and MSHA number, the date of issuance of the MSHA number, and the regulatory authority; and

(2) Ownership or control relationship to the applicant, including percentage of ownership and location in organizational structure.

[(e)]*(g)* The name and address of each legal or equitable owner of record of the surface and mineral property to be mined, each holder of record of any leasehold interest in the property to be mined, and any purchaser of record under a real estate contract for the property to be mined.

[(f)]*(h)* The name and address of each owner of record of all property (surface and subsurface) contiguous to any part of the proposed permit area.

[(g)]*(i)* The Mine Safety and Health Administration (MSHA) numbers for all mine-associated structures that require MSHA approval.

[(h)]*(j)* A statement of all lands, interest in lands, options, or pending bids on interests held or made by the applicant for lands contiguous to the area described in the permit application. If requested by the applicant, any information required by this paragraph which is not on public file pursuant to State law must be held in confidence by the regulatory authority, as provided under § 773.13(d)(3)(ii) of this chapter.

[(i)]*(k)* After an applicant is notified that his or her application is approved, but before the permit is issued, the applicant must, as applicable, update, correct or indicate that no change has occurred in the information previously submitted under paragraphs (a) through [(d)]*(f)* of this section.

[(j)]*(l)* The applicant must submit the information required by this section and by § 778.14 of this part in any format that OSM prescribes.

§ 778.14 Violation information.

Each application must contain the following information:

(a) A statement of whether the applicant or any subsidiary, affiliate, or persons controlled by or under common control with the applicant has:

(1) Had a Federal or State coal mining permit suspended or revoked in the 5 years preceding the date of submission of the application; or

(2) Forfeited a performance bond or similar security deposited in lieu of bond.

(b) A brief explanation of the facts involved if any such suspension, revocation, or forfeiture referred to in paragraphs (a)(1) and (a)(2) of this section has occurred, including:

(1) Identification number and date of issuance of the permit, and the date and amount of bond or similar security;

(2) Identification of the authority that suspended or revoked the permit or forfeited the bond and the stated reasons for the action;

(3) The current status of the permit, bond, or similar security involved;

(4) The date, location, and type of any administrative or judicial proceedings initiated concerning the suspension, revocation, or forfeiture; and

(5) The current status of the proceedings.

(c) A list of all violation notices received by the applicant during the three-year period preceding the application date, and a list of all outstanding violation notices received prior to the date of the application by any surface coal mining operation that is deemed or presumed to be owned or controlled by [either] the applicant [or any person who is deemed or presumed to own or control the applicant] under the definition of ''owned or controlled'' and ''owns or controls'' in § 773.5 of this chapter. For each notice of violation issued pursuant to § 843.12 of this chapter or under a Federal or State program for which the abatement period has not expired, the applicant must certify that such notice of violation is in the process of being corrected to the satisfaction of the agency with jurisdiction over the violation. For each violation notice reported, the list must include the following information, as applicable:

(1) Any identifying numbers for the operation, including the Federal or State permit number and MSHA number, the dates of issuance of the violation notice and MSHA

number, the name of the person to whom the violation notice was issued, and the name of the issuing regulatory authority, department or agency;

(2) A brief description of the violation alleged in the notice;

(3) The date, location, and type of any administrative or judicial proceedings initiated concerning the violation, including, but not limited to, proceedings initiated by any person identified in paragraph (c) of this section to obtain administrative or judicial review of the violation;

(4) The current status of the proceedings and of the violation notice; and

(5) The actions, if any, taken by any person identified in paragraph (c) of this section to abate the violation.

(d) After an applicant is notified that his or her application is approved, but before the permit is issued, the applicant must, as applicable, update, correct or indicate that no change has occurred in the information previously submitted under this section.

§ 843.11 Cessation orders.

* * * * *

(g) Where OSM is the regulatory authority, within 60 days after issuing a cessation order, OSM will notify in writing any person who has been identified under sections [773.17(i)] *773.17(h)* and 778.13(c) (d)] of this chapter as owning or controlling the permittee, that the cessation order was issued and that the person has been identified as an owner or controller.

§ 843.21 Procedures for improvidently issued State permits.

(a) *Initial notice.* If OSM has reason to believe that a State surface coal mining and reclamation permit meets the criteria for an improvidently issued permit in § 773.20(b) of this chapter, or the State program equivalent, and the State has failed to take appropriate action on the permit under State program equivalents of §§ 773.20 and 773.21 of this chapter, OSM will issue to the State, and should provide to the permittee, an initial notice stating in writing the reasons for that belief.

(b) *State response.* Within 30 days of the date on which an initial notice is issued under paragraph (a) of this section, the State must demonstrate to OSM in writing either that:

(1) The permit does not meet the criteria of § 773.20(b) of this chapter, or the State program equivalent; or

(2) The State is in compliance with the State program equivalents of §§ 773.20 and 773.21 of this chapter.

(c) *Ten-day notice.* If OSM finds that the State has failed to make the demonstration required by paragraph (b) of this section, OSM will issue to the State a ten-day notice stating in writing the reasons for that finding and requesting that within 10 days the State take appropriate action under the State program equivalents of §§ 773.20 and 773.21 of this chapter;

(d) *Federal enforcement.* After 10 days from the date on which a ten-day notice is issued under paragraph (c) of this section, if OSM finds that the State has failed to take appropriate action under the State program equivalents of §§ 773.20 and 773.21 of this chapter, or to show good cause for such failure, OSM will take appropriate remedial action. Such remedial action may include the issuance to the permittee of a notice of violation requiring that by a specified date all mining operations must cease and reclamation of all areas for which a reclamation obligation exists must commence or continue unless, to the satisfaction of the responsible agency, any violation, penalty, or fee on which the notice of violation was based is abated or paid, an abatement plan or payment schedule is entered into, or [any ownership or control link with the person responsible for the violation, penalty or fee is severed and] the permittee *and all persons owned or controlled by the permittee are no longer* [does not continue to be] responsible for the violation, penalty, or fee. Under this paragraph, good cause does not include the lack of State program equivalents of §§ 773.20 and 773.21 of this chapter.

(e) *Remedies to notice of violation.* Upon receipt from any person of information concerning the issuance of a notice of violation under paragraph (d) of this section, OSM will review the information and:

(1) Vacate the notice of violation if it resulted from an erroneous conclusion under this section; or

(2) Terminate the notice of violation if:

(i) [The permittee or other person responsible has, to the satisfaction of the responsible agency, abated any violation or paid any penalty or fee on which the notice of violation was based] *All violations have been abated and all penalties or fees have been paid;*

(ii) The permittee or *any* [other] person [responsible] *owned or controlled by the permittee* has filed and is pursuing a good faith appeal of the violation, penalty, or fee, or has entered into and is complying with an abatement plan or payment schedule to the satisfaction of the responsible agency; or

(iii) [Since the notice of violation was issued, the] *The* permittee [has severed any ownership or control link with the person responsible for, and does not continue to be] *and all persons owned or controlled by the permittee are no longer* responsible for the violation, penalty, or fee.

(f) *No civil penalty.* OSM will not assess a civil penalty for a notice of violation issued under this section.

## IV. Procedural Matters

### *A. Executive Order 12866*

This rule has been reviewed under the criteria of Executive Order 12866.

### *B. Regulatory Flexibility Act*

The Department of the Interior certifies that this rule will not have a significant economic impact on a substantial number of small entities under the Regulatory Flexibility Act (5 U.S.C. 601 *et seq.*). The rule will not add to the cost of operating a mine under an approved regulatory program. Its provisions apply mainly to operators who previously operated mines in violation of the provisions of SMCRA and then failed to abate the violation or pay monetary civil penalties that were assessed. Further, most coal mining operations subject to these regulations do not engage in prohibited activities and practices, and, as a result, the aggregate economic impact of these revised regulations will be minimal, affecting only those who engage in prohibited behavior in violation of SMCRA.

### *C. Executive Order 12988 on Civil Justice Reform*

The Department of the Interior has determined that this rule meets the requirements of sections 3(a) and 3(b)(2) of Executive Order 12988, ''Civil Justice Reform'' (56 FR 55195).

### *D. Unfunded Mandates Reform Act*

This rule will not impose a cost of $100 million or more in any given year on any governmental entity or the private sector.

### *E. Federal Paperwork Reduction Act*

The Department of the Interior has determined that this rule does not contain collections of information which require approval by the Office of Management and Budget under 44 U.S.C. 3501 *et seq.* OMB has previously approved the collection activities and assigned clearance numbers 1029–0034–1029–0041 to 30 CFR parts 778 and 773, respectively.

### *F. National Environmental Policy Act*

OSM has determined that this rulemaking action is categorically excluded from the requirement to prepare an environmental document under the National Environmental Policy Act of 1969, as amended, 42 U.S.C. 4332 *et seq.* This determination was made in accordance with the Departmental Manual (516 DM 2, Appendix 1.10).

*Authors:* The principal authors of this rule are Nancy Broderick and Dennis Rice, Office of Surface Mining Reclamation and Enforcement, U.S. Department of the Interior, 1951 Constitution Ave., NW., Washington, DC 20240. Telephone: (202) 2028–2700 and 2829. E-mail address: nbroderi@osmre.gov and drice@osmre.gov.

## List of Subjects

### *30 CFR Part 773*

Administrative practice and procedure, Reporting and recordkeeping requirements, Surface mining, Underground mining.

*30 CFR Part 778*

Reporting and recordkeeping requirements, Surface mining, Underground mining.

*30 CFR Part 843*

Federal enforcement.

Dated: April 11, 1997.

**Bob Armstrong,**

*Assistant Secretary, Land and Minerals Management.*

For the reasons set forth in the preamble, the Department is amending 30 CFR parts 773, 778, and 843 as set forth below:

## PART 773—REQUIREMENTS FOR PERMITS AND PERMIT PROCESSING

1. The authority citation for part 773 is revised to read as follows:

**Authority:** 30 U.S.C. 1201 *et seq.*, as amended; 16 U.S.C. 1531 *et seq.*; 16 U.S.C. 661 *et seq.*; 16 U.S.C. 703 *et seq.*; 16 U.S.C. 668a; 16 U.S.C. 469 *et seq.*; 16 U.S.C. 470aa *et seq.*; and Pub. L. 100–34.

2. In § 773.5, the definition of ''‘Owned or controlled’ and ‘owns or controls’'' is revised to read as follows:

### § 773.5 Definitions.

* * * * *

*Owned or controlled* and *owns or controls* mean any one or a combination of the relationships specified in paragraphs (a) and (b) of this definition:

(a)(1) Being a permittee of a surface coal mining operation;

(2) Based on instrument of ownership or voting securities, owning of record in excess of 50 percent of an entity; or

(3) Having any other relationship which gives one person authority directly or indirectly to determine the manner in which an applicant, an operator, or other entity conducts surface coal mining operations.

(b) The following relationships are presumed to constitute ownership or control unless a person can demonstrate that the person subject to the presumption does not in fact have the authority directly or indirectly to determine the manner in which the relevant surface coal mining operation is conducted:

(1) Being an officer or director of an entity;

(2) Being the operator of a surface coal mining operation;

(3) Having the ability to commit the financial or real property assets or working resources of an entity;

(4) Being a general partner in a partnership;

(5) Based on the instruments of ownership or the voting securities of a corporate entity, owning of record 10 through 50 percent of the entity; or

(6) Owning or controlling coal to be mined by another person under a lease, sublease or other contract and having the right to receive such coal after mining or having authority to determine the manner in which that person or another person conducts a surface coal mining operation.

* * * * *

3. In § 773.15, paragraphs (b) and (e) are revised to read as follows:

### § 773.15 Review of permit applications.

* * * * *

(b) *Review of violations.* (1) Based on a review of all reasonably available information concerning violation notices involving either the applicant or any person owned or controlled by the applicant, including information obtained pursuant to §§ 773.22, 773.23, 778.13, and 778.14 of this chapter, the regulatory authority may not issue the permit if any surface coal mining and reclamation operation owned or controlled by the applicant is currently in violation of the Act, any Federal rule or regulation promulgated pursuant thereto, a State program, or any Federal or State law, rule, or regulation pertaining to air or water environmental protection. In the absence of a failure-to-abate cessation order, the regulatory authority may presume that a notice of violation issued pursuant to § 843.12 of this chapter or under a Federal or State program is being corrected to the satisfaction of the agency with jurisdiction over the violation where the abatement period for the notice of violation has not yet expired and where, as part of the violation information provided pursuant to § 778.14 of this chapter, the applicant has provided certification that the violation is in the process of being so corrected. This presumption does not apply where evidence to the contrary is set forth in the permit application, or where the notice of violation is issued for nonpayment of abandoned mine land reclamation fees or civil penalties. If a current violation exists, the regulatory authority must require the applicant or any person owned or controlled by the applicant, before the issuance of the permit, to either:

(i) Submit to the regulatory proof that the current violation has been or is in the process of being corrected to the satisfaction of the agency that has jurisdiction over the violation; or

(ii) Establish for the regulatory authority that the applicant, or any person owned or controlled by the applicant, has filed and is presently pursuing, in good faith, a direct administrative or judicial appeal to contest the validity of the current violation. If the initial judicial review authority under § 775.13 of this chapter affirms the violation, then the applicant must, within 30 days of the judicial action, submit the proof required under paragraph (b)(1)(i) of this section.

(2) Any permit that is issued on the basis of a presumption supported by certification under § 778.14 of this chapter that a violation is in the process of being corrected, on the basis of proof submitted under paragraph (b)(1)(i) of this section that a violation is in the process of being corrected, or pending the outcome of an appeal described in paragraph (b)(1)(ii) of this section, must be issued conditionally.

(3) If the regulatory authority makes a finding that the applicant, or the operator specified in the application, controls or has controlled surface coal mining and reclamation operations with a demonstrated pattern of willful violations of the Act of such nature and duration, and with resulting irreparable damage to the environment as to indicate an intent not to comply with the Act, no permit may be issued. Before such a finding becomes final, the applicant or operator must be afforded an opportunity for an adjudicatory hearing on the determination as provided for in § 775.11 of this chapter.

(4)(i) Subsequent to October 24, 1992, the prohibitions of paragraph (b) of this section regarding the issuance of a new permit do not apply to any violation that:

(A) Occurs after that date;

(B) Is unabated; and

(C) Results from an unanticipated event or condition that arises from a surface coal mining and reclamation operation on lands that are eligible for remining under a permit:

(*1*) Issued before September 30, 1994, or any renewals thereof; and

(*2*) Held by the person making application for the new permit.

(ii) For permits issued under § 785.25 of this chapter, an event or condition will be presumed to be unanticipated for the purposes of this paragraph if it:

(A) Arose after permit issuance;

(B) Was related to prior mining; and

(C) Was not identified in the permit.

* * * * *

(e) *Final compliance review.* After an application is approved, but before the permit is issued, the regulatory authority must reconsider its decision to approve the application, based on the compliance review required by paragraph (b)(1) of this section in light of any new information submitted under §§ 778.13(k) and 778.14(d) of this chapter.

4. In § 773.17, paragraph (i) is redesignated as paragraph (h), which is revised to read as follows:

**§ 773.17 Permit conditions.**

* * * * *

(h) Within 30 days after a cessation order is issued under § 843.11 of this chapter, or the State program equivalent, for operations conducted under the permit, except where a stay of the cessation order is granted and remains in effect, the permittee must either submit to the regulatory authority the following information, current to the date the cessation order was issued, or notify the regulatory authority in writing that there has been no change since the immediately preceding submittal of such information:

(1) Any new information needed to correct or update the information previously submitted to the regulatory authority by the permittee under § 778.13(c) of this chapter; or

(2) If not previously submitted, the information required from a permit application by § 778.13(c) of this chapter.

5. § 773.20 is revised to read as follows:

**§ 773.20 Improvidently issued permits: General procedures.**

(a) *Permit review.* A regulatory authority which has reason to believe that it improvidently issued a surface coal mining and reclamaiton permit must review the circumstances under which the permit was issued, using the criteria in paragraph (b) of this section. When the regulatory authority finds that the permit was improvidently issued, it must comply with paragraph (c) of this section.

(b) *Review criteria.* (1) A regulatory authority must find that a surface coal mining and reclamation permit was improvidently issued if:

(i) Under the violations review criteria of the regulatory program at the time the permit was issued:

(A) The regulatory authority should not have issued the permit because of an unabated violation or a delinquent penalty or fee; or

(B) The permit was issued on the presumption that a notice of violation was in the process of being corrected to the satisfaction of the agency with jurisdiction over the violation, but a cessation order subsequently was issued; and

(ii) The violation, penalty, or fee:

(A) Remains unabated or delinquent; and

(B) Is not the subject of a good faith appeal, or of an abatement plan or payment schedule that is being met to the satisfaction of the responsible agency; and

(iii) The permittee or any person owned or controlled by the permittee continues to be responsible for the violation, penalty, or fee.

(2) The provisions § 773.25 of this part apply whenever a regulatory authority makes one of the following determinations:

(i) Whether a violation, penalty, or fee existed at the time that it was cited, remains unabated or delinquent, has been corrected, is in the process of being corrected, or is the subject of a good faith appeal, and

(ii) Whether the permittee or any person owned or controlled by the permittee continues to be responsible for the violation, penalty, or fee.

(c) *Remedial measures.* (1) A regulatory authority which, under paragraph (b) of this section, finds that, because of an unabated violation or a delinquent penalty or fee, a permit was improvidently issued must use one or more of the following remedial measures:

(i) Implement, with the cooperation of the responsible agency, the permittee, and persons owned or controlled by the permittee, a plan for abatement of the violation or a schedule for payment of the penalty or fee;

(ii) Impose on the permit a condition requiring abatement of the violation or payment of the penalty or fee within a reasonable time;

(iii) Suspend the permit until the violation is abated or the penalty or fee is paid; or

(iv) Rescind the permit.

(2) If the regulatory authority decides to suspend the permit, it must afford at least 30 days written notice to the permittee. If the regulatory authority decides to rescind the permit, it must issued a notice in accordance with § 773.21 of this part. In either case, the permittee must be given the opportunity to request administrative review of the notice under 43 CFR 4.1370 through 4.1370 through 4.1377, where OSM is the regulatory authority, or under the State program equivalent, where a State is the regulatory authority. The regulatory authority's decision will remain in effect during the pendency of the appeal, unless temporary relief is granted in accordance with 43 CFR 4.1376 or the State program equivalent.

6. § 773.21 is revised to read as follows:

**§ 773.21 Improvidently issued permits: Rescission procedures.**

A regulatory authority which, under § 773.20(c)(1)(iv) of this part, elects to rescind an improvidently issued permit must serve on the permittee a notice of proposed suspension and rescission which includes the reasons for the finding of the regulatory authority under § 773.20(b) of this part and states that:

(a) *Automatic suspension and rescission.* After a specified period of time not to exceed 90 days, the permit automatically will become suspended, and not to exceed 90 days thereafter rescinded, unless within those periods the permittee submits proof, and the regulatory authority finds, consistent with the provisions of § 773.25 of this part, that:

(1) The finding of the regulatory authority under § 773.20(b) of this part was erroneous;

(2) The violation has been abated, or the penalty or fee paid, to the satisfaction of the responsible agency;

(3) The violation, penalty, or fee is the subject of a good faith appeal, or of an abatement plan or payment schedule that is being met to the satisfaction of the responsible agency; or

(4) The permittee and all persons owned or controlled by the permittee are no longer responsible for the violation, penalty, or fee.

(b) *Cessation of operations.* After permit suspension or rescission, the permittee must cease all surface coal mining and reclamation operations under the permit, except for violation abatement and for reclamation and other environmental protection measures as required by the regulatory authority.

## PART 778—PERMIT APPLICATIONS—MINIMUM REQUIREMENTS FOR LEGAL, FINANCIAL, COMPLIANCE, AND RELATED INFORMATION

7. The authority citation for Part 778 is revised to read as follows:

**Authority:** 30 U.S.C. 1201 *et seq.*, as amended and Pub. L. 100–34.

8. § 778.10 is revised to read as follows:

**§ 778.10 Information collection.**

(a) In accordance with 44 U.S.C. 3501 *et seq.*, the Office of Management and Budget (OMB) has approved the information collection requirements of this part. Section 507(b) of SMCRA provides that persons applying for a permit to conduct surface coal mining operations must submit to the regulatory authority certain information regarding the applicant and affiliated entities, their compliance status and history, property ownership and other property rights, right of entry, liability insurance, the status of unsuitability claims, and proof of publication of a newspaper notice. The regulatory authority uses this information to insure that all legal,

financial and compliance requirements are satisfied prior to issuance of a permit. Persons seeking to conduct surface coal mining operations must respond to obtain a benefit. A Federal agency may not conduct or sponsor, and a person is not required to respond to, a collection of information unless it displays a currently valid OMB control number. The OMB clearance number for this part is 1029–0034.

(b) OSM estimates that the public reporting and recordkeeping burden for this part averages 48 hours per response, including time spent reviewing instructions, searching existing data sources, gathering and maintaining the data needed, and completing and reviewing the collection of information. Send comments regarding this burden estimate or any other aspect of these information collection and recordkeeping requirements, including suggestions for reducing the burden, to the Office of Surface Mining Reclamation and Enforcement, Information Collection Clearance Officer, 1951 Constitution Avenue, NW., Washington, DC 20240; and the Office of Management and Budget, Office of Information and Regulatory Affairs, Attention: Interior Desk Officer, 725 17th Street, NW, Washington, DC 20503. Please refer to OMB Control Number 1029–0034 in any correspondence.

9. § 778.13 is revised to read as follows:

**§ 778.13 Identification of interests.**

An application must contain the following information, except that the submission of a social security number is voluntary:

(a) A statement as to whether the applicant is a corporation, partnership, single proprietorship, association, or other business entity.

(b) The name, address, telephone number, and, as applicable, social security number and employer identification number of the:

(1) Applicant;

(2) Applicant's resident agent; and

(3) Person who will pay the abandoned mine land reclamation fee.

(c) For each person who owns or controls the applicant under the definition of ''owned or controlled' and 'owns or controls'' in § 773.5 of this chapter, as applicable:

(1) The person's name, address, social security number, and employer identification number;

(2) The person's ownership or control relationship to the applicant, including percentage of ownership and location in the organizational structure; and

(3) The title of the person's position, the date that the person assumed the position, and, when submitted under § 773.17(h) of this chapter, the date of departure from the position.

(d) For the applicant and each partner or principal shareholder of the applicant, each name and identifying number, including employer identification number, Federal or State permit number, and MSHA number with date of issuance, under which the person owns or controls, or previously owned or controlled, a surface coal mining and reclamation operation in the United States within the 5 years preceding the date of the application.

(e) The application number or other identifier of, and the regulatory authority for, any other pending surface coal mining operation permit application filed by the applicant in any State in the United States.

(f) For any surface coal mining operation owned or controlled by the applicant under the definition of ''owned or controlled'' and ''owns or controls'' in § 773.5 of this chapter, the operation's:

(1) Name, address, identifying numbers, including employer identification number, Federal or State permit number and MSHA number, the date of issuance of the MSHA number, and the regulatory authority; and

(2) Ownership or control relationship to the applicant, including percentage of ownership and location in organizational structure.

(g) The name and address of each legal or equitable owner of record of the surface and mineral property to be mined, each holder of record of any leasehold interest in the property to be mined, and any purchaser of record under a real estate contract for the property to be mined.

(h) The name and address of each owner of record of all property (surface and subsurface) contiguous to any part of the proposed permit area.

(i) The Mine Safety and Health Administration (MSHA) numbers for all mine-associated structures that require MSHA approval.

(j) A statement of all lands, interest in lands, options, or pending bids on interests held or made by the applicant for lands contiguous to the area described in the permit application. If requested by the applicant, any information required by this paragraph which is not on public file pursuant to State law must be held in confidence by the regulatory authority, as provided under § 773.13(d)(3)(ii) of this chapter.

(k) After an applicant is notified that his or her application is approved, but before the permit is issued, the applicant must, as applicable, update, correct or indicate that no change has occurred in the information previously submitted under paragraphs (a) through (f) of this section.

(l) The applicant must submit the information required by this section and by § 778.14 of this part in any format that OSM prescribes.

10. § 778.14 is revised to read as follows:

**§ 778.14 Violation information**

Each application must contain the following information:

(a) A statement of whether the applicant or any subsidiary, affiliate, or persons controlled by or under common control with the applicant has:

(1) Had a Federal or State coal mining permit suspended or revoked in the 5 years preceding the date of submission of the application; or

(2) Forfeited a performance bond or similar security deposited in lieu of bond.

(b) A brief explanation of the facts involved in any such suspension, revocation, or forfeiture referred to in paragraphs (a)(1) and (a)(2) of this section has occurred, including:

(1) Identification number and date of issuance of the permit, and the date and amount of bond or similar security;

(2) Identification of the authority that suspended or revoked the permit or forfeited the bond and the stated reasons for the action;

(3) The current status of the permit, bond, or similar security involved;

(4) The date, location, and type of any administrative or judicial proceedings initiated concerning the suspension, revocation, or forfeiture; and

(5) The current status of the proceedings.

(c) A list of all violation notices received by the applicant during the three-year period preceding the application date, and a list of all outstanding violation notices received prior to the date of the application by any surface coal mining operation that is deemed or presumed to be owned or controlled by the applicant under the definition of ''owned or controlled'' and ''owns or controls'' in § 773.5 of this chapter. For each notice of violation issued pursuant to § 843.12 of this chapter or under a Federal or State program for which the abatement period has not expired, the applicant must certify that such notice of violation is in the process of being corrected to the satisfaction of the agency with jurisdiction over the violation. For each violation notice reported, the list must include the following information, as applicable:

(1) Any identifying numbers for the operation, including the Federal or State

permit number and MSHA number, the dates of issuance of the violation notice and MSHA number, the name of the person to whom the violation notice was issued, and the name of the issuing regulatory authority, department or agency;

(2) A brief description of the violation alleged in the notice;

(3) The date, location, and type of any administrative or judicial proceedings initiated concerning the violation, including, but not limited to, proceedings initiated by any person identified in paragraph (c) of this section to obtain administrative or judicial review of the violation;

(4) The current status of the proceedings and of the violation notice; and

(5) The actions, if any, taken by any person identified in paragraph (c) of this section to abate the violation.

(d) After an applicant is notified that his or her application is approved, but before the permit is issued, the applicant must, as applicable, update, correct or indicate that no change has occurred in the information previously submitted under this section.

## PART 843—FEDERAL ENFORCEMENT

11. The authority citation for part 843 is revised to read as follows:

**Authority:** 30 U.S.C. 1201 *et seq.*, as amended and Pub. L. 100–34.

12. In § 843.11, paragraph (g) is revised to read as follows:

### § 843.11 Cessation orders.

* * * * *

(g) Where OSM is the regulatory authority, within 60 days after issuing a cessation order, OSM will notify in writing any person who has been identified under §§ 773.17(h) and 778.13(c) of this chapter as owning or controlling the permittee that the cessation order was issued and that the person has been identified as an owner or controller.

13. § 843.21 is revised to read as follows:

### § 843.21 Procedures for improvidently issued State permits.

(a) *Initial notice.* If OSM has reason to believe that a State surface coal mining and reclamation permit meets the criteria for an improvidently issued permit in § 773.20(b) of this chapter, or the State program equivalent, and the State has failed to take appropriate action on the permit under State program equivalents of §§ 773.20 and 773.21 of this chapter, OSM will issue to the State, and should provide to the permittee, an initial notice stating in writing the reasons for that belief.

(b) *State response.* Within 30 days of the date on which an initial notice is issued under paragraph (a) of this section, the State must demonstrate to OSM in writing either that:

(1) The permit does not meet the criteria of § 773.20(b) of this chapter, or the State program equivalent; or

(2) The State is in compliance with the State program equivalents of §§ 773.20 and 773.21 of this chapter.

(c) *Ten-day notice.* If OSM finds that the State has failed to make the demonstration required by paragraph (b) of this section, OSM will issue to the State a ten-day notice stating in writing the reasons for that finding and requesting that within 10 days the State take appropriate action under the State program equivalents of §§ 773.20 and 773.21 of this chapter.

(d) *Federal enforcement.* After 10 days from the date on which a ten-day notice is issued under paragraph (c) of this section, if OSM finds that the State has failed to take appropriate action under the State program equivalents of §§ 773.20 and 773.21 of this chapter, or to show good cause for such failure, OSM will take appropriate remedial action. Such remedial action may include the issuance to the permittee of a notice of violation requiring that by a specified date all mining operations must cease and reclamation of all areas for which a reclamation obligation exists must commence or continue unless, to the satisfaction of the responsible agency, any violation, penalty, or fee on which the notice of violation was based is abated or paid, an abatement plan or payment schedule is entered into, or the permittee and all persons owned or controlled by the permittee are no longer responsible for the violation, penalty, or fee. Under this paragraph, good cause does not include the lack of State program equivalents of §§ 773.20 and 773.21 of this chapter.

(e) *Remedies to notice of violation.* Upon receipt from any person of information concerning the issuance of a notice of violation under paragraph (d) of this section, OSM will review the information and:

(1) Vacate the notice of violation if it resulted from an erroneous conclusion under this section; or

(2) Terminate the notice of violation if:

(i) All violations have been abated and all penalties or fees have been paid;

(ii) The permittee or any person owned or controlled by the permittee has filed and is pursuing a good faith appeal of the violation, penalty, or fee, or has entered into and is complying with an abatement plan or payment schedule to the satisfaction of the responsible agency; or

(iii) The permittee and all persons owned or controlled by the permittee are no longer responsible for the violation, penalty, or fee.

(f) *No civil penalty.* OSM will not assess a civil penalty for a notice of violation issued under this section.

[FR Doc. 97–10247 Filed 4–21–97; 8:45 am]

BILLING CODE 4310–05–M

federal register

Monday
April 21, 1997

# Part VII

## Department of the Defense
## General Services Administration
## National Aeronautics and Space Administration

**48 CFR Part 4 et al.**

**Federal Acquisition Regulation; Subcontract Consent; Notice and Proposed Rule**

## DEPARTMENT OF DEFENSE

## GENERAL SERVICES ADMINISTRATION

## NATIONAL AERONAUTICS AND SPACE ADMINISTRATION

**[FAR Case 95–011]**

## Submission for OMB Review Entitled Subcontract Consent

**AGENCIES:** Department of Defense (DOD), General Services Administration (GSA), and National Aeronautics and Space Administration (NASA).

**ACTION:** Notice of request for public comments regarding a new collection requirement.

**SUMMARY:** Under the provisions of the Paperwork Reduction Act of 1995 (44 U.S.C. Chapter 35), the Federal Acquisition Regulation (FAR) Secretariat plans to submit to the Office of Management and Budget (OMB) a request to review and approve a new information collection requirement concerning Subcontract Consent (FAR Case 95–011).

**DATES:** *Comment Due Date:* June 20, 1997.

**ADDRESSES:** Comments regarding this burden estimate or any other aspect of this collection of information, including suggestions for reducing this burden, should be submitted to: FAR Desk Officer, OMB, Room 10102, NEOB, Washington, DC 20503, and a copy to the General Services Administration, FAR Secretariat, 1800 F Street, NW., Room 4037, Washington, DC 20405. Please cite FAR case 95–011, Subcontract Consent, in all correspondence.

**FOR FURTHER INFORMATION CONTACT:** Ms. Linda Klein, Office of Federal Acquisition Policy, GSA (202) 501–3775.

**SUPPLEMENTARY INFORMATION:**

### A. Purpose

The objective of consent to subcontract, as discussed in FAR Part 44, is to evaluate the efficiency and effectiveness with which the contractor spends Government funds, and complies with Government policy when subcontracting. The consent package provides the administrative contracting officer a basis for granting, or withholding consent to subcontract. The rule reduces the burden on contractors by placing greater reliance on purchasing system approvals, and by reducing the number of subcontract actions under which they must submit consent packages.

### B. Annual Reporting Burden

Public reporting burden for this collection of information is estimated to average *2 hours* per response, including the time for reviewing instructions, searching existing data sources, gathering and maintaining the data needed, and completing and reviewing the collection of information.

The annual reporting burden is estimated as follows: *Respondents:* 4,252; *responses per respondent:* 3.61; *total annual responses:* 15,344; *preparation hours per response:* .87; and *total response burden hours:* 13,384.

### Obtaining Copies of Justifications

Requester may obtain copies of justifications from the General Services Administration, FAR Secretariat (MVRS), Room 4037, 1800 F Street, NW., Washington, DC 20405, telephone (202) 501–4755. Please cite FAR case 95–011, Subcontract Consent, all correspondence.

Dated: April 15, 1997.

**Sharon A. Kiser,**

*FAR Secretariat.*

[FR Doc. 97–10245 Filed 4–18–97; 8:45 am]

BILLING CODE 6820–EP–P

## DEPARTMENT OF DEFENSE

## GENERAL SERVICES ADMINISTRATION

## NATIONAL AERONAUTICS AND SPACE ADMINISTRATION

## 48 CFR Parts 4, 22, 35, 36, 44, and 52

**[FAR Case 95–011]**

**RIN 9000–AH57**

## Federal Acquisition Regulation; Subcontract Consent

**AGENCIES:** Department of Defense (DOD), General Services Administration (GSA), and National Aeronautics and Space Administration (NASA).

**ACTION:** Proposed rule.

**SUMMARY:** The Civilian Agency Acquisition Council and the Defense Acquisition Regulations Council are proposing to amend the Federal Acquisition Regulation (FAR) to reduce the consent to subcontract requirements. The rule eliminates the requirement for consent to subcontract when there is an approved purchasing system, unless specifically required by the contracting officer. The rule also eliminates the consent requirement for fixed-price incentive contracts, and increases the threshold for the requirement on time-and-material contracts to the same level as other covered subcontracts. This regulatory action was not subject to Office of Management and Budget review under Executive Order 12866, dated September 30, 1993. This is not a major rule under 5 U.S.C. 804.

**DATES:** Comments should be submitted on or before June 20, 1997 to be considered in the formulation of a final rule.

**ADDRESSES:** Interested parties should submit written comments to: General Services Administration, FAR Secretariat (MVR), 1800 F Street, NW, Room 4035, Washington, DC 20405.

E-mail comments submitted over Internet should be addressed to: 95–011@www.arnet.gov.

Please cite FAR case 95–011 in all correspondence related to this case.

**FOR FURTHER INFORMATION CONTACT:** Ms. Linda Klein at (202) 501–3775 for information about content or clarification. For information pertaining to status or publication schedules, contact the FAR Secretariat, Room 4035, GS Building, Washington, DC 20405 (202) 501–4755. Please cite FAR case 95–011.

**SUPPLEMENTARY INFORMATION:**

### A. Background

This proposed rule amends the FAR as a result of recommendations of the Contract Administration Services Reform Process Action Team.

### B. Regulatory Flexibility Act

This proposed rule is not expected to have a significant economic impact on a substantial number of small entities within the meaning of the Regulatory Flexibility Act, 5 U.S.C. 601, *et seq.*, because the consent to subcontract requirement has a very small administrative cost that is passed along to the Government as part of the contract price. This rule will reduce the requirement for contractors to seek Government consent to subcontract. Also, this rule should have no effect upon small entities in terms of potential subcontracting opportunities since this rule does not change subcontracting requirements but only reduces the Government review and consent requirement. An Initial Regulatory Flexibility Analysis has, therefore, not been performed. Comments from small entities concerning the affected FAR subpart will be considered in accordance with 5 U.S.C. 610 of the Act. Such comments must be submitted separately and should cite 5 U.S.C. 601, *et seq.* (FAR case 95–011), in correspondence.

### C. Paperwork Reduction Act

The Paperwork Reduction Act applies because the proposed changes impose reporting or information collection requirements, or collections of information from offerors, contractors, or members of the public which require the approval of the Office of Management and Budget (OMB) under 44 U.S.C. 3501, *et seq.* Necessary requests for approval of the information collection requirements have been submitted to the Office of Management and Budget under Section 3507(d) of the Act.

*DATES:* Comments may be submitted on information collection requirements on or before June 20, 1997.

*ADDRESSES:* Send written comments on information collection requirements of this proposed rule to the Office of Information and Regulatory Affairs of OMB, Attn.: Mr. Peter N. Weiss, FAR Desk Officer, Room 10236, New Executive Office Building, Washington, DC 20503, and a copy to the FAR Secretariat at the address listed for comments on the proposed rule.

### List of Subjects in 48 CFR Parts 4, 22, 35, 36, 44, and 52

Government procurement.

Dated: April 2, 1997.

**Ralph Destefano,**

*Acting Director, Federal Acquisition Policy Division.*

Therefore, it is proposed that 48 CFR Parts 4, 22, 35, 6, 44, and 52 be amended as set forth below:

1. The authority citation for 48 CFR Parts 4, 22, 35, 6, 44, and 52 continues to read as follows:

**Authority:** 40 U.S.C. 486(c); 10 U.S.C. 2301 to 2331; and 42 U.S.C. 2473(c).

## PART 4—ADMINISTRATIVE MATTERS

**4.705–3 [Amended]**

2. Section 4.705–3 is amended in the parenthetical of paragraph (f) by removing ''52.244–1 and''.

## PART 22—APPLICATION OF LABOR LAWS TO GOVERNMENT ACQUISITIONS

3. Section 22.810 is amended by revising paragraph (g) to read as follows:

**22.810 Solicitation provisions and contract clauses.**

* * * * *

(g) The contracting officer shall insert the clause at

52.222–28, Equal Opportunity Preaward Clearance of Subcontracts, in solicitations and contracts, except for construction, when the amount of the contract is expected to be for $1 million or more and includes the clause prescribed in 44.204(a).

* * * * *

## PART 35—RESEARCH AND DEVELOPMENT CONTRACTING

4. Section 35.009 is amended by revising the last sentence of the paragraph to read as follows:

**35.009 Subcontracting research and development effort.**

* * * The clause at 52.244–2, Subcontracts, prescribed for certain types of contracts at 44.204(a), requires the contracting officer's prior approval for the placement of certain subcontracts.

## PART 36—CONSTRUCTION AND ARCHITECT-ENGINEER CONTRACTS

5. Section 36.606 is amended by revising paragraph (e) to read as follows:

**36.606 Negotiations.**

* * * * *

(e) Because selection of firms is based upon qualifications, the extent of any subcontracting is an important negotiation topic. The clause prescribed

at 44.204(b), ''Subcontractors and Outside Associates and Consultants (Architect-Engineer Services)'' (see 52.244–4), limits a firm's subcontracting to firms agreed upon during negotiations.

* * * * *

## PART 44—SUBCONTRACTING POLICIES AND PROCEDURES

6. Section 44.000 is revised to read as follows:

### 44.000 Scope of part.

This part prescribes policies and procedures for consent to subcontracts or advance notification of subcontracts, and for review, evaluation, and approval of contractors' purchasing systems.

### 44.102 [Removed]

7. Section 44.102 is removed.

8. Sections 44.201 and 44.201–1 are revised to read as follows:

### 44.201 Consent and advance notification requirements.

### 44.201–1 Consent requirements.

(a) If the contractor has an approved purchasing system, consent is required for subcontracts specifically identified by the contracting officer in the subcontracts clause of the contract. The contracting officer may require consent to subcontract if the contracting officer has determined that an individual consent action is required to protect the Government adequately because of the subcontract type, complexity, or value or because the subcontract needs special surveillance. These can be subcontracts for critical systems, subsystems, components, or services. Subcontracts may be identified by subcontract number or by class of items (*e.g.*, subcontracts for engines on a prime contract for airframes).

(b) If the contractor does not have an approved purchasing system, consent to subcontract is required under cost-reimbursement contracts, letter contracts, other unpriced contract actions (including unpriced modifications and unpriced delivery orders), time-and-materials contracts, or labor-hour contracts for—

(1) Cost-reimbursement, time-and-materials, or labor-hour subcontracts; and

(2) Fixed-price subcontracts that exceed the greater of—

(i) The simplified acquisition threshold, or

(ii) 5 percent of the total estimated cost of the prime contract.

(c) Consent may be required for subcontracts under prime contracts for architect-engineer services.

(d) The contracting officer's written authorization for the contractor to purchase from Government sources (see Part 51) constitutes consent.

9. Section 44.201–2 is revised to read as follows:

### 44.201–2 Advance notification requirements.

Under cost-reimbursement contracts, even if the contractor has an approved purchasing system and consent to subcontract is not required under 44.201–1, the contractor is required by statute (10 U.S.C. 2306(e) or 41 U.S.C. 254(b)) to notify the agency before the award of—

(a) Any cost-plus-fixed-fee subcontract; or

(b) Any fixed-price subcontract that exceeds—

(1) For the Department of Defense, the Coast Guard, and the National Aeronautics and Space Administration, the greater of the simplified acquisition threshold, or 5 percent of the estimated cost of the prime contract; or

(2) For civilian agencies other than the Coast Guard and the National Aeronautics and Space Administration, either the simplified acquisition threshold, or 5 percent of the estimated cost of the prime contract.

### 44.201–3 and 44.201–4 [Removed]

10. Sections 44.201–3 and 44.201–4 are removed.

11. Sections 44.202 and 44.202–1 are revised to read as follows:

### 44.202 Contracting officer's evaluation.

### 44.202–1 Responsibilities.

(a) The cognizant administrative contracting officer (ACO) is responsible for consent to subcontract, except when the contracting officer retains the contract for administration or withholds the consent responsibility from delegation to the ACO. In such cases, the contract administration office should assist the contracting office in its evaluation as requested.

(b) The contracting officer responsible for consent shall review the notification and supporting data to ensure that the proposed subcontract is appropriate for the risks involved and consistent with current policy and sound business judgment.

(c) Designation of specific subcontractors during contract negotiations does not in itself satisfy the requirements for advance notification or consent pursuant to the clause at 52.244–2. However, if, in the opinion of the contracting officer, the advance notification or consent requirements were satisfied for certain subcontracts evaluated during negotiations, the contracting officer shall specify in the contract that those requirements have been satisfied (see 44.204(a)(3)).

12. Section 44.202–2 is amended by revising paragraph (a) introductory text to read as follows:

### 44.202–2 Considerations.

(a) The contracting officer responsible for consent shall, at a minimum, review the request and supporting data and consider the following:

* * * * *

13. Section 44.204 is revised to read as follows:

### 44.204 Contract clauses.

(a)(1) The contracting officer shall insert the clause at 52.244–2, Subcontracts, in solicitations and contracts when contemplating:

(i) A cost-reimbursement contract;

(ii) A letter contract that exceeds the simplified acquisition threshold;

(iii) A fixed-price contract that exceeds the simplified acquisition threshold under which unpriced contract actions (including unpriced modifications or unpriced delivery orders) are anticipated;

(iv) A time-and-materials contract that exceeds the simplified acquisition threshold; or

(v) A labor-hour contract that exceeds the simplified acquisition threshold.

(2) If a cost-reimbursement contract is contemplated

(i) For the Department of Defense, the Coast Guard, and the National Aeronautics and Space Administration, the contracting officer shall use the clause with its Alternate I; or

(ii) For civilian agencies other than the Coast Guard and the National Aeronautics and Space Administration, the contracting officer shall use the clause with its Alternate II.

(3) If, in the opinion of the contracting officer, the advance notification or consent requirements were satisfied for certain subcontracts evaluated during negotiations, the contracting officer shall use the clause with its Alternate III.

(4) Use of this clause is not required in:

(i) Fixed-price architect-engineer contracts, or

(ii) Solicitations and contracts for mortuary services, refuse services, or shipment and storage of personal property, when an agency-prescribed clause on approval of subcontractors' facilities is required.

(b) The contracting officer may insert the clause at 52.244–4, Subcontractors and Outside Associates and

Consultants (Architect-Engineer Services), in fixed-price architect-engineer contracts.

(c) The contracting officer shall, when contracting by negotiation, insert the clause at 52.244–5, Competition in Subcontracting, in solicitations and contracts when the contract amount is expected to exceed the simplified acquisition threshold, unless—

(1) A firm-fixed price contract, awarded on the basis of adequate price competition or whose prices are set by law or regulation, is contemplated; or

(2) A time-and-materials, labor-hour, or architect-engineer contract is contemplated.

## PART 52—SOLICITATION PROVISIONS AND CONTRACT CLAUSES

### 52.244–1 [Removed and Reserved]

14. Section 52.244–1 is removed and reserved.

15. Section 52.244–2 is revised to read as follows:

### 52.244–2 Subcontracts.

As prescribed in 44.204(a)(1), insert the following clause:

Subcontracts (DATE)

(a) Definitions. As used in this clause—

*Approved purchasing system* means a Contractor's purchasing system that has been reviewed and approved in accordance with part 44 of the Federal Acquisition Regulation (FAR).

*Consent to subcontract* means the Contracting Officer's written consent for the prime Contractor to enter into a particular subcontract.

*Subcontract* means any contract as defined in FAR Subpart 2.1 entered into by a subcontractor to furnish supplies or services for performance of a prime contract or a subcontract. It includes but is not limited to purchase orders, and changes and modifications to purchase orders.

(b) This clause does not apply to subcontracts for special test equipment.

(c) When this clause is included in a fixed-price type contract, consent to subcontract is required only on unpriced contract actions (including unpriced modifications or unpriced delivery orders) under such contracts.

(d) If the Contractor does not have an approved purchasing system, consent to subcontract is required for any subcontract if—

(1) The proposed subcontract is of the cost-reimbursement, time-and-materials, or labor-hour type;

(2) The proposed subcontract is fixed-price and exceeds the greater of the simplified acquisition threshold or 5 percent of the total estimated cost of this contract.

(e) If the Contractor has an approved purchasing system, the Contractor nevertheless shall obtain the Contracting Officer's written consent before placing the following subcontracts:

_____

_____

(f)(1) The Contractor shall notify the Contracting Officer reasonably in advance of placing any subcontract or modification thereof for which consent is required under paragraph (c), (d), or (e) of this clause, including the following information:

(i) A description of the supplies or services to be subcontracted.

(ii) Identification of the type of subcontract to be used.

(iii) Identification of the proposed subcontractor.

(iv) The proposed subcontract price.

(v) The subcontractor's current, complete, and accurate cost or pricing data and Certificate of Current Cost or Pricing Data, if required by other contract provisions.

(vi) The subcontractor's Disclosure Statement or Certificate relating to Cost Accounting Standards when such data are required by other provisions of this contract.

(vii) A negotiation memorandum reflecting;

(A) The principal elements of the subcontract price negotiations;

(B) The most significant considerations controlling establishment of initial or revised prices;

(C) The reason cost or pricing data were or were not required;

(D) The extent, if any to which the Contractor did not rely on the subcontractor's cost or pricing data in determining the price objective and in negotiating the final price;

(E) The extent to which it was recognized in the negotiation that the subcontractor's cost or pricing data were not accurate, complete, or current; the action taken by the Contractor and the subcontractor; and the effect of any such defective data on the total price negotiated;

(F) The reasons for any significant difference between the Contractor's price objective and the price negotiated; and

(G) A complete explanation of the incentive fee or profit plan when incentives are used. The explanation shall identify each critical performance element, management decisions used to quantify each incentive element, reasons for the incentives, and a summary of all trade-off possibilities considered.

(2) The Contractor is not required to notify the Contracting Officer in advance of entering into any subcontract for which consent to subcontract is not required under paragraph (c), (d) or (e) of this clause.

(g) Unless the consent or approval specifically provides otherwise, neither consent by the Contracting Officer to any subcontract nor approval of the Contractor's purchasing system shall constitute a determination;

(1) Of the acceptability of any subcontract terms or conditions,

(2) Of the allowability of any cost under this contract, or

(3) To relieve the Contractor of any responsibility for performing this contract.

(h) No subcontract or modification thereof placed under this contract shall provide for payment on a cost-plus-a-percentage-of-cost basis, and any fee payable under cost-reimbursement type subcontracts shall not exceed the fee limitations in paragraph 15.903(d) of the FAR.

(i) The Contractor shall give the Contracting Officer immediate written notice of any action or suit filed and prompt notice of any claim made against the Contractor by any subcontractor or vendor that, in the opinion of the Contractor, may result in litigation related in any way to this contract, with respect to which the Contractor may be entitled to reimbursement from the Government.

(j) The Government reserves the right to review the Contractor's purchasing system as set forth in FAR Subpart 44.3.

(End of clause)

*Alternate I* (DATE). As prescribed in 44.204(a)(2)(i), substitute the following subparagraph (f)(2) for subparagraph (f)(2) of the basic clause:

(f)(2) If the Contractor has an approved purchasing system and consent is not required under paragraph (c), (d), or (e) of this clause, the Contractor nevertheless shall notify the Contracting Officer reasonably in advance of entering into any—

(i) Cost-plus-fixed-fee subcontract; or

(ii) Fixed-price subcontract that exceeds the greater of—

(A) The simplified acquisition threshold; or

(B) 5 percent of the total estimated cost of this contract. The notification shall include the information required in subparagraphs (f)(1)(i) through (f)(1)(iv) of this clause.

*Alternate II* (DATE). As prescribed in 44.204(a)(2)(ii), substitute the following subparagraph (f)(2) for subparagraph (f)(2) of the basic clause:

(f)(2) If the Contractor has an approved purchasing system and consent is not required under paragraph (c), (d), or (e) of this clause, the Contractor nevertheless shall notify the Contracting Officer reasonably in advance of entering into any (i) cost-plus-fixed-fee subcontract, or (ii) fixed-price subcontract that exceeds either (A) the simplified acquisition threshold or (B) 5 percent of the total estimated cost of this contract. The notification shall include the information required in subparagraphs (f)(1)(i) through (f)(1)(iv) of this clause.

*Alternate III* (DATE). As prescribed in 44.204(a)(3), add the following paragraph (k) to the basic clause:

(k) Paragraph (d) of this clause does not apply to the following subcontracts, which were evaluated during negotiations:

_____

_____

_____

### 52.244–3 [Removed and Reserved]

16. Section 52.244–3 is removed and reserved.

17. Section 52.244–4 is amended by revising the section heading, the introductory paragraph, and the clause heading to read as follows:

### 52.244–4 Subcontractors and Outside Associates and Consultants (Architect-Engineer Services).

As prescribed in 44.204(b), insert the following clause: Subcontractors and

Outside Associates and Consultants (Architect-Engineer Services) (Date)

* * * * *

18. Section 52.244–5 is amended by revising the introductory paragraph to read as follows:

**52.244–5 Competition in Subcontracting.**

As prescribed in 44.204(c), insert the following clause:

* * * * *

[FR Doc. 97–10246 Filed 4–18–97; 8:45 am]

BILLING CODE 6820–EP–P

federal register

Monday
April 21, 1997

## Part VIII

# The President

**Proclamation 6990—Education and Sharing Day, U.S.A., 1997**

Federal Register
Vol. 62, No. 76
Monday, April 21, 1997

# Presidential Documents

**Title 3—**

**The President**

**Proclamation 6990 of April 17, 1997**

## Education and Sharing day, U.S.A., 1997

**By the President of the United States of America**

**A Proclamation**

A commitment to learning has been at the heart of America's progress for more than 200 years. Now, as we stand on the threshold of the 21st century, our continued success as a Nation depends on the quality of education that we provide to all our citizens.

American children must have all the tools they need to make the most of their God-given potential. We must help them harness the powerful forces of technology, so that every student, including those in the most isolated rural towns and those in the poorest inner-city schools, has access to the vast universe of knowledge available on the Internet.

However, education involves more than books, facts, and homework assignments. Education also concerns the building of character. Character is an anchor of our society, and we should work hard to cultivate it among our young people. If our Nation is to continue to thrive and prosper, we must continue to live up to our ideals.

Rabbi Menachem Mendel Schneerson, the Lubavitcher Rebbe, grasped these fundamental truths. Espousing the values of education, morality, and civic duty throughout his distinguished life, he understood that learning and the sharing of experiences are crucial to developing the skills that will mold the character of each new generation. By striving to provide the best education possible, we can better prepare our Nation for the challenges that confront us as we move forward into the next century. The Rebbe rightly saw education as a continuous process of effort and experience, in which each person is nurtured from the cradle throughout life, bringing out the best in all of us.

I urge all Americans, on this day and throughout the year, to remember the teachings of the Rebbe, and to work in partnership with educators, administrators, community leaders, and parents to help our young people thrive and prosper.

NOW, THEREFORE, I, WILLIAM J. CLINTON, President of the United States of America, by virtue of the authority vested in me by the Constitution and laws of the United States, do hereby proclaim April 18, 1997, as Education and Sharing Day, U.S.A. I call upon all Americans to observe this day with appropriate activities and programs.

IN WITNESS WHEREOF, I have hereunto set my hand this seventeenth day of April, in the year of our Lord nineteen hundred and ninety-seven, and of the Independence of the United States of America the two hundred and twenty-first.

William J. Clinton

[FR Doc. 97–10485
Filed 4–21–97; 10:49 am]
Billing code 3195–01–P

# Reader Aids

**Federal Register**

Vol. 62, No. 76

Monday, April 21, 1997

## CUSTOMER SERVICE AND INFORMATION

**Federal Register/Code of Federal Regulations**

General Information, indexes and other finding aids **202–523–5227**

**Laws**

For additional information **523–5227**

**Presidential Documents**

Executive orders and proclamations **523–5227**

**The United States Government Manual** **523–5227**

**Other Services**

Electronic and on-line services (voice) **523–4534**

Privacy Act Compilation **523–3187**

TDD for the hearing impaired **523–5229**

## ELECTRONIC BULLETIN BOARD

Free **Electronic Bulletin Board** service for Public Law numbers, Federal Register finding aids, and list of documents on public inspection. **202–275–0920**

## FAX-ON-DEMAND

You may access our Fax-On-Demand service. You only need a fax machine and there is no charge for the service except for long distance telephone charges the user may incur. The list of documents on public inspection and the daily Federal Register's table of contents are available using this service. The document numbers are 7050-Public Inspection list and 7051-Table of Contents list. The public inspection list will be updated immediately for documents filed on an emergency basis.

**NOTE:** YOU WILL ONLY GET A LISTING OF DOCUMENTS ON FILE AND NOT THE ACTUAL DOCUMENT. Documents on public inspection may be viewed and copied in our office located at 800 North Capitol Street, N.W., Suite 700. The Fax-On-Demand telephone number is: **301–713–6905**

## FEDERAL REGISTER PAGES AND DATES, APRIL

15355–15598 ..... 1
15599–15808 ..... 2
15809–16052 ..... 3
16053–16464 ..... 4
16465–16658 ..... 7
16659–17040 ..... 8
17041–17530 ..... 9
17531–17682 .....10
17683–18014 .....11
18015–18260 .....14
18261–18504 .....15
18505–18704 .....16
18705–19022 .....17
19023–19218 .....18
19219–19472 .....21

## CFR PARTS AFFECTED DURING APRIL

At the end of each month, the Office of the Federal Register publishes separately a List of CFR Sections Affected (LSA), which lists parts and sections affected by documents published since the revision date of each title.

**3 CFR**

**Proclamations:**
6980 .....16033
6981 .....16035
6982 .....16039
6983 .....17681
6984 .....18015
6985 .....18497
6986 .....18501
6987 .....18501
6988 .....19017
6989 .....19021
6990 .....19471

**Executive Orders:**
February 21, 1913 (Revoked in part by PLO 7252) .....17633
13010 (amended by EO 13041) .....17039
13041 .....17039
13042 .....18017
12566 (revoked by EO l3043) .....19217
13043 .....19217

**Administrative Orders:**
Memorandum of April 1, 1997 .....18261

**5 CFR**

213 .....18505
532 .....16465
591 .....16218
1201 .....17041
1209 .....17047
1620 .....18234
1655 .....18019

**7 CFR**

56 .....18019
70 .....18019
301 .....15809
600 .....16659
601 .....16659
723 .....15599
916 .....15355
917 .....15355
946 .....18021
956 .....18023
982 .....18026
989 .....18029
1208 .....18033
1427 .....19023
1710 .....18037
1901 .....16465
1940 .....16465
1951 .....16465
2003 .....16465
3570 .....16465

**Proposed Rules:**
300 .....16218
319 .....16218, 16737
401 .....17758
447 .....17103
455 .....19063
456 .....19068
457 .....17103, 17758, 19063, 19067
981 .....17569
1137 .....16737
1435 .....15622
1703 .....18544
1730 .....18678
4279 .....17107
4287 .....17107

**8 CFR**

3 .....15362, 17048
208 .....15362
212 .....18506
214 .....18508
236 .....15362
245 .....18506
248 .....18506
274a .....18508
287 .....19024
299 .....19024
312 .....15751

**9 CFR**

94 .....18263, 19032
101 .....19033
113 .....19033
156 .....19039
205 .....15363

**Proposed Rules:**
94 .....18055

**10 CFR**

0 .....16053
25 .....17683
50 .....17683
54 .....17683
95 .....17683

**Proposed Rules:**
20 .....19071
30 .....19071
40 .....19071
50 .....19071
51 .....19071
70 .....19071
72 .....19071
430 .....16739

**11 CFR**

111 .....18167

**12 CFR**

208 .....15600
213 .....15364, 16053
303 .....16662
560 .....15819
600 .....18037
603 .....18037
611 .....18037
614 .....18037, 19219

619....18037
1805....16444
**Proposed Rules:**
226....15624
361....18059
516....17110
543....17110, 17115
545....15626, 17110
552....17110
556....15626, 17110
557....15626
561....15626
563....15626, 17110
563g....15626
614....18167
627....18167
Ch. IX....17108

**13 CFR**

120....15601

**14 CFR**

1....16220
21....15570
25....15570, 17048, 17531
39....15373, 15375, 15378, 16064, 16066, 16067, 16069, 16070, 16072, 16073, 16473, 16474, 16475, 16477, 16664, 16667, 17532, 17534, 17536, 17537
61....16220, 16892
71....15602, 15603, 15751, 15825, 15826, 15827, 16075, 16076, 16668, 17052, 17053, 17054, 17055, 17056, 17057, 17058, 17059, 17060, 17698, 18038, 18039, 18040, 18264
73....17699
91....15570, 17480
97....17061, 17063, 17539, 17541
107....15751
108....15751
109....15751
119....15570
121....15570
125....15570
129....15751
135....15570
141....16220
143....16220
191....15751
**Proposed Rules:**
25....17117
39....15429, 15431, 15433, 15435, 15437, 15439, 15441, 15443, 15861, 16113, 16115, 17128, 17127, 17129, 17131, 18062, 18063, 18302, 18304, 18726
71....15635, 15863, 15864, 17134, 17135, 18065, 18066, 18067, 18068, 18167, 19238
107....16892
108....16892
198....19008

**15 CFR**

280....19041
902....15381, 19042

**16 CFR**

23....16669
**Proposed Rules:**
432....16500
456....15865
703....15636

**17 CFR**

1....17700
4....18265
11....17702
30....16687
145....17068
202....15604, 16076
232....16690
240....18514
270....17512

**18 CFR**

2....15827

**19 CFR**

19....15831
113....15831
144....15831

**20 CFR**

367....19219
404....15607
**Proposed Rules:**
335....19072

**21 CFR**

74....15389
101....15390
178....19220
510....15751
556....15391
558....15391, 15751
1300....15391
1309....15391
1310....15391
**Proposed Rules:**
170....18938
184....18938
186....18938
570....18938
589....18728

**22 CFR**

514....19221

**23 CFR**

625....15392

**24 CFR**

50....15800
55....15800
103....15794
570....17492
**Proposed Rules:**
Ch. I....18306

**25 CFR**

12....15610
142....18515
**Proposed Rules:**
41....15446

**26 CFR**

54....16894, 17004
**Proposed Rules:**
1....17572, 18730, 19072
25....19072
54....17004

**27 CFR**

4....16479
178....19442
**Proposed Rules:**
9....16502
178....19442

**28 CFR**

**Proposed Rules:**
524....19430

**29 CFR**

1603....17542
2520....16979
2590....16894, 17004
2703....18705
4044....18268
**Proposed Rules:**
2570....19078

**30 CFR**

254....18040
756....18269
773....19450
778....19450
843....19450
915....16490, 19394
943....19394
**Proposed Rules:**
202....16121
216....16121
243....16116
250....18070
253....15639
926....16506
944....16507
946....16509

**31 CFR**

4....18518
357....18694
500....17548

**32 CFR**

2....17548
310....18518
701....15614
706....18272, 18274
806b....17070
**Proposed Rules:**
199....16510
216....16691
552....15639

**33 CFR**

5....16695
26....16695
27....16695
95....16695
100....16695, 17702, 18041, 18042
110....16695
117....15842, 17071, 19222
130....16695
136....16695
138....16695
140....16695
151....16695, 18043
153....16695
155....16492
165....15398, 16080, 16081, 17704
177....16695
334....17549
**Proposed Rules:**
100....16513, 19239, 19240
117....16122, 17762, 19082, 19243, 19245
165....17764

**35 CFR**

103....18275
104....18275

**36 CFR**

**Proposed Rules:**
13....18547
327....18307
1190....19084
1191....19084
1193....19178
1258....15867

**37 CFR**

201....18705

**38 CFR**

1....15400
3....17706
17....17072
21....17706

**39 CFR**

3....18519
4....18519
20....17072, 19223

**40 CFR**

9....16492
52....15751, 15844, 16704, 17081, 17083, 17084, 17087, 17093, 17095, 18046, 18047, 18520, 18521, 18710, 18712, 18716, 19047, 19049, 19051, 19055, 19224
58....18523
60....18277
63....15402, 15404
80....16082
81....15751, 18521, 18526
91....15806
180....15615, 17096, 17710, 17717, 17720, 17723, 17730, 17735, 17742, 18528
185....17723, 17730, 17735, 17742, 18528
186....17723, 17730, 17735, 17742, 18528
271....15407
300....15411, 15572, 16706, 16707
700....17910
720....17910
721....17910
723....17910
725....17910
**Proposed Rules:**
52....15867, 16746, 17136, 17137, 17572, 17768, 18070, 18071, 18556, 18730, 19085, 19086, 19087, 19246
58....18557
60....18308
63....15452, 15453, 15754
70....16124
71....19087
80....17771, 18696
81....18556, 18557
92....18557
247....18072
261....16747, 19087
268....16753
300....15572

**43 CFR**

**Proposed Rules:**
2800 ....19247
2920 ....19247
4100 ....19247
3190 ....17138
3400 ....17141
3410 ....17141
3420 ....17141
3440 ....17141
3450 ....17141
3460 ....17141
3470 ....17141
3480 ....17141
4300 ....19247
4700 ....19247
5460 ....19247
5510 ....19247
8200 ....19247
8340 ....19247
8350 ....19247
9370 ....19247
8370 ....19247
8560 ....19247
9210 ....19247
9260 ....19247

**44 CFR**

64 ....16084
65 ....16087, 17560, 17561
67 ....16089, 17562

**Proposed Rules:**
67 ....16125, 17562

**45 CFR**

144 ....16894
146 ....16894
148 ....17004
1609 ....19399
1612 ....19399
1620 ....19399
1626 ....19399
1627 ....19399
1636 ....19399
1637 ....19399
1638 ....19399
1640 ....19399

**46 CFR**

2 ....16695, 17748, 19229
586 ....18532, 18533

**Proposed Rules:**
8 ....17008

**47 CFR**

0 ....15852, 17566, 19247
Ch. I ....16093
1 ....15852, 18834, 19247
2 ....15978
20 ....18834
27 ....16099, 16493
36 ....15412
52 ....18280, 19056
64 ....19056
73 ....15858, 17749, 18535
74 ....18834
90 ....15978, 18536, 18834
97 ....17566
101 ....18834

**Proposed Rules:**
1 ....18074
2 ....16004, 16129
25 ....16129, 18308, 19095
63 ....15868
73 ....15869, 15870, 15871, 15872, 17772, 17773, 17774, 18558
90 ....16004
101 ....16514

**48 CFR**

235 ....16099
807 ....18300
852 ....18300
1401 ....18053

**Proposed Rules:**
4 ....19465
12 ....19200
14 ....19200
15 ....19200
22 ....19465
26 ....19200
35 ....19465
36 ....19200, 19465
44 ....19465
52 ....19200, 19465

**49 CFR**

1 ....16498, 17100
6 ....19233
29 ....15620
40 ....19057
171 ....16107
Ch. III ....16370
214 ....19234
367 ....15417
368 ....15417
371 ....15417
372 ....15417
373 ....15417
374 ....15417
376 ....15417
377 ....15417
378 ....15417
387 ....16707
390 ....16707
395 ....16707
531 ....17100
533 ....15859
571 ....16707, 16718, 18723
589 ....16718
1312 ....19058

**Proposed Rules:**
192 ....16131
195 ....16131
390 ....18170
392 ....18170
393 ....18170, 19252
571 ....15353, 16131, 19253

**50 CFR**

229 ....16108
600 ....18300
622 ....18536
648 ....15381, 15425, 18300
678 ....16648, 16656
679 ....16112, 16736, 17568, 17749, 17753, 18167, 18542, 18725, 19061, 19062, 19394

**Proposed Rules:**
17 ....15640, 15646, 15872, 15873, 16518
23 ....18559, 18731
216 ....17774, 17774
229 ....16519
285 ....16132
622 ....17776,
630 ....16132, 19296
644 ....16132
648 ....16753, 17576, 18309
660 ....15874, 18572
678 ....16132

## REMINDERS

The items in this list were editorially compiled as an aid to Federal Register users. Inclusion or exclusion from this list has no legal significance.

## RULES GOING INTO EFFECT APRIL 21, 1997

**AGRICULTURE DEPARTMENT**

**Animal and Plant Health Inspection Service**

Viruses, serums, toxins, etc.:

Veterinary biologics establishment licenses and biological product licenses and permits; published 3-20-97

**COMMERCE DEPARTMENT**

**National Oceanic and Atmospheric Administration**

Fishery conservation and management:

Caribbean, Gulf, and South Atlantic fisheries—

South Atlantic shrimp; published 4-16-97

**ENVIRONMENTAL PROTECTION AGENCY**

Air quality implementation plans; approval and promulgation; various States:

Indiana; published 2-18-97

Tennessee; published 2-18-97

**FEDERAL COMMUNICATIONS COMMISSION**

Common carrier services:

Competitive bidding procedures; published 3-21-97

Radio stations; table of assignments:

California; published 3-14-97

Texas; published 3-14-97

**FEDERAL RESERVE SYSTEM**

Bank holding companies and change in bank control (Regulation Y):

Bank holding companies competitiveness improvement; published 2-28-97

**HEALTH AND HUMAN SERVICES DEPARTMENT**

**Food and Drug Administration**

Food additives:

Adjuvants, production aids, and sanitizers—

4-cloro-2-[[5-hydroxy-3-methyl-1-(3-sulfophenyl)-1H-pyrazol-4-yl]azo]-5-methylbenzenesulfonic acid, calcium salt (1:1); (C.I. Pigment Yellow 191); published 4-21-97

**JUSTICE DEPARTMENT**

Communications Assistance for Law Enforcement Act; implementation:

Telecommunications carriers reimbursement procedures; published 3-20-97

**PANAMA CANAL COMMISSION**

Shipping and navigation:

Vessel transit reservation system; transit schedule preference, transiting vessels order, and passenger steamers preference; published 4-15-97

**POSTAL SERVICE**

International Mail Manual:

Global package link (GPL) service—

Catalog harmonization fees; published 4-21-97

**RAILROAD RETIREMENT BOARD**

Debt Collection Improvement Act of 1996:

Collection of debts by offset against Federal payments; published 4-21-97

**TRANSPORTATION DEPARTMENT**

**Coast Guard**

Vessel inspections:

User fees; reductions and exemptions; published 4-21-97

**TRANSPORTATION DEPARTMENT**

**Federal Aviation Administration**

Air traffic operating and flight rules:

Sensitive security information; protection from unauthorized disclosure; published 3-21-97

Airworthiness directives:

de Havilland; published 3-17-97

Class D airspace; published 2-20-97

**TREASURY DEPARTMENT**

**Alcohol, Tobacco and Firearms Bureau**

Alcohol, tobacco, and other excise taxes:

Persons acquiring firearms; residency requirements; published 4-21-97

**UNITED STATES INFORMATION AGENCY**

Exchange visitor program:

Two-year return home requirement; waiver requests by interested U.S. Government agencies; published 4-21-97

## COMMENTS DUE NEXT WEEK

**AGRICULTURE DEPARTMENT**

**Rural Business-Cooperative Service**

Grants and cooperative agreements; availability, etc.:

Rural cooperative development program; comments due by 4-25-97; published 3-26-97

**AGRICULTURE DEPARTMENT**

**Rural Utilities Service**

Grants and cooperative agreements; availability, etc.:

Rural cooperative development program; comments due by 4-25-97; published 3-26-97

**COMMERCE DEPARTMENT**

**National Oceanic and Atmospheric Administration**

Fishery conservation and management:

Magnuson Act provisions; comments due by 4-21-97; published 3-20-97

Northeastern United States fisheries—

Mid-Atlantic Fishery Management Council; public hearings; comments due by 4-25-97; published 3-12-97

**COMMODITY FUTURES TRADING COMMISSION**

Securities:

Customer funds held in segregated accounts by futures commission merchants; investment; comments due by 4-21-97; published 3-21-97

**DEFENSE DEPARTMENT**

Acquisition regulations:

Ball and roller bearings; waiver; comments due by 4-21-97; published 2-19-97

Freedom of Information Act; implementation; comments due by 4-21-97; published 2-19-97

Revitalizing base closure communities and community assistance; comments due by 4-22-97; published 2-21-97

**ENVIRONMENTAL PROTECTION AGENCY**

Air pollution control; new motor vehicles and engines:

Light-duty vehicles and trucks—

Durability testing procedures and allowable maintenance; indefinite extension; comments due by 4-25-97; published 3-11-97

Air quality implementation plans; approval and promulgation; various States:

Connecticut; comments due by 4-25-97; published 3-26-97

Kansas; comments due by 4-23-97; published 3-24-97

Michigan; comments due by 4-21-97; published 3-20-97

Missouri; comments due by 4-23-97; published 3-24-97

Nebraska; comments due by 4-21-97; published 3-20-97

New Mexico; comments due by 4-25-97; published 3-26-97

Tennessee; comments due by 4-25-97; published 3-26-97

Washington; comments due by 4-21-97; published 3-20-97

Air quality implementation plans; √A√approval and promulgation; various States; air quality planning purposes; designation of areas:

Colorado; comments due by 4-21-97; published 3-20-97

Solid wastes:

Hazardous waste combustors; continuous emissions monitoring systems; comments due by 4-21-97; published 3-21-97

Superfund program:

National oil and hazardous substances contingency plan—

National priorities list update; comments due by 4-21-97; published 3-21-97

**FEDERAL COMMUNICATIONS COMMISSION**

Common carrier services:

Public mobile services—

Multiple address systems; 932/941 and 928/959 MHz band allocations; comments due by 4-21-97; published 3-12-97

Radio services, special:

Fixed microwave services—
Local multipoint distribution service; 28 GHz and 31 GHz bands use; comments due by 4-21-97; published 4-7-97
Radio stations; table of assignments:
Missouri; comments due by 4-21-97; published 3-5-97
Montana; comments due by 4-21-97; published 3-5-97
Oklahoma; comments due by 4-21-97; published 3-5-97
Washington; comments due by 4-21-97; published 3-5-97

**FEDERAL DEPOSIT INSURANCE CORPORATION**
Resolution and receivership rules:
Least cost resolutions; comments due by 4-21-97; published 2-20-97

**FEDERAL ELECTION COMMISSION**
Rulemaking petitions:
Bopp, James, Jr.; comments due by 4-21-97; published 3-20-97

**FEDERAL TRADE COMMISSION**
Trade regulation rules:
Leakproof, guaranteed leakproof, etc.; deceptive use as descriptive of dry cell batteries; comments due by 4-24-97; published 3-25-97

**GENERAL SERVICES ADMINISTRATION**
Freedom of Information Act; implementation:
Agency records and information materials; public availability; comments due by 4-24-97; published 3-25-97

**HEALTH AND HUMAN SERVICES DEPARTMENT**
**Food and Drug Administration**
Food for human consumption:
Food labeling—
Nutrient content claims pertaining to available fat content of food; comments due by 4-21-97; published 12-20-96
Nutrient content claims; general principles; comments due by 4-24-97; published 3-11-97
Medical devices:
Manufacturer and distributor certification and appointment of U.S. designated agents; adverse events reporting requirements; comments due by 4-21-97; published 3-20-97

**INTERIOR DEPARTMENT**
**Land Management Bureau**
Preservation and conservation:
Designated wilderness areas; comments due by 4-21-97; published 2-18-97

**INTERIOR DEPARTMENT**
**Surface Mining Reclamation and Enforcement Office**
Permanent program and abandoned mine land reclamation plan submissions:
Maryland; comments due by 4-24-97; published 3-25-97
Utah; comments due by 4-22-97; published 4-7-97
Virginia; comments due by 4-22-97; published 4-7-97

**LABOR DEPARTMENT**
**Mine Safety and Health Administration**
Coal, metal, and nonmetal mine safety and health:
Occupational noise exposure; comments due by 4-21-97; published 2-6-97

**TRANSPORTATION DEPARTMENT**
**Coast Guard**
Regattas and marine parades:
Norfolk Harbor marine events; comments due by 4-22-97; published 2-21-97

**TRANSPORTATION DEPARTMENT**
**Federal Aviation Administration**
Airworthiness directives:
de Havilland; comments due by 4-25-97; published 3-18-97
Aerospatiale; comments due by 4-21-97; published 2-20-97
Air Tractor, Inc.; comments due by 4-21-97; published 2-19-97
AlliedSignal Inc. et al.; comments due by 4-21-97; published 2-20-97
Boeing; comments due by 4-23-97; published 3-14-97
Dornier; comments due by 4-21-97; published 3-12-97
Grob Luft-und Raumfahrt, GmbH; comments due by 4-21-97; published 2-19-97
Industrie Aeronautiche E Meccaniche; comments due by 4-25-97; published 2-14-97
Pratt & Whitney; comments due by 4-25-97; published 2-24-97
Raytheon; comments due by 4-25-97; published 2-20-97
Saab; comments due by 4-21-97; published 3-12-97
Airworthiness standards:
Special conditions—
Boeing model 474-200B airplane; comments due by 4-25-97; published 3-11-97
Class D airspace; comments due by 4-21-97; published 2-20-97
Class E airspace; comments due by 4-21-97; published 2-20-97

**TRANSPORTATION DEPARTMENT**
**Federal Railroad Administration**
Railroad safety; passenger train emergency preparedness plans; comments due by 4-25-97; published 2-24-97

**TRANSPORTATION DEPARTMENT**
**National Highway Traffic Safety Administration**
Insurer reporting requirements:
Insurers required to file motor vehicle theft loss experiences reports; list; comments due by 4-25-97; published 2-24-97
Motor vehicle theft prevention standard:
Passenger motor vehicle theft data (1995 CY); comments due by 4-22-97; published 2-21-97

**TRANSPORTATION DEPARTMENT**
**Surface Transportation Board**
Practice and procedure:
Statutory jurisdiction; voluntary arbitration of certain disputes; comments due by 4-25-97; published 3-26-97

**TREASURY DEPARTMENT**
**Customs Service**
Drawback; manufacturing, unused merchandise, etc.; comments due by 4-24-97; published 3-3-97

**TREASURY DEPARTMENT**
**Internal Revenue Service**
Income taxes:
Installment obligations received from liquidating corporations; partial withdrawal; comments due by 4-22-97; published 1-22-97
Research activities increase, credit; hearing; comments due by 4-22-97; published 1-2-97

**TREASURY DEPARTMENT**
Currency and foreign transactions; financial reporting and recordkeeping requirements:
Bank Secrecy Act; implementation—
Cross-border transportation of certain monetary instruments; comments due by 4-22-97; published 1-22-97
Privacy Act; implementation; comments due by 4-25-97; published 3-26-97

**VETERANS AFFAIRS DEPARTMENT**
Adjudication; pensions, compensation, dependency, etc.:
Dental conditions; service connection for treatment purposes; comments due by 4-25-97; published 2-24-97
Disabilities rating schedule:
Intervertebral disc syndrome; comments due by 4-25-97; published 2-24-97

## CFR CHECKLIST

This checklist, prepared by the Office of the Federal Register, is published weekly. It is arranged in the order of CFR titles, stock numbers, prices, and revision dates.

An asterisk (*) precedes each entry that has been issued since last week and which is now available for sale at the Government Printing Office.

**A "●" precedes each entry that is now available on-line through the Government Printing Office's** *GPO Access* **service at http://www.access.gpo.gov/nara/cfr. For information about** *GPO Access* **call 1-888-293-6498 (toll free).**

A checklist of current CFR volumes comprising a complete CFR set, also appears in the latest issue of the LSA (List of CFR Sections Affected), which is revised monthly.

The annual rate for subscription to all revised volumes is $951.00 domestic, $237.75 additional for foreign mailing.

Mail orders to the Superintendent of Documents, Attn: New Orders, P.O. Box 371954, Pittsburgh, PA 15250–7954. All orders must be accompanied by remittance (check, money order, GPO Deposit Account, VISA, or Master Card). Charge orders may be telephoned to the GPO Order Desk, Monday through Friday, at **(202) 512–1800** from 8:00 a.m. to 4:00 p.m. eastern time, or FAX your charge orders to **(202) 512-2250**.

| Title | Stock Number | Price | Revision Date |
|---|---|---|---|
| ●**1, 2 (2** Reserved) | (869–032–00001–8) | $5.00 | Feb. 1, 1997 |
| ●**3** (1996 Compilation and Parts 100 and 101) | (869–032–00002–6) | 20.00 | [1] Jan. 1, 1997 |
| ●**4** | (869–032–00003–4) | 7.00 | Jan. 1, 1997 |
| **5 Parts:** | | | |
| *●1–699 | (869–032–0004–2) | 34.00 | Jan. 1, 1997 |
| ●700–1199 | (869–032–00005–1) | 26.00 | Jan. 1, 1997 |
| ●1200–End, 6 (6 Reserved) | (869–032–00006–9) | 33.00 | Jan. 1, 1997 |
| **7 Parts:** | | | |
| ●0–26 | (869–032–00007–7) | 26.00 | Jan. 1, 1997 |
| ●27–45 | (869–028–00008–8) | 11.00 | Jan. 1, 1996 |
| 46–51 | (869–028–00009–6) | 13.00 | Jan. 1, 1996 |
| 52 | (869–028–00010–0) | 5.00 | Jan. 1, 1996 |
| ●53–209 | (869–028–00011–8) | 17.00 | Jan. 1, 1996 |
| ●210–299 | (869–028–00012–6) | 35.00 | Jan. 1, 1996 |
| ●300–399 | (869–032–00011–5) | 22.00 | Jan. 1, 1997 |
| ●400–699 | (869–032–00012–3) | 28.00 | Jan. 1, 1997 |
| ●700–899 | (869–028–00015–1) | 25.00 | Jan. 1, 1996 |
| 900–999 | (869–032–00014–0) | 40.00 | Jan. 1, 1997 |
| *●1000–1199 | (869–032–00015–8) | 45.00 | Jan. 1, 1997 |
| ●1200–1499 | (869–032–00016–6) | 33.00 | Jan. 1, 1997 |
| 1500–1899 | (869–028–00019–3) | 41.00 | Jan. 1, 1996 |
| ●1900–1939 | (869–032–00018–2) | 19.00 | Jan. 1, 1997 |
| *●1940–1949 | (869–032–00019–1) | 40.00 | Jan. 1, 1997 |
| 1950–1999 | (869–028–00022–3) | 39.00 | Jan. 1, 1996 |
| ●2000–End | (869–028–00023–1) | 15.00 | Jan. 1, 1996 |
| ●**8** | (869–032–00022–1) | 30.00 | Jan. 1, 1997 |
| **9 Parts:** | | | |
| ●1–199 | (869–032–00023–9) | 39.00 | Jan. 1, 1997 |
| ●200–End | (869–028–00026–6) | 25.00 | Jan. 1, 1996 |
| **10 Parts:** | | | |
| ●0–50 | (869–028–00027–4) | 30.00 | Jan. 1, 1996 |
| ●51–199 | (869–032–00026–3) | 31.00 | Jan. 1, 1997 |
| 200–399 | (869–028–00029–1) | 5.00 | Jan. 1, 1996 |
| 400–499 | (869–028–00030–4) | 21.00 | Jan. 1, 1996 |
| 500–End | (869–028–00031–2) | 34.00 | Jan. 1, 1996 |
| ●**11** | (869–032–00029–8) | 20.00 | Jan. 1, 1997 |
| **12 Parts:** | | | |
| ●1–199 | (869–028–00033–9) | 12.00 | Jan. 1, 1996 |
| ●200–219 | (869–028–00034–7) | 17.00 | Jan. 1, 1996 |
| ●220–299 | (869–028–00035–5) | 29.00 | Jan. 1, 1996 |
| ●300–499 | (869–028–00036–3) | 21.00 | Jan. 1, 1996 |
| ●500–599 | (869–028–00037–1) | 20.00 | Jan. 1, 1996 |
| ●600–End | (869–028–00038–0) | 31.00 | Jan. 1, 1996 |
| ***●13** | (869–032–00036–1) | 23.00 | Jan. 1, 1997 |
| **14 Parts:** | | | |
| 1–59 | (869–028–00040–1) | 34.00 | Jan. 1, 1996 |
| 60–139 | (869–028–00041–0) | 30.00 | Jan. 1, 1996 |
| ●140–199 | (869–028–00042–8) | 13.00 | Jan. 1, 1996 |
| 200–1199 | (869–028–00043–6) | 23.00 | Jan. 1, 1996 |
| *●1200–End | (869–032–00041–7) | 21.00 | Jan. 1, 1997 |
| **15 Parts:** | | | |
| 0–299 | (869–028–00045–2) | 16.00 | Jan. 1, 1996 |
| 300–799 | (869–028–00046–1) | 26.00 | Jan. 1, 1996 |
| 800–End | (869–028–00047–9) | 18.00 | Jan. 1, 1996 |
| **16 Parts:** | | | |
| 0–149 | (869–028–00048–7) | 6.50 | Jan. 1, 1996 |
| 150–999 | (869–028–00049–5) | 19.00 | Jan. 1, 1996 |
| 1000–End | (869–028–00050–9) | 26.00 | Jan. 1, 1996 |
| **17 Parts:** | | | |
| 1–199 | (869–028–00052–5) | 21.00 | Apr. 1, 1996 |
| 200–239 | (869–028–00053–3) | 25.00 | Apr. 1, 1996 |
| 240–End | (869–028–00054–1) | 31.00 | Apr. 1, 1996 |
| **18 Parts:** | | | |
| 1–149 | (869–028–00055–0) | 17.00 | Apr. 1, 1996 |
| 150–279 | (869–028–00056–8) | 12.00 | Apr. 1, 1996 |
| 280–399 | (869–028–00057–6) | 13.00 | Apr. 1, 1996 |
| 400–End | (869–028–00058–4) | 11.00 | Apr. 1, 1996 |
| **19 Parts:** | | | |
| 1–140 | (869–028–00059–2) | 26.00 | Apr. 1, 1996 |
| 141–199 | (869–028–00060–6) | 23.00 | Apr. 1, 1996 |
| 200–End | (869–028–00061–4) | 12.00 | Apr. 1, 1996 |
| **20 Parts:** | | | |
| 1–399 | (869–028–00062–2) | 20.00 | Apr. 1, 1996 |
| ●400–499 | (869–028–00063–1) | 35.00 | Apr. 1, 1996 |
| 500–End | (869–028–00064–9) | 32.00 | Apr. 1, 1996 |
| **21 Parts:** | | | |
| ●1–99 | (869–028–00065–7) | 16.00 | Apr. 1, 1996 |
| ●100–169 | (869–028–00066–5) | 22.00 | Apr. 1, 1996 |
| ●170–199 | (869–028–00067–3) | 29.00 | Apr. 1, 1996 |
| ●200–299 | (869–028–00068–1) | 7.00 | Apr. 1, 1996 |
| ●300–499 | (869–028–00069–0) | 50.00 | Apr. 1, 1996 |
| ●500–599 | (869–028–00070–3) | 28.00 | Apr. 1, 1996 |
| ●600–799 | (869–028–00071–1) | 8.50 | Apr. 1, 1996 |
| ●800–1299 | (869–028–00072–0) | 30.00 | Apr. 1, 1996 |
| ●1300–End | (869–028–00073–8) | 14.00 | Apr. 1, 1996 |
| **22 Parts:** | | | |
| 1–299 | (869–028–00074–6) | 36.00 | Apr. 1, 1996 |
| 300–End | (869–028–00075–4) | 24.00 | Apr. 1, 1996 |
| **23** | (869–028–00076–2) | 21.00 | Apr. 1, 1996 |
| **24 Parts:** | | | |
| 0–199 | (869–028–00077–1) | 30.00 | May 1, 1996 |
| 200–219 | (869–028–00078–9) | 14.00 | May 1, 1996 |
| 220–499 | (869–028–00079–7) | 13.00 | May 1, 1996 |
| 500–699 | (869–028–00080–1) | 14.00 | May 1, 1996 |
| 700–899 | (869–028–00081–9) | 13.00 | May 1, 1996 |
| 900–1699 | (869–028–00082–7) | 21.00 | May 1, 1996 |
| 1700–End | (869–028–00083–5) | 14.00 | May 1, 1996 |
| **25** | (869–028–00084–3) | 32.00 | May 1, 1996 |
| **26 Parts:** | | | |
| §§ 1.0-1–1.60 | (869–028–00085–1) | 21.00 | Apr. 1, 1996 |
| §§ 1.61–1.169 | (869–028–00086–0) | 34.00 | Apr. 1, 1996 |
| §§ 1.170–1.300 | (869–028–00087–8) | 24.00 | Apr. 1, 1996 |
| §§ 1.301–1.400 | (869–028–00088–6) | 17.00 | Apr. 1, 1996 |
| §§ 1.401–1.440 | (869–028–00089–4) | 31.00 | Apr. 1, 1996 |
| §§ 1.441-1.500 | (869-028-00090-8) | 22.00 | Apr. 1, 1996 |
| §§ 1.501–1.640 | (869–028–00091–6) | 21.00 | Apr. 1, 1996 |
| §§ 1.641–1.850 | (869–028–00092–4) | 25.00 | Apr. 1, 1996 |
| §§ 1.851–1.907 | (869–028–00093–2) | 26.00 | Apr. 1, 1996 |
| §§ 1.908–1.1000 | (869–028–00094–1) | 26.00 | Apr. 1, 1996 |
| §§ 1.1001–1.1400 | (869–028–00095–9) | 26.00 | Apr. 1, 1996 |
| §§ 1.1401–End | (869–028–00096–7) | 35.00 | Apr. 1, 1996 |

| Title | Stock Number | Price | Revision Date |
|---|---|---|---|
| 2–29 | (869–028–00097–5) | 28.00 | Apr. 1, 1996 |
| 30–39 | (869–028–00098–3) | 20.00 | Apr. 1, 1996 |
| 40–49 | (869–028–00099–1) | 13.00 | Apr. 1, 1996 |
| 50–299 | (869–028–00100–9) | 14.00 | Apr. 1, 1996 |
| 300–499 | (869–028–00101–7) | 25.00 | Apr. 1, 1996 |
| 500–599 | (869–028–00102–5) | 6.00 | [4] Apr. 1, 1990 |
| 600–End | (869–028–00103–3) | 8.00 | Apr. 1, 1996 |
| **27 Parts:** | | | |
| 1–199 | (869–028–00104–1) | 44.00 | Apr. 1, 1996 |
| 200–End | (869–028–00105–0) | 13.00 | Apr. 1, 1996 |
| **28 Parts:** | | | |
| 1-42 | (869–028–00106–8) | 35.00 | July 1, 1996 |
| 43-end | (869-028-00107-6) | 30.00 | July 1, 1996 |
| **29 Parts:** | | | |
| 0–99 | (869–028–00108–4) | 26.00 | July 1, 1996 |
| 100–499 | (869–028–00109–2) | 12.00 | July 1, 1996 |
| 500–899 | (869–028–00110–6) | 48.00 | July 1, 1996 |
| 900–1899 | (869–028–00111–4) | 20.00 | July 1, 1996 |
| 1900–1910 (§§ 1900 to 1910.999) | (869–028–00112–2) | 43.00 | July 1, 1996 |
| 1910 (§§ 1910.1000 to end) | (869–028–00113–1) | 27.00 | July 1, 1996 |
| 1911–1925 | (869–028–00114–9) | 19.00 | July 1, 1996 |
| 1926 | (869–028–00115–7) | 30.00 | July 1, 1996 |
| 1927–End | (869–028–00116–5) | 38.00 | July 1, 1996 |
| **30 Parts:** | | | |
| 1–199 | (869–028–00117–3) | 33.00 | July 1, 1996 |
| 200–699 | (869–028–00118–1) | 26.00 | July 1, 1996 |
| 700–End | (869–028–00119–0) | 38.00 | July 1, 1996 |
| **31 Parts:** | | | |
| 0–199 | (869–028–00120–3) | 20.00 | July 1, 1996 |
| 200–End | (869–028–00121–1) | 33.00 | July 1, 1996 |
| **32 Parts:** | | | |
| 1–39, Vol. I | | 15.00 | [2] July 1, 1984 |
| 1–39, Vol. II | | 19.00 | [2] July 1, 1984 |
| 1–39, Vol. III | | 18.00 | [2] July 1, 1984 |
| 1–190 | (869–028–00122–0) | 42.00 | July 1, 1996 |
| 191–399 | (869–028–00123–8) | 50.00 | July 1, 1996 |
| 400–629 | (869–028–00124–6) | 34.00 | July 1, 1996 |
| 630–699 | (869–028–00125–4) | 14.00 | [5] July 1, 1991 |
| 700–799 | (869–028–00126–2) | 28.00 | July 1, 1996 |
| 800–End | (869–028–00127–1) | 28.00 | July 1, 1996 |
| **33 Parts:** | | | |
| 1–124 | (869–028–00128–9) | 26.00 | July 1, 1996 |
| 125–199 | (869–028–00129–7) | 35.00 | July 1, 1996 |
| 200–End | (869–028–00130–1) | 32.00 | July 1, 1996 |
| **34 Parts:** | | | |
| 1–299 | (869–028–00131–9) | 27.00 | July 1, 1996 |
| 300–399 | (869–028–00132–7) | 27.00 | July 1, 1996 |
| 400–End | (869–028–00133–5) | 46.00 | July 1, 1996 |
| **35** | (869–028–00134–3) | 15.00 | July 1, 1996 |
| **36 Parts** | | | |
| 1–199 | (869–028–00135–1) | 20.00 | July 1, 1996 |
| 200–End | (869–028–00136–0) | 48.00 | July 1, 1996 |
| **37** | (869–028–00137–8) | 24.00 | July 1, 1996 |
| **38 Parts:** | | | |
| 0–17 | (869–028–00138–6) | 34.00 | July 1, 1996 |
| 18–End | (869–028–00139–4) | 38.00 | July 1, 1996 |
| **39** | (869–028–00140–8) | 23.00 | July 1, 1996 |
| **40 Parts:** | | | |
| ●1–51 | (869–028–00141–6) | 50.00 | July 1, 1996 |
| ●52 | (869–028–00142–4) | 51.00 | July 1, 1996 |
| ●53–59 | (869–028–00143–2) | 14.00 | July 1, 1996 |
| 60 | (869-028-00144-1) | 47.00 | July 1, 1996 |
| ●61–71 | (869–028–00145–9) | 47.00 | July 1, 1996 |
| ●72–80 | (869–028–00146–7) | 34.00 | July 1, 1996 |
| ●81–85 | (869–028–00147–5) | 31.00 | July 1, 1996 |
| 86 | (869–028–00148–3) | 46.00 | July 1, 1996 |
| ●87-135 | (869–028–00149–1) | 35.00 | July 1, 1996 |
| ●136–149 | (869–028–00150–5) | 35.00 | July 1, 1996 |
| ●150–189 | (869–028–00151–3) | 33.00 | July 1, 1996 |
| ●190–259 | (869–028–00152–1) | 22.00 | July 1, 1996 |
| ●260–299 | (869–028–00153–0) | 53.00 | July 1, 1996 |
| ●300–399 | (869–028–00154–8) | 28.00 | July 1, 1996 |
| ●400–424 | (869–028–00155–6) | 33.00 | July 1, 1996 |
| ●425–699 | (869–028–00156–4) | 38.00 | July 1, 1996 |
| ●700–789 | (869–028–00157–2) | 33.00 | July 1, 1996 |
| ●790–End | (869–028–00158–7) | 19.00 | July 1, 1996 |
| **41 Chapters:** | | | |
| 1, 1–1 to 1–10 | | 13.00 | [3] July 1, 1984 |
| 1, 1–11 to Appendix, 2 (2 Reserved) | | 13.00 | [3] July 1, 1984 |
| 3–6 | | 14.00 | [3] July 1, 1984 |
| 7 | | 6.00 | [3] July 1, 1984 |
| 8 | | 4.50 | [3] July 1, 1984 |
| 9 | | 13.00 | [3] July 1, 1984 |
| 10–17 | | 9.50 | [3] July 1, 1984 |
| 18, Vol. I, Parts 1–5 | | 13.00 | [3] July 1, 1984 |
| 18, Vol. II, Parts 6–19 | | 13.00 | [3] July 1, 1984 |
| 18, Vol. III, Parts 20–52 | | 13.00 | [3] July 1, 1984 |
| 19–100 | | 13.00 | [3] July 1, 1984 |
| 1–100 | (869–028–00159–9) | 12.00 | July 1, 1996 |
| 101 | (869–028–00160–2) | 36.00 | July 1, 1996 |
| 102–200 | (869–028–00161–1) | 17.00 | July 1, 1996 |
| 201–End | (869–028–00162–9) | 17.00 | July 1, 1996 |
| **42 Parts:** | | | |
| ●1–399 | (869–028–00163–7) | 32.00 | Oct. 1, 1996 |
| ●400–429 | (869–028–00164–5) | 34.00 | Oct. 1, 1996 |
| ●430–End | (869–028–00165–3) | 44.00 | Oct. 1, 1996 |
| **43 Parts:** | | | |
| ●1–999 | (869–028–00166–1) | 30.00 | Oct. 1, 1996 |
| ●1000–end | (869–028–00167–0) | 45.00 | Oct. 1, 1996 |
| **●44** | (869–028–00168–8) | 31.00 | Oct. 1, 1996 |
| **45 Parts:** | | | |
| ●1–199 | (869–028–00169–6) | 28.00 | Oct. 1, 1996 |
| ●200–499 | (869–028–00170–0) | 14.00 | [6] Oct. 1, 1995 |
| ●500–1199 | (869–028–00171–8) | 30.00 | Oct. 1, 1996 |
| ●1200–End | (869–028–00172–6) | 36.00 | Oct. 1, 1996 |
| **46 Parts:** | | | |
| ●1–40 | (869–028–00173–4) | 26.00 | Oct. 1, 1996 |
| ●41–69 | (869–028–00174–2) | 21.00 | Oct. 1, 1996 |
| ●70–89 | (869–028–00175–1) | 11.00 | Oct. 1, 1996 |
| ●90–139 | (869–028–00176–9) | 26.00 | Oct. 1, 1996 |
| ●140–155 | (869–028–00177–7) | 15.00 | Oct. 1, 1996 |
| ●156–165 | (869–028–00178–5) | 20.00 | Oct. 1, 1996 |
| ●166–199 | (869–028–00179–3) | 22.00 | Oct. 1, 1996 |
| ●200–499 | (869–028–00180–7) | 21.00 | Oct. 1, 1996 |
| ●500–End | (869–028–00181–5) | 17.00 | Oct. 1, 1996 |
| **47 Parts:** | | | |
| ●0–19 | (869–028–00182–3) | 35.00 | Oct. 1, 1996 |
| ●20–39 | (869–028–00183–1) | 26.00 | Oct. 1, 1996 |
| ●40–69 | (869–028–00184–0) | 18.00 | Oct. 1, 1996 |
| ●70–79 | (869–028–00185–8) | 33.00 | Oct. 1, 1996 |
| ●80–End | (869–028–00186–6) | 39.00 | Oct. 1, 1996 |
| **48 Chapters:** | | | |
| ●1 (Parts 1–51) | (869–028–00187–4) | 45.00 | Oct. 1, 1996 |
| ●1 (Parts 52–99) | (869–028–00188–2) | 29.00 | Oct. 1, 1996 |
| ●2 (Parts 201–251) | (869–028–00189–1) | 22.00 | Oct. 1, 1996 |
| ●2 (Parts 252–299) | (869–028–00190–4) | 16.00 | Oct. 1, 1996 |
| ●3–6 | (869–028–00191–2) | 30.00 | Oct. 1, 1996 |
| ●7–14 | (869–028–00192–1) | 29.00 | Oct. 1, 1996 |
| ●15–28 | (869–028–00193–9) | 38.00 | Oct. 1, 1996 |
| ●29–End | (869–028–00194–7) | 25.00 | Oct. 1, 1996 |
| **49 Parts:** | | | |
| ●1–99 | (869–028–00195–5) | 32.00 | Oct. 1, 1996 |
| ●100–185 | (869–028–00196–3) | 50.00 | Oct. 1, 1996 |
| ●186–199 | (869–028–00197–1) | 14.00 | Oct. 1, 1996 |
| ●200–399 | (869–028–00198–0) | 39.00 | Oct. 1, 1996 |
| ●400–999 | (869–028–00199–8) | 49.00 | Oct. 1, 1996 |
| ●1000–1199 | (869–028–00200–5) | 23.00 | Oct. 1, 1996 |
| ●1200–End | (869–028–00201–3) | 15.00 | Oct. 1, 1996 |
| **50 Parts:** | | | |
| ●1–199 | (869–028–00202–1) | 34.00 | Oct. 1, 1996 |

| Title | Stock Number | Price | Revision Date |
|---|---|---|---|
| ●200–599 | (869–028–00203–0) | 22.00 | Oct. 1, 1996 |
| ●600–End | (869–028–00204–8) | 26.00 | Oct. 1, 1996 |
| CFR Index and Findings Aids | (869–028–00051–7) | 35.00 | Jan. 1, 1996 |
| Complete 1997 CFR set | | 951.00 | 1997 |
| Microfiche CFR Edition: | | | |
| Subscription (mailed as issued) | | 247.00 | 1997 |
| Individual copies | | 1.00 | 1997 |
| Complete set (one-time mailing) | | 264.00 | 1996 |
| Complete set (one-time mailing) | | 264.00 | 1995 |

[1] Because Title 3 is an annual compilation, this volume and all previous volumes should be retained as a permanent reference source.

[2] The July 1, 1985 edition of 32 CFR Parts 1–189 contains a note only for Parts 1–39 inclusive. For the full text of the Defense Acquisition Regulations in Parts 1–39, consult the three CFR volumes issued as of July 1, 1984, containing those parts.

[3] The July 1, 1985 edition of 41 CFR Chapters 1–100 contains a note only for Chapters 1 to 49 inclusive. For the full text of procurement regulations in Chapters 1 to 49, consult the eleven CFR volumes issued as of July 1, 1984 containing those chapters.

[4] No amendments to this volume were promulgated during the period Apr. 1, 1990 to Mar. 31, 1996. The CFR volume issued April 1, 1990, should be retained.

[5] No amendments to this volume were promulgated during the period July 1, 1991 to June 30, 1996. The CFR volume issued July 1, 1991, should be retained.

[6] No amendments were promulgated during the period October 1, 1995 to September 30, 1996. The CFR volume issued October 1, 1995 should be retained.