9–6–96
Vol. 61 No. 174
Pages 47019–47408

federal register

Friday
September 6, 1996

Briefings on How To Use the Federal Register
For information on briefings in New York, NY and Washington, DC, see announcement on the inside cover of this issue.

FEDERAL REGISTER Published daily, Monday through Friday, (not published on Saturdays, Sundays, or on official holidays), by the Office of the Federal Register, National Archives and Records Administration, Washington, DC 20408, under the Federal Register Act (49 Stat. 500, as amended; 44 U.S.C. Ch. 15) and the regulations of the Administrative Committee of the Federal Register (1 CFR Ch. I). Distribution is made only by the Superintendent of Documents, U.S. Government Printing Office, Washington, DC 20402.

The Federal Register provides a uniform system for making available to the public regulations and legal notices issued by Federal agencies. These include Presidential proclamations and Executive Orders and Federal agency documents having general applicability and legal effect, documents required to be published by act of Congress and other Federal agency documents of public interest. Documents are on file for public inspection in the Office of the Federal Register the day before they are published, unless earlier filing is requested by the issuing agency.

The seal of the National Archives and Records Administration authenticates this issue of the Federal Register as the official serial publication established under the Federal Register Act. 44 U.S.C. 1507 provides that the contents of the Federal Register shall be judicially noticed.

The Federal Register is published in paper, 24x microfiche and as an online database through *GPO Access*, a service of the U.S. Government Printing Office. The online edition of the Federal Register on *GPO Access* is issued under the authority of the Administrative Committee of the Federal Register as the official legal equivalent of the paper and microfiche editions. The online database is updated by 6 a.m. each day the Federal Register is published. The database includes both text and graphics from Volume 59, Number 1 (January 2, 1994) forward. Free public access is available on a Wide Area Information Server (WAIS) through the Internet and via asynchronous dial-in. Internet users can access the database by using the World Wide Web; the Superintendent of Documents home page address is http://www.access.gpo.gov/su__docs/, by using local WAIS client software, or by telnet to swais.access.gpo.gov, then login as guest, (no password required). Dial-in users should use communications software and modem to call (202) 512–1661; type swais, then login as guest (no password required). For general information about *GPO Access*, contact the *GPO Access* User Support Team by sending Internet e-mail to gpoaccess@gpo.gov; by faxing to (202) 512–1262; or by calling (202) 512–1530 between 7 a.m. and 5 p.m. Eastern time, Monday–Friday, except for Federal holidays.

The annual subscription price for the Federal Register paper edition is $494, or $544 for a combined Federal Register, Federal Register Index and List of CFR Sections Affected (LSA) subscription; the microfiche edition of the Federal Register including the Federal Register Index and LSA is $433. Six month subscriptions are available for one-half the annual rate. The charge for individual copies in paper form is $8.00 for each issue, or $8.00 for each group of pages as actually bound; or $1.50 for each issue in microfiche form. All prices include regular domestic postage and handling. International customers please add 25% for foreign handling. Remit check or money order, made payable to the Superintendent of Documents, or charge to your GPO Deposit Account, VISA or MasterCard. Mail to: New Orders, Superintendent of Documents, P.O. Box 371954, Pittsburgh, PA 15250–7954.

There are no restrictions on the republication of material appearing in the Federal Register.

How To Cite This Publication: Use the volume number and the page number. Example: 61 FR 12345.

SUBSCRIPTIONS AND COPIES

PUBLIC	
Subscriptions:	
Paper or fiche	202–512–1800
Assistance with public subscriptions	512–1806
General online information	202–512–1530
Single copies/back copies:	
Paper or fiche	512–1800
Assistance with public single copies	512–1803
FEDERAL AGENCIES	
Subscriptions:	
Paper or fiche	523–5243
Assistance with Federal agency subscriptions	523–5243

For other telephone numbers, see the Reader Aids section at the end of this issue.

FEDERAL REGISTER WORKSHOP

THE FEDERAL REGISTER: WHAT IT IS AND HOW TO USE IT

FOR: Any person who uses the Federal Register and Code of Federal Regulations.

WHO: Sponsored by the Office of the Federal Register.

WHAT: Free public briefings (approximately 3 hours) to present:

1. The regulatory process, with a focus on the Federal Register system and the public's role in the development of regulations.
2. The relationship between the Federal Register and Code of Federal Regulations.
3. The important elements of typical Federal Register documents.
4. An introduction to the finding aids of the FR/CFR system.

WHY: To provide the public with access to information necessary to research Federal agency regulations which directly affect them. There will be no discussion of specific agency regulations.

NEW YORK, NY

WHEN: September 17, 1996 at 9:00 am.
WHERE: National Archives—Northwest Region
201 Varick Street, 12th Floor
New York, NY
RESERVATIONS: 800–688–9889
(Federal Information Center)

WASHINGTON, DC

WHEN: September 24, 1996 at 9:00 am.
WHERE: Office of the Federal Register
Conference Room
800 North Capitol Street, NW.
Washington, DC
(3 blocks north of Union Station Metro)
RESERVATIONS: 202–523–4538

Printed on recycled paper containing 100% post consumer waste

Contents

Federal Register
Vol. 61, No. 174
Friday, September 6, 1996

Agricultural Marketing Service
RULES
Milk marketing orders:
Black Hills, SD, 47038–47039
PROPOSED RULES
Fluid milk promotion order, 47093–47095
Milk marketing orders:
Eastern Colorado, 47092–47093

Agriculture Department
See Agricultural Marketing Service
RULES
Highly erodible land and wetland conservation, 47019–47038
NOTICES
Agency information collection activities:
Submission for OMB review; comment request, 47110–47111

Alcohol, Tobacco and Firearms Bureau
PROPOSED RULES
Alcohol, tobacco, and other excise taxes:
Firearms; categories of persons prohibited from receiving firearms; definitions, 47095–47099

Blind or Severely Disabled, Committee for Purchase From People Who Are
See Committee for Purchase From People Who Are Blind or Severely Disabled

Centers for Disease Control and Prevention
NOTICES
Meetings:
Addressing immunization information systems barriers, 47131

Civil Rights Commission
NOTICES
Meetings; State advisory committees:
Indiana, 47113

Coast Guard
RULES
Merchant marine officers and seamen:
Examination methods modernization, 47060–47064
Ports and waterways safety:
Hempstead Harbor, NY, 47054–47055

Commerce Department
See National Oceanic and Atmospheric Administration

Committee for Purchase From People Who Are Blind or Severely Disabled
NOTICES
Procurement list; additions and deletions, 47111–47113

Comptroller of the Currency
RULES
Risk-based capital:
Market risk, 47358–47378

Defense Department
See Defense Information Systems Agency
PROPOSED RULES
Acquisition regulations:
Certification requirements for contractors and offerors not specifically imposed by statute; removal, 47101–47105
Procurement integrity, 47100–47101
Federal Acquisition Regulation (FAR):
Procurement integrity, 47390–47396
Special simplified procedures application to commercial items, 47384–47390

Defense Information Systems Agency
NOTICES
Senior Executive Service:
Performance Review Board; membership, 47114

Education Department
PROPOSED RULES
Postsecondary education:
Federal family education loan program, 47398–47401

Employment and Training Administration
NOTICES
Adjustment assistance:
AVX Corp., 47179
Carborumdun Co., 47179
Distribution & Auto Service, Inc., 47179–47180
Hickory Hills Industries, Inc., 47180
J&W Garment Factory, 47180
J.E. Morgan Knitting, Inc., 47180–47181
Kentucky Apparel LLP, 47181
Klear-Knit, Inc., 47181
Klear-Knit of Statesville, Inc., et al., 47181
Rivera Manufacturing et al., 47181–47182
Savannah Manufacturing Corp. et al., 47182
Agency information collection activities:
Proposed collection; comment request, 47182–47189
NAFTA transitional adjustment assistance:
Goodyear Tire & Rubber Co., 47190

Employment Standards Administration
NOTICES
Minimum wages for Federal and federally-assisted construction; general wage determination decisions, 47190–47192

Energy Department
See Energy Efficiency and Renewable Energy Office
See Federal Energy Regulatory Commission
NOTICES
Grants and cooperative agreements; availability, etc.:
Environmental restoration and waste management program; applied research and development; correction, 47114–47115

Energy Efficiency and Renewable Energy Office
NOTICES
Consumer product test procedures; waiver petitions:
General Electric Appliances, 47115–47117

Environmental Protection Agency
RULES
Acquisition regulations:
Conduct of surveys, major systems acquisitions, etc., 47064–47065
Source selection process, 47065–47068
Air quality implementation plans; approval and promulgation; various States; air quality planning purposes; designation of areas:
Wyoming; correction, 47058–47060
Air quality implementation plans; approval and promulgation; various States:
Tennessee, 47055–47057
Tennessee; withdrawn, 47057–47058
Washington; withdrawn, 47055
Superfund program:
National oil and hazardous substances contingency plan—
National priorities list update, 47060
PROPOSED RULES
Air quality implementation plans; approval and promulgation; various States; air quality planning purposes; designation of areas:
Wyoming; correction, 47100
Air quality implementation plans; approval and promulgation; various States:
Tennessee, 47099–47100
NOTICES
Environmental statements; availability, etc.:
Agency statements—
Comment availability, 47125–47126
Weekly receipts, 47124–47125
Meetings:
FIFRA Scientific Advisory Panel, 47126–47127

Federal Aviation Administration
RULES
Airworthiness directives:
Bell, 47041–47049
Pilatus Britten-Norman Ltd., 47049–47051
Textron Lycoming; correction, 47051
Class E airspace, 47051–47053
NOTICES
Meetings:
RTCA, Inc., 47231–47232
Passenger facility charges; applications, etc.:
Gillette-Campbell County Airport, WY, 47232
Long Island MacArthur Airport, NY, 47232–47233

Federal Communications Commission
RULES
Telecommunications Act of 1996; implementation:
Common carrier services—
Local competition provisions, 47284–47332

Federal Deposit Insurance Corporation
RULES
Risk-based capital:
Market risk, 47358–47378
NOTICES
Meetings; Sunshine Act, 47127

Federal Energy Regulatory Commission
NOTICES
Electric rate and corporate regulation filings:
Carolina Power & Light Co. et al., 47120–47122
Environmental statements; availability, etc.:
Madison Paper Industries, 47122
Natural gas certificate filings:
Natural Gas Pipeline Co. of America et al., 47122–47124
Applications, hearings, determinations, etc.:
Alabama-Tennessee Natural Gas Co.; correction, 47420
Colorado Interstate Gas Co., 47117
Columbia Gas Transmission Corp., 47117
Eastern Shore Natural Gas Co., 47117–47118
Koch Gateway Pipeline Co., 47118
Northern Natural Gas Co., 47118–47119
Pacific Gas & Electric Co., 47119
Pacific Gas Transmission Co., 47119
S.D. Warren Co., 47119
Texas Eastern Transmission Corp., 47120

Federal Reserve System
RULES
Risk-based capital:
Market risk, 47358–47378
PROPOSED RULES
Bank holding companies and change in bank control (Regulation Y):
Miscellaneous amendments, 47242–47282
NOTICES
Banks and bank holding companies:
Change in bank control, 47127–47128
Corporations operating as subsidiaries, 47128
Formations, acquisitions, and mergers, 47128
Permissible nonbanking activities, 47128–47129
Federal Open Market Committee:
Domestic policy directives, 47129–47130
Meetings; Sunshine Act, 47130

Federal Retirement Thrift Investment Board
NOTICES
Meetings; Sunshine Act, 47130–47131

Fish and Wildlife Service
PROPOSED RULES
Endangered and threatened species:
Suisun thistle, etc. (two San Francisco Bay California tidal marsh plants), 47105–47106
NOTICES
Endangered and threatened species permit applications, 47171

General Accounting Office
PROPOSED RULES
Americans with Disabilities Act; implementation:
Personnel relations and services
Correction, 47420

General Services Administration
PROPOSED RULES
Federal Acquisition Regulation (FAR):
Procurement integrity, 47390–47396
Special simplified procedures application to commercial items, 47384–47390

Health and Human Services Department
See Centers for Disease Control and Prevention
See Health Care Financing Administration
See National Institutes of Health

Health Care Financing Administration
NOTICES
Agency information collection activities:
Proposed collection; comment request, 47131
Submission for OMB review; comment request, 47131–47132

Housing and Urban Development Department
RULES
Community facilities:
Church Arson Prevention Act of 1996; implementation—
Loan guarantee recovery fund, 47404–47408
Low income housing:
Section 8 housing; tenancy termination for criminal activity, 47380–47382
NOTICES
Grants and cooperative agreements; availability, etc.:
Facilities to assist homeless—
Excess and surplus Federal property, 47133–47171

Immigration and Naturalization Service
RULES
Immigration:
Aliens—
Lawfully present in United States; term definition, 47039–47041

Interior Department
See Fish and Wildlife Service
See Land Management Bureau
See Minerals Management Service
See National Park Service

Internal Revenue Service
NOTICES
Agency information collection activities:
Proposed collection; comment request, 47234–47235
Organization, functions, and authority delegations:
Regional and District Counsels et al., 47235–47236

International Development Cooperation Agency
See Overseas Private Investment Corporation

Justice Department
See Immigration and Naturalization Service

Labor Department
See Employment and Training Administration
See Employment Standards Administration
See Mine Safety and Health Administration
See Occupational Safety and Health Administration
See Pension and Welfare Benefits Administration
NOTICES
Agency information collection activities:
Submission for OMB review; comment request, 47178–47179

Land Management Bureau
NOTICES
Meetings:
Resource advisory councils—
Butte District, 47172
Northwest Colorado, 47171–47172
Motor vehicle use restrictions:
Montana, 47172
Survey plat filings:
Wyoming, 47172–47173

Minerals Management Service
NOTICES
Agency information collection activities:
Proposed collection; comment request, 47173–47174
Submission for OMB review; comment request, 47174

Mine Safety and Health Administration
NOTICES
Safety standard petitions:
Old Ben Coal Co. et al., 47192–47195

National Aeronautics and Space Administration
RULES
Acquisition regulations:
FAR supplement rewrite; Federal regulatory reform, 47068–47082
Government property reporting by contractors, 47082–47086
PROPOSED RULES
Federal Acquisition Regulation (FAR):
Procurement integrity, 47390–47396
Special simplified procedures application to commercial items, 47384–47390

National Highway Traffic Safety Administration
RULES
Motor vehicle safety standards:
Fuel system integrity—
Compressed natural gas fuel containers, 47086–47089

National Institutes of Health
NOTICES
Grants and cooperative agreements; availability, etc.:
Atherosclerosis and LCAT deficiency treatment; therapeutic modalities development to raise plasma concentrations of LCAT, 47132
Meetings:
National Library of Medicine, 47132

National Oceanic and Atmospheric Administration
RULES
Fishery conservation and management:
Gulf of Alaska groundfish, 47090–47091
West Coast States and Western Pacific fisheries—
Rockfish, 47089–47090
PROPOSED RULES
Fishery conservation and management:
Bering Sea and Aleutian Islands groundfish, 47108–47109
Summer flounder, scup, and Black Sea bass, 47106–47108
NOTICES
Permits:
Endangered and threatened species, 47113–47114

National Park Service
NOTICES
Environmental statements; availability, etc.:
Pictured Rocks National Lakeshore, MI, 47174–47176
Meetings:
Cape Cod National Seashore Advisory Commission, 47176–47177
Native American human remains and associated funerary objects:
Buffalo Bill Historical Center, WY; Medicine Pipe Thunder Bundle, 47177

Nuclear Regulatory Commission
NOTICES
Applications, hearings, determinations, etc.:
Commonwealth Edison Co., 47214–47215

Occupational Safety and Health Administration
NOTICES
State plans; standards approval, etc.:
Vermont, 47195

Overseas Private Investment Corporation
NOTICES
Meetings; Sunshine Act, 47177–47178

Peace Corps
NOTICES
Agency information collection activities:
Proposed collection; comment request, 47215–47216
Submission for OMB review; comment request, 47216

Pension and Welfare Benefits Administration
NOTICES
Employee benefit plans; prohibited transaction exemptions:
Chase Manhattan Bank et al., 47195–47205
Equitable Life Assurance Society of United States et al., 47205–47214

Presidential Advisory Committee on Gulf War Veterans' Illnesses
NOTICES
Meetings, 47216–47217

Public Health Service
See Centers for Disease Control and Prevention
See National Institutes of Health

Securities and Exchange Commission
NOTICES
Self-regulatory organizations; proposed rule changes:
Municipal Securities Rulemaking Board, 47224–47227
Philadelphia Depository Trust Co., 47227–47229
Stock Clearing Corp. of Philadelphia, 47229–47231
Applications, hearings, determinations, etc.:
Lincoln National Life Insurance Co. et al., 47217–47219
Public utility holding company filings, 47219–47221
Travelers Insurance Co. et al., 47221–47224

State Department
NOTICES
Meetings:
Fine Arts Committee, 47231
Shipping Coordinating Committee, 47231

Surface Transportation Board
NOTICES
Railroad operation, acquisition, construction, etc.:
Chicago Rail Link, L.L.C., et al., 47233
CSX Transportation, Inc., 47233–47234

Thrift Supervision Office
NOTICES
Agency information collection activities:
Submission for OMB review; comment request, 47236

Transportation Department
See Coast Guard
See Federal Aviation Administration
See National Highway Traffic Safety Administration
See Surface Transportation Board

Treasury Department
See Alcohol, Tobacco and Firearms Bureau
See Comptroller of the Currency
See Internal Revenue Service
See Thrift Supervision Office

United States Institute of Peace
NOTICES
Meetings; Sunshine Act, 47236

Veterans Affairs Department
NOTICES
Agency information collection activities:
Proposed collection; comment request, 47236–47238
Submission for OMB review; comment request, 47238–47239
Meetings:
Prosthetics and Special-Disabilities Programs Advisory Committee, 47239

Separate Parts In This Issue

Part II
Federal Reserve System, 47242–47282

Part III
Federal Communications Commission, 47284–47355

Part IV
Treasury Department, Comptroller of the Currency, Thrift Supervision Office; Federal Deposit Insurance Corporation; Federal Reserve System, 47358–47378

Part V
Housing and Urban Development Department, 47380–47382

Part VI
Department of Defense; General Services Administration; National Aeronautics and Space Administration, 47384–47396

Part VII
Education Department, 47398–47401

Part VIII
Housing and Urban Development Department, 47404–47408

Reader Aids
Additional information, including a list of public laws, telephone numbers, reminders, and finding aids, appears in the Reader Aids section at the end of this issue.

Electronic Bulletin Board
Free Electronic Bulletin Board service for Public Law numbers, Federal Register finding aids, and a list of documents on public inspection is available on 202–275–1538 or 275–0920.

CFR PARTS AFFECTED IN THIS ISSUE

A cumulative list of the parts affected this month can be found in the Reader Aids section at the end of this issue.

4 CFR
Proposed Rules:
7 47240

7 CFR
12 47019
1075 47038
Proposed Rules:
1137 47092
1160 47093

8 CFR
103 47039

12 CFR
3 47358
208 47358
225 47358
325 47358
Proposed Rules:
225 47242

14 CFR
39 (5 documents) 47041, 47046, 47047, 47049, 47051
71 (3 documents) 47051, 47052, 47053

24 CFR
247 47380
573 47404
880 47380
884 47380

27 CFR
Proposed Rules:
178 47095

33 CFR
165 47054

34 CFR
Proposed Rules:
682 47398

40 CFR
52 (5 documents) 47055, 47057, 57058
81 47058
300 47060
Proposed Rules:
52 (2 documents) 47099, 47100
81 47100

46 CFR
10 47060
12 47060

47 CFR
51 47284
52 47284

48 CFR
1506 47064
1515 47065
1534 47064
1536 47064
1542 47064
1545 47064
1552 (2 documents) 47064, 47065
1807 47068
1808 47068
1809 47068
1810 47068
1811 47068
1812 47068
1814 47068
1828 47068
1835 47068
1842 47068
1845 47082
1852 (2 documents) 47068, 47082
1853 47082
1871 47068
Proposed Rules:
1 47384
3 47384
4 47384
5 47384
9 47384
11 47384
12 (2 documents) 47384, 47390
13 47384
14 47384
15 47384
19 47384
33 47384
37 47384
43 47384
52 (2 documents) 47384, 47390
53 47384
203 47100
212 47101
215 47100
219 47101
225 47101
226 47101
227 47101
233 47101
252 (2 documents) 47100, 47101

49 CFR
571 47086

50 CFR
660 47089
679 47089
Proposed Rules:
17 47105
648 47106
679 47108

Rules and Regulations

Federal Register
Vol. 61, No. 174
Friday, September 6, 1996

This section of the FEDERAL REGISTER contains regulatory documents having general applicability and legal effect, most of which are keyed to and codified in the Code of Federal Regulations, which is published under 50 titles pursuant to 44 U.S.C. 1510.

The Code of Federal Regulations is sold by the Superintendent of Documents. Prices of new books are listed in the first FEDERAL REGISTER issue of each week.

DEPARTMENT OF AGRICULTURE

Office of the Secretary

7 CFR Part 12

RIN 0578–AA17

Highly Erodible Land and Wetland Conservation

AGENCY: Office of the Secretary, USDA.

ACTION: Interim final rule with request for comments.

SUMMARY: The United States Department of Agriculture (USDA) is issuing an interim final rule for the Highly Erodible Land and Wetland Conservation provisions of the Food Security Act of 1985, as amended. This interim final rule incorporates specific changes required by the Federal Agriculture Improvement and Reform Act of 1996 and makes other changes to improve the administration of these provisions. USDA is seeking comments from the public which will be considered prior to issuing a final rule.

DATES: *Effective Dates:* September 6, 1996.

Comments must be received by November 5, 1996.

ADDRESSES: All comments concerning this interim final rule should be addressed to Lloyd E. Wright, Director, Conservation Ecosystems Assistance Division, Natural Resources Conservation service, P.O. Box 2890, Washington, D.C. 20013–2890. Attention: HELWC. Fax: 202–720–1838. This rule may also be accessed, and comments submitted, via Internet. Users can access the NRCS Federal Register homepage and submit comments at http:/astro.itc.nrcs.usda.gov:6500.

FOR FURTHER INFORMATION CONTACT: Sandra N. Penn, Conservation Ecosystems Assistance Division, Natural Resources Conservation Service, 202–720–1845.

SUPPLEMENTARY INFORMATION:

Executive Order 12866

This rule has been determined to be significant and was reviewed by the Office of Management and Budget (OMB) under Executive Order 12866. Pursuant to § 6(a)(3) of Executive Order 12866, CCC and NRCS have conducted an economic analysis of the potential impacts associated with this interim final rule. The economic analysis concluded that the past ten years of experience in implementing these provisions demonstrates that the provisions are an effective incentive to implementing conservation practices. Changes in the 1985 Act and the implementing regulations will help to increase that incentive by making compliance achievable by more producers, providing more liberal technical assistance, and increasing flexibility in farm operations that deterred some producers from participation in USDA programs in the past. A copy of this cost-benefit analysis is available upon request from Sandra N. Penn, Conservation Ecosystems Assistance Division, Natural Resources Conservation Service, P.O. Box 1890, Washington, D.C. 20013–1890.

Regulatory Flexibility Act

The Regulatory Flexibility Act is not applicable to this rule because USDA is not required by 5 U.S.C. 533 or any other provisions of law to publish a notice of proposed rulemaking with respect to the subject matter of this rule.

Environmental Evaluation

It has been determined through an environmental assessment that the issuance of this interim final rule will not have a significant impact upon the human environment. Copies of the environmental assessment may be obtained from Sandra N. Penn, Conservation Ecosystems Assistance Division, Natural Resources Conservation Service, P.O. Box 2890, Washington, D.C. 20013–2890.

Paperwork Reduction Act

No substantive changes have been made in this interim final rule that affect the recordkeeping requirements and estimated burdens previously reviewed and approved under OMB control number 0560–0004.

Executive Order 12788

This interim final rule has been reviewed in accordance with Executive Order 12778. The provisions of this interim final rule are not retroactive except for § 12.5(b)(4)–(8) in relation to certain actions or determinations that occurred after December 23, 1985, relative to the conversion of wetlands or the production of an agricultural commodity upon a converted wetland. Furthermore, the provisions of this final interim rule preempt State and local laws to the extent such laws are inconsistent with this interim final rule. Before an action may be brought in a Federal court of competent jurisdiction, the administrative appeal rights afforded persons at CFR parts 11,614,780 and 1900 Subpart B of this title, as appropriate, must be exercised and exhausted.

Unfunded Mandates Reform Act of 1995

Pursuant to Title II of the unfunded Mandates Reform Act of 1995, Pub. L. 104–4, the effects of this rulemaking action on State, local, and tribal governments, and the public have been assessed. This action does not compel the expenditure of $100 million or more by any State, local, or tribal governments, or anyone in the private sector; therefore a statement under § 202 of the Unfunded Mandates Reform Act of 1995 is not required.

Discussion of Provisions

Title XII of the Food Security Act of 1985, as amended (the 1985 Act), encourages participants in United States Department of Agriculture (USDA) programs to adopt land management measures by linking eligibility for USDA program benefits to farming practices on highly erodible land and converted wetlands. In particular, the highly erodible land provisions (HEL) of the 1985 Act provide that after December 23, 1985, a program participant is ineligible for certain USDA program benefits for the production of an agricultural commodity on a field in which highly erodible land is predominant. Additionally, the wetland conservation (WC) provisions of the 1985 Act provide that after December 23, 1985, a program participant is ineligible for certain USDA program benefits for the production of an agricultural commodity on a converted

wetland, or after November 28, 1990, for the conversion of a wetland that makes the production of an agriculture commodity possible. The 1985 Act, however, affords relief to program participants who meet certain conditions identified under the 1985 Act by exempting such actions from the ineligibility provisions.

The USDA issued a final rule implementing the HEL and WC provisions of the 1985 Act on September 17, 1987. These regulations, found at 7 CFR part 12, provided the terms of program ineligibility, described the several exemptions from ineligibility, outlined the responsibilities of the several USDA agencies involved in implementing the provisions, and generally established the framework for administration of the provisions.

The Food, Agriculture, Conservation, and Trade Act of 1990 (the 1990 Act), amended the 1985 Act and made some significant modifications to the HEL and WC conservation provisions. These statutory changes were incorporated into part 12 through amendments issued April 23, 1991, and May 23, 1991.

The implementing regulations mirror the 1985 Act's structure by listing the activities that will cause a person to lose program benefits, the program benefits that are at risk, and the conditions under which these activities can occur without losing program eligibility. The current regulations are divided into three subparts. Subpart A describes the terms of ineligibility, USDA programs encompassed by its terms, the list of exemptions from ineligibility, the agency responsibilities, and the appeal provisions for persons adversely affected by an agency determination. Subpart B describes in greater detail the technical aspects of the highly erodible land provisions, including the criteria for identification of highly erodible lands, criteria for highly erodible field determinations, and requirements for the development of conservation plans and conservation systems. Subpart C describes in greater detail the technical aspects of the wetland conservation provisions, including the criteria for determining a wetland, the criteria for determining a converted wetland, and the uses of wetlands and converted wetlands that can be made without losing program eligibility.

Since December 23, 1985, program participants have farmed in a more sustainable manner, resulting in more soil remaining on the field and more wetlands remaining available to wildlife and migratory fowl. Meeting the objectives of the HEL and WC provisions, however, has been difficult for some producers. Wherever possible, USDA helps individual program participants address their unique resources concerns in a manner that meets the requirements of the HEL and WC provisions. The Federal Agriculture Improvement and Reform Act (the 1996 Act), enacted April 4, 1996, made several modifications to the HEL and WC provisions which will increase USDA's ability to meet these individual situations in a more flexible manner.

The Federal Agriculture Improvement and Reform Act

The 1996 Act amendments to the HEL and WC provisions became effective 90 days after the date of enactment, *i.e.*, July 3, 1996. Accordingly, delaying implementation of this rule would be contrary to the public interest and it has been determined that this rule should, therefore, be effective when issued but subject to further review based on comments submitted in response to this interim final rule.

The 1996 Act made the following changes to the implementation of the HEL and WC provisions:

- Adds new programs to the list of USDA program benefits covered.
- Deletes some programs from the list of USDA program benefits covered.
- Under certain conditions, allows a person who is determined to be ineligible for USDA program benefits because of failure to apply a conservation system up to 1 year to implement the necessary practices without loss of benefits.
- Provides for expedited variances related to weather, pest, and disease problems and establishes a time period to render a decision on whether to grant those variances.
- Requires a measurement of soil erosion on a highly erodible field prior to the implementation of a conservation system, based on estimated average annual soil erosion rates.
- Provides for self-certification of compliance for HEL and authorizes the Natural Resources Conservation Service (NRCS) to exclude that person from status review on the basis of that certification of compliance.
- Provides for revision or modification of a conservation plan by a person if the same level of treatment is maintained.
- Permits a person to use, on a field-trial basis, conservation practices other than those currently approved if NRCS determines in advance that the practices have a reasonable likelihood of success.
- Provides for a review, and relief to a person, by the local county committee if applying a conservation system would cause the person undue economic hardship.
- Requires that an employee of USDA who notices a conservation compliance deficiency on a person's farm while providing technical assistance on other land inform the person of the deficiency and actions necessary to come into compliance, and allow up to 1 year for the person to fully implement corrective action before reporting the observation as a compliance violation.
- Requires that highly erodible land exiting the Conservation Reserve Program not be held to a higher conservation compliance standard than similar cropland in the same area.
- Permits a person to cease using farmed wetlands, or farmed-wetland pastures, as identified by NRCS, for cropping or forage production, and allows the lands to return to wetland conditions, and subsequently bring these lands back into agricultural production after any length of time without loss of eligibility for USDA program benefits, given certain conditions.
- Allows flexibility in determining the programs for which a person who violates wetland conservation provisions will become ineligible.
- Ensures that persons the right to request and appeal a certified wetland determination.
- Provides that a certified wetland delineation will remain in effect until the person requests a new determination and certification.
- Ensures that wetlands that were certified as prior-converted cropland will continue to be considered prior-converted cropland even if wetland characteristics return as a result of lack of maintenance of the land or other circumstances beyond the person's control provided the prior-converted cropland continues to be used for agricultural purposes.
- Requires USDA to identify on a regional basis which categories of activities constitute a minimal effect on wetland functions and values.
- Provides persons who convert a wetland greater flexibility to mitigate the loss of wetland functions and values through restoration, enhancement, or creation of wetlands.
- Allows the Farm Service Agency (FSA) to waive a person's ineligibility for benefits if FSA believes the person acted in good faith and without intent to violate the wetland provisions.
- Provides for a pilot program for wetland mitigation banking.
- Repeals the requirements for consultation with the Fish and Wildlife Service (FWS).

• Provides that benefits of affiliates of a business enterprise who violate HEL or WC provisions will be reduced in proportion to the interest held by the affiliate in the business enterprise.

• Defines ''agricultural lands'' for the purpose of implementing the January 6, 1994, interagency memorandum of agreement on Federal wetland delineations on agricultural lands.

Public Listing Forums

In April 1996, USDA held nine forums to provide opportunities for public comment in advance of this rulemaking action. These forums were held at Sacramento, California; Longmont, Colorado; Columbus, Georgia; Springfield, Illinois; Wyomissing, Pennsylvania; Sioux Falls, South Dakota; Abilene, Texas, Spokane, Washington; and, Washington, D.C. More than 850 people, including 206 speakers, attended these forums. In addition, USDA accepted written comments. The USDA considered the public comments provided at these forums in the preparation of this interim final rule. The documents relating to these forums are available for public inspection at Room 6029 South Building, USDA, 14th and Independence Ave. SW, Washington, D.C. The following discussion is a brief 3summary of how USDA responded to the issues generated by the comments:

USDA received seven comments related to the granting of variance for persons who fail to meet the highly erodible land conservation requirements. Section 12.5(a)(6)(ii) addresses procedures for granting variances for weather, pest, and disease problems, and the factors that NRCS will consider in granting those variances.

USDA received three comments related to procedures for determining whether a conservation system results in a substantial reduction in erosion. Section 12.23 addresses procedures for evaluating conservation systems for land with and without cropping history.

USDA received 25 comments related to policies regarding when a violation is in good faith. Sections 12.5(a)(5) and (b)(5) address procedures for determining when a violation is in good faith.

USDA received 16 comments related to procedures for conducting status reviews. Although procedures for conducting status reviews are not addressed in the rule, the NRCS will consider these comments in preparing its internal operating procedures.

USDA received 46 comments related to procedures on wetland mitigation; these included the suggestion that mitigation always be in the same watershed; that mitigation should place priority on restoration or enhancement rather than creation of wetlands; that mitigation should be flexible; and, that mitigation should meet the requirements of the WC provision. Section 12.5(b)(4) sets forth procedures to be used for wetland mitigation, and adds that the State Conservationist may determine that mitigation for certain types or classes of wetlands will not be considered because it is not possible to achieve equivalent replacement of wetland functions and values within a reasonable time frame. USDA received another 28 comments related to mitigation banking.

USDA received 68 comments related to certification of wetland determinations. Some commenters favored reviewing all wetland determinations and correcting errors; other commenters favored not reviewing existing wetland determinations. Some commenters suggested that landowners should be formally notified of the certification of wetland determinations. Some commenters suggested that NRCS should be the lead agency for wetland determinations. Section 12.30(c) describes the proposed approach to certification of wetland determinations. It also specifies that a certified wetland determination will remain valid and in effect until the person affected by the certification requests review of the certification by NRCS.

USDA received 17 comments related to the role of FWS in carrying out the wetland conservation provisions. Of these, four commenters expressed support for FWS involvement and eight commenters favored decreasing the role of the FWS. Five commenters made no specific recommendation. The 1996 Act removed the requirement for consultation with FWS, and that requirement has been removed from the rule. In addition, § 12.30 defines the role of the FWS in carrying out the wetland conservation provisions.

USDA received 36 comments related to prior-converted cropland issues and abandonment of wetlands. Of these, 19 commenters expressed support for the ''once a PC, always a PC'' change made by the 1996 Act; three commenters expressed concern over that change. Section 12.33 incorporates changes made by the 1996 Act amendments.

USDA received four comments stating that NRCS should withdraw from the Interagency Memorandum of Agreement on Wetlands (MOA) with FWS, Environmental Protection Agency (EPA), and the U.S. Army Corps of Engineers (Corps). This comment is outside the scope of this rule, but as discussed in greater detail below, NRCS is dedicated to continued coordination with the other Federal agencies with wetland responsibilities. Currently, the MOA provides a useful and available framework for this coordination.

Description of Amendments

As the summary of the forum comments indicates, the statutory changes affect provisions throughout 7 CFR part 12. Because of these numerous changes, USDA will republish part 12 in its entirety to help the public form opinions and offer comments. When USDA reviews the comments received from the public, those comments concerning new regulatory provisions will receive greater consideration.

In addition to revisions necessary to accommodate changes in the Act, USDA makes several changes to interpret, clarify, or specify procedures followed in the implementation for the HEL and WC provisions. USDA invites public comment on these changes.

Amendments to the HEL Provisions

USDA finds that the following regulatory changes will improve the quality of implementation of the HEL provisions of the 1985 Act:

• Section 12.5(a)(6)(ii) is amended to list factors that NRCS will consider when a landowner requests a variance related to weather, pest, or disease problems.

• Section 12.22(c) is added to clarify that when fields are combined, the part of the new field that was previously a highly erodible field shall continue to be subject to the highly erodible land requirements.

• Section 12.23(a) is amended to clarify that the adequacy of a conservation system will be evaluated according to whether it conforms to the NRCS field office technical guide in use at the time that the plan or system is developed or revised.

• Section 12.23(b) is added to clarify procedures to be used to evaluate the adequacy of conservation systems for achieving substantial reduction in soil erosion on land with and without cropping history.

• Section 12.23(c) is added to specify that conservation field trials included in a person's conservation plan must have prior approval by NRCS and must be documented in the person's conservation plan specifying the limited time period during which the field trial is in effect.

• Section 12.23(j) sets forth the factors to be considered by the FSA State Committee in determining whether to grant a person's request for relief based on undue economic

hardship in implementing a conservation system.

Amendments to the WC Provisions

USDA finds that the following changes will improve the implementation of the WC provisions of the 1985 Act (WC provisions):

Identification of wetland types: The WC provisions clearly limit the conversion of wetlands and the planting of an agricultural commodity on a converted wetland, yet the technical identification of when these provisions are triggered can prove complex. Even though the 1985 Act implicitly identifies three distinct land types (wetlands, converted wetlands, and non-wetlands), the inherent complexity of natural systems and the diversity of land management methods available to an agricultural producer require that greater sophistication be used in application of broad national standards to local conditions. Some areas of land have been planted to an agricultural commodity but still exhibit the characteristic of a natural wetland if cropping ceases for even a short period of time. Likewise, areas managed for hay or pasture can exhibit the characteristics of a natural wetland if the management of the area ceases. Some activities can permanently remove most of the water from an area without making the production of an agricultural commodity possible while natural events can make the production of an agricultural commodity possible without permanently removing water from an area.

Since 1987, USDA has identified in policy the threshold characteristics that define when: a wetland has been manipulated sufficiently to make the production of an agricultural commodity possible; a wetland is ''converted;'' conditions meet a particular exemption identified under the 1985 Act; and a producer has expanded the drainage system beyond what existed prior to December 23, 1985. The USDA is adding definitions to § 12.2 to state more precisely the variety of wetland types found in the agricultural landscape. Section 12.5 and §§ 12.30–12.33 are amended to describe how these wetland types relate to particular exemptions from ineligibility. In this manner, agricultural producers are provided the maximum flexibility to manage their lands in a manner that will not trigger the ineligibility provisions of the 1985 Act.

Coordination with other Federal agencies: Consistent with the intent expressed in the Manager's Report accompanying the 1996 Act amendments, the changes made in this rule ''do not supersede the wetland protection authorities and responsibilities of the Environmental Protection Agency [EPA] or the Corps of Engineers [the Corps] under Section 404 of the Clean Water Act.'' This rule is promulgated under the authority of the 1985 Act, as amended, and therefore does not affect the obligations of any person under other Federal statutes, or the legal authorities of any other Federal agency including, for example, EPA's authority to determine the geographic scope of Clean Water Act jurisdiction. Nonetheless, NRCS, the Corps, and EPA place a high priority on adopting procedures and policies that minimize duplication and inconsistencies between the wetland conservation provisions of the 1985 Act and the Clean Water Act section 404 programs. To help achieve these important policy objectives, on January 6, 1994, four Federal agencies with wetland responsibilities (USDA, EPA, the Department of the Interior, the Department of the Army) entered into a Memorandum of Agreement (MOA), regarding the delineation of wetlands for purposes of section 404 of the Clean Water Act and the WC provisions. This MOA provides a framework for continuing coordination between the Federal agencies regarding the administration of Federal wetland laws. Consistent with the objectives of the MOA, the NRCS will continue to coordinate with the other Federal agencies in the development of its policies and procedures related to the implementation of these regulations.

More specifically, the agencies will coordinate to develop policies and procedures for evaluating the accuracy of existing non-certified wetland determinations made by NRCS. The necessary first step in these procedures will be to make an assessment of the quality of previous determinations. After completing the quality assessment, in order to provide certainty for the agricultural community, the Federal agencies will complete the process of validating prior determinations in an expeditious manner.

It is also the goal of the agencies to minimize duplication and inconsistencies between the WC provisions and the Clean Water Act. The agencies will coordinate to develop policies and procedures to minimize duplication and inconsistencies between the WC provisions and the Clean Water Act programs regarding other issues; in particular, conversion for non-agricultural use, minimal effects determinations (including categorical minimal effects exemptions), mitigation determination, or other written agreements between persons and NRCS, the re-establishment of agriculture use on abandoned farmed wetlands and farmed-wetland pasture, conversions due to NRCS wetland determination errors, and drainage maintenance. As part of this effort, the Corps intends to develop a new Clean Water Act nationwide permit that addresses NRCS minimal effects determinations, NRCS mitigation requirements, and modify the existing nationwide permit that addresses voluntary wetland restoration (See 61 FR part VII (June 17, 1996)).

In the MOA, the agencies agreed to follow certain guidelines for delineating wetlands. The MOA agencies currently use the 1987 Corps of Engineers Wetland Delineation Manual (1987 Corps Manual) for delineating wetlands on areas where the native vegetation is intact (*i.e.*, non-agricultural lands) and use the National Food Security Act Manual, Third ed. (NFSAM), for delineating wetlands on areas where the native vegetation has been removed due to ongoing agricultural activities (*i.e.*, agricultural lands).

Copies of the NFSAM and the MOA are available from the NRCS, P.O. Box 2890, Washington, D.C., 20013. Copies of the 1987 Corps Manual are available from the National Technical Information Service (NTIS), 5285 Port Royal Road, Attn: Order Department, Springfield, Virginia, 22171. Copies of the Supplemental guidance issued by the Corps concerning use of the 1987 Manual (*i.e.*, the October 7, 1991, Questions and Answers, and the March 6, 1992, Clarification and Interpretation Memorandum) may be obtained by contacting the Regulatory Branch of the local Corps district, the EPA Wetlands Hotline at (800) 832–7828, or the Regulatory Branch of Corps headquarters (Office of the Chief of Engineers) at (202) 272–0199. NRCS will publish notice in the Federal Register concerning a change in the Federal wetland delineation criteria that may be used in implementation of the WC provisions.

This interim final rule, however, only applies to administration of Title XII of the 1985 Act. As discussed earlier, the four agencies have identified a need to expand and revise the MOA to assure consistency and fairness in the implementation of these acts. The current MOA will remain in effect until it is amended or rescinded by the four agencies.

A goal of the Administration's 1993 Wetlands Plan is to harmonize the WC provisions and the Clean Water Act to the extent practicable. These regulations are modified in several ways to further the President's Wetlands Plan. In

particular, § 12.5(b)(5) provides that when a person requests relief on the basis that an action was conducted in good faith, USDA may consider whether the person has a record of violating the wetland provisions of these regulations or other Federal, State, or local wetland provisions.

Additionally, § 12.6(e) is added to state that NRCS may accept the assistance of other Federal agencies to carry out the wetland responsibilities of these regulations. Sections 12.30(a) and (b) provide that NRCS will consult with FWS at the State level to develop a process for implementation of the WC provisions.

Section 12.30(c) describes the procedure for certification of wetland determinations and specifies that certified wetland determinations will meet current Federal mapping conventions.

A certified wetland determination will remain in effect unless the person affected by the certification requests a review under certain circumstances or the wetland characteristics are changed as a result of human activities.

Section 12.31(b)(3) is amended to provide that the determination of prevalence of hydrophytic vegetation will be made in accordance with the current Federal wetland delineation methodology in use at the time of the determination. This change assures that the four agencies will utilize consistent and up-to-date technical standards and criteria.

Summary of Rule Modifications

Based on the changes in the 1996 Act and the other considerations set forth above, the changes to 7 CFR part 12 adopted in this notice are as follows:

Subpart A

This interim final rule adds several new definitions to § 12.2. The Department of Agriculture Reorganization Act of 1994 abolished several agencies and established new agencies to assume Department responsibilities. Therefore, § 12.2 is amended to reflect the new agencies with responsibilities for implementation of these regulations.

Section 12.2: This interim final rule adds new definitions for ''conservation plan,'' ''conservation system,'' and ''field'' as stated in the statute. It also adds several new definitions related to types of wetlands and management actions related to wetlands that have previously only been identified in policy. Definitions for ''prior-converted cropland,'' ''farmed wetland,'' ''farmed-wetland pasture,'' and ''commenced-conversion wetland'' have been added. Other provisions of the rule have been amended, including § 12.5 and §§ 12.31–.33, to incorporate these new definitions where applicable.

The 1996 Act amendments provide that a person who converts a wetland may remain eligible for USDA program benefits if the loss of wetland functions and values are mitigated through the restoration, enhancement, or creation of a wetland. Therefore, definitions for ''creation'', ''enhancement'', and ''restoration'', have been added to clarify this new flexibility.

Section 12.3: This interim final rule applies to all actions taken after July 3, 1996, and to determinations made after, or pending on, July 3, 1996, the date on which the HEL and WC statutory amendments become effective. This section is amended to reflect the passage of the 1996 Act and the scope of these new provisions.

Section 12.4: Section 12.4 describes the actions that will cause a person to lose eligibility for USDA program benefits and the program benefits that are subject to reduction or loss. The 1996 Act treats HEL and WC differently regarding the programs encompassed by each provision and the extent of the sanctions if the provisions are violated. Section 12.4 deletes applicability to some programs, such as crop insurance and obsolete programs. A person who violates the WC provisions may lose all or only a portion of certain USDA benefits, but a person who violates HEL could lose all of of these same benefits and additional program benefits. Sections 12.4(c) is amended to include an interpretation of which crop year's benefits are affected by a violation decision, and sets forth the factors that FSA will consider in determining the extent of benefits to be lost based on the seriousness of the violation.

Section 12.5: The 1996 Act amendments modify the provisions of § 12.5 regarding the exemptions from ineligibility for USDA program benefits. Section 12.5(a) addresses the exemptions that apply to HEL and § 12.5(b) addresses the exemptions that apply to WC.

Section 12.5(a)(5) specifies that HEL violations that are determined to have been made in good-faith are eligible for graduated sanctions if they were on land that was converted from native vegetation, *i.e.*, rangeland or woodland, to crop production after December 23, 1985. For good faith violations on land that was converted from native vegetation, *i.e.*, rangeland or woodland, to crop production before December 23, 1985, the person will be allowed up to one year to correct the problem before being found ineligible. After one year, if the problem is not corrected, the ineligibility provisions of § 12.4 will apply. Section 12.5(a)(6) grants an automatic variance if within 30 days NRCS fails to respond to a persons request for a variance because of weather, pest, or disease. It describes criteria that NRCS will consider when determining whether to grant a variance for a natural disaster such as weather, pest, or disease. NRCS is especially soliciting comments on how these criteria may be specified to ensure that variances are granted where appropriate.

Under § 12.5(b), the exemptions from ineligibility relative to wetland conservation, there exists a new exemption for land that was certified as having been converted prior to December 23, 1985, (prior-converted croplands), but had returned to wetland characteristics after that date. This exemption provides that if certain requirements are met, a prior-converted cropland will not be considered abandoned for purposes of implementation of these regulations. Likewise, there exists another new exemption for areas that NRCS determined were manipulated but were not completely converted prior to December 23, 1985, (farmed wetlands and farmed-wetland pastures), but may revert to wetland status through a voluntary restoration, enhancement, or creation action. This exemption provides that if certain requirements are met, the area will not be considered abandoned for purposes of implementation of these regulations.

These exemptions do not address how the Corps may treat these wetland types for purposes of section 404 of the Clean Water Act. The Corps has a notice in 61 FR part VII (June 17, 1996) to issue, reissue, and modify the nationwide permits for section 404 of the Clean Water Act that addresses these issues.

The 1996 Act provides that certain wetland conversion activities that were conducted pursuant to a permit issued under section 404 of the Clean Water Act may be exempt from ineligibility under the WC provisions, if the conversion activity was adequately mitigated for purposes of these provisions. This rule provides that a person who received an individual permit under section 404 of the Clean Water Act after December 23, 1985, and met certain sequencing requirements, is exempt from the ineligibility provisions of these regulations.

This rule, however, provides that a person whose conversion activity is encompassed by a nationwide or regional general permit issued pursuant to section 404 of the Clean Water Act

may not be exempt under these regulations. USDA will evaluate whether any mitigation was required, and whether the wetland functions and values lost by the conversion activity were adequately replaced before USDA decides whether the conversion activity is exempt from ineligibility under these regulations.

The regulations that existed prior to this interim final rule described a detailed procedure by which a person could receive a commenced conversion determination from FSA. Persons who believed that they qualified for such a determination had to request one from FSA by September 19, 1988. The purpose of the determination was to minimize any unnecessary economic hardship to someone who had incurred substantial financial obligations related to the conversion of a wetland prior to December 23, 1985, but had not actually converted the wetland by that date. Any person who received a commenced-conversion wetland determination had to complete the conversion activity by January 1, 1995, to retain the exemption status. Because the commenced conversion determination had to be received by 1988 and the conversion had to be completed by the end of 1994, the references in the rule related to the process to obtain a determination have been removed. If a person completed conversion activity by January 1, 1995, the land will qualify for the same exemptions from ineligibility as prior-converted cropland. If, however, a person did not complete the conversion activity by that date, the land will be subject to the same requirements under this rule as farmed wetlands.

The 1996 Act provides that a person may remain eligible for an action resulting in the conversion of a wetland if the wetland functions and values are adequately mitigated through the restoration of a converted wetland, the enhancement of an existing wetland, or the creation of a new wetland. Section 12.5(b)(4) provides that this exemption applies if the mitigation is completed in accordance with several requirements, including that the person implement a mitigation plan approved by NRCS. The mitigation plan may be a single document or it may be a component of a larger conservation plan created voluntarily by the program participant. The requirements for this exemption are similar to the requirements for restoration of a converted wetland under the current regulations, such as the granting of an easement to USDA, recording an easement on the public land records, and that such mitigation not be at the expense of the Federal government.

The 1996 Act provides that USDA may expend Federal funds for the establishment of a pilot program for mitigation banking. USDA has not yet decided whether it will establish such a pilot program or what the particulars of such a program would be. During the public comment period, USDA is especially soliciting comments from the public regarding this subject.

The 1996 Act removes the requirement for graduated sanctions if the FSA determines that a wetland violation was committed in good faith. Central to the determination about whether a person acted in good faith is the knowledge available to the person concerning the existence of a wetland on the subject land. This knowledge can either be direct, such as information received from NRCS in the form of a wetland determination, or can be inferred from a person's past experience with violating wetland laws or regulations. This interim final rule provides that if a person is considered to have acted in good faith and the person agrees to implement a mitigation plan, then USDA may waive applying the ineligibility provisions of § 12.4.

Section 12.6: Section 12.6 concerns the respective responsibilities of USDA agencies; the new responsibilities created by the 1996 Act have been added. Section 12.6(b) is amended to specify that FSA is responsible for determining the extent of reduction in benefits for wetland violations based on the seriousness of the violation, and for determining whether a person should receive relief because application of a conservation system would result in undue economic hardship. Section 12.6(c) is amended to reflect that NRCS is responsible for providing information to FSA relating to the seriousness of a violation.

In response to the need to coordinate with the MOA agencies regarding wetland determinations, a new paragraph has been added to § 12.6 New paragraph (f) provides that NRCS may accept the assistance of the MOA agencies in implementing these regulations. This paragraph also confirms that NRCS will continue to seek the coordination of the other agencies on wetland matters to increase the public's understanding of the importance of wetland functions and values and the objectives of the WC provisions and the Clean Water Act.

Section 12.7: Section 12.7 addresses certification by a program participant that such participant is in compliance with the HEL and WC provisions. Section 12.7 is amended to allow a person to certify application of practices in a plan or measurement of residue required by a plan.

Section 12.8: Section 12.8 is amended to revise the definition of affiliated persons for the purpose of determining whose benefits may be affected by a decision and to what extent. In particular, § 12.8(b) is amended to provide that spouses who provide sufficient evidence of separate operations shall not be considered affiliates, and partnerships, trusts, and joint ventures are not considered affiliates if the interest is held indirectly through another business enterprise. Section 12.8(d) limits the reduction in payments for partnerships, joint ventures, trust, or other enterprises to the extent of interest held by the person responsible for the violation. Section 12.8(e) states that limitations on affiliations if action has been taken to avoid payment reductions for partnerships, joint ventures, trusts, or the application of the sanctions provided for in the regulations.

Subpart B

Section 12.21: Section 12.21 is amended to include a reference to publication of soil loss equations at 7 CFR part 610.

Section 12.22: Section 12.22 is amended to allow combining HEL and non-HEL fields, but the requirements of these regulations continue to apply to the previous HEL portion only.

Section 12.23: Section 12.23 is amended to specify that: conservation systems shall be technically and economically feasible (based on local resource conditions and available technology), cost effective, and shall not cause undue economic hardship; the standard for determining whether a plan provides a substantial reduction in erosion is the estimated annual level of erosion compared to the level before the system is applied; for new land brought into production, in no case will the required conservation system permit a substantial increase in erosion; procedures for conducting field trials as on-farm reseach; and procedures and criteria used by FSA when a person requests relief based on undue economic hardship.

Subpart C

Subpart C addresses the technical responsibilities of NRCS and the technical criteria used to make the necessary determinations for wetland conservation under these regulations.

Section 12.30: Section 12.30 is amended to reflect that NRCS will continue to work with the Corps, EPA, and FWS to improve the quality of wetland determinations and other

processes that affect the implementation of the WC provisions.

The 1996 Act repealed the requirement for consultation with FWS, thus allowing the Secretary to determine under what circumstances FWS should be utilized in the implementation of the WC provisions. Section 12.30 is amended to reflect that NRCS will develop a process at the State level, in coordination with FWS, for implementing the WC provisions and review such implementation on an annual basis. The technical expertise of FWS may be utilized whenever NRCS determines that such expertise is needed to address adequately the requirements of the WC provisions or to enhance the quality of implementation.

Under the new mitigation flexibility provided by the 1996 Act, the expertise of FWS will be valuable for conducting wetland functional assessments associated with minimal effects determinations and formulation of mitigation plans. The State-level process is intended, in part, to identify any geographic or programmatic areas where NRCS may need additional technical expertise to assess biological impacts of proposed wetland conversions.

Section 12.30 is also amended to address the process for certification of wetland determinations for the implementation of the WC provisions of the 1985 Act. If NRCS certified a wetland determination prior to July 3, 1996, the certification will remain valid. Upon request, a person may obtain certification of a wetland determination. A certified wetland determination means that the determination is of sufficient quality to make a determination of ineligibility for program benefits under these regulations. As indicated above, NRCS will continue to work with the other MOA agencies to coordinate the identification and certification of wetlands for the purposes of these regulations and for the Clean Water Act. The agencies recognize the importance of providing certainty for the agricultural community as to the status of their wetland determinations which have not been certified. The Federal agencies are therefore considering establishing a specific time frame for completing the evaluation of existing wetland determinations. During this time frame, an evaluation would be made as to the accuracy of wetland determinations within a given geographic area or of a specific type of wetland. Based on the evaluation, landowners would be notified whether their current wetland determinations are acceptable for both the WC provisions and the Clean Water Act. USDA is especially seeking comments regarding implementation of this process.

Section 12.31; Section 12.31 is amended to reflect that NRCS will utilize the 1987 Corps Manual for determining the prevalence of hydrophytic vegetation. Section 12.31 is also amended to add the criteria for determining ''categorical minimal effect exemptions.'' If NRCS identifies any categories of conversion activities and conditions which would only have a minimal effect on wetland functions and values, then such activities and conditions will be placed on a list of ''categorical minimal effect exemptions'' and such conversion activities and conditions will be considered exempt from the ineligibility provisions of these regulations. NRCS will incorporate such activities and conditions in the provisions of these regulations USDA is especially seeking comments regarding implementation of this new exemption. For purposes of the Clean Water Act, the Corps intends to address this provision as part of its reissuance of the Clean Water Act section 404 nationwide permits (See 61 FR part VII (June 17, 1996)).

Sections 12.32 and 12.33: Sections 12.32 and 12.33 have been amended to incorporate the definitions for farmed wetland, farmed-wetland pasture, commenced-conversion wetland, and prior-converted cropland, where appropriate.

Section 12.33: Section 12.33 has also been amended to modify the conditions under which NRCS will consider a particular site to be abandoned for purposes of these regulations. A person who wishes to allow a particular site to revert to wetland conditions should contact NRCS to ascertain what documentation is necessary to prevent such land from being considered abandoned for purposes of the WC provisions of these regulations. For purposes of the Clean Water Act, the Corps intends to address this provision as part of its re-issuance of the Clean Water Act section 404 nationwide permits (See 61 FR part VII (June 17, 1996)).

The amendments to part 12 do not affect the recordkeeping requirements and estimated burdens previously reviewed and approved under Office of Management and Budget control number 0560–0004.

List of Subjects in 7 CFR Part 12

Administrative practices and procedures, Soil Conservation, Wetlands.

Accordingly, Title 7 of the Code of Federal Regulations is amended by revising Part 12 as follows:

PART 12—HIGHLY ERODIBLE LAND AND WETLAND CONSERVATION

Subpart A—General Provisions

Sec.
12.1 General.
12.2 Definitions.
12.3 Applicability.
12.4 Determination of ineligibility.
12.5 Exemptions.
12.6 Administration.
12.7 Certification of compliance.
12.8 Affiliated persons.
12.9 Landlords and tenants.
12.10 Scheme or device.
12.11 Action based upon advice or action of USDA.
12.12 Appeals.

Subpart B—Highly Erodible Land Conservation

12.20 NRCS responsibilities regarding highly erodible land.
12.21 Identification of highly erodible lands criteria.
12.22 Highly erodible field determination criteria.
12.23 Conservation plans and conservation systems.

Subpart C—Wetland Conservation

12.30 NRCS responsibilities regarding wetlands.
12.31 Onn-site wetland identification criteria.
12.32 Converted wetland identification criteria.
12.33 Use of wetland and converted wetland.
12.34 Paperwork Reduction Act assigned number.

Authority: 16 U.S.C. 3801 *et seq.*

Subpart A—General Provisions

§ 12.1 General.

(a) *Scope.* This part sets forth the terms and conditions under which a person who produces an agricultural commodity on highly erodible land or designates such land for conservation use, plants an agricultural commodity on a converted wetland, or converts a wetland shall be determined to be ineligible for certain benefits provided by the United States Department of Agriculture (USDA) and agencies and instrumentalities of USDA.

(b) *Purpose.* The purpose of the provisions of this part are to remove certain incentives for persons to produce agricultural commodities on highly erodible land or converted wetland and to thereby—

(1) Reduce soil loss due to wind and water erosion;

(2) Protect the Nation's long-term capability to produce food and fiber;

(3) Reduce sedimentation and improve water quality; and

(4) Assist in preserving the functions and values of the Nation's wetlands.

§ 12.2 Definitions.

(a) *General.* The following definitions shall be applicable for the purposes of this part:

Agricultural commodity means any crop planted and produced by annual tilling of the soil, including tilling by one-trip planters, or sugarcane.

CCC means the Commodity Credit Corporation, wholly-owned government corporation within USDA organized under the provisions of 15 U.S.C. 714 *et seq.*

Conservation District (CD) means a subdivision of a State or local government organized pursuant to the applicable law to develop and implement soil and water conservation activities or programs.

Conservation plan means the document that—

(1) Applies to highly erodible cropland;

(2) Describes the conservation system applicable to the highly erodible cropland and describes the decisions of the person with respect to location, land use, tillage systems, and conservation treatment measures and schedules; and

(3) Is approved by the local soil conservation district in consultation with the local committees established under section 8(b)(5) of the Soil Conservation and Domestic Allotment Act (16 U.S.C. 590h(b)(5)) and the Natural Resources Conservation Service (NRCS) for purposes of compliance with this part.

Conservation system means a combination of one or more conservation measures or management practices that are—

(1) Based on local resource conditions, available conservation technology, and the standards and guidelines contained in the NRCS field office technical guides (available from NRCS State offices); and

(2) Designed for purposes of this part to achieve, in a cost-effective and technically practicable manner, a substantial reduction in soil erosion or a substantial improvement in soil conditions on a field or group of fields containing highly erodible cropland when compared to the level of erosion or soil conditions that existed before the application of the conservation measures and management practices.

Conservation use or set aside means cropland that is designated as conservation-use acreage, set aside, or other similar designation for the purpose of fulfilling provisions under any acreage-limitation or land-diversion program administered by the Secretary of Agriculture requiring that the producer devote a specified acreage to conservation or other non-crop production uses.

Creation of a wetland means the development of the hydrologic, geochemical, and biological components necessary to support and maintain a wetland where a wetland did not previously exist. Any wetland established on a non-hydric soil will be considered a created wetland.

CSREES means the Cooperative State Research, Education, and Extension Service, an agency of USDA which is generally responsible for coordinating the information and educational programs of USDA.

Department means the United States Department of Agriculture (USDA).

Enhancement of a wetland means the alteration of an existing wetland to increase its specific functions and values. Enhancement actions include new capabilities, management options, structures, or other actions to influence one or several functions and values.

Erodibility index means a numerical value that expresses the potential erodibility of a soil in relation to its soil loss tolerance value without consideration of applied conservation practices or management.

FSA means the Farm Service Agency, an agency of USDA which is generally responsible for administering commodity production adjustment and certain conservation programs of USDA.

Field means a part of a farm that is separated from the balance of the farm by permanent boundaries such as fences, roads, permanent waterways, or other similar features. At the option of the owner or operator of the farm, croplines may also be used to delineate a field if farming practices make it probable that the croplines are not subject to change. Any highly erodible land on which an agricultural commodity is produced after December 23, 1985, and is not exempt under § 12.5(a), shall be considered part of the field in which the land was included on December 23, 1985, unless, to carry out this title, the owner and FSA agree to modify the boundaries of the field.

Highly erodible land means land that has an erodibility index of 8 or more.

Hydric soils means soils that, in an undrained condition, are saturated, flooded, or ponded long enough during a growing season to develop an anaerobic condition that supports the growth and regeneration of hydrophytic vegetation.

Hydrophytic vegetation means plants growing in water or in a substrate that is at least periodically deficient in oxygen during a growing season as a result of excessive water content.

Landlord means a person who rents or leases farmland to another person.

Local FSA office means the county office of the Farm Service Agency serving the county or a combination of counties in the area in which a person's land is located for administrative purposes.

NRCS means the Natural Resources Conservation Service, an agency within USDA which is generally responsible for providing technical assistance in matters of natural resources conservation and for administering certain conservation programs of USDA.

Operator means the person who is in general control of the farming operations on the farm during the crop year.

Owner means a person who is determined to have legal ownership of farmland and shall include a person who is purchasing farmland under contract.

Person means an individual, partnership, association, corporation, cooperative, estate, trust, joint venture, joint operation, or other business enterprise or other legal entity and, whenever applicable, a State, a political subdivision of a State, or any agency thereof, and such person's affiliates as provided in § 12.8 of this part.

Restoration of a wetland means the re-establishment of wetland conditions, including hydrologic condition or native hydrophytic vegetation, to an area where a wetland had previously existed.

Secretary means the Secretary of USDA.

Sharecropper means a person who performs work in connection with the production of a crop under the supervision of the operator and who receives a share of such crop for such labor.

Soil map unit means an area of the landscape shown on a soil map which consists of one or more soils.

State means each of the 50 states, the District of Columbia, the Commonwealth of Puerto Rico, Guam, the Virgin Islands of the United States, American Samoa, the Commonwealth of the Northern Mariana Islands, or the Trust Territory of the Pacific Islands.

Tenant means a person usually called a ''cash tenant'', ''fixed-rent tenant'', or ''standing rent tenant'' who rents land from another for a fixed amount of cash or a fixed amount of a commodity to be paid as rent; or a person (other than a sharecropper) usually called a ''share tenant'' who rents land from another person and pays as rent a share of the crops or proceeds therefrom. A tenant shall not be considered the farm operator unless the tenant is determined

to be the operator pursuant to this part and 7 CFR part 718.

Wetland, except when such term is a part of the term ''converted wetland'', means land that—

(1) Has predominance of hydric soils;

(2) Is inundated or saturated by surface or groundwater at a frequency and duration sufficient to support a prevalence of hydrophytic vegetation typically adapted for life in saturated soil conditions; and

(3) Under normal circumstances does not support a prevalence of such vegetation, except that this term does not include lands in Alaska identified as having a high potential for agricultural development and a predominance of permafrost soils.

Wetland determination means a decision regarding whether or not an area is a wetland, including identification of wetland type and size. A wetland determination may include identification of an area as one of the following types of wetland—

(1) *Artificial wetland* is an area that was formerly non-wetland, but now meets wetland criteria due to human activities, such as:

(i) An artificial lake or pond created by excavating or diking land that is not a wetland to collect and retain water that is used primarily for livestock, fish production, irrigation, wildlife, fire control, flood control, cranberry growing, or rice production, or as a settling pond; or

(ii) A wetland that is temporarily or incidentally created as a result of adjacent development activity;

(2) *Commenced-conversion wetland* is a wetland, farmed wetland, farmed-wetland pasture, or a converted wetland on which conversion began, but was not completed, prior to December 23, 1985.

(3) *Converted wetland* is a wetland that has been drained, dredged, filled, leveled, or otherwise manipulated (including the removal of woody vegetation or any activity that results in impairing or reducing the flow and circulation of water) for the purpose of or to have the effect of making possible the production of an agricultural commodity without further application of the manipulations described herein if:

(i) Such production would not have been possible but for such action, and

(ii) Before such action such land was wetland, farmed wetland, or farmed-wetland pasture and was neither highly erodible land nor highly erodible cropland;

(4) *Farmed wetland* is a wetland that prior to December 23, 1985, was manipulated and used to produce an agricultural commodity, and on December 23, 1985, did not support woody vegetation and met the following hydrologic criteria:

(i) Is inundated for 15 consecutive days or more during the growing season or 10 percent of the growing season, whichever is less, in most years (50 percent chance or more), or

(ii) If a pothole, playa, or pocosion, is ponded for 7 or more consecutive days during the growing season in most years (50 percent chance of more) or is saturated for 14 or more consecutive days during the growing season in most years (50 percent chance or more);

(5) *Farmed-wetland pasture* is wetland that was manipulated and managed for pasture or hayland prior to December 23, 1985, and on December 23, 1985, met the following hydrologic criteria:

(i) Inundated or ponded for 7 or more consecutive days during the growing season in most years (5) percent chance or more), or

(ii) Saturated for 14 or more consecutive days during the growing season in most years (50 percent chance or more);

(6) *Not-inventoried land*, is an area for which no evaluation of soils, vegetation, or hydrology has been conducted to determine if wetland criteria are met;

(7) *Non-wetland* is;

(i) Land that under natural conditions does not meet wetland criteria, or

(ii) Is converted wetland the conversion of which occurred prior to December 23, 1985, and on that date, the land did not meet wetland criteria but and agricultural commodity was not produced and the area was not managed for pasture or hay;

(8) *Prior-converted cropland* is a converted wetland where the conversion occurred prior to December 23, 1985, an agricultural commodity had been produced at least once before December 23, 1985, and as of December 23, 1985, the converted wetland did not support woody vegetation and met the following hydrologic criteria:

(i) Inundation was less than 15 consecutive days during the growing season or 10 percent of the growing season, whichever is less, in most years (50 percent chance or more); and

(ii) If a pothole, playa or pocosin, ponding was less than 7 consecutive days during the growing season in most years (50 percent chance or more) and saturation was less than 14 consecutive days during the growing season most years (50 percent chance or more); or

(9) *Wetland*, as defined above in this section.

Wetland delineation means outlining the boundaries of a wetland determination on aerial photography, digital imagery, other graphic representation of the area, or on the land.

(b) *Terms for FSA operations.* In the regulations in this part, and in all instructions, forms, and documents in connection therewith, all other words and phrases specifically relating to FSA operations shall, unless required by the subject matter or the specific provisions of this part, have the meanings assigned to them in the regulations at part 718 of this title that govern reconstitutions of farms, allotments, and bases and any subsequent amendment thereto.

§ 12.3 Applicability.

(a) *Geographic scope.* The provisions of this part shall apply to all land, including Indian tribal land, in the fifty States, the District of Columbia, the Commonwealth of Puerto Rico, Guam, the Virgin Island of the United States, American Samoa, the Commonwealth of the Northern Mariana Islands, and the Federated States of Micronesia, the Republic of Palau, and the Republic of the Marshall Islands.

(b) *Effective date.* The provisions of this part apply to all actions taken after July 3, 1996, and to determinations made after or pending on July 3, 1996, except to the extent that § 12.5(a)(5) and 12.5 (b)(4) through (b)(8) specify retroactive application on December 23, 1985, and November 28, 1990, for certain actions and determinations regarding wetlands and converted wetlands. Actions taken and determinations made prior to July 3, 1996, are subject to regulations set forth in this part as of July 2, 1996, except as otherwise provided in this part. Further, to the extent that a person may be eligible for an exemption for an action taken before July 3, 1996, the action is subject to the provisions of this part.

§ 12.4 Determination of ineligibility.

(a) *Actions.* Except as provided in § 12.5, a person shall be ineligible for all or a portion of USDA program benefits listed in this section if:

(1) The person produces an agricultural commodity on a field in which highly erodible land is predominant, or designates such a field for conservation use;

(2) The person produces an agricultural commodity on wetland that was converted after December 23, 1995; or

(3) After November 28, 1990, the person converts a wetland by draining, dredging, filling, leveling, removing woody vegetation, or other means for the purpose, or to have the effect, of making the production of an agricultural commodity possible.

(b) *Highly erodible land*. A person determined to be ineligible under paragraph (a)(1) of this section may be ineligible for all program benefits listed in (d) and (e) of this section.

(c) *Wetland conservation*. A person determined to be ineligible under paragraph (a)(2) of this section shall be ineligible for all or a portion of the USDA program benefits listed in paragraph (d) of this section for which the person otherwise would have been eligible during the crop year of the commodity that was planted on the converted wetland. A person determined to be ineligible under paragraph (a)(3) of this section for the conversion of a wetland shall be ineligible for all or a portion of the USDA program benefits listed in paragraph (d) of this section for which the person otherwise would have been eligible during the crop year which is equal to the calendar year during which the violation occurred and each subsequent crop year until the converted wetland is restored or the loss of wetland functions and values have been mitigated prior to the beginning of such calendar year in accordance with § 12.5(b)(4)(i) (A) and (C) through (F) of this part. Ineligibility under paragraph (a)(2) or (a)(3) of this section may be reduced, in lieu of the loss of all benefits specified under paragraph (d) of this section for such crop year, based on the seriousness of the violation, as determined by the FSA Deputy Administrator for Farm Programs or designee upon recommendation by the FSA County Committee. Factors such as the information that was available to the affected person prior to the violation, previous land use patterns, the existence of previous wetland violations under this part or under other Federal, State, or local wetland provisions, the wetland functions and values affected, the recovery time for full mitigation of the wetland functions and values, and the impact that a reduction in payments would have on the person's ability to repay a USDA farm loan shall be considered to making this determination.

(d) *Programs subject to either highly erodible land or wetland conservation*. USDA program benefits covered by a determination of ineligibility under this rule are:

(1) Contract payments under a production flexibility contract, marketing assistance loans, and any type of price support or payment made available under the Agricultural Market Transition Act, the Commodity Credit Corporation Charter Act (15 U.S.C. 714 et seq.), or any other Act;

(2) A farm credit program loan made or guaranteed under the Consolidated Farm and Rural Development Act (7 U.S.C. 1921 *et seq.*) or any other provision of law administered by FSA if the Secretary determines that the proceeds of such loan will be used for a purpose that contributes to the conversion of wetlands that would make production of an agricultural commodity possible or for a purpose that contributes to excessive erosion of highly erodible land (*i.e.*, production of an agricultural commodity or highly erodible land without a conservation plan or conservation system as required by this part);

(3) A payment made pursuant to a contract entered into under the Environmental Quality Incentives Program under chapter 4 of subtitle D of the Food Security Act of 1985, as amended; or a payment under any other provision of Subtitle D of that Act;

(4) A payment made under section 401 or 402 of the Agricultural Credit Act of 1978 (16 U.S.C. 2201 or 2202);

(5) A payment, loan, or other assistance under section 3 or 8 of the Watershed Protection and Flood Prevention Act (16 U.S.C. 1003 or 1006a).

(e) *Programs subject to highly erodible land only*. In addition to programs listed in paragraph (d) of this section, a person determined to be ineligible under paragraph (a)(1) of this section shall be ineligible as determined by FSA for the following USDA program benefits for which the person otherwise would have been eligible during the crop year for which the determination applies:

(1) A farm storage facility loan made under section 4(h) of the Commodity Credit Corporation Charter Act (15 U.S.C. 714b(h));

(2) A disaster payment made under the Federal Agricultural Improvement and Reform Act, Pub. L. 104–127, or any other act; and

(3) A payment made under section 4 or 5 of the Commodity Credit Corporation Charter Act (15 U.S.C. 714b or 714c) for the storage of an agricultural commodity acquired by the Commodity Credit Corporation.

(f) *Prior loans*. The provisions of paragraphs (a), (b), and (c) of this section do not apply to any loan described in paragraphs (d) or (e) of this section that was made prior to December 23, 1985.

(g) *Determination of ineligibility*. For the purpose of paragraph (a) of this section, a person shall be determined to have produced an agricultural commodity on a field in which highly erodible land is predominant or to have designated such a field for conservation use, to have produced an agricultural commodity on converted wetland, or to have converted a wetland if:

(1) NRCS has determined that—

(i) Highly erodible land is predominant in such field, or

(ii) All or a portion of the field is converted wetland; and

(2) FSA has determined that the person is or was the owner or operator of the land, or entitled to share in the crops available from the land, or in the proceeds thereof; and

(3) With regard to the provisions of paragraph (a)(1) and (a)(2) of this section, FSA has determined that the land is or was planted to an agricultural commodity or was designated as conversation use during the year for which the person is requesting benefits.

(h) *Intent to participate in USDA programs*. Persons who wish to participate in any of the USDA programs described in paragraph (d) or (e) of this section are responsible for contacting the appropriate agency of USDA well in advance of the intended participated date so that Form AD–1026 can be completed. This contact will help assure that the appropriate determinations regarding highly erodible land or wetland, and conversation plans or conversation systems are scheduled in a timely manner. A late contact may not allow sufficient time for USDA to service the request and could result in a substantial delay in receiving a USDA determination of eligibility or ineligibility.

§ 12.5 Exemption.

(a) *Exemptions regarding highly erodible land*.

(1) *Highly erodible cropland in production or in USDA programs during 1981 through 1985 crop years*. During the period beginning on December 23, 1985, and ending on the later of January 1, 1990, or the date that is two years after the date the cropland on which an agricultural commodity is produced was surveyed by NRCS to determine if such land is highly erodible, no person shall be determined to be ineligible for benefits as provided in § 12.4 as the result of the production of an agricultural commodity on any highly erodible land:

(i) That was planted to an agricultural commodity in any year 1081 through 1985; or

(ii) That was set aside, diverted, or otherwise not cultivated in any such crop years under a program administered by the Secretary for any such crops to reduce production of an agricultural commodity.

(2) *Compliance with a conservation plan or conservation system.* as further specified in this part, no person shall be ineligible for the program benefits described in § 12.4 as the result of production of an agricultural commodity on highly erodible land or the designation of such land for conservation use if such production or designation is in compliance with a conservation plan or conservation system approved under paragraph (a)(2)(i) or (a)(2)(ii) of this section. A person shall not be ineligible for program benefits under § 12.4 as the result of the production of an agricultural commodity on highly erodible land or as the result of designation of such land as conservation use if the production or designation is:

(i) In an area within a CD, under a conservation system that has been approved by the CD after the CD determines that the conservation system is in conformity with technical standards set forth in the NRCS field office technical guide for such district; or

(ii) In an area not within a CD, under a conservation system that has been approved by NRCS to be adequate for the production of such agricultural commodity on highly erodible land or for the designation of such land as conservation use.

(3) *Reliance upon NRCS determination for highly erodible land.* A person may be relieved from ineligibility for program benefits as the result of the production of an agricultural commodity which was produced on highly erodible land or for the designation of such land as conservation use in reliance on a determination by NRCS that such land was not highly erodible land, except that this paragraph shall not apply to any agricultural commodity that was planted on highly erodible land, or for the designation of highly erodible land as conservation use after NRCS determines that such land is highly erodible land, and the person is notified of such determinations.

(4) *Areas of 2 acres or less.* No person shall be determined to be ineligible under § 12.4 for noncommercial production of agricultural commodities on highly erodible land on an area of 2 acres or less if it is determined by FSA that such production is not intended to circumvent the conservation requirements otherwise applicable under this part.

(5) *Good faith.*

(i) No person shall become ineligible under § 12.4 as a result of the failure of such person to apply a conservation system on highly erodible land that was converted from native vegetation, i.e. rangeland or woodland, to crop production before December 23, 1985, if FSA determines such person has acted in good faith and without the intent to violate the provisions of this part and if NRCS determines that the person complies with paragraph (a)(5)(ii) of this section.

(ii) A person is who determined to meet the requirements of paragraph (a)(5)(i) of this section shall be allowed a reasonable period of time, as determined by NRCS, but not to exceed one year, during which to implement the measures and practices necessary to be considered applying the person's conservation plan. If a person does not take the required corrective actions, the person may be determined to be ineligible for the crop year during which such actions were to be taken as well as any subsequent crop years. Notwithstanding the good-faith requirements of paragraph (a)(5)(i) of this section, if NRCS observes a possible compliance deficiency while providing on-site technical assistance, NRCS shall provide to the responsible person, not later than 45 days after observing the possible violation, information regarding actions needed to comply with the plan and this subtitle. NRCS shall provide this information in lieu of reporting the observation as a violation, if the responsible person attempts to correct the deficiencies as soon as practicable, as determined by NRCS, after receiving the information, and if the person takes corrective action as directed by NRCS not later than one year after receiving the information. If a person does not take the required corrective actions, the person may be determined to be ineligible for the crop year during which the compliance deficiencies occurred as well as any subsequent crop years.

(iii) No person shall become ineligible under § 12.4 as a result of failure to apply a conservation system with respect to highly erodible cropland that was converted from native vegetation, i.e., rangeland or woodland, to crop production after December 23, 1985, if such person has acted in good faith and without an intent to violate the provisions of this part. The person shall, in lieu of the loss of all benefits specified under § 12.4 (d) and (e) for such crop year, be subject to a reduction in benefits of not less than $500 nor more than $5,000 depending upon the seriousness of the violation, as determined by FSA. The dollar amount of the reduction will be determined by FSA and may be based on the number of acres and the degree of erosion hazard for the area in violation, as determined by NRCS, or upon such other factors as FSA deems appropriate.

(iv) Any person whose benefits are reduced in a crop year under paragraph (a)(5) of this section may be eligible for all of the benefits specified under § 12.4 (d) and (e) for any subsequent crop year if NRCS determines that such person is applying a conservation plan according to the schedule set forth in the plan on all highly erodible land planted to an agricultural commodity or designated as conservation use.

(6) *Allowable variances.*

(i) Notwithstanding any other provisions of this part, no person shall be determined to be ineligible for benefits as a result of the failure of such person to apply a conservation system if NRCS determines that—

(A) The failure is technical and minor in nature and that such violation has little effect on the erosion control purposes of the conservation plan applicable to the land on which the violation has occurred; or

(B) The failure is due to circumstances beyond the control of the person; or

(C) NRCS grants a temporary variance from the practices specified in the plan for the purpose of handling a specific problem, including weather, pest, and disease problems, which NRCS determines cannot reasonably be addressed except through such variance.

(ii) If the person's request for a temporary variance involves the use of practices or measures to address weather, pest, or disease problems, NRCS shall make a decision on whether to grant the variance during the 30-day period beginning on the date of receipt of the request. If NRCS fails to render a decision during the period, the temporary variance shall be considered granted unless the person seeking the variance had reason to know that the variance would not be granted. In determining whether to grant a variance for natural disasters such as weather, pest, or disease problems, NRCS will consider such factors as:

(A) The percent of a stand damaged or destroyed by the event;

(B) The percent of expected crop production compared to normal production for that crop;

(C) The documented invasion of non-native insects, weeds, or diseases for which no recognized treatment exists;

(D) Whether an event is severe or unusual based on historical weather records; and

(E) Other specific circumstances caused by a natural event that prevented the implementation of conservation practices or systems, installation of structures, or planting of cover crops.

(b) *Exemptions for wetlands and converted wetlands.*

(1) *General exemptions.* A person shall not be determined to be ineligible for program benefits under § 12.4 as the result of the production of an agricultural commodity on converted wetland or the conversion of wetland if:

(i) The land is a prior-converted cropland and meets the definition of a prior-converted cropland as of the date of a wetland determination by NRCS;

(ii) The land has been determined by NRCS to be a prior-converted cropland and such determination has been certified, and NRCS determines that the wetland characteristics returned after the date of the wetland certification as a result of—

(A) The lack of maintenance of drainage, dikes, levees, or similar structures,

(B) The lack of management of the lands containing the wetland, or

(C) Circumstances beyond the control of the person;

(iii) The land was determined by NRCS to be a farmed wetland or a farmed-wetland pasture and—

(A) Such land meets wetland criteria through a voluntary restoration, enhancement, or creation action after that determination,

(B) The technical determinations regarding the baseline site conditions and the restoration, enhancement, or creation action have been adequately documented by NRCS,

(C) The proposed conversion action is documented by the NRCS prior to implementation, and

(D) The extent of the proposed conversion is limited so that the conditions will be at least equivalent to the wetland functions and values that existed at the time of implementation of the voluntary wetland restoration, enhancement, or creation action;

(iv) NRCS has determined that the conversion if for a purpose that does not make the production of an agricultural commodity possible, such as conversions for fish production, trees, vineyards, shrubs, cranberries, agricultural waste management structures, livestock ponds, fire control, or building and road construction and no agricultural commodity is produced on such land;

(v) NRCS has determined that the actions of the person with respect to the conversion of the wetland or the combined effect of the production of an agricultural commodity on a wetland converted by the person or by someone else, individually and in connection with all other similar actions authorized by NRCS in the area, would have only a minimal effect on the wetland functions and values of wetlands in the area;

(vi) (A) After December 23, 1985, the Army Corps of Engineers issued an individual permit pursuant to section 404 of the Clean Water Act, 33 U.S.C. 1344, authorizing such action and the permit required mitigation that adequately replaced the functions and values of the wetlands converted, as determined by NRCS, or

(B) After December 23, 1985, the action is encompassed under section 404 of the Clean Water Act, 33 U.S.C. 1344, by an Army Corps of Engineers nationwide or regional general permit and the wetland functions and values were adequately mitigated, as determined by NRCS; or

(vii) The land is determined by NRCS to be—

(A) An artificial wetland,

(B) A wet area created by a water delivery system, irrigation, irrigation system, or application of water for irrigation,

(C) A nontidal drainage or irrigation ditch excavated in non-wetland, or

(D) A wetland converted by actions of persons other than the person applying for USDA program benefits or any of the person's predecessors in interest after December 23, 1985, if such conversion was not the result of a scheme or device to avoid compliance with this part. Further drainage improvement on such land is not permitted without loss of eligibility for USDA program benefits, unless NRCS determines under paragraph (b)(1)(v) of this section that further drainage activities applied to such land would have minimal effect on the wetland functions and values in the area. In applying this paragraph, a converted wetland shall be presumed to have been converted by the person applying for USDA program benefits unless the person can show that the conversion was caused by a third party with whom the person was not associated through a scheme or device as described under § 12.10 of this part. In this regard, activities of a water resource district, drainage district, or similar entity will be attributed to all persons within the jurisdiction of the district or other entity who are assessed for the activities of the district or entity. Accordingly, where a person's wetland is converted due to the actions of the district or entity, the person shall be considered to have caused or permitted the drainage. Notwithstanding the provisions of the preceding sentences and as determined by FSA to be consistent with the purposes of this part, the activities of a drainage district or other similar entity will not be attributed to a person to the extent that the activities of the district or entity were beyond the control of the person and the wetland converted is not used by the person for the production of an agricultural commodity or a forage crop for harvest by mechanical means or mitigation for the converted wetland occurs in accordance with this part.

(2) *Commenced conversion wetlands.*

(i) The purpose of a determination of a commenced conversion made under this paragraph is to implement the legislative intent that those persons who had actually started conversion of a wetland or obligated funds for conversion prior to December 23, 1985, would be allowed to complete the conversion so as to avoid unnecessary economic hardship.

(ii) All persons who believed they had a wetland or converted wetland for which conversion began but was not completed prior to December 23, 1985, must have requested by September 19, 1988, FSA to make a determination of commencement in order to be considered exempt under this section.

(iii) Any conversion activity considered by FSA to be commenced under this section lost its exempt status if such activity as not completed on or before January 1, 1995. For purposes of this part, land on which such conversion activities were completed by January 1, 1995, shall be evaluated by the same standards and qualify for the same exemptions as prior-converted croplands. For purposes of this part, land on which such conversion activities were not completed by January 1, 1995, shall be evaluated by the same standards and qualify for the same exemptions as wetlands or famed wetlands, as applicable.

(iv) Only those wetlands for which the construction had begun, or to which the contract or purchased supplies and materials related, qualified for a determination of commencement. However, in those circumstances where the conversion of wetland did not meet the specific requirements of this paragraph, the person could have requested a commencement of conversion determination from the FSA Deputy Administrator for Farm Programs, upon a showing that undue economic hardship would have resulted because of substantial financial obligations incurred prior to December 23, 1985, for the primary and direct purpose of converting the wetland.

(3) *Wetlands farmed under natural conditions.* A person shall not be determined to be ineligible for program benefits under § 12.4 of this part as a result of the production of an agricultural commodity on a wetland on which the owner or operator of a farm

or ranch uses normal cropping or ranching practices to produce agricultural commodities in a manner that is consistent for the area, where such production is possible as a result of natural conditions, such as drought, and is without action by the producer that alters the hydrology or removes woody vegetation.

(4) *Mitigation.*

(i) No person shall be determined to be ineligible under § 12.4 for any action associated with the conversion of a wetland if the wetland functions and values are adequately mitigated, as determined by NRCS, through the restoration of a converted wetland, the enhancement of an existing wetland, or the creation of a new wetland, if the mitigation—

(A) Is in accordance with a mitigation plan approved by NRCS;

(B) Is in advance of, or concurrent with, the wetland conversion or the production of an agricultural commodity, as applicable;

(C) Is not at the expense of the federal government in either supporting the direct or indirect costs of the restoration activity or costs associated with acquiring or securing mitigation sites, except if conducted under a mitigation banking pilot program established by USDA;

(D) Occurs on lands in the same general area of the local watershed as the converted wetlands, provided that for purposes of this paragraph, lands in the same general area of the local watershed may include regional mitigation banks;

(E) Is on lands for which the owner has granted an easement to USDA, recorded the easement on public land records, and has agreed to the maintenance of the restored, created, or enhanced wetland for as long as the converted wetland for which the mitigation occurred remains in agricultural use or is not returned to its original wetland classification with equivalent functions and values; and

(F) Provides the equivalent functions and values that will be lost as a result of the wetland conversion.

(ii) A mitigation plan is a record of decisions that document the actions necessary to compensate for the loss of wetland functions and values that result from converting a wetland. The mitigation plan may be a component of a larger natural resources conservation plan.

(iii) The State Conservationist, in consultation with the State Technical Committee, may name certain types or classes of wetland not eligible for exemption under paragraph (b)(4)(i) of this section where the State Conservationist determines that mitigation will not achieve equivalent replacement of wetland functions and values within a reasonable time frame or for other reasons identified by the State Conservationist. Any type or class of wetland that a State Conservationist identifies as not eligible for exemption under paragraph (b)(4)(i) of this section will be published in the Federal Register for inclusion in this part.

(5) *Good Faith Violations.*

(i) A person who is determined under § 12.4 to be ineligible for benefits as the result of the production of an agricultural commodity on a wetland converted after December 23, 1985, or as the result of the conversion of a wetland after November 28, 1990, may regain eligibility for benefits if—

(A) FSA determines that such person acted in good faith and without the intent to violate the wetland provisions of this part, and

(B) NRCS determines that the person within an agreed to period, not to exceed 1 year, is implementing all practices in a mitigation plan.

(ii) In determining whether a person acted in good faith under paragraph (b)(5)(i)(A) of this section, the FSA shall consider such factors as whether—

(A) The characteristics of the site were such that the person should have been aware that a wetland existed on the subject land,

(B) NRCS had informed the person about the existence of a wetland on the subject land,

(C) The person did not convert the wetland, but planted an agricultural commodity on converted wetland when the person should have known that a wetland previously existed on the subject land,

(D) The person has a record of violating the wetland provisions of this part or other Federal, State, or local wetland provisions, or

(E) There exists other information that demonstrates that the person acted with the intent to violate the wetland provisions of this part.

(iii) After the requirements of paragraph (b)(5)(i) of this section are met, USDA may waive applying the ineligibility provisions of § 12.4.

(6) *Reliance upon NRCS wetland determination.* (i) A person shall not be ineligible for program benefits as a result of taking an action in reliance on a previous certified wetland determination by NRCS.

(ii) A person who may be ineligible for program benefits as the result of the production of an agricultural commodity on converted wetland or for the conversion of a wetland may seek relief under § 12.11 of this part if such action was taken in reliance on an incorrect technical determination by NRCS as to the status of such land. If the error caused the person to make a substantial financial investment, as determined by the NRCS, for the conversion of a wetland, the person may be relieved of ineligibility for actions related to that portion of the converted wetland for which the substantial financial investment was expended in conversion activities. The relief available under this paragraph shall not apply to situations in which the person knew or reasonably should have known that the determination was in error because the characteristics of the site were such that the person should have been aware that a wetland existed on the subject land, or for other reasons.

(7) *Responsibliity to provide evidence.* It is the responsibility of the person seeking an exemption related to converted wetlands under this section to provide evidence, such as receipts, crop-history data, drawings, plans or similar information, for purposes of determining whether the conversion or other action is exempt in accordance with this section.

§ 12.6 Administration.

(a) *General.* A determination of ineligibility for benefits in accordance with the provisions of this part shall be made by the agency of USDA to which the person has applied for benefits. All determinations required to be made under the provisions of this part shall be made by the agency responsible for making such determinations, as provided in this section.

(b) *Administration by FSA.*

(1) The provisions of this part which are applicable to FSA will be administered under the general supervision of the Administrator, FSA, and shall be carried out in the field in part by State FSA committees and county FSA committees (COC).

(2) The FSA Deputy Administrator for Farm Programs may determine any question arising under the provisions of this part which are applicable to FSA and may reverse or modify any determination of eligibility with respect to programs administered by FSA made by a State FSA committee or COC or any other FSA office or FSA official (except the Administrator) in connection with the provisions of this part.

(3) FSA shall make the following determinations which are required to be made in accordance with this part:

(i) Whether a person produced an agricultural commodity on a particular field as determined under § 12.5(a)(1);

(ii) The establishment of field boundaries;

(iii) Whether land was planted to an agricultural commodity in any of the years, 1981 through 1985, for the purposes of § 12.5(a)(1);

(iv) Whether land was set aside, diverted, or otherwise not cultivated under a program administered by the Secretary for any crop to reduce production of an agricultural commodity under § 12.4(g) and § 12.5(a)(1);

(v) Whether for the purposes of § 12.9, the production of an agricultural commodity on highly erodible land or converted wetland by a landlord's tenant or sharecropper is required under the terms and conditions of the agreement between the landlord and such tenant or sharecropper;

(vi) Whether the conversion of a particular wetland was commenced before December 23, 1985, for the purposes of § 12.5(b)(3);

(vii) Whether the conversion of a wetland was caused by a third party under § 12.5(b)(1)(vii)(D);

(viii) Whether certain violations were made in good faith under §§ 12.5(a)(5) or 12.5(b)(5);

(ix) The determination of the amount of reduction in benefits based on the seriousness of the violation, based on technical information provided by NRCS;

(x) The determination of whether the application of the producer's conservation system would impose an undue economic hardship on the producer; and

(xi) Whether the proceeds of a farm loan made, insured, or guaranteed by FSA will be used for a purpose that will contribute to excessive erosion of highly erodible land or to the conversion of wetland.

(4) A representative number of farms selected in accordance with instructions issued by the Deputy Administrator shall be inspected by an authorized representative of FSA to determine compliance with any requirement specified in this part as a prerequisite for obtaining program benefits.

(5) FSA may consult with U.S. Fish and Wildlife Service on third-party determinations.

(c) *Administraiton by NRCS.*

(1) The provisions of this part that are applicable to NRCS shall be administered under the general supervision of the Deputy Chief for Natural Resources Conservation Programs, and shall be carried out in the field by the regional conservationist, state conservationist, area conservationist, and district conservationist or other NRCS representative.

(2) An NRCS representative shall make the following determinations which are required to be made in accordance with this part:

(i) Whether land is highly erodible or has a wetland type or a converted wetland identified in accordance with the provisions of this part;

(ii) Whether highly erodible land is predominant on a particular field under § 12.22;

(iii) Whether the conservation plan that a person is applying is based on the local NRCS field office technical guide and is approved by—

(A) The CD and NRCS, or

(B) By NRCS;

(iv) Whether the conservation system that a person is using has been approved by the CD under § 12.5(a)(2) or, in an area not within a CD, a conservation system approved by NRCS to be adequate for the production of an agricultural commodity on highly erodible land;

(v) Whether the actions of a person(s) with respect to the conversion of a wetland or production of an agricultural commodity on converted wetland would have only a minimal effect on the functions and values of wetlands in the area;

(vi) Whether an approved conservation plan is being applied on highly erodible fields in accordance with the schedule specified therein or whether a failure to apply the plan is technical and minor in nature, due to circumstances beyond the control of the person, or whether a temporary variance form the requirements of the plan should be granted;

(vii) Whether an approved conservation system is being used on a highly erodible field;

(viii) Whether the conversion of a wetland is for the purpose or has the effect of making the production of an agricultural commodity possible;

(ix) Whether a farmed wetland or farmed-wetland pasture is abandoned;

(x) Whether the planting of an agricultural commodity on a wetland is possible under natural conditions;

(xi) Whether maintenance of existing drainage of a wetland described in § 12.33 exceeds the scope and effect of the original drainage;

(xii) Whether a plan for the mitigation of a converted wetland will be approved and whether the mitigation of a converted wetland is accomplished according to the approved mitigation plan;

(xiii) Whether all technical information relating to the determination of a violation and severity of a violation has been provided to FSA for making payment-reduction determinations; and

(xiv) Whether or not a commenced-conversion activity was completed by January 1, 1995.

(3) NRCS may provide such other technical assistance for implementation of the provisions of this part as is determined to be necessary.

(4) A person may obtain a highly erodible land or a wetland scope-and-effect determination by making a written request on Form AD–1026. The determination will be made in writing, and a copy will be provided to the person.

(5) A determination of whether or not an area meets the highly erodible land criteria or whether wetland criteria, identified in accordance with the current Federal wetland delineation methodology in use at the time of the determination and that are consistent with current mapping conventions, may be made by the NRCS representative based upon existing records or other information and without the need for an on-site determination. This determination will be made by the NRCS representative as soon as possible following a request for such a determination.

(6) An on-site determination as to whether an area meets the applicable criteria shall be made by an NRCS representative if the person has disagreed with the determination made under paragraph (c)(5) of this section, or if adequate information is not otherwise available to an NRCS representative on which to make an off-site determination.

(7) An on-site determination, where applicable, will be made by the NRCS representative as soon as possible following a request for such a determination, but only when site conditions are favorable for the evaluation of soils, hydrology, or vegetation.

(8) With regard to wetland determinations, if an area is continuously inundated or saturated for long periods of time during the growing season to such an extent that access by foot to make a determination of predominance of hydric soils or prevalence of hydrophytic vegetation is not feasible, the area will be determined to be a wetland.

(9) Persons who are adversely affected by a determination made under this section and believe that the requirements of this part were improperly applied may appeal, under § 12.12 of this part, any determination by NRCS.

(d) *Administration by CSREES.* The CSREES shall coordinate the related information and education program for

USDA concerning implementation of this rule.

(e) *Assistance of other Federal agencies.* If NRCS determines, through agreement or otherwise, that the purposes of this part would be furthered by the assistance of other Federal agencies with wetland responsibilities, NRCS may accept such assistance and adopt any or all such actions by these agencies as an action by an NRCS representative under this part.

§ 12.7 Certification of compliance.

(a) *Self-certification.* In order for a person to be determined to be eligible for any of the benefits specified in § 12.4:

(1) It must be determined by USDA whether any field in which the person applying for the benefits has an interest and intends to produce an agricultural commodity contains highly erodible land;

(2) The person applying for or receiving the benefits must certify in writing on Form AD–1026 that such person will not produce an agricultural commodity on highly erodible land, or designate such land for conservation use; or plant an agricultural commodity on a converted wetland; or convert a wetland to make possible the production of an agricultural commodity during the crop year in which the person is seeking such benefits, unless such actions are exempt, under § 12.5, from the provisions of § 12.4 of this part;

(3) A person may certify application of practices required by the person's conservation plan. NRCS shall permit a person who makes such a certification with respect to a conservation plan to revise the conservation plan in any manner, if the same level of conservation treatment provided for by the conservation system under the person's conservation plan is maintained. NRCS may not revise the person's conservation plan without the concurrence of the person;

(4) The person applying for a FSA direct or guaranteed farm credit program loan must certify that such person shall not use the proceeds of the loan for a purpose that will contribute to excessive erosion on highly erodible land or to conversion of wetlands for the purpose, or to have the effect, of making the production of an agricultural commodity possible; and

(5) The person applying for the benefits must authorize and provide representatives of USDA access to all land in which such person has an interest for the purpose of verifying any such certification.

(b) *Availability to other agencies.* Each agency of USDA shall make all certifications of compliance received by such agency and the results of investigations concerning such certifications of compliance available to other agencies.

(c) *Compliance.* A certification made in accordance with this section does not relieve any person from compliance with provisions of this part.

§ 12.8 Affiliated persons.

(a) *Ineligibility of affiliated persons.* Ineligibility of an individual or entity under this part for benefits shall also be an ineligibility for benefits for ''affiliated persons'' as defined in this section.

(b) *Affiliated persons of an individual.* If the person requesting benefits is an individual, the affiliated persons are:

(1) The spouse and minor child of such person or guardian of such child; except that spouses who establish to the satisfaction of the COC that operations of the husband and wife are maintained separately and independently shall not be considered affiliates;

(2) Any partnership, joint venture, or other enterprise in which the person or any person listed in paragraphs (b)(1) has an ownership interest or financial interest; unless such interest is held indirectly through another business enterprise; or

(3) Any trust in which the individual, business enterprise, or any person listed in paragraph (b)(1) is a beneficiary or has a financial interest, unless such interest is held indirectly through another business enterprise.

(c) *Affiliated persons of an entity.* If the person who has requested benefits from USDA is a corporation, partnership, or other joint venture, the affiliated persons are any participant or stockholder therein of the corporation, partnership, or other joint venture, except for persons who have an indirect interest through another business enterprise in such corporation, partnership, or other joint venture or persons with a 20 percent or less share in a corporation.

(d) *Limitation.* Any reduction in payments which results only from the application of the affiliation provisions of this section to a partnership, joint venture, trust, or other enterprise shall be limited to the extent of interest held in such partnership, joint venture, trust, or other enterprise by the person or business enterprise that committed the violation. However, for violations for which the business enterprise is considered directly responsible under the provisions of this part, the business enterprise shall be subject to a full loss of benefits, including those instances in which the business enterprise has an interest in the land where the violation occurred or where the business enterprise had an interest in the crops produced on the land.

(e) *Avoidance of this part.* Limitations on affiliation shall not apply as needed to correct for any action that would otherwise tend to defeat the purposes of this part.

§ 12.9 Landlords and tenants.

(a) *Landlord eligibility.*

(1) Except as provided in paragraph (a)(2) of this section, the ineligibility of a tenant or sharecropper for benefits (as determined under § 12.4) shall not cause a landlord to be ineligible for USDA program benefits accruing with respect to land other than those in which the tenant or sharecropper has an interest.

(2) The provisions of paragraph (a)(1) of this section shall not be applicable to a landlord if the production of an agricultural commodity on highly erodible land or converted wetland by the landlord's tenant or sharecropper is required under the terms and conditions of the agreement between the landlord and such tenant or sharecropper and such agreement was entered into after December 23, 1985, or if the landlord has acquiesced in such activities by the tenant or sharecropper.

(b) *Tenant or renter eligibility.*

(1) The ineligibility of a tenant or renter may be limited to the program benefits listed in § 12.4(c) accruing with respect to only the farm on which the violation occurred if:

(i) The tenant or renter shows that a good-faith effort was made to comply by developing an approved conservation plan for the highly erodible land in a timely manner and prior to any violation of the provisions of this part; and

(ii) The owner of such farm refuses to apply such a plan and prevents the tenant or renter from implementing certain practices that are a part of the approved conservation plan; and

(iii) FSA determines that the lack of compliance is not a part of a scheme or device as described in § 12.10.

(2) If relief is granted under paragraph (b)(1) of this section, the tenant or renter must actively apply those conservation treatment measures that are determined to be within the control of the tenant or renter.

§ 12.10 Scheme or device.

All or any part of the benefits listed in § 12.4 otherwise due a person from USDA may be withheld or required to be refunded if the person adopts or participates in adopting any scheme or

device designed to evade, or which has the effect of evading, the provisions of this part. Such acts shall include, but are not limited to, concealing from USDA any information having a bearing on the application of the provisions of this part or submitting false information to USDA or creating entities for the purpose of concealing the interest of a person in a farming operation or to otherwise avoid compliance with the provisions of this part. Such acts shall also include acquiescence in, approval of, or assistance to acts which have the effect of, or the purpose of, circumventing these regulations.

§ 12.11 Action based upon advice or action of USDA.

The provisions of part 718 of this Title, as amended, relating to performance based upon the action or advice of a County Committee (COC) or State FSA Committee shall be applicable to the provisions of this part. In addition, if it is determined by the appropriate USDA agency that the action of a person which would form the basis of any ineligibility under this part was taken by such person in good-faith reliance on erroneous advice, information, or action of any other authorized representative of USDA, the appropriate agency may make such benefits available to the extent that similar relief would be allowed under 7 CFR part 718.

§ 12.12 Appeals.

Any person who has been or who would be denied program benefits in accordance with § 12.4 as the result of any determination made in accordance with the provisions of this part may obtain a review of such determination in accordance with the administrative appeals procedures of the agency which rendered such determination. Agency appeal procedures are contained in the Code of Federal Regulations as follows: FSA, part 780 of this title; NRCS, part 614 of this title; Rural Utilities Service, part 1900, subpart B of this title.

Subpart B—Highly Erodible Land Conservation

§ 12.20 NRCS responsibilities regarding highly erodible land.

In implementing the provisions of this part, NRCS shall, to the extent practicable:

(a) Develop and maintain criteria for identifying highly erodible lands;

(b) Prepare and make available to the public lists of highly erodible soil map units;

(c) Make soil surveys for purposes of identifying highly erodible land; and

(d) Provide technical guidance to conservation districts which approve conservation plans and systems, in consultation with local county FSA committees, for the purposes of this part.

§ 12.21 Identification of highly erodible lands criteria.

(A) *Basis for identification as highly erodible.* Soil map units and an erodibility index will be used as the basis for identifying highly erodible land. The erodibility index for a soil is determined by dividing the potential average annual rate of erosion for each soil by its predetermined soil loss tolerance (T) value. The T value represents the maximum annual rate of soil erosion that could occur without causing a decline in long-term productivity. The equation for measuring erosion is described below.

(1) The potential average annual rate of sheet and rill erosion is estimated by multiplying the following factors of the Universal Soil Loss Equation (USLE):

(i) Rainfall and runoff (R);

(ii) The degree to which the soil resists water erosion (K); and

(iii) The function (LS), which includes the effects of slope length (L) and steepness (S).

(2) The potential average annual rate of wind erosion is estimated by multiplying the following factors of the Wind Erosion Equation (WEQ): Climatic characterization of windspeed and surface soil moisture (C) and the degree to which soil resists wind erosion (I).

(3) The USLE is explained in the U.S. Department of Agriculture Handbook 537, ''Predicting Rainfall Erosion Losses.'' The WEQ is explained in the paper by Woodruff, N.P., and F. H. Siddaway, 1965, ''A Wind Erosion Equation,'' Soil Science Society of America Proceedings, Vol. 29. No. 5, pages 602–608. Values for all the factors used in these equations are contained in the NRCS field office technical guide and the references which are a part of the guide. The Universal Soil Loss Equation, the Revised Universal Soil Loss Equation, and the Wind Erosion Equation and the rules under which NRCS uses the equations are published at §§ 610.11 through 610.15 of this title.

(b) *Highly erodible.* A soil map unit shall be determined to be highly erodible if either the RKLS/T or the CI/T value for the map unit equals or exceeds 8.

(c) *Potentially highly erodible.* Whenever a soil map unit description contains a range of a slope length and steepness characteristics that produce a range of LS values which result in RKLS/T quotients both above and below 8, the soil map unit will be entered on the list of highly erodible soil map units as ''potentially highly erodible.'' The final determination of erodibility for an individual field containing these soil map unit delineations will be made by an on-site investigation.

§ 12.22 Highly erodible field determination criteria.

(a) *Predominance.* Highly erodible land shall be considered to be predominant on a field if either:

(1) 33.33 percent or more of the total field acreage is identified as soil map units which are highly erodible; or

(2) 50 or more acres in such field are identified as soil map units which are highly erodible.

(b) *Modification of field boundaries.* A person may request the modification of field boundaries for the purpose of excluding highly erodible land from a field. Such a request must be submitted to, and is subject to the approval of, FSA. FSA shall use the technical determination of NRCS in approving this request.

(C) *Impact of changing field boundaries.* When field boundaries are changed to include areas of land that were included in a field that was previously determined to be predominately highly erodible according to paragraph (a) of this section, such areas shall continue to be subject to the requirements for predominately highly erodible fields, except as provided in paragraph (b) of this section.

(d) *Small area of noncropland.* Small areas of noncropland within or adjacent to the boundaries of existing highly erodible crop fields such as abandoned farmsteads, areas around filled or capped wells, rock piles, trees, or brush which are converted to cropland are considered to meet the requirement of § 12.5(a)(2) if they are included in an approved conservation plan for the entire highly erodible field.

§ 12.23 Conservation plans and conservation systems.

(a) *Use of field office technical guide.* A conservation plan or conservation system developed for the purposes of § 12.5(a) must be based on, and to the extent practicable conform with, the NRCS field office technical guide in use at the time the plan is developed or revised. For highly erodible croplands which were used to produce agricultural commodities prior to December 23, 1985, the applicable conservation systems in the field office technical guide are designed to achieve substantial reductions in soil erosion. Conservation systems shall be

technically and economically feasible; based on local resource conditions and available conservation technology; cost-effective; and shall not cause undue economic hardship on the person applying the conservation system. Any conservation plans or systems that were approved prior to July 3, 1996, are deemed to be in compliance with this paragraph.

(b) *Substantial reduction in soil erosion.* For the purpose of determining whether there is a substantial reduction in soil erosion on a field containing highly erodible cropland which was used to produce an agricultural commodity prior to December 23, 1985, the measurement of erosion reduction achieved by applying a conservation plan or system shall be based on a comparison of the estimated annual level of erosion that is expected to occur on that portion of the field for which a conservation plan or system was developed and is being applied, to the estimated annual level of erosion that existed on that same portion of the field before the application of a conservation plan or system. On a field that is converted from native vegetation after July 3, 1996, and where any crop production will result in increased erosion, in no case will the required conservation plan or system permit a substantial increase in erosion.

(c) *Field trials.* NRCS may allow a person to include in the person's conservation plan or a conservation system under the plan, on a field-trial basis, practices that are not currently approved but that NRCS considers have a reasonable likelihood of success. These trials must have prior approval by NRCS, and must be documented in the person's conservation plan specifying the limited time period during which the field trial is in effect. If, at the end of the conservation field trial period, NRCS finds that the practice does not meet conservation compliance requirements, the person will not be ineligible for USDA program benefits during the period of the field trial.

(d) *Highly erodible land previously under a Conservation Reserve Program contract.* Any person who owns or operates highly erodible land that was under a Conservation Reserve Program contract as authorized by section 1231 of the Food Security Act of 1985, as amended, shall have 2 years after the expiration of termination of the contract to fully apply a conservation system if the conservation plan for such land requires the installation of structural measures for the production of an agricultural commodity. NRCS officials may extend this period one additional year for circumstances beyond the control of the person. The person shall not be required to meet a higher conservation standard than the standard applied to other highly erodible cropland located within the area served by the field office technical guide for the area in which the field is located.

(e) *Information regarding conservation options.* NRCS, in providing assistance to a person for the preparation or revision of a conservation plan under this part, will provide such person with information concerning cost-effective and applicable erosion control alternatives, crop flexibility, or other conservation assistance options that may be available.

(f) *Timely request for assistance.* Persons who require NRCS assistance for the development of a conservation plan or the installation of a conservation system are encouraged to request this assistance well in advance of deadline dates for compliance; otherwise the person may not be able to comply with these provisions and maintain eligibility for USDA program benefits.

(g) *Action by conservation districts.* Conservation districts approve or disapprove conservation plans or conservation systems after NRCS determines that the plans or systems conform to the NRCS field office technical guide. If a conservation district fails, without due cause, to act on a request for conservation plan or conservation system approval within 45 days, or if no conservation district exists, NRCS will approve or disapprove, as appropriate, the conservation plan or system in question.

(h) *Application of a conservation plan or system.* A person is considered to be applying a conservation plan for purposes of § 12.5(a) if the conservation system or plan being applied achieves or exceeds the substantial reduction in soil erosion as described in paragraph (b) which the conservation system or plan was designed to achieve. It is the responsibility of the person to:

(1) Certify that the conservation plan or system is being applied; and

(2) Arrange for a revision of the conservation plan with NRCS, if changes are made in land use, crop rotation or management, conservation practices, or in the original schedule of practice installation that would affect the achievement of substantial reduction in soil erosion in a given crop year.

(i) *Appeal to FSA.* Persons who are adversely affected by the determinations made under this subpart and believe that the requirements of this subpart were improperly applied may appeal the decision to FSA under § 12.12.

(j) *Undue economic hardship.* After a technical determination has been made, the FSA county committee shall, if a person asserts that the application of the person's conservation system would impose an undue economic hardship on the person, make a recommendation to the State FSA Committee as to whether or not the application of the conservation system would impose an undue economic hardship. The State FSA Committee may provide the person with a variance on the basis of the hardship. Under this variance, and any conditions that may be required in the variance, the person will be considered to be in compliance with the applicable provisions of this part. The State FSA Committee will consider relevant factors, such as the cost of installation of required conservation practices and benefits earned through programs subject to compliance with this part, and the person's general economic situation.

Subpart C—Wetland Conservation

§ 12.30 NRCS responsibilities regarding wetlands.

(a) *Technical and coordination responsibilities.* In carrying out the provisions of this part, NRCS shall:

(1) Oversee the development and application of criteria to identify hydric soils in consultation with the National Technical Committee for Hydric Soils and make available to the public an approved county list of hydric soil map units, which is based upon the National List of Hydric Soils;

(2) Coordinate with the U.S. Fish and Wildlife Service and others in updating the National List of Plant Species that Occur in Wetlands;

(3) Make or approve wetland determinations, delineations and certifications, functional assessments, mitigation plans, categorical minimal effects, and other technical determinations relative to the implementation of the wetland conservation provisions of this part;

(4) Develop and utilize off-site and on-site wetland identification procedures;

(5) Assure quality of service and determinations through procedures developed by NRCS in consultation with other Federal agencies that have wetland responsibilities;

(6) Investigate complaints and make technical determinations regarding potential violations;

(7) Develop a process at the state level, in coordination with the U.S. Fish and Wildlife Service, to ensure that these provisions are carried out in a technically defensible and timely

manner, seek assistance as appropriate, and annually review the progress being made on implementation; and

(8) Conduct reviews of implementation and provide the Army Corps of Engineers, Environmental Protection Agency, and the U.S. Fish and Wildlife Service an opportunity to participate in this review.

(b) *Technical assistance from others* In carrying out the provisions of this part, NRCS may request technical assistance from the U.S. Fish and Wildlife Service, State or local agencies conservation districts, or qualified private entities when NRCS determines that additional staff resources or technical expertise are needed to address adequately the requirements of this part or to enhance the quality of implementation of this part.

(c) *Certification of wetland determinations and wetland delineations.*

(1) Certification of a wetland determination means that the wetland determination is of sufficient quality to make a determination of ineligibility for program benefits under § 12.4 of this part. Certification of a wetland determination shall be completed according to delineation procedures agreed to by the Army Corps of Engineers, the Environmental Protection Agency, the U.S. Fish and Wildlife Service and NRCS. NRCS may certify a wetland determination without making a field investigation. NRCS will notify the person affected by the certification and provide an opportunity to appeal the certification prior to the certification becoming final. All wetland determinations made after July 3, 1996, will be done on a tract basis and will be considered certified wetland determinations. A not-inventoried designation within a certified wetland is subject to change when the soil, hydrology, and vegetation evaluation is completed and identified as to type of wetland or as a non-wetland. This change from a not-inventoried designation to an approved wetland designation will be done at the request of the landowner or during a formal investigation of a potential violation.

(2) The wetland determination and wetland delineation shall be certified as final by the NRCS official 30 days after providing the person notice of certification or, if an appeal is filed with USDA, after the administrative appeal procedures are exhausted.

(3) In the case of an appeal, NRCS will review and certify the accuracy of the determination of all lands subject to the appeal to ensure that the subject lands have been accurately delineated. Prior to a decision being rendered on the appeal, NRCS will conduct an on-site investigation of the subject land.

(4) Before any benefits are withheld, an on-site investigation of a potential wetland violation will be made by NRCS. The affected person will be provided an opportunity to appeal the on-site determination to USDA if the on-site determination differs from the original determination. Such action by NRCS shall be considered a review of the prior determination and certification of the delineation. If the prior determination was a certified wetland determination, an appeal of the NRCS on-site determination shall be limited to the determination that the wetland was converted in violation of this part.

(5) A copy of the information from the final certified wetland determination and the wetland delineation shall be recorded on official USDA aerial photography, digital imagery, or other graphic representation of the area.

(6) As long as the affected person is in compliance with the wetland conservation provision of this part, and as long as the area is devoted to the use and management of the land for production of food, fiber, horticultural crops, a certification made under this section will remain valid and in effect until such time as the person affected by the certification requests review of the certification by NRCS. A person may request review of a certification only if a natural event alters the topography or hydrology of the subject land to the extent that the final certification is no longer a reliable indication of site conditions, or if NRCS concurs with an affected person that an error exists in the current wetland determination

§ 12.31 On-site wetland identification criteria.

(a) *Hydric soils.*

(1) NRCS shall identify hydric soils through the use of published soil maps which reflect soil surveys completed by NRCS or through the use of on-site reviews. If a published soil map is unavailable for a given area, NRCS may use unpublished soil maps which were made according to the specifications of the National Cooperative Soil Survey or may conduct an on-site evaluation of the land.

(2) NRCS shall determine whether an area of a field or other parcel of land has a predominance of hydric soils that are inundated or saturated as follows:

(i) If a soil map unit has hydric soil as all or part of its name, that soil map unit or portion of the map unit related to the hydric soil shall be determined to have a predominance of hydric soils;

(ii) If a soil map unit is named for a miscellaneous area that meets the criteria for hydric soils (i.e., riverwash, playas, beaches, or water) the soil map unit shall be determined to have a predominance of hydric soils; or

(iii) If a soil map unit contains inclusions of hydric soils, that portion of the soil map unit identified as hydric soil shall be determined to have a predominance of hydric soils.

(3) *List of hydric soils.*

(i) Hydric soils are those soils which meet criteria set forth in the publication ''Hydric Soils of the United States 1985'' which was developed by the National Technical Committee for Hydric Soils and which is incorporated by reference. This publication may be obtained upon request by writing NRCS at U.S. Department of Agriculture, P.O. Box 2890, Washington, DC 20013, and is available for inspection at the Office of the Federal Register Information Center, 800 North Capitol Street NW., Suite 700, Washington, DC 20408. Incorporation of this publication by reference was approved by the Director of the Federal Register on June 24, 1986. The materials are incorporated as they exist on the date of the approval and a notice of any change in these materials will be published in the Federal Register.

(ii) An official list of hydric soil map units shall be maintained at the local NRCS office and shall include—

(A) All soils from the National List of Hydric Soils that can be found in that field office area, and

(B) Any soil map units or areas which the state conservationist determines to meet such hydric soil criteria.

(iii) Any deletions of a hydric soil unit from the hydric soil map unit list must be made according to the established procedure contained in the publication ''Hydric Soils of the United States 1985'' for adding or deleting soils from the National List of Hydric Soils.

(b) *Hydrophytic vegetation.* Hydrophytic vegetation consists of plants growing in water or in a substrate that is at least periodically deficient in oxygen during a growing season as a result of excessive water content.

(1) A plant shall be considered to be a plant species that occurs in wetland if such plant is listed in the National List of Plant Species that Occur in Wetlands. The publication may be obtained upon request from the U.S. Fish and Wildlife Service at National Wetland Inventory, Monroe Bldg. Suite 101, 9720 Executive Center Drive, St. Petersburg, Florida 33702.

(2) For the purposes of the definition of ''wetland'' in § 12.2 of this part, land shall be determined to have a prevalence of hydrophytic vegetation if:

(i) NRCS determines through the criteria specified in paragraph (b)(3) of

this section that under normal circumstances such land supports a prevalence of hydrophytic vegetation. The term ''normal circumstances'' refers to the soil and hydrologic conditions that are normally present, without regard to whether the vegetation has been removed; or

(ii) In the event the vegetation on such land has been altered or removed, NRCS will determine if a prevalence of hydrophytic vegetation typically exists in the local area on the same hydric soil map unit under non-altered hydrologic conditions.

(3) The determination of prevalence of hydrophytic vegetation will be made in accordance with the current Federal wetland delineation methodology in use by NRCS at the time of the determination.

(c) *Mitigation wetlands.* Notwithstanding the provisions of this section, wetlands which are created in order to mitigate the loss of other wetlands as a result of irrigation, recreation, municipal water, flood control, or other similar projects shall not be considered to be artificial wetland for the purposes of § 12.5(b)(1)(vii)(A) of this part.

(d) *Minimal effect determination.* For the purposes of § 12.5(b)(1)(v) of this part, NRCS shall determine whether the effect of any action of a person associated with the conversion of a wetland, the conversion of wetland and the production of an agricultural commodity on converted wetland, or the combined effect of the production of an agricultural commodity on a wetland converted by someone else has a minimal effect on the functions and values of wetlands in the area. Such determination shall be based upon a functional assessment of functions and values of the wetland under consideration and other related wetlands in the area, and will be made through an on-site evaluation. A request for such determination will be made prior to the beginning of activities that would convert the wetland. If a person has converted a wetland and then seeks a determination that the effect of such conversion on wetland was minimal, the burden will be upon the person to demonstrate to the satisfaction of NRCS that the effect was minimal.

The production of an agricultural commodity on any portion of a converted wetland in conformance with a minimal-effect determination by NRCS is exempt under § 12.5(b)(1)(v) of this part. However, any additional action of a person that will change the functions and values of a wetland for which a minimal-effect determination has been made shall be reported to NRCS for a determination of whether the effect continues to be minimal. The loss of a minimal effect determination will cause a person who produces an agricultural commodity on the converted wetland after such change in status to be ineligible, under § 12.4, for certain program benefits. In situations where the wetland functions and values are replaced by the restoration, enhancement or creation of a wetland in accordance with a mitigation plan approved by NRCS, the exemption provided by the determination will be effective after NRCS determines that all practices in a mitigation plan are being implemented.

(e) *Categorical Minimal Effect Exemptions.*

(1) The state conservationist, in consultation with the state technical committee established under 16 U.S.C. 3861, shall identify any categories of conversion activities and conditions which are routinely determined by NRCS to have minimal effect on wetland functions and values, as described in paragraph (d) of this section, and recommend to the Chief, NRCS, or a designee, inclusion on a list of categorical minimal effect exemptions.

(2) The Chief, or designee, shall evaluate the conversion practices recommended by the state conservationists in the region to ensure consistency across State and regional lines, and to determine whether any categories of conversion activities identified pursuant to paragraph (e)(1) of this section, if such activities were exempt from the ineligibility provisions of § 12.4, would only have a minimal effect on wetland functions and values in a wetland system within the region.

(3) Any categories of conversion activities which meet the criteria of paragraph (e)(2) of this section will be published in the Federal register for inclusion in this part and shall be exempt under § 12.5(b)(1)(v) of this part.

(4) The NRCS local field office shall maintain a list of any activities and conditions which are determined by the Chief, or designee, exempt pursuant to this section and will provide the list to a person upon request.

§ 12.32 Converted wetland identification criteria.

(a) Converted wetland shall be identified by determining whether the wetland was altered so as to meet the definition of converted wetland. In making this determination, the following factors are to be considered:

(1) Where hydric soils have been used for production of an agricultural commodity and the effect of the drainage or other altering activity is not clearly discernible, NRCS will compare the site with other sites containing the same hydric soils in a natural condition to determine if the hydric soils can or cannot be used to produce an agricultural commodity under natural conditions. If the soil on the comparison site could not produce an agricultural commodity under natural conditions, the subject wetland will be considered to be converted wetland.

(2) Where woody hydrophytic vegetation has been removed from hydric soils for the purpose of or permitting the production of an agricultural commodity, the area will be considered to be converted wetland.

(b) A wetland shall not be considered to be converted if:

(1) Production of an agricultural commodity on such land is possible as a result of a natural condition, such as drought, and it is determined that the actions of the person producing such agricultural commodity does not permanently alter or destroy natural wetland characteristics. Destruction of herbaceous hydrophytic vegetation (i.e., plants other than woody shrubs or trees) as a result of the production of an agricultural commodity shall not be considered as altering or destroying natural wetland characteristic if such vegetation could return following cessation of the natural condition which made production of the agricultural commodity possible; or

(2) Such land is correctly identified as farmed wetland or farmed-wetland pasture.

§ 12.33 Use of wetland and converted wetland.

(a) The provisions of § 12.32(b)(2) are intended to protect remaining functions and values of the wetlands described therein. Persons may continue to farm such wetlands under natural conditions or as they did prior to December 23, 1985. However, no action can be taken to increase effects on the water regime beyond that which existed on such lands on or before December 23, 1985, unless NRCS determines the effect on losing remaining wetland values would be minimal under § 12.5(b)(1)(v). If, after December 23, 1985, changes due to human activity occurred in the watershed and resulted in an increase in the water regime on a person's land, the person may be allowed to adjust the existing drainage system to accommodate the increased water regime on the condition that the person affected by this additional water provides NRCS with appropriate documentation of the increased water regime, the causes thereof, and the

planned changes in the existing drainage system. In order to maintain program eligibility, a person must provide sufficient documentation and receive approval from NRCS prior to making any changes that will have the effect of increasing the capacity of the existing drainage systems.

(b) Unless otherwise provided in this part, the production of an agricultural commodity on land determined by NRCS to be prior-converted cropland is exempted by law from these regulations for the area which was converted. Maintenance or improvement of drainage systems on prior-converted croplands are not subject to this rule so long as the prior-converted croplands are used for the production of food, forage, or fiber and as long as such actions do not alter the hydrology of nearby wetlands or do not make possible the production of an agricultural commodity on these other wetlands. Other wetlands under this section means any natural wetland, farmed wetland, farmed-wetland pasture, or any converted wetland that is not exempt under § 12.5 of this part.

(c) Abandonment is the cessation for five consecutive years of management or maintenance operations related to the use of a farmed wetland or a farmed-wetland pasture. Unless the criteria for receiving an exemption under § 12.5(b)(1)(iii) are met, such land is considered to be abandoned when the land meets the wetland criteria of § 12.31. In order for documentation of site conditions to be considered adequate under § 12.5(b)(1)(iii), the affected person must provide to NRCS available information concerning the extent of hydrological manipulation, the extent of woody vegetation, and the history of use. In accordance with § 12.5(b)(1)(iii), participation in a USDA approved wetland restoration, set-aside, diverted acres, or similar programs shall not be deemed to constitute abandonment.

(d) The maintenance of the drainage capacity or any alteration or manipulation, including the maintenance of a natural waterway operated and maintained as a drainage outlet, that affects the circulation and flow of water made to a farmed wetland or farmed-wetland pasture would not cause a person to be determined to be ineligible under this part, provided that the maintenance does not exceed the scope and effect of the original alteration or manipulation, as determined by NRCS, and provided that the area is not abandoned. Any resultant conversion of wetlands is to be at the minimum extent practicable, as determined by NRCS.

§ 12.34 Paperwork Reduction Act assigned number.

The information collection requirements contained in this regulation (7 CFR part 12) have been approved by the Office of Management and Budget under provisions of 44 U.S.C. chapter 35 and have been assigned OMB Number 0560–0004.

Signed at Washington, D.C. on August 23, 1996.

Dan Glickman,

Secretary.

[FR Doc. 96–22784 Filed 9–5–96; 8:45 am]

BILLING CODE 3410–01–M

Agricultural Marketing Service

7 CFR Part 1075

[DA–96–12]

Milk in the Black Hills, South Dakota, Marketing Area; Termination of the Order

AGENCY: Agricultural Marketing Service, USDA.

ACTION: Final rule; termination order.

SUMMARY: This document terminates all but certain administrative sections of the order regulating the handling of milk in the Black Hills, South Dakota, marketing area. Termination of this order was requested by Black Hills Milk Producers, a cooperative association that represents all of the producers whose milk is pooled under the order. Thus, termination of the order is required under the Agricultural Marketing Agreement Act of 1937, as amended.

EFFECTIVE DATE: October 1, 1996.

FOR FURTHER INFORMATION CONTACT: Clifford M. Carman, Marketing Specialist, USDA/AMS/Dairy Division, Order Formulation Branch, Room 2971, South Building, P.O. Box 96456, Washington, DC 20090–6456, (202) 720–9368.

SUPPLEMENTARY INFORMATION: The Department is issuing this rule in conformance with Executive Order 12866.

This termination order has been reviewed under Executive Order 12988, Civil Justice Reform. This action is not intended to have retroactive effect. This rule will not preempt any state or local laws, regulations, or policies, unless they present an irreconcilable conflict with this rule.

The Agricultural Marketing Agreement Act of 1937, as amended (7 U.S.C. 601–674), provides that administrative proceedings must be exhausted before parties may file suit in court. Under section 608c(15)(A) of the Act, any handler subject to an order may file with the Secretary a petition stating that the order, any provision of the order, or any obligation imposed in connection with the order is not in accordance with the law and requesting a modification of an order or to be exempted from the order. A handler is afforded the opportunity for a hearing on the petition. After a hearing, the Secretary would rule on the petition. The Act provides that the District Court of the United States in any district in which the handler is an inhabitant, or has its principal place of business, has jurisdiction in equity to review the Secretary's ruling on the petition, provided a bill in equity is filed not later than 20 days after the date of the entry of the ruling.

This order of termination is issued pursuant to the provisions of the Agricultural Marketing Agreement Act and of the order regulating the handling of milk in the Black Hills, South Dakota, marketing area.

Small Business Consideration

During June 1996, the representative period determined for this action, 58 producers (all members of the Black Hills Milk Producers cooperative association) had their milk pooled under the Black Hills order. The Small Business Administration (SBA) criterion of $500,000 in annual receipts, adjusted to reflect the information for one month ($500,000 divided by 12, divided by the 1995 average order blend price of $13.95 per hundredweight) was used to determine that dairy farmers marketing less than 300,000 pounds of milk meet the description of a small dairy farm. On the basis of the pounds of milk marketed during the representative period, 54 of the 58 dairy farmers would be small businesses. Of these, 27 marketed less than 100,000 pounds during June, 20 marketed between 100,000 and 200,000 pounds, and 7 marketed between 200,000 and 300,000 pounds.

In addition to the cooperative, there is one other milk handler regulated under the Black Hills order in South Dakota. Under SBA criterion, this handler would be considered a small business. Consequently, nearly all of the parties affected by the Black Hills milk order would be classified as small entities.

The current reporting, recordkeeping and other compliance requirements of the rule would cease with termination of the order. None of the currently-affected entities would be subject to any additional reporting or recordkeeping requirements for purposes of the Federal milk order program as a result of the

order's termination. However, a handler would continue to be required to maintain records of milk receipts and sales into another Federal order marketing area and report them to the market administrator of the other marketing area. In addition, if a handler's sales into another Federal order marketing area become a large enough percentage of a handler's milk receipts, a handler would be pooled under another order and incur the same reporting, recordkeeping and payment obligations it currently has under the Black Hills order.

Termination of the order will remove government enforcement of minimum prices to handlers and to producers that are determined by supply and demand conditions. It will also remove other stabilizing features of the regulatory program such as: an impartial audit of handler records to insure payment to dairy farmers and to verify the reported uses of milk; the assurance to farmers of accurate weighing, testing, classification and accounting for milk; and the existence of marketing information to evaluate market performance. Thus, it is likely that market conditions would tend to become less orderly or stable. However, it must be assumed that the consequences of the removal of the regulatory program have been considered by the cooperative association that has requested the action, and that possibly other approaches have or will be made to replace the stabilizing influence of the order.

Regardless of the possible economic effects of the order termination on the small entities involved, a termination is required by the Agricultural Marketing Agreement Act of 1937, as amended, whenever a termination is requested by a majority of the producers engaged in the production of milk for sale in the marketing area in a representative period determined by the Secretary. Black Hills Milk Producers, as the cooperative association representing all of the producers whose milk is pooled under the Black Hills milk order, has requested that the order be terminated.

Determination

It is hereby determined that termination of the Black Hills, South Dakota, order, Part 1075, is favored by a majority of the producers engaged in the production of milk for sale in the marketing area in the representative period, determined to be June 1996, and that such producers produced more than 50 percent of the milk produced for sale in the Black Hills, South Dakota, milk marketing area in such representative period.

It is also determined that notice of proposed rule making and public procedure thereon is impracticable, unnecessary and contrary to the public interest. Section 608(c)(16)(B) of the Agricultural Marketing Agreement Act of 1937, as amended, requires that if a majority of the producers engaged in the production of milk for sale in the marketing area in a representative period determined by the Secretary favor termination of the order, and such producers produced more than 50 percent of the milk produced for sale in the marketing area in the representative period, that such order shall be terminated. It is therefore necessary that the provisions of the order, as amended, subject to specific exceptions, be terminated effective October 1, 1996.

List of Subjects in 7 CFR Part 1075

Milk marketing orders.

Order

Pursuant to the provisions of the Agricultural Marketing Agreement Act of 1937, as amended (7 U.S.C. 601 *et seq.*) it is hereby ordered that all provisions of the order, as amended, regulating the handling of milk in the Black Hills, South Dakota, marketing area (7 CFR Part 1075) except § 1075.1, which incorporates the General Provisions in Part 1000, are hereby terminated effective October 1, 1996.

Milk marketing orders.

For the reason set forth in the preamble, 7 CFR Part 1075 is amended as follows:

PART 1075—MILK IN THE BLACK HILLS, SOUTH DAKOTA, MARKETING AREA

1. The authority citation for 7 CFR Part 1075 continues to read as follows:

Authority: (Secs. 1–19, 48 Stat. 31, as amended; 7 U.S.C. 601–674).

§§ 1075.2 through 1075.85 [Removed]

2. In part 1075 §§ 1075.2 through 1075.85 and their undesignated center headings are removed effective October 1, 1996.

Dated: August 30, 1996.

Michael V. Dunn,

Assistant Secretary, Marketing and Regulatory Programs.

[FR Doc. 96–22786 Filed 9–5–96; 8:45 am]

BILLING CODE 3410–02–P

DEPARTMENT OF JUSTICE

Immigration and Naturalization Service

8 CFR Part 103

[AG Order No. 2054–96; INS No. 1792–96]

RIN 1115–AE51

Definition of the Term Lawfully Present in the United States for Purposes of Applying for Title II Benefits Under Section 401(b)(2) of Public Law 104–193

AGENCY: Immigration and Naturalization Service, Justice.

ACTION: Interim rule with request for comments.

SUMMARY: This interim rule amends the Immigration and Naturalization Service (Service) regulations to define the term ''an alien who is lawfully present in the United States'' so that the Social Security Administration may determine which aliens in the United States are eligible for benefits under title II of the Social Security Act. Aliens who are considered ''lawfully present in the United States,'' however, must otherwise satisfy the requirements for benefits under title II of the Social Security Act in order to receive social security benefits.

DATES: This rule is effective September 6, 1996. Written comments must be received on or before November 5, 1996.

ADDRESSES: Please submit written comments, in triplicate, to the Director, Policy Directives and Instructions Branch, Immigration and Naturalization Service, 425 I Street, NW., Room 5307, Washington, DC 20536. To ensure proper handling, please reference INS number 1792–96 on your correspondence. Comments are available for public inspection at this location by calling (202) 514–3048 to arrange an appointment.

FOR FURTHER INFORMATION CONTACT: Derek C. Smith, Assistant General Counsel, Office of the General Counsel; or Sophia Cox, Adjudications Officers, Adjudications Division; Immigration and Naturalization Service, 425 I Street, NW., Room 3214, Washington, DC 20536, telephone (202) 514–2895 or (202) 514–5014.

SUPPLEMENTARY INFORMATION: On August 22, 1996, the President signed the Personal Responsibility and Work Opportunity Reconciliation Act of 1996 (Personal Responsibility Act), Pub. L. 104–193. Section 401(a) of the Personal Responsibility Act provides that, subject to limited exceptions, only ''qualified aliens,'' as defined under section 431, may receive Federal public benefits,

including retirement, welfare, health, disability, public or assisted housing, postsecondary education, food assistance, and unemployment benefits, among others.

Section 431(b) of the Personal Responsibility Act defines the term ''qualified alien'' to mean the following six groups of aliens:

(1) Aliens who are lawfully admitted for permanent residence under the Immigration and Nationality Act (Act);

(2) Aliens who are granted asylum under section 208 of the Act;

(3) Refugees admitted into the United States under section 207 of the Act;

(4) Aliens who are paroled into the United States under section 212(d)(5) of the Act for a period of at least 1 year;

(5) Aliens whose deportation is being withheld under section 243(h) of the Act; and

(6) Aliens who are granted conditional entry pursuant to section 203(a)(7) of the Act as in effect prior to April 1, 1980.

Section 401(b)(2) of the Personal Responsibility Act, however, provides an exception, which allows aliens who are ''lawfully present in the United States,'' as determined by the Attorney General, to receive benefits under title II of the Social Security Act. (Title II benefits include, for example, retirement benefits.) The purpose of this regulation, therefore, is to define the term ''an alien who is lawfully present in the United States,'' as required under section 401(b)(2) of the Personal Responsibility Act, thereby enabling the Social Security Administration to determine whether aliens who are not ''qualified aliens'' are eligible to receive title II benefits, if they are lawfully present in this country. This definition is made solely for the purpose of determining an alien's eligibility for payment of title II social security benefits, as required under section 401(b)(2) of the Personal Responsibility Act, and is not intended to confer any immigration status or benefit under the Immigration and Nationality Act.

In determining which aliens are lawfully present for the purposes of section 401(b)(2) of Public Law 104–193, the Service had to distinguish among many classes of aliens in the United States. The characteristic common to all the classes of aliens defined as ''lawfully present in the United States'' is that their presence in the United States has been sanctioned by a policy determination that a particular class of aliens should be allowed to remain in the United States, and that policy determination has almost always been implemented by an official act having the force of law. Each of the five categories defined as lawfully present fits within this rationale. First, the Service has concluded that Congress intended for qualified aliens, as defined in section 431(b) of the Personal Responsibility Act, to be included in the definition of lawfully present. Second, aliens who have been inspected and admitted to the United States and have not violated their status are lawfully present under the terms of the Immigration and Nationality Act. Third, an alien who has been paroled into the United States is lawfully present pursuant to section 212(d)(5) of the Act. However, persons who are paroled in order to determine whether or not they must be excluded under the Act are not lawfully present because no determination has been made as to the lawfulness of their presence, and they are allowed into the United States to avoid having to keep them in detention while they wait proceedings. Fourth, aliens who belong to one of the seven classes of aliens listed in section 103.12(a)(4) of this rule have been permitted to remain in the United States either by an act of Congress or through some other policy determination affecting that class of aliens. Aliens in temporary resident status pursuant to section 210 or 245A of the Act, aliens under Temporary Protected Status (TPS) pursuant to section 244A of the Act, and Family Unity beneficiaries pursuant to section 301 of Pub. L. 101–649 are all in lawful status under the Act. Cuban-Haitian entrants, aliens in deferred action status, aliens under Deferred Enforced Departure, and aliens who are the spouses and children of a United States citizen with an approved visa petition all remain in the United States under a Presidential or administrative policy that permits them to do so. Finally, applicants for asylum and withholding of deportation are permitted to remain in the United States because section 208(a) of the Act requires the Attorney General to create a procedure for adjudicating claims for asylum made by aliens physically present in the United States. Section 208(a) of the Act was passed to implement the obligations of the United States under the Convention Relating to the Status of Refugees, of July 28, 1951, as incorporated into the Protocol Relating to the Status of Refugees, of January 31, 1967.

Good Cause Exception

This interim rule is effective upon publication in the Federal Register although the Service invites post-promulgation comments and will address any such comments in a final rule. For the following reasons, the Service finds that good cause exists for adopting this rule without the prior notice and comment period ordinarily required by 5 U.S.C. 553(b). Section 401(b)(2) of Pub. L. 104–193 requires the Attorney General to define the term ''an alien lawfully present in the United States'' so that the Social Security Administration can determine which aliens are eligible for payment of title II social security benefits under the terms of the Social Security Act. Absent a definition of ''an alien lawfully present in the United States,'' section 401(a) of Pub. L. 104–193 requires the Social Security Administration to suspend payments under title II for aliens who are not ''qualified aliens'' (as defined under section 431(b)) and who file applications on or after September 1, 1996. It is therefore impracticable to adopt this rule with the prior notice and comment period normally required under 5 U.S.C. 553(b).

Regulatory Flexibility Act

The Attorney General, in accordance with the Regulatory Flexibility Act (5 U.S.C. 605(b)), has reviewed this regulation and, by approving it, certifies that this rule will not have a significant economic impact on a substantial number of small entities, because this regulation affects individuals, not small entities.

Executive Order 12866

This interim rule is considered by the Department of Justice, Immigration and Naturalization Service, to be a ''significant regulatory action'' under E.O. 12866, section 3(f), Regulatory Planning Review, and it has been submitted to the Office of Management and Budget for review under E.O. 12866.

Executive Order 12988

This interim rule meets the applicable standards set forth in sections 3(a) and 3(b)(2) of E.O. 12988.

Executive Order 12612

This regulation will not have a substantial direct effect on the States, on the relationships between the National government and the States, or on the distribution of power and responsibilities among the various levels of government. Therefore, in accordance with E.O. 12612, it is determined that this rule does not have sufficient Federalism implications to warrant the preparation of a Federalism Assessment.

List of Subjects in 8 CFR Part 103

Administrative practice and procedure, Authority delegations

(Government agencies), Freedom of Information, Privacy, Reporting and recordkeeping requirements, Surety bonds.

Accordingly, part 103 of chapter I of title 8 of the Code of Federal Regulations is amended as follows:

PART 103—POWERS AND DUTIES OF SERVICE OFFICERS; AVAILABILITY OF SERVICE RECORDS

1. The authority citation for part 103 continues to read as follows:

Authority: 5 U.S.C. 552, 552(a); 8 U.S.C. 1101, 1103, 1201, 1252 note, 1252b, 1304, 1356; 31 U.S.C. 9701; L E.O. 12356; 47 FR 14874, 15557; 3 CFR 1982 Comp., p. 166; 8 CFR part 2.

2. A new § 103.12 is added to read as follows:

§ 103.12 Definition of the term ''lawfully present'' aliens for purposes of applying for Title II social security benefits under Public Law 104–193.

(a) *Definition of the term an ''alien who is lawfully present in the United States.''* For the purposes of section 401(b)(2) of Pub. L. 104–193 only, an ''alien who is lawfully present in the United States'' means:

(1) A qualified alien as defined in section 431(b) of Pub. L. 104–193;

(2) An alien who has been inspected and admitted to the United States and who has not violated the terms of the status under which he or she was admitted or to which he or she has changed after admission;

(3) An alien who has been paroled into the United States pursuant to section 212(d)(5) of the Act for less than 1 year, except:

(i) Aliens paroled for deferred inspection or pending exclusion proceedings under 236(a) of the Act; and

(ii) Aliens paroled into the United States for prosecution pursuant to 8 CFR 212.5(a)(3);

(4) An alien who belongs to one of the following classes of aliens permitted to remain in the United States because the Attorney General has decided for humanitarian or other public policy reasons not to initiate deportation or exclusion proceedings or enforce departure:

(i) Aliens currently in temporary resident status pursuant to section 210 or 245A of the Act;

(ii) Aliens currently under Temporary Protected Status (TPS) pursuant to section 244A of the Act;

(iii) Cuban-Haitian entrants, as defined in section 202(b) Pub. L. 99–603, as amended;

(iv) Family Unity beneficiaries pursuant to section 301 of Pub. L. 101–649, as amended;

(v) Aliens currently under Deferred Enforced Departure (DED) pursuant to a decision made by the President;

(vi) Aliens currently in deferred action status pursuant to Service Operations Instructions at OI 242.1(a)(22);

(vii) Aliens who are the spouse or child of a United States citizen whose visa petition has been approved and who have a pending application for adjustment of status;

(5) Applicants for asylum under section 208(a) of the Act and applicants for withholding of deportation under section 243(h) of the Act who have been granted employment authorization, and such applicants under the age of 14 who have had an application pending for at least 180 days.

(b) *Non-issuance of an Order to Show Cause and non-enforcement of deportation and exclusion orders.* An alien may not be deemed to be lawfully present solely on the basis of the Service's decision not to, or failure to, issue an Order to Show Cause or solely on the basis of the Service's decision not to, or failure to, enforce an outstanding order of deportation or exclusion.

Dated: September 4, 1996.

Janet Reno,

Attorney General.

[FR Doc. 96–22963 Filed 9–4–96; 3:10 pm]

BILLING CODE 4410–10–M

DEPARTMENT OF TRANSPORTATION

Federal Aviation Administration

14 CFR Part 39

[Docket No. 96–SW–08–AD; Amendment 39–9740; AD 96–18–15]

RIN 2120–AA64

Airworthiness Directives; Bell Helicopter Textron, A Division of Textron Canada Ltd. Model 222, 222B, 222U, and 230 Helicopters

AGENCY: Federal Aviation Administration, DOT.

ACTION: Final rule; request for comments.

SUMMARY: This amendment supersedes an existing airworthiness directive (AD) 96–01–08, which superseded Priority Letter AD 95–23–02, both of which were applicable to certain serial-numbered Bell Helicopter Textron, A Division of Textron Canada Ltd. (BHT) Model 222, 222B, 222U, and 230 helicopters, that currently requires an initial check of both surfaces of each tail rotor blade (blade) for cracks; an inspection of the blade skin if a crack of a specified size or location is found in the paint; and replacement of the blade if a crack is found in the blade skin. This AD requires the same actions as required by the existing AD, but expands the applicability to include additional blade part numbers (P/N). This amendment is prompted by three incidents in which a crack developed in the stainless steel blade skins due to sanding marks on the blades that occurred during the manufacturing process on BHT Model 230 helicopters, which are similar in design to the Model 222, 222B and 222U helicopters. The actions specified by this AD are intended to prevent failure of a blade due to a fatigue crack, loss of the tail rotor and tail rotor gear box, and subsequent loss of control of the helicopter.

DATES: Effective September 23, 1996.

Comments for inclusion in the Rules Docket must be received on or before November 5, 1996.

ADDRESSES: Submit comments in triplicate to the Federal Aviation Administration (FAA), Office of the Assistant Chief Counsel, Attention: Rules Docket No. 96–SW–08–AD, 2601 Meacham Blvd., Room 663, Fort Worth, Texas 76137.

FOR FURTHER INFORMATION CONTACT: Mr. Charles Harrison, Aerospace Engineer, Rotorcraft Certification Office, Rotorcraft Directorate, FAA, Fort Worth, Texas 76193–0170, telephone (817) 222–5447, fax (817) 222–5960.

SUPPLEMENTARY INFORMATION: On November 3, 1995, the FAA issued priority letter AD 95–23–02, applicable to certain serial-numbered BHT Model 222, 222B, 222U, and 230 helicopters, to require an initial check of both surfaces of each blade for cracks; an inspection of the blade skin if a crack of a specified size or location was found in the paint; and replacement of the blade if a crack was found in the blade skin. That action was prompted by two incidents in which a crack developed in the stainless steel blade skins on BHT Model 230 helicopters. In one of these incidents, the blade failed during flight. Subsequent investigation revealed fatigue cracks originating from sanding marks on the blade skin. The cracks were located just outboard of the stainless steel blade doubler. That condition, if not corrected, could result in failure of a blade due to a fatigue crack, loss of the tail rotor and tail rotor gear box, and subsequent loss of control of the helicopter. Subsequent to the issuance of the priority letter AD, the FAA issued AD 96–01–08 to publish the

priority letter in the Federal Register and to correct an error in the applicability paragraph of the priority letter AD, which incorrectly stated the serial number (S/N) of one of the affected models. The Model 230 helicopters affected by the AD include S/N 23001 through 23038. The priority letter AD incorrectly stated S/N 23001 through 23034.

Since the issuance of AD 96–01–08, a crack has been discovered in the tail rotor blade of another serial-numbered Model 230 helicopter, that originated from a small indentation that occurred during the manufacturing process. As a result of this discovery, additional part-numbered blades have been determined to be affected.

Since the unsafe condition described is likely to exist or develop on other BHT Model 222, 222B, 222U, and 230 helicopters of the same type design, this AD supersedes AD 96–01–08 to require, before further flight, an initial visual check of both painted surfaces of each blade for cracks. If a crack of a specified size and location is found in the paint, removal of the paint and a visual inspection using a 10-power or higher magnifying glass is required before further flight. If this closer inspection reveals a crack in the blade skin, replacement of the blade with an airworthy blade is required. If no crack is found in the blade skin, the area from which the paint was removed is coated with a light-weight oil or an equivalent corrosion preventive compound, and then repetitive visual checks are required at intervals not to exceed 3 hours time-in-service (TIS). The initial visual check that is required before further flight and the repetitive checks may be performed by a pilot, but must be entered into the aircraft records showing compliance with paragraph (a) of this AD in accordance with sections 43.11 and 91.417 (a)(2)(v) of the Federal Aviation Regulations (14 CFR sections 43.11 and 91.417 (a)(2)(v)). This AD allows a pilot to perform this check because it involves only a visual check for cracking in the painted surface of the blade skin, and can be performed equally well by a pilot or a mechanic.

Since a situation exists that requires the immediate adoption of this regulation, it is found that notice and opportunity for public comment hereon are impracticable, and that good cause exists for making this amendment effective in less than 30 days.

Comments Invited

Although this action is in the form of a final rule that involves requirements affecting flight safety and, thus, was not preceded by notice and an opportunity for public comment, comments are invited on this rule. Interested persons are invited to comment on this rule by submitting such written data, views, or arguments as they may desire. Communications should identify the Rules Docket number and be submitted in triplicate to the address specified under the caption **ADDRESSES**. All communications received on or before the closing date for comments will be considered, and this rule may be amended in light of the comments received. Factual information that supports the commenter's ideas and suggestions is extremely helpful in evaluating the effectiveness of the AD action and determining whether additional rulemaking action would be needed.

Comments are specifically invited on the overall regulatory, economic, environmental, and energy aspects of the rule that might suggest a need to modify the rule. All comments submitted will be available, both before and after the closing date for comments, in the Rules Docket for examination by interested persons. A report that summarizes each FAA-public contact concerned with the substance of this AD will be filed in the Rules Docket.

Commenters wishing the FAA to acknowledge receipt of their comments submitted in response to this rule must submit a self-addressed, stamped postcard on which the following statement is made: ''Comments to Docket No. 96–SW08–AD.'' The postcard will be date stamped and returned to the commenter.

The regulations adopted herein will not have substantial direct effects on the States, on the relationship between the national government and the States, or on the distribution of power and responsibilities among the various levels of government. Therefore, in accordance with Executive Order 12612, it is determined that this final rule does not have sufficient federalism implications to warrant the preparation of a Federalism Assessment.

The FAA has determined that this regulation is an emergency regulation that must be issued immediately to correct an unsafe condition in aircraft, and that it is not a ''significant regulatory action'' under Executive Order 12866. It has been determined further that this action involves an emergency regulation under DOT Regulatory Policies and Procedures (44 FR 11034, February 26, 1979). If it is determined that this emergency regulation otherwise would be significant under DOT Regulatory Policies and Procedures, a final regulatory evaluation will be prepared and placed in the Rules Docket. A copy of it, if filed, may be obtained from the Rules Docket at the location provided under the caption **ADDRESSES.**

List of Subjects in 14 CFR Part 39

Air transportation, Aircraft, Aviation safety, Safety.

Adoption of the Amendment

Accordingly, pursuant to the authority delegated to me by the Administrator, the Federal Aviation Administration amends part 39 of the Federal Aviation Regulations (14 CFR part 39) as follows:

PART 39—AIRWORTHINESS DIRECTIVES

1. The authority citation for part 39 continues to read as follows:

Authority: 49 USC 106(g), 40113, 44701.

§ 39.13 [Amended]

2. Section 39.13 is amended by adding the following new airworthiness directive (AD), Amendment 39–9740, to read as follows:

AD 96–18–15 Bell Helicopter Textron, a Division of Textron Canada Ltd.: Amendment 39–9740. Docket No. 96–SW08–AD. Supersedes AD 96–01–08, issued December 21, 1995, Docket No. 95–SW–33–AD.

Applicability: Model 222 helicopters, serial numbers (S/N) 47006 through 47089, and Model 222B helicopters, S/N 47131 through 47156, with tail rotor blades, part numbers (P/N) 222–016–001–101, –107, –111, –113, –115, and –119; Model 222U helicopters, S/N 47501 through 47574, with tail rotor blades, P/N 222–016–001–107, –111, and –115; and Model 230 helicopters, S/N 23001 through 23038, with tail rotor blades, P/N 222–016–001–111 and –115, installed, certificated in any category.

Note 1: This AD applies to each helicopter identified in the preceding applicability provision, regardless of whether it has been modified, altered, or repaired in the area subject to the requirements of this AD. For helicopters that have been modified, altered, or repaired so that the performance of the requirements of this AD is affected, the owner/operator must use the authority provided in paragraph (g) to request approval from the FAA. This approval may address either no action, if the current configuration eliminates the unsafe condition, or different actions necessary to address the unsafe condition described in this AD. Such a request should include an assessment of the effect of the changed configuration on the unsafe condition addressed by this AD. In no case does the presence of any modification, alteration, or repair remove any helicopter from the applicability of this AD.

Compliance: Required before further flight, unless accomplished previously. To prevent failure of a tail rotor blade (blade) due to a fatigue crack (see Figure 1), loss of the tail rotor and tail rotor gear box, and subsequent

loss of control of the helicopter, accomplish the following:

(a) Clean the painted surfaces of the blades in an area approximately 6 inches spanwise on either side of the doubler tip. Visually check both surfaces of each blade for cracks by pushing the blade tip away from the surface being checked until it contacts the flapping stop and then holding the blade firmly against the stop. Pay particular attention to the area reaching from the doubler tip to 1 inch outboard, centering on an area 2 inches aft of the blade leading edge (see Figure 2).

(b) The visual check required by paragraph (a) may be performed by an owner/operator (pilot) holding at least a private pilot certificate, and must be entered into the aircraft records showing compliance with paragraph (a) of this AD in accordance with sections 43.11 and 91.417(a)(2)(v) of the Federal Aviation Regulations (14 CFR sections 43.11 and 91.417(a)(2)(v)).

(c) If the visual check described in paragraph (a) reveals any crack outboard of the doubler tip (Station 14.250), or any chordwise crack inboard of the doubler tip that is longer than 1 inch (see Figure 3), accomplish the following:

(1) Remove the paint from the skin in the cracked area using the following procedures (see Figure 4):

Note 2: Paint cracking that follows the contour of the doubler is common and requires no action.

(2) Using a 180 or 220 grit abrasion paper, sand by hand with spanwise strokes until greenish- or yellow-colored primer or bare metal begins to be exposed.

(3) Using spanwise or circular sanding motions, continue hand-sanding the remaining greenish- or yellow-colored primer in the cracked area using a 320 or 400 grit paper until sufficient metal has been exposed to allow inspection (see area indicated in Figure 4).

(d) Inspect the blade skin for cracks in the area that was exposed in accordance with paragraph (c) using a 10-power or higher magnifying glass.

(1) If no crack is found in the blade skin, coat the bare metal area with a light-weight oil or an equivalent corrosion preventive compound.

(2) If any crack is discovered, remove the blade and replace it with an airworthy blade.

(e) Perform the requirements of this AD upon installation of a replacement blade.

(f) Perform the visual checks of paragraph (a) of this AD and the subsequent inspections, if appropriate, at intervals not to exceed 3 hours TIS.

Note 3: A light-weight oil or equivalent corrosion preventive compound may be applied after accomplishing the repetitive requirements of paragraph (f) of this AD.

BILLING CODE 4910–13–U

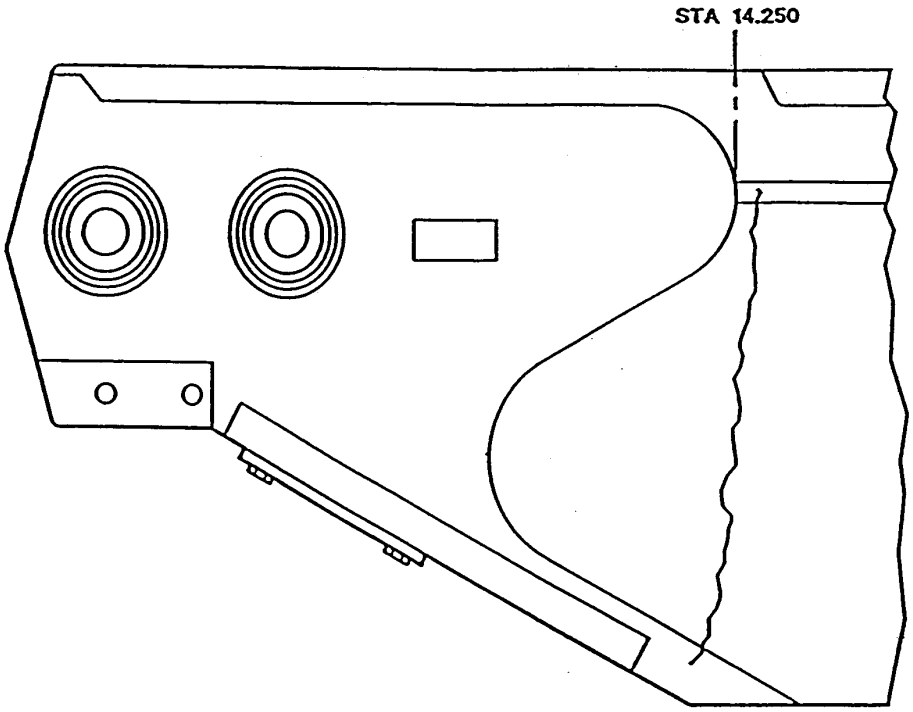

FIGURE 1. SKIN CRACK IN TAIL ROTOR BLADE

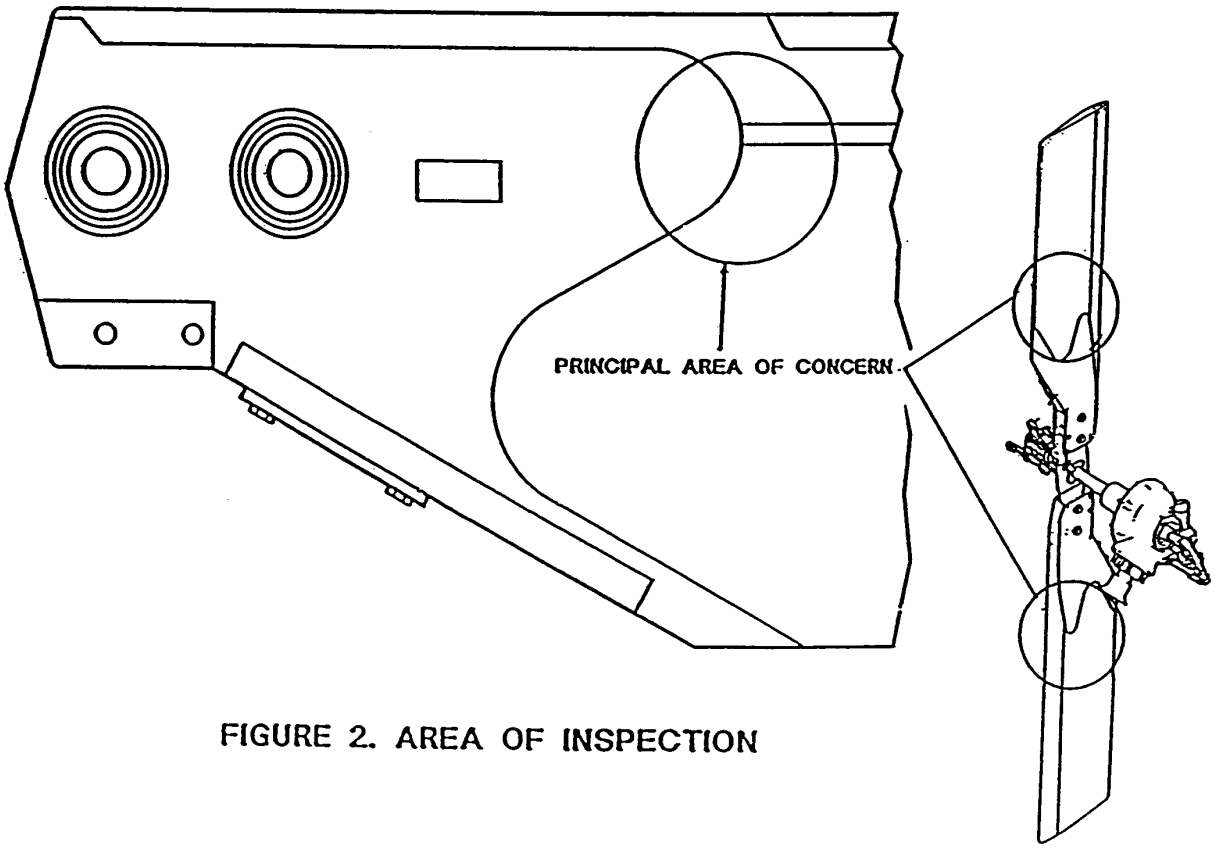

FIGURE 2. AREA OF INSPECTION

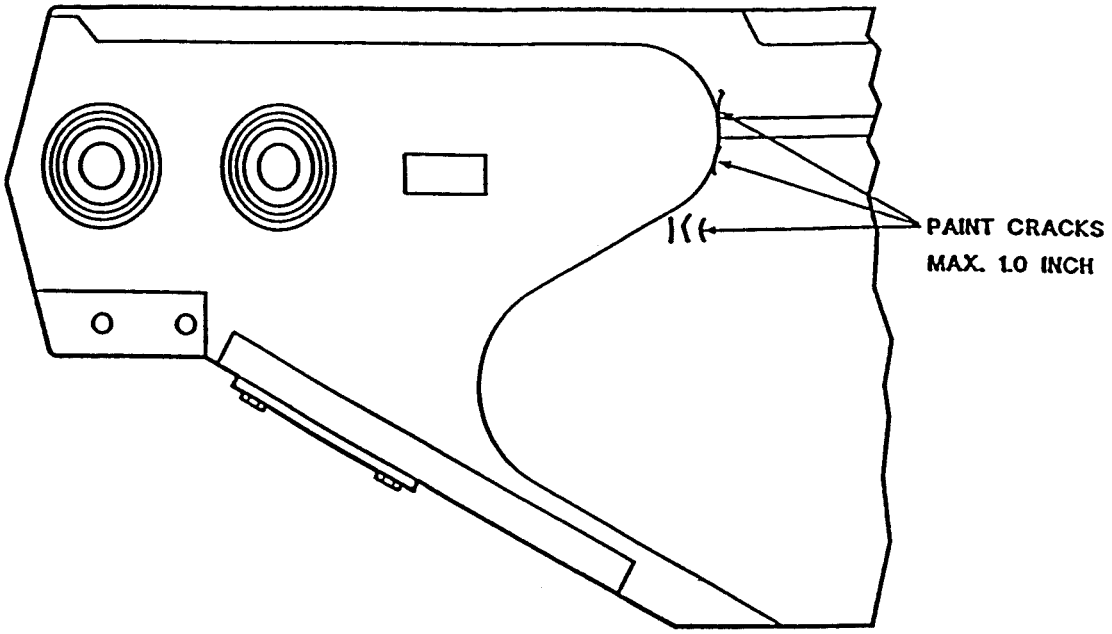

FIGURE 3.

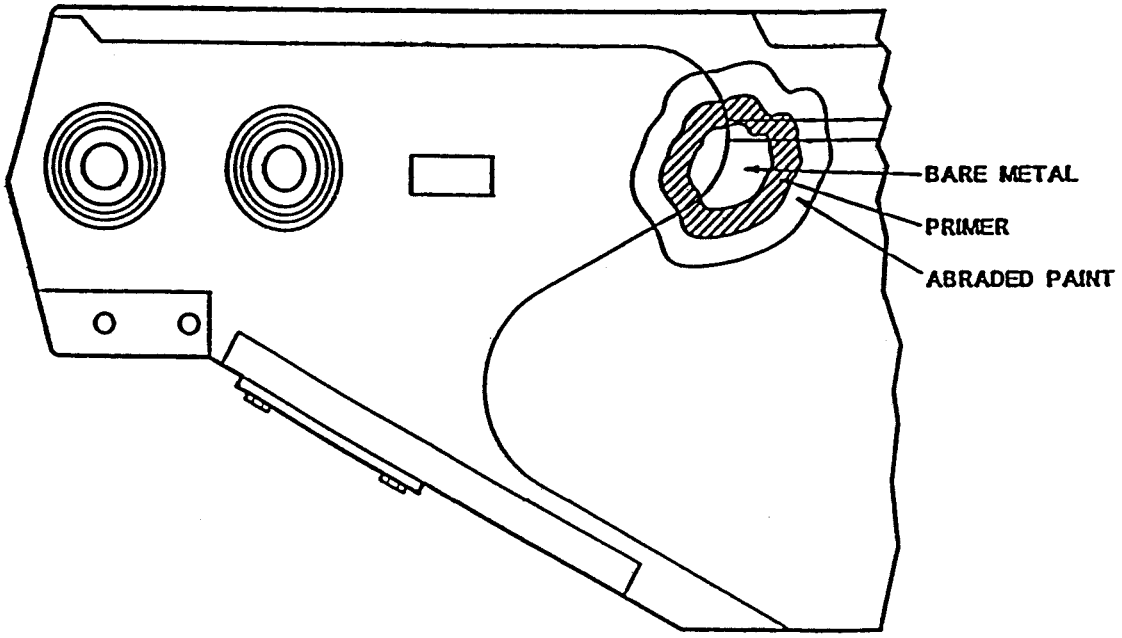

FIGURE 4.

BILLING CODE 4910–13–C

(g) An alternative method of compliance or adjustment of the compliance time that provides an acceptable level of safety may be used if approved by the Manager, Rotorcraft Certification Office, Rotorcraft Directorate, FAA. Operators shall submit their requests through an FAA Principal Maintenance Inspector, who may concur or comment and then send it to the Manager, Rotorcraft Certification Office.

Note 4: Information concerning the existence of approved alternative methods of compliance with this AD, if any, may be obtained from the Rotorcraft Certification Office.

(h) Special flight permits to accomplish the requirements of this AD will not be issued.

(i) This amendment becomes effective on September 23, 1996.

Issued in Fort Worth, Texas, on August 26, 1996.

Daniel P. Salvano,

Manager, Rotorcraft Directorate, Aircraft Certification Service.

[FR Doc. 96–22575 Filed 9–5–96; 8:45 am]

BILLING CODE 4910–13–U

---

14 CFR Part 39

[Docket No. 96–SW–07–AD; Amendment 39–9739; AD 96–12–25]

RIN 2120–AA64

Airworthiness Directives; Bell Helicopter Textron, Inc. Model 204B Helicopters

AGENCY: Federal Aviation Administration, DOT.

ACTION: Final rule; request for comments.

SUMMARY: This document publishes in the Federal Register an amendment adopting Airworthiness Directive (AD) AD 96–12–25 which was sent previously to all known U.S. owners and operators of Bell Helicopter Textron, Inc. (BHTI) Model 204B helicopters by individual letters. This AD requires a visual inspection of each tail rotor (T/R) blade (blade) for peeling, flaking, or bubbling paint that may indicate corrosion; an inspection for corrosion, if necessary; and replacement of the T/R blade with an airworthy blade if corrosion is discovered. This amendment is prompted by an FAA determination, based on the manufacturer's data, that certain serial-numbered T/R blades were manufactured with internal leading edge doublers fabricated from clad aluminum instead of bare aluminum material. The actions specified by this AD are intended to prevent debonding of the main spar internal leading edge doubler, which could lead to failure of a T/R blade and subsequent loss of control of the helicopter.

DATES: Effective September 23, 1996, to all persons except those persons to whom it was made immediately effective by priority letter AD 96–12–25 issued on June 5, 1996, which contained the requirements of this amendment.

Comments for inclusion in the Rules Docket must be received on or before November 5, 1996.

ADDRESSES: Submit comments in triplicate to the Federal Aviation Administration (FAA), Office of the Assistant Chief Counsel, Attention: Rules Docket No. 96–SW–07–AD, 2601 Meacham Blvd., Room 663, Fort Worth, Texas 76137.

The applicable service information may be obtained from Bell Helicopter Textron, Inc., P.O. Box 482, Fort Worth, Texas 76101.

FOR FURTHER INFORMATION CONTACT: Mr. Charles Harrison, Aerospace Engineer, Rotorcraft Certification Office, 2601 Meacham Blvd., Fort Worth, Texas 76137, telephone (817) 222–5447, fax (817) 222–5960.

SUPPLEMENTARY INFORMATION: On June 5, 1996, the FAA issued priority letter AD 96–12–25, applicable to BHTI Model 204B helicopters, serial numbers (S/N) 2001 through 2070 and S/N 2196 through 2199, which requires a visual inspection of each T/R blade for peeling, flaking, or bubbling paint that may indicate corrosion; an inspection for corrosion, if necessary; and, replacement of the T/R blade with an airworthy blade if corrosion is discovered. That action was prompted by an FAA determination, based on the manufacturer's data, that certain serial-numbered T/R blades were manufactured with internal leading edge doublers fabricated from clad aluminum instead of bare aluminum material. This condition, if not corrected, could result in debonding of the main spar internal leading edge doubler, which could lead to failure of a T/R blade and subsequent loss of control of the helicopter.

Since the unsafe condition described is likely to exist or develop on other BHTI Model 204B helicopters of the same type design, the FAA issued priority letter AD 96–12–25, to prevent debonding of the main spar internal leading edge doubler, which could lead to failure of a T/R blade and subsequent loss of control of the helicopter. The AD requires, within 10 hours time-in-service (TIS) after the effective date of this AD, and thereafter at intervals of not more than 7 calendar days, a visual inspection of each T/R blade for peeling, flaking, or bubbling paint, or corrosion along the bond lines viewed from the root and tip ends of the blade, and at the abrasion strip bond line on both sides of the blade from the root to the tip. If peeling, flaking, or bubbling paint is discovered, the paint in the affected area must be removed and the blade must be inspected for corrosion. If corrosion is discovered in the affected areas, the blade must be removed and replaced with an airworthy blade.

Since it was found that immediate corrective action was required, notice and opportunity for prior public comment thereon were impracticable and contrary to the public interest, and good cause existed to make the AD effective immediately by individual letters issued on June 5, 1996 to all known U.S. owners and operators of BHTI Model 204B helicopters. These conditions still exist, and the AD is hereby published in the Federal Register as an amendment to section 39.13 of the Federal Aviation Regulations (14 CFR 39.13) to make it effective to all persons.

Comments Invited

Although this action is in the form of a final rule that involves requirements affecting flight safety and, thus, was not preceded by notice and an opportunity for public comment, comments are invited on this rule. Interested persons are invited to comment on this rule by submitting such written data, views, or arguments as they may desire. Communications should identify the Rules Docket number and be submitted in triplicate to the address specified under the caption ''ADDRESSES.'' All communications received on or before the closing date for comments will be considered, and this rule may be amended in light of the comments received. Factual information that supports the commenter's ideas and suggestions is extremely helpful in evaluating the effectiveness of the AD action and determining whether additional rulemaking action would be needed.

Comments are specifically invited on the overall regulatory, economic, environmental, and energy aspects of the rule that might suggest a need to modify the rule. All comments submitted will be available, both before and after the closing date for comments, in the Rules Docket for examination by interested persons. A report that summarizes each FAA-public contact concerned with the substance of this AD will be filed in the Rules Docket.

Commenters wishing the FAA to acknowledge receipt of their comments submitted in response to this rule must submit a self-addressed, stamped postcard on which the following statement is made: ''Comments to

Docket No. 96SW–07–AD.'' The postcard will be date stamped and returned to the commenter.

The regulations adopted herein will not have substantial direct effects on the States, on the relationship between the national government and the States, or on the distribution of power and responsibilities among the various levels of government. Therefore, in accordance with Executive Order 12612, it is determined that this final rule does not have sufficient federalism implications to warrant the preparation of a Federalism Assessment.

The FAA has determined that this regulation is an emergency regulation that must be issued immediately to correct an unsafe condition in aircraft, and that it is not a ''significant regulatory action'' under Executive Order 12866. It has been determined further that this action involves an emergency regulation under DOT Regulatory Policies and Procedures (44 FR 11034, February 26, 1979). If it is determined that this emergency regulation otherwise would be significant under DOT Regulatory Policies and Procedures, a final regulatory evaluation will be prepared and placed in the Rules Docket. A copy of it, if filed, may be obtained from the Rules Docket at the location provided under the caption **ADDRESSES**.

List of Subjects in 14 CFR Part 39

Air transportation, Aircraft, Aviation safety, Safety.

Adoption of the Amendment

Accordingly, pursuant to the authority delegated to me by the Administrator, the Federal Aviation Administration amends part 39 of the Federal Aviation Regulations (14 CFR part 39) as follows:

PART 39—AIRWORTHINESS DIRECTIVES

1. The authority citation for part 39 continues to read as follows:

Authority: 49 USC 106(g), 40113, 44701.

§ 39.13 [Amended]

2. Section 39.13 is amended by adding a new airworthiness directive to read as follows:

AD 96–12–25 Bell Helicopter Textron, Inc.: Amendment 39–9739. Docket No. 96–SW–07–AD.

Applicability: Model 204B helicopters, serial numbers (S/N) 2001 through 2070 and S/N 2196 through 2199, with tail rotor (T/R) blade (blade), part number (P/N) 204–011–702–015 or –121, S/N A–20262 through A–20268, A–20270 through A20282, A–20284 through A–20287, A–20289 through A–20422, A20424 through A–20428, A–20430 through A–20433, A–20435 through A–20464, A–20466 through A–20497, A–20499 through A21019, A–21027 through A–21031, A–21041, A–21047, A–21049 and A–21059, installed, certificated in any category.

Note 1: This AD applies to each helicopter identified in the preceding applicability provision, regardless of whether it has been modified, altered, or repaired in the area subject to the requirements of this AD. For helicopters that have been modified, altered, or repaired so that the performance of the requirements of this AD is affected, the owner/operator must use the authority provided in paragraph (d) to request approval from the FAA. This approval may address either no action, if the current configuration eliminates the unsafe condition, or different actions necessary to address the unsafe condition described in this AD. Such a request should include an assessment of the effect of the changed configuration on the unsafe condition addressed by this AD. In no case does the presence of any modification, alteration, or repair remove any helicopter from the applicability of this AD.

Compliance: Required as indicated, unless accomplished previously.

To prevent debonding of the main spar internal leading edge doubler, which could lead to failure of a T/R blade and subsequent loss of control of the helicopter, accomplish the following:

(a) Within 10 hours time-in-service (TIS) after the effective date of this AD, and thereafter at intervals of not more than 7 calendar days, clean each T/R blade using a mild detergent and water to remove soot and grime.

(b) Visually inspect each T/R blade for peeling, flaking, or bubbling paint, or corrosion along the bond lines viewed from the root and tip ends of the blade, and at the abrasion strip bond line on both sides of the blade from the root to the tip.

(c) If the visual inspection indicates peeling, flaking, or bubbling paint, remove the paint from the affected area and perform a visual inspection for corrosion.

(1) If no corrosion is noted, refinish the blade.

(2) If corrosion is noted in the bond lines of the affected areas, remove the blade and replace it with an airworthy blade. Replacement with an airworthy blade that has a serial number not listed in the Applicability section of this AD constitutes a terminating action for this AD.

Note 2: Bell Helicopter Textron, Inc. ASB No. 204–96–48, Revision A, dated February 12, 1996, pertains to this AD.

(d) An alternative method of compliance or adjustment of the compliance time that provides an acceptable level of safety may be used if approved by the Manager, Rotorcraft Certification Office, Rotorcraft Directorate, FAA. Operators shall submit their requests through an FAA Principal Maintenance Inspector, who may concur or comment and then send it to the Manager, Rotorcraft Certification Office.

Note 3: Information concerning the existence of approved alternative methods of compliance with this AD, if any, may be obtained from the Rotorcraft Certification Office.

(e) Special flight permits may be issued in accordance with sections 21.197 and 21.199 of the Federal Aviation Regulations (14 CFR 21.197 and 21.199) to operate the helicopter to a location where the requirements of this AD can be accomplished.

(f) This amendment becomes effective on September 23, 1996, to all persons except those persons to whom it was made immediately effective by priority letter AD 96–12–25, issued June 5, 1996, which contained the requirements of this amendment.

Issued in Fort Worth, Texas, on August 26, 1996.

Daniel P. Salvano,

Manager, Rotorcraft Directorate, Aircraft Certification Service.

[FR Doc. 96–22574 Filed 9–5–96; 8:45 am]

BILLING CODE 4910–13–U

---

14 CFR Part 39

[Docket No. 96–SW–11–AD; Amendment 39–9741; AD 96–12–26]

RIN 2120–AA64

Airworthiness Directives; Bell Helicopter Textron, Inc. Manufactured Model AH–1, HH–1K, TH–1F, TH–1L, UH–1A, UH–1B, UH–1E, UH–1F, UH–1H, UH–1L, and UH–1P Helicopters

AGENCY: Federal Aviation Administration, DOT.

ACTION: Final rule; request for comments.

SUMMARY: This document publishes in the Federal Register an amendment adopting Airworthiness Directive (AD) AD 96–12–26 which was sent previously to all known U.S. owners and operators of Bell Helicopter Textron, Inc. (BHTI) manufactured Model AH–1, HH–1K, TH–1F, TH–1L, UH–1A, UH–1B, UH–1E, UH–1F, UH–1H, UH–1L, and UH–1P helicopters by individual letters. This AD requires a visual inspection of each tail rotor (T/R) blade (blade) for peeling, flaking, or bubbling paint that may indicate corrosion; an inspection for corrosion, if necessary; and replacement of the T/R blade with an airworthy blade if corrosion is discovered. This amendment is prompted by an FAA determination, based on the manufacturer's data, that certain serial-numbered T/R blades were manufactured with internal leading edge doublers fabricated from clad aluminum instead of bare aluminum material. The actions specified by this AD are intended to prevent debonding of the main spar internal leading edge doubler, which could lead to failure of a T/R blade and subsequent loss of control of the helicopter.

DATES: Effective September 23, 1996, to all persons except those persons to whom it was made immediately effective by priority letter AD 96–12–26 issued on June 5, 1996, which contained the requirements of this amendment.

Comments for inclusion in the Rules Docket must be received on or before November 5, 1996.

ADDRESSES: Submit comments in triplicate to the Federal Aviation Administration (FAA), Office of the Assistant Chief Counsel, Attention: Rules Docket No. 96–SW–11–AD, 2601 Meacham Blvd., Room 663, Fort Worth, Texas 76137.

The applicable service information may be obtained from Bell Helicopter Textron, Inc., P.O. Box 482, Fort Worth, Texas 76101.

FOR FURTHER INFORMATION CONTACT: Mr. Charles Harrison, Aerospace Engineer, Rotorcraft Certification Office, 2601 Meacham Blvd., Fort Worth, Texas 76137, telephone (817) 222–5447, fax (817) 222–5960.

SUPPLEMENTARY INFORMATION: On June 5, 1996, the FAA issued priority letter AD 96–12–26, applicable to BHTI-manufactured Model AH–1, HH–1K, TH–1F, TH–1L, UH–1A, UH–1B, UH–1E, UH–1F, UH–1H, UH–1L, and UH–1P helicopters, which requires a visual inspection of each T/R blade for peeling, flaking, or bubbling paint that may indicate corrosion; an inspection for corrosion, if necessary; and, replacement of the T/R blade with an airworthy blade if corrosion is discovered. That action was prompted by an FAA determination, based on the manufacturer's data, that certain serial-numbered T/R blades were manufactured with internal leading edge doublers fabricated from clad aluminum instead of bare aluminum material. This condition, if not corrected, could result in debonding of the main spar leading edge doubler, which could lead to failure of a T/R blade and subsequent loss of control of the helicopter.

Since the unsafe condition described is likely to exist or develop on other BHTI-manufactured Model AH–1, HH–1K, TH–1F, TH–1L, UH–1A, UH–1B, UH–1E, UH–1F, UH–1H, UH–1L, and UH–1P helicopters of the same type design, the FAA issued priority letter AD 96–12–26, to inspect for debonding of the main spar internal leading edge doubler, which could lead to failure of a T/R blade and subsequent loss of control of the helicopter. The AD requires, within 10 hours time-in-service (TIS) after the effective date of this AD, and thereafter at intervals of not more than 7 calendar days, a visual inspection of the each T/R blade for peeling, flaking, or bubbling paint that may indicate corrosion, or corrosion along the bond lines viewed from the root and tip ends of the blade, and at the abrasion strip bond line on both sides of the blade from the root to the tip. If peeling, flaking, or bubbling paint is discovered, the paint in the affected area must be removed and the blade must be inspected for corrosion. If corrosion is discovered in the affected areas, the blade must be removed and replaced with an airworthy blade.

Since it was found that immediate corrective action was required, notice and opportunity for prior public comment thereon were impracticable and contrary to the public interest, and good cause existed to make the AD effective immediately by individual letters issued on June 5, 1996 to all known U.S. owners and operators of BHTI-manufactured Model AH–1, HH–1K, TH–1F, TH–1L, UH–1A, UH–1B, UH–1E, UH–1F, UH–1H, UH–1L, and UH–1P helicopters. These conditions still exist, and the AD is hereby published in the Federal Register as an amendment to section 39.13 of the Federal Aviation Regulations (14 CFR 39.13) to make it effective to all persons.

Comments Invited

Although this action is in the form of a final rule that involves requirements affecting flight safety and, thus, was not preceded by notice and an opportunity for public comment, comments are invited on this rule. Interested persons are invited to comment on this rule by submitting such written data, views, or arguments as they may desire. Communications should identify the Rules Docket number and be submitted in triplicate to the address specified under the caption **ADDRESSES**. All communications received on or before the closing date for comments will be considered, and this rule may be amended in light of the comments received. Factual information that supports the commenter's ideas and suggestions is extremely helpful in evaluating the effectiveness of the AD action and determining whether additional rulemaking action would be needed.

Comments are specifically invited on the overall regulatory, economic, environmental, and energy aspects of the rule that might suggest a need to modify the rule. All comments submitted will be available, both before and after the closing date for comments, in the Rules Docket for examination by interested persons. A report that summarizes each FAA-public contact concerned with the substance of this AD will be filed in the Rules Docket.

Commenters wishing the FAA to acknowledge receipt of their comments submitted in response to this rule must submit a self-addressed, stamped postcard on which the following statement is made: ''Comments to Docket No. 96SW–11–AD.'' The postcard will be date stamped and returned to the commenter.

The regulations adopted herein will not have substantial direct effects on the States, on the relationship between the national government and the States, or on the distribution of power and responsibilities among the various levels of government. Therefore, in accordance with Executive Order 12612, it is determined that this final rule does not have sufficient federalism implications to warrant the preparation of a Federalism Assessment.

The FAA has determined that this regulation is an emergency regulation that must be issued immediately to correct an unsafe condition in aircraft, and that it is not a ''significant regulatory action'' under Executive Order 12866. It has been determined further that this action involves an emergency regulation under DOT Regulatory Policies and Procedures (44 FR 11034, February 26, 1979). If it is determined that this emergency regulation otherwise would be significant under DOT Regulatory Policies and Procedures, a final regulatory evaluation will be prepared and placed in the Rules Docket. A copy of it, if filed, may be obtained from the Rules Docket at the location provided under the caption **ADDRESSES**.

List of Subjects in 14 CFR Part 39

Air transportation, Aircraft, Aviation safety, Safety.

Adoption of the Amendment

Accordingly, pursuant to the authority delegated to me by the Administrator, the Federal Aviation Administration amends part 39 of the Federal Aviation Regulations (14 CFR part 39) as follows:

PART 39—AIRWORTHINESS DIRECTIVES

1. The authority citation for part 39 continues to read as follows:

Authority: 49 USC 106(g), 40113, 44701.

§ 39.13 [Amended]

2. Section 39.13 is amended by adding a new airworthiness directive to read as follows:

AD 96–12–26 California Department of Forestry; Erickson Air Crane Co.; Garlick Helicopters; Hawkins and Powers Aviation, Inc.; International Helicopters, inc.; Smith Helicopters; Southwest Florida Aviation; West Coast Fabrications; Western International Aviation, Inc.; Williams Helicopter Technology, Inc.; and UNC Helicopters: Amendment 39–9741. Docket No. 96–SW–11–AD.

Applicability: Bell Helicopter Textron, Inc.manufactured Model AH–1, HH–1K, TH–1F, TH–1L, UH–1A, UH–1B, UH–1E, UH–1F, UH–1H, UH–1L, and UH–1P helicopters, with tail rotor (T/R) blade (blade), part number (P/N) 204–011–702–015 or –121, serial numbers (S/N) A–20262 through A–20268, A–20270 through A–20282, A–20284 through A–20287, A–20289 through A–20422, A–20424 through A–20428, A–20430 through A–20433, A–20435 through A–20464, A–20466 through A–20497, A–20499 through A–21019, A–21027 through A–21031, A–21041, A–21047, A–21049 and A–21059, installed, certificated in any category.

Note 1: This AD applies to each helicopter identified in the preceding applicability provision, regardless of whether it has been modified, altered, or repaired in the area subject to the requirements of this AD. For helicopters that have been modified, altered, or repaired so that the performance of the requirements of this AD is affected, the owner/operator must use the authority provided in paragraph (d) to request approval from the FAA. This approval may address either no action, if the current configuration eliminates the unsafe condition, or different actions necessary to address the unsafe condition described in this AD. Such a request should include an assessment of the effect of the changed configuration on the unsafe condition addressed by this AD. In no case does the presence of any modification, alteration, or repair remove any helicopter from the applicability of this AD.

Compliance: Required as indicated, unless accomplished previously.

To prevent debonding of the main spar internal leading edge doubler, which could lead to failure of a T/R blade and subsequent loss of control of the helicopter, accomplish the following:

(a) Within 10 hours time-in-service (TIS) after the effective date of this AD, and thereafter at intervals of not more than 7 calendar days, clean each T/R blade using a mild detergent and water to remove soot and grime.

(b) Visually inspect each T/R blade for peeling, flaking, or bubbling paint, or corrosion along the bond lines viewed from the root and tip ends of the blade, and at the abrasion strip bond line on both sides of the blade from the root to the tip.

(c) If the visual inspection indicates peeling, flaking, or bubbling paint, remove the paint from the affected area and perform a visual inspection for corrosion.

(1) If no corrosion is noted, refinish the blade.

(2) If corrosion is noted in the bond lines of the affected areas, remove the blade and replace it with an airworthy blade. Replacement with an airworthy blade that has a serial number not listed in the Applicability section of this AD constitutes a terminating action for this AD.

Note 2: Bell Helicopter Textron, Inc. ASB No. 204–9648, Revision A, dated February 12, 1996, which pertains to Model 204B helicopters, also pertains to this AD.

(d) An alternative method of compliance or adjustment of the compliance time that provides an acceptable level of safety may be used if approved by the Manager, Rotorcraft Certification Office, Rotorcraft Directorate, FAA. Operators shall submit their requests through an FAA Principal Maintenance Inspector, who may concur or comment and then send it to the Manager, Rotorcraft Certification Office.

Note 3: Information concerning the existence of approved alternative methods of compliance with this AD, if any, may be obtained from the Rotorcraft Certification Office.

(e) Special flight permits may be issued in accordance with sections 21.197 and 21.199 of the Federal Aviation Regulations (14 CFR 21.197 and 21.199) to operate the helicopter to a location where the requirements of this AD can be accomplished.

(f) This amendment becomes effective on September 23, 1996, to all persons except those persons to whom it was made immediately effective by priority letter AD 96–12–26, issued June 5, 1996, which contained the requirements of this amendment.

Issued in Fort Worth, Texas, on August 26, 1996.

Daniel P. Salvano,

Manager, Rotorcraft Directorate, Aircraft Certification Service.

[FR Doc. 96–22573 Filed 9–5–96; 8:45 am]

BILLING CODE 4910–13–U

---

14 CFR Part 39

[Docket No. 96–CE–16–AD; Amendment 39–9748; AD 96–18-21]

RIN 2120–AA64

Airworthiness Directives; Pilatus Britten-Norman Ltd. (formerly Britten-Norman) BN–2A and BN2A MK. 111 Series Airplanes

AGENCY: Federal Aviation Administration, DOT.

ACTION: Final rule.

SUMMARY: This amendment supersedes Airworthiness Directive (AD) 75–26–15, which currently requires repetitively inspecting the aileron mass balance clamp unit attachment for looseness on Pilatus Britten-Norman Ltd. (Pilatus Britten-Norman) BN–2A and BN2A MK. 111 series airplanes, and modifying the aileron and mass balance clamp unit if any looseness is found. The Federal Aviation Administration's policy on aging commuter-class aircraft is to eliminate or, in certain instances, reduce the number of certain repetitive short-interval inspections when improved parts or modifications are available. This action retains the repetitive inspections required by AD 75–26–15, and requires modifying the aileron and mass balance unit (at a certain time) as terminating action for the repetitive inspection requirement. The actions specified in this AD are intended to prevent failure of the aileron mass balance attachment, which could result in loss of control of the airplane.

DATES: Effective October 25, 1996.

The incorporation by reference of certain publications listed in the regulations is approved by the Director of the Federal Register as of October 25, 1996.

ADDRESSES: Service information that applies to this AD may be obtained from Pilatus Britten-Norman Limited, Bembridge, Isle of Wight, United Kingdom PO35 5PR; telephone 44–1983 872511; facsimile 44–1983 873246. This information may also be examined at the Federal Aviation Administration (FAA), Central Region, Office of the Assistant Chief Counsel, Attention: Rules Docket 96–CE–16–AD, Room 1558, 601 E. 12th Street, Kansas City, Missouri 64106; or at the Office of the Federal Register, 800 North Capitol Street, NW., suite 700, Washington, DC.

FOR FURTHER INFORMATION CONTACT: Mr. Tom Rodriguez, Program Officer, Brussels Aircraft Certification Division, FAA, Europe, Africa, and Middle East Office, c/o American Embassy, B–1000 Brussels, Belgium; telephone (32 2) 508.2717; facsimile (32 2) 230.6899; or Mr. Jeffrey Morfitt, Project Officer, Small Airplane Directorate, Airplane Certification Service, FAA, 1201 Walnut, suite 900, Kansas City, Missouri 64106; telephone (816) 426–6932; facsimile (816) 426–2169.

SUPPLEMENTARY INFORMATION:

Events Leading to This Action

A proposal to amend part 39 of the Federal Aviation Regulations (14 CFR part 39) to include an AD that would apply to Pilatus Britten-Norman BN–2A and BN2A MK. 111 series airplanes was published in the Federal Register on May 9, 1996 (61 FR 21146). The action proposed to supersede AD 75–26–15 with a new AD that would (1) retain the requirements of repetitively inspecting the aileron mass balance clamp unit

attachment for looseness and modifying any aileron and mass balance unit immediately where looseness is found; and (2) require modifying the aileron and mass balance unit (at a certain time) if not previously required. The modification would terminate the need for the repetitive inspections of the aileron and mass balance unit attachment. Accomplishment of the proposed actions would continue to be in accordance with Britten-Norman Service Bulletin No. BN–2/SB.67, Issue 1, dated October 24, 1973.

Interested persons have been afforded an opportunity to participate in the making of this amendment. No comments were received on the proposed rule or the FAA's determination of the cost to the public.

The FAA's Determination

After careful review of all available information related to the subject presented above, the FAA has determined that air safety and the public interest require the adoption of the rule as proposed except for minor editorial corrections. The FAA has determined that these minor corrections will not change the meaning of the AD and will not add any additional burden upon the public than was already proposed.

Cost Impact

The FAA estimates that 109 airplanes in the U.S. registry will be affected by this AD, that it will take approximately 10 workhours (inspection: 1 workhour; modification: 9 workhours) per airplane to accomplish the action, and that the average labor rate is approximately $60 an hour. Parts cost approximately $160 per airplane. Based on these figures, the total cost impact of this AD on U.S. operators is estimated to be $82,840. This figure only takes into account the cost of the initial inspection and inspection-terminating modification and does not take into account the cost of repetitive inspections. The FAA has no way of determining the number of repetitive inspections each of the owners/operators will incur over the life of the affected airplanes.

This figure is also based on the assumption that no affected airplane owner/operator has accomplished the required modification. This action eliminates the repetitive inspections required by AD 75–26–15. The FAA has no way of determining the operational levels of each individual operator of the affected airplanes, and subsequently cannot determine the repetitive inspection costs that would be eliminated by this action. The FAA estimates these costs to be substantial over the long term.

Pilatus Britten-Norman does not know the number of parts distributed to the affected airplane owners/operators. Numerous sets of parts were sent out to the owners/operators of the affected airplanes, but over the years Pilatus Britten-Norman has not retained these records. The company believes that most of the affected airplanes already have the required inspection-terminating modification incorporated.

The FAA's Aging Commuter Class Aircraft Policy

This AD is part of the FAA's aging commuter airplane policy, which briefly states that, when a modification exists that could eliminate or reduce the number of required critical inspections, the modification should be incorporated.

The intent of the FAA's aging commuter airplane program is to ensure safe operation of airplanes that are in commercial service without adversely impacting private operators. Of the approximately 109 airplanes in the U.S. registry that would be affected by this AD, the FAA has determined that approximately 25 percent are operated in scheduled passenger service by 11 different operators. A significant number of the remaining 75 percent are operated in other forms of air transportation such as air cargo and air taxi.

This action allows 1,000 hours time-in-service (TIS) after the effective date of the AD before mandatory accomplishment of the design modification. The average utilization of the fleet for those airplanes in commercial commuter service is approximately 25 to 50 hours TIS per week. Based on these figures, operators of airplanes involved in commercial operation will have to accomplish the modification within 5 to 10 months after this AD becomes effective. For private owners, who typically operate between 100 to 200 hours TIS per year, this allows 5 to 10 years before the required modification becomes mandatory. The time it would take those in air cargo/air taxi operations before this action becomes mandatory is unknown because of the wide variation between each airplane used in this service. The exact numbers would fall somewhere between the average for commuter operators and private operators.

Regulatory Impact

The regulations adopted herein will not have substantial direct effects on the States, on the relationship between the national government and the States, or on the distribution of power and responsibilities among the various levels of government. Therefore, in accordance with Executive Order 12612, it is determined that this final rule does not have sufficient federalism implications to warrant the preparation of a Federalism Assessment.

For the reasons discussed above, I certify that this action (1) is not a ''significant regulatory action'' under Executive Order 12866; (2) is not a ''significant rule'' under DOT Regulatory Policies and Procedures (44 FR 11034, February 26, 1979); and (3) will not have a significant economic impact, positive or negative, on a substantial number of small entities under the criteria of the Regulatory Flexibility Act. A copy of the final evaluation prepared for this action is contained in the Rules Docket. A copy of it may be obtained by contacting the Rules Docket at the location provided under the caption **ADDRESSES**.

List of Subjects in 14 CFR Part 39

Air transportation, Aircraft, Aviation safety, Incorporation by reference, Safety.

Adoption of the Amendment

Accordingly, pursuant to the authority delegated to me by the Administrator, the Federal Aviation Administration amends part 39 of the Federal Aviation Regulations (14 CFR part 39) as follows:

PART 39—AIRWORTHINESS DIRECTIVES

1. The authority citation for part 39 continues to read as follows:

Authority: 49 USC 106(g), 40113, 44701.

§ 39.13 [Amended]

2. Section 39.13 is amended by removing Airworthiness Directive (AD) 75–26–15, Amendment 39–2464, and by adding a new AD to read as follows:

96–18–21 Pilatus Britten-Norman: Amendment 39–9748; Docket No. 96–CE–16–AD. Supersedes AD 75–26–15, Amendment 39- 2464. Applicability: Models BN–2, BN–2A, BN–2A–6, BN–2A–8, BN–2A–2, BN–2A–9, BN–2A–3, BN–2A–20, BN–2A–21, BN–2A–26, BN–2A–27, BN2A MK. 111, BN2A MK. 111–2, and BN2A MK. 111–3 airplanes (all serial numbers), certificated in any category.

Note 1: This AD applies to each airplane identified in the preceding applicability provision, regardless of whether it has been modified, altered, or repaired in the area subject to the requirements of this AD. For airplanes that have been modified, altered, or repaired so that the performance of the requirements of this AD is affected, the owner/operator must request approval for an

alternative method of compliance in accordance with paragraph (f) of this AD. The request should include an assessment of the effect of the modification, alteration, or repair on the unsafe condition addressed by this AD; and, if the unsafe condition has not been eliminated, the request should include specific proposed actions to address it.

Compliance: Required as indicated in the body of this AD, unless already accomplished.

To prevent failure of the aileron mass balance attachment, which could result in loss of control of the airplane, accomplish the following:

(a) Prior to the first flight of each day after the effective date of this AD (see NOTE 2 of this AD), inspect the attachment of the aileron mass balance clamp unit for looseness in accordance with the *''Inspection''* section of Britten-Norman Service Bulletin (SB) No. BN–2/SB.67, Issue 1, dated October 24, 1973.

Note 2: The ''prior to first flight of each day after the effective date of this AD'' compliance time required by paragraph (a) of this AD is exactly the same as required by AD 75–26–15 (superseded by this AD).

(b) If a loose attachment of the aileron mass balance clamp unit is found during any of the inspections required by this AD, prior to further flight, modify the aileron and mass balance clamp unit in accordance with the ''b. Sequence of Operations'' section of Britten-Norman SB No. BN–2/SB.67, Issue 1, dated October 24, 1973.

(c) Within the next 1,000 hours time-in-service after the effective date of this AD, unless already accomplished as specified and required by paragraph (b) of this AD, modify the aileron and mass balance clamp unit in accordance with the ''b. Sequence of Operations'' section of Britten-Norman SB No. BN–2/SB.67, Issue 1, dated October 24, 1973.

(d) Accomplishing the modification required by paragraph (b) or (c) of this AD is considered terminating action for the repetitive inspection requirement of this AD.

(e) Special flight permits may be issued in accordance with sections 21.197 and 21.199 of the Federal Aviation Regulations (14 CFR 21.197 and 21.199) to operate the airplane to a location where the requirements of this AD can be accomplished.

(f) An alternative method of compliance or adjustment of the initial or repetitive compliance times that provides an equivalent level of safety may be approved by the Manager, Brussels Aircraft Certification Division, Europe, Africa, Middle East office, FAA, c/o American Embassy, 1000 Brussels, Belgium. The request should be forwarded through an appropriate FAA Maintenance Inspector, who may add comments and then send it to the Manager, Brussels Aircraft Certification Division. Alternative methods of compliance approved in accordance with AD 75–26–15 (superseded by this action) are not considered approved as alternative methods of compliance with this AD.

Note 3: Information concerning the existence of approved alternative methods of compliance with this AD, if any, may be obtained from the Brussels Aircraft Certification Division.

(g) The inspections and modification required by this AD shall be done in accordance with Britten-Norman Service Bulletin No. BN–2/SB.67, Issue 1, dated October 24, 1973. This incorporation by reference was approved by the Director of the Federal Register in accordance with 5 U.S.C. 552(a) and 1 CFR part 51. Copies may be obtained from Pilatus Britten-Norman Limited, Bembridge, Isle of Wight, United Kingdom PO35 5PR. Copies may be inspected at the FAA, Central Region, Office of the Assistant Chief Counsel, Room 1558, 601 E. 12th Street, Kansas City, Missouri, or at the Office of the Federal Register, 800 North Capitol Street, NW., suite 700, Washington, DC.

(h) This amendment (39–9748) supersedes AD 75–26–15, Amendment 39–2464.

(i) This amendment (39–9748) becomes effective on October 25, 1996.

Issued in Kansas City, Missouri, on August 29,1996.

Henry A. Armstrong,

Acting Manager, Small Airplane Directorate, Aircraft Certification Service.

[FR Doc. 96–22687 Filed 9–5–96; 8:45 am]

BILLING CODE 4910–13–P

---

14 CFR Part 39

[Docket No. 91–ANE–29; Amendment 39–9470; AD 91–21–01 R1]

RIN 2120–AA64

Airworthiness Directives; Textron Lycoming Model TIO–540–S1AD Reciprocating Engines

AGENCY: Federal Aviation Administration, DOT.

ACTION: Final rule; correction.

SUMMARY: This document makes a correction to Airworthiness Directive (AD) 91–21–01 R1 applicable to Textron Lycoming Model TIO–540–S1AD reciprocating engines that was published in the Federal Register on June 7, 1996 (61 FR 29003). The reference to the New York Aircraft Certification Office in Note 3 following the paragraph describing the procedure for obtaining an alternative method of compliance was omitted. This document corrects that omission. In all other respects, the original document remains the same.

EFFECTIVE DATE: September 6, 1996.

FOR FURTHER INFORMATION CONTACT: Richard Fiesel, Aerospace Engineer, New York Aircraft Certification Office, FAA, Engine and Propeller Directorate, 10 Fifth St., 3rd Floor, Valley Stream, NY 11581–1200; telephone (516) 256–7504, fax (516) 568–2716.

SUPPLEMENTARY INFORMATION: A final rule airworthiness directive applicable to Textron Lycoming Model TIO–540–S1AD reciprocating engines, was published in the Federal Register on June 7, 1996 (61 FR 29003). The following correction is needed:

§ 39.13 [Corrected]

On page 29005, in the first column, in the Compliance Section, in Note 3 of paragraph (c), in the fourth line, ''obtained from.'' is corrected to read ''obtained from the New York Aircraft Certification Office''.

Issued in Burlington, MA, on August 28, 1996.

Jay J. Pardee,

Manager, Engine and Propeller Directorate, Aircraft Certification Service.

[FR Doc. 96–22773 Filed 9–5–96; 8:45 am]

BILLING CODE 4910–13–P

---

14 CFR Part 71

[Airspace Docket No. 96–ASO–12]

Amendment to Class E Airspace; Tampa, FL

AGENCY: Federal Aviation Administration (FAA), DOT.

ACTION: Final rule.

SUMMARY: This amendment modifies the Class E airspace area at Tampa, FL, to accommodate a GPS RWY 18 Standard Instrument Approach Procedure (SIAP) for the Vandenberg Airport. Additional controlled airspace extending upward from 700 feet above the surface (AGL) is needed to accommodate this SIAP and for instrument flight rules (IFR) operations at the airport. The operating status of the airport will change from VFR to include IFR operations concurrent with publication of this SIAP.

EFFECTIVE DATE: 0901 UTC, December 5, 1996.

FOR FURTHER INFORMATION CONTACT: Benny L. McGlamery, System Management Branch, Air Traffic Division, Federal Aviation Administration, P.O. Box 20636, Atlanta, Georgia 30320; telephone (404) 305–5570.

SUPPLEMENTARY INFORMATION:

History

On June 24, 1996, the FAA proposed to amend Part 71 of the Federal Aviation Regulations (14 CFR Part 71) by modifying Class E airspace at Tampa, FL (61 FR 32374). This action would provide adequate Class E airspace for IFR operations at the Vandenberg Airport.

Interested parties were invited to participate in this rulemaking proceeding by submitting written comments on the proposal to the FAA.

No comments objecting to the proposal were received. Designations for Class E airspace extending upward from 700 feet or more above the surface are published in Paragraph 6005 of FAA Order 7400.9C dated August 17, 1995, and effective September 16, 1995. The Class E airspace designation listed in this document will be published subsequently in the Order.

The Rule

This amendment to Part 71 of the Federal Aviation Regulations (14 CFR part 71) modifies Class E airspace at Tampa, FL, to accommodate a GPS RWY 18 SIAP and for IFR operations at the Vandenberg Airport. The operating status of the airport will change from VFR to include IFR operations concurrent with publication of this SIAP.

The FAA has determined that this regulation only involves an established body of technical regulations for which frequent and routine amendments are necessary to keep them operationally current. It, therefore, (1) is not a ''significant regulatory action'' under Executive Order 12866; (2) is not a ''significant rule'' under DOT Regulatory Policies and Procedures (44 FR 11034; February 26, 1979); and (3) does not warrant preparation of a regulatory evaluation as the anticipated impact is so minimal. Since this is a routine matter that will only affect air traffic procedures and air navigation, it is certified that this rule will not have a significant economic impact on a substantial number of small entities under the criteria of the Regulatory Flexibility Act.

List of Subjects in 14 CFR Part 71

Airspace, Incorporation by reference, Navigation (air).

Adoption of the Amendment

In consideration of the foregoing, the Federal Aviation Administration amends 14 CFR Part 71 as follows:

PART 71—[AMENDED]

1. The authority citation for 14 CFR Part 71 continues to read as follows:

Authority: 49 U.S.C. 106(g); 40103, 40113, 40120; EO 10854, 24 FR 9565, 3 CFR, 1959–1963 Comp., p. 389; 14 CFR 11.69.

§ 71.1 [Amended]

2. The incorporation by reference in 14 CFR 71.1 of Federal Aviation Administration Order 7400.9C, Airspace Designations and Reporting Points, dated August 17, 1995, and effective September 16, 1995, is amended as follows:

Paragraph 6005 Class E airspace areas extending upward from 700 feet above the surface of the earth.

* * * * *

ASO GA E5 Tampa, FL [Revised]

Tampa International Airport, FL
(Lat. 27°5 8′32″N, long. 82°31′59″W)
St. Petersburg-Clearwater International Airport
(Lat. 27°54′39″N, long. 82°41′14″W)
MacDill AFB
(Lat. 27°50′57″N, long. 82°31′17″W)
Peter O Knight Airport
(Lat. 27°54′56″N, long. 82°26′57″W)
Albert-Whitted Airport
(Lat. 27°45′54″N, long. 82°37′38″W)
Vandenberg Airport
(Lat. 28°00′33″N, long. 82°20′59″W)

That airspace extending upward from 700 feet above the surface within a 7-mile radius of Tampa International Airport, St. Petersburg-Clearwater International Airport, MacDill AFB and Peter O Knight Airport and within a 6.3-mile radius of Albert-Whitted Airport and Vandenberg Airport, excluding that airspace within the Lakeland, FL, Class E airspace area.

* * * * *

Issued in College Park, Georgia, on August 27, 1996.

Benny L. McGlamery,

Acting Manager, Air Traffic Division, Southern Region.

[FR Doc. 96–22837 Filed 9–5–96; 8:45 am]

BILLING CODE 4910–13–M

---

14 CFR Part 71

[Airspace Docket No. 96–ASO–11]

Amendment to Class E Airspace; Smithfield, NC

AGENCY: Federal Aviation Administration (FAA), DOT.

ACTION: Final rule.

SUMMARY: This amendment modifies the Class E airspace area at Smithfield, NC, as a result of an airspace review conducted to accommodate an amendment to the LOC/DME RWY 3 Standard Instrument Approach Procedure (SIAP) for the Smithfield/Johnston County Airport. Less controlled airspace extending upward from 700 feet above the surface (AGL) is needed to accommodate this SIAP and for instrument flight rules (IFR) operations at the airport.

EFFECTIVE DATE: 0901 UTC, December 5, 1996.

FOR FURTHER INFORMATION CONTACT: Benny L. McGlamery, System Management Branch, Air Traffic Division, Federal Aviation Administration, P.O. Box 20636, Atlanta, Georgia 30320; telephone (404) 305–5570.

SUPPLEMENTARY INFORMATION:

History

On July 10, 1996, the FAA proposed to amend Part 71 of the Federal Aviation Regulations (14 CFR Part 71) by modifying Class E airspace at Smithfield, NC (61 FR 36314). This action would provide adequate Class E airspace for IFR operations at the Smithfield/Johnston County Airport.

Interested parties were invited to participate in this rulemaking proceeding by submitting written comments on the proposal to the FAA. No comments objecting to the proposal were received. Designations for Class E airspace extending upward from 700 feet or more above the surface are published in Paragraph 6005 of FAA Order 7400.9C dated August 17, 1995, and effective September 16, 1995. The Class E airspace designation listed in this document will be published subsequently in the Order.

The Rule

This amendment to Part 71 of the Federal Aviation Regulations (14 CFR part 71) modifies Class E airspace at Smithfield, NC, as a result of an airspace review conducted to accommodate a LOC/DME RWY 3 SIAP. Less controlled airspace extending upward from 700 feet AGL is needed to accommodate this SIAP and for IFR operations at the airport.

The FAA has determined that this regulation only involves an established body of technical regulations for which frequent and routine amendments are necessary to keep them operationally current. It, therefore, (1) is not a ''significant regulatory action'' under Executive Order 12866; (2) is not a ''significant rule'' under DOT Regulatory Policies and Procedures (44 FR 11034; February 26, 1979); and (3) does not warrant preparation of a regulatory evaluation as the anticipated impact is so minimal. Since this is a routine matter that will only affect air traffic procedures and air navigation, it is certified that this rule will not have a significant economic impact on a substantial number of small entities under the criteria of the Regulatory Flexibility Act.

List of Subjects in 14 CFR Part 71

Airspace, Incorporation by reference, Navigation (air).

Adoption of the Amendment

In consideration of the foregoing, the Federal Aviation Administration amends 14 CFR Part 71 as follows:

PART 71—[AMENDED]

1. The authority citation for 14 CFR Part 71 continues to read as follows:

Authority: 49 U.S.C. 106(g); 40103, 40113, 40120; EO 10854, 24 FR 9565, 3 CFR, 1959–1963 Comp., P. 389; 14 CFR 11.69.

§ 71.1 [Amended]

2. The incorporation by reference in 14 CFR 71.1 of Federal Aviation Administration Order 7400.9C, Airspace Designations and Reporting Points, dated August 17, 1995, and effective September 16, 1995, is amended as follows:

Paragraph 6005 Class E airspace areas extending upward from 700 feet above the surface of the earth.

* * * * *

ASO NC E5 Smithfield, NC [Revised]

Smithfield/Johnston Airport, NC
(Lat. 35°32′27″ N, long. 78°23′25″ W)

That airspace extending upward from 700 feet above the surface within a 6.5-mile radius of the Smithfield/Johnston County Airport. ASO NC E5 Smithfield, NC [Revised]

* * * * *

Issued in College Park, Georgia, on August 27, 1996.

Benny L. McGlamery

Acting Manager, Air Traffic Manager Southern Region.

[FR Doc. 96–22828 Filed 9–5–96; 8:45 am]

BILLING CODE 4910–13–M

---

14 CFR Part 71

[Airspace Docket No. 96–AGL–1]

Amendment to Class E Airspace; Rochester, MN

AGENCY: Federal Aviation Administration (FAA), DOT.

ACTION: Final rule.

SUMMARY: This action amends Class E airspace at Rochester, MN. Additional controlled airspace is required for the Copter GPS 326 degrees approach to St. Mary's Hospital Heliport. Controlled airspace extending upward from 700 to 1200 feet above ground level (AGL) is needed to contain aircraft executing the approach. The intended affect of this action is to provide segregation of aircraft using instrument approach procedures in instrument conditions from other aircraft operating in visual weather conditions.

EFFECTIVE DATE: 0901 UTC, October 10, 1996.

FOR FURTHER INFORMATION CONTACT: John A. Clayborn, Air Traffic Division, Operations Branch, AGL–530, Federal Aviation Administration, 2300 East Devon Avenue, Des Plaines, Illinois 60018, telephone (847) 294–7568.

SUPPLEMENTARY INFORMATION:

History

On Wednesday, May 29, 1996, the FAA proposed to amend part 71 of the Federal Aviation Regulations (14 CFR part 71) to amend Class E airspace at Rochester, MN (61 FR 26855). The proposal was to add controlled airspace extending upward from 700 to 1200 feet AGL to contain Instrument Flight Rules (IFR) operations in controlled airspace during portions of the terminal operation and while transiting between the enroute and terminal environments.

Interested parties were invited to participate in this rulemaking proceeding by submitting written comments on the proposal to the FAA. No comments objecting to the proposal were received. Class E airspace designations for areas extending upward from 700 feet or more above the surface of the earth are published in paragraph 6005 of FAA Order 7400.9C dated August 17, 1995, and effective September 16, 1995, which is incorporated by reference in 14 CFR 71.1. The Class E airspace designation listed in this document will be published subsequently in the Order.

The Rule

This amendment to part 71 of the Federal Aviation Regulations (14 CFR part 71) amends Class E airspace at Rochester, MN to accommodate IFR, operators executing the Copter GPS 326 degrees approach procedure to St. Mary's Hospital Heliport. Controlled airspace extending upward from 700 to 1200 feet AGL is needed to contain aircraft executing the approach. The area will be depicted on appropriate aeronautical charts thereby enabling pilots to circumnavigate the area or otherwise comply with IFR procedures.

The FAA has determined that this regulation only involves an established body of technical regulations for which frequent and routine amendments are necessary to keep them operationally current. Therefore, this regulation—(1) Is not a ''significant regulatory action'' under Executive Order 12866; (2) is not a ''significant rule'' under DOT Regulatory Policies and Procedures (44 FR 11034; February 26, 1979); and (3) does not warrant preparation of a Regulatory Evaluation as the anticipated impact is so minimal. Since this is a routine matter that will only affect air traffic procedures and air navigation, it is certified that this rule will not have a significant economic impact on a substantial number of small entities under the criteria of the Regulatory Flexibility Act.

List of Subjects in 14 CFR Part 71

Airspace, Incorporation by reference, Navigation (air).

Adoption of the Amendment

In consideration of the foregoing, the Federal Aviation Administration amends 14 CFR part 71 as follows:

PART 71—[AMENDED]

1. The authority citation for 14 part 71 continues to read as follows:

Authority: 49 U.S.C. 106(g), 40103, 40113, 40120; E.O. 10854, 24 FR 9565, 3 CFR, 1959–1963 Comp., p. 389; 14 CFR 11.69.

§ 71.1 [Amended]

2. The incorporation by reference in 14 CFR 71.1 of the Federal Aviation Administration Order 7400.9C, Airspace Designations and Reporting Points, dated August 17, 1995, and effective September 16, 1995, is amended as follows:

Paragraph 6005 Class E airspace areas extending upward from 700 feet or more above the surface of the earth.

* * * * *

AGL MN E5 Rochester, MN [Revised]

Rochester International Airport, MN
(Lat. 43°54′32″ N, long. 92°29′53″ W)
St. Mary's Hospital Heliport, MN
(Lat. 44°01′11″ N, long. 92°28′59″ W)
Rochester VOR/DME
(Lat. 43°46′58′ N, long. 92°35′49″ W)

That airspace extending upward from 700 feet above the surface within a 6.7-mile radius of the Rochester International Airport and within 3.2 miles each side of the Rochester VOR/DME 028 radial extending from the 6.7-mile radius to 7.9 miles southwest of the airport, within 5.3 miles southwest and 4 miles northeast of the Rochester northwest localizer course extending from the 6.7-mile radius to 20 miles northwest of the airport, within 5.3 miles northeast and 4 miles southwest of the Rochester southeast localizer course extending from the 6.7-mile radius to 17.3 miles southeast of the airport and within a 6.4-mile radius of the St. Mary's Hospital Heliport.

* * * * *

Issued in Des Plaines, Illinois on August 20, 1996.

Maureen Woods,

Manager, Air Traffic Division.

[FR Doc. 96–22833 Filed 9–5–96; 8:45 am]

BILLING CODE 4910–13–M

Coast Guard

33 CFR Part 165

[CGD01–96–109]

RIN 2115–AA97

Safety Zone: Grande Fiesta Italiana Fireworks, Hempstead Harbor, NY

AGENCY: Coast Guard, DOT.

ACTION: Temporary final rule.

SUMMARY: The Coast Guard is establishing a temporary safety zone for the Grande Fiesta Italiana fireworks display located in Hempstead Harbor, New York. The safety zone is in effect from 9 p.m. until 10:30 p.m. on Saturday, September 7, 1996. The safety zone temporarily closes all waters, shore to shore, within a 300 yard radius of a fireworks barge anchored approximately 300 yards north of Bar Beach, Port Washington, in Hempstead Harbor New York.

EFFECTIVE DATE: This rule is effective from 9 p.m. until 10:30 p.m. on Saturday, September 7, 1996.

FOR FURTHER INFORMATION CONTACT: Lieutenant (Junior Grade) D. D. Gefell, Waterways Oversight Branch, Waterways Management Division, Coast Guard Activities New York, (212) 668–7906.

SUPPLEMENTARY INFORMATION:

Regulatory History

Pursuant to 5 U.S.C. 553, a notice of proposed rulemaking (NPRM) was not published for this regulation. Good cause exists for not publishing a NPRM and for making this regulation effective less than 30 days after Federal Register publication. Due to the date on which complete information regarding this event was received, there was insufficient time to draft and publish a NPRM. The delay that would be required to provide a 30 day delay effective date would cause the event to be cancelled. Cancellation of this event is contrary to public interest because the event is intended for public entertainment.

Background and Purpose

Bay Fireworks Company, Inc., submitted an Application for Approval of Marine Event to hold a fireworks display on the waters of Hempstead Harbor. The fireworks program is being sponsored by the Sons of Italy of Port Washington, NY. This regulation establishes a temporary safety zone in all waters of Hempstead Harbor within a 300 yard radius of the fireworks barge anchored approximately 300 yards north of Bar Beach, Port Washington, NY, at or near 40°49′52″N latitude, 73°39′10″W longitude (NAD 1983). The safety zone is in effect from 9 p.m. until 10:30 p.m. on Saturday, September 7, 1996. The safety zone prevents vessels from transiting this portion of Hempstead Harbor, and is needed to protect mariners from the hazards associated with fireworks exploding in the area.

Regulatory Evaluation

This regulation is not a significant regulatory action under section 3(f) of Executive Order 12866 and does not require an assessment of potential costs and benefits under section 6(a)(3) of that order. It has been exempted from review by the Office of Management and Budget under that order. It is not significant under the regulatory policies and procedures of the Department of Transportation (DOT) (44 FR 11040; February 26, 1979). The Coast Guard expects the economic impact of this regulation to be so minimal that a full Regulatory Evaluation under paragraph 10(e) of the regulatory policies and procedures of DOT is unnecessary. This regulation closes a portion of Hempstead Harbor, north of Bar Beach to vessel traffic from 9 p.m. until 10:30 p.m. on Saturday, September 7, 1996. This portion of Hempstead Harbor has limited commercial traffic and is used primarily by recreational vessels. Although the regulation prevents traffic from transiting this area, the effect of the regulation will not be significant for several reasons: the duration of the event is limited; the event is at a late hour; the amount of commercial traffic in the area is minimal; and the extensive, advance advisories which will be made.

Small Entities

Under the Regulatory Flexibility Act (5 U.S.C. 601 *et seq.*), the Coast Guard must consider whether this regulation will have a significant economic impact on a substantial number of small entities. ''Small entities'' may include (1) small businesses and not-for-profit organizations that are not independently owned and operated and are not dominant in their fields and (2) governmental jurisdictions with populations of less than 50,000.

For reasons set forth in the Regulatory Evaluation, the limited duration and commercial traffic, Coast Guard certifies under 5 U.S.C. 605(b) that this regulation will not have a significant economic impact on a substantial number of small entities.

Collection of Information

This regulation contains no collection of information requirements under the Paperwork Reduction Act (44 U.S.C. 3501 *et seq.*).

Federalism

The Coast Guard has analyzed this action in accordance with the principles and criteria contained in Executive Order 12612 and has determined that this regulation does not have sufficient federalism implications to warrant the preparation of a Federalism Assessment.

Environment

The Coast Guard has considered the environmental impact of this regulation and concluded that under section 2.B.2.e.(34)(g) of Commandant Instruction M16475.1B (as revised by 59 FR 38654, July 29, 1994), the promulgation of this regulation is categorically excluded from further environmental documentation. A Categorical Exclusion Determination and Environmental Analysis Checklist are included in the docket.

List of Subjects in 33 CFR Part 165

Harbors, Marine safety, Navigation (water), Reporting and recordkeeping requirements, Security measures, Waterways.

Regulation

For reasons set out in the preamble, the Coast Guard amends 33 CFR Part 165 as follows:

PART 165—[AMENDED]

1. The authority citation for Part 165 continues to read as follows:

Authority: 33 U.S.C. 1231; 50 U.S.C. 191; 33 CFR 1.05–1(g), 6.04–1, 6.04–6, and 160.5; 49 CFR 1.46.

2. A temporary section 165.T01–109, is added to read as follows:

§ 165.T01–109 Safety Zone: Grande Fiesta Italiana Fireworks Display, Hempstead Harbor, New York.

(a) *Location.* The waters of Hempstead Harbor, shore to shore, within a 300 yard radius of a fireworks barge anchored approximately 300 yards north of Bar Beach, Port Washington, New York, at or near 40°49′52″N latitude 73°39′10″W longitude (NAD 1983).

(b) *Effective date.* This section is effective from 9 p.m. until 10:30 p.m. on Saturday, September 7, 1996.

(c) *Regulations.*

(1) The general regulations contained in 33 C.F.R. 165.23 apply.

(2) All persons and vessels shall comply with the instructions of the

Coast Guard Captain of the Port or the designated on-scence patrol personnel. Coast Guard patrol personnel include commissioned, warrant, and petty officers of the Coast Guard. Upon being hailed by a Coast Guard vessel via siren, radio, flashing light, or other means, the operator of a vessel shall proceed as directed.

Dated: August 27, 1996.

Richard C. Vlaun,

Captain, U.S. Coast Guard, Captain of the Port, New York.

[FR Doc. 96–22839 Filed 9–5–96; 8:45 am]

BILLING CODE 4910–14–M

ENVIRONMENTAL PROTECTION AGENCY

40 CFR Part 52

[WA43–7116; FRL–5605–8]

State Implementation Plan: Washington; Withdrawal

AGENCY: Environmental Protection Agency.

ACTION: Final rule; withdrawal.

SUMMARY: Due to an adverse comment, EPA is withdrawing the effective date for the approval of the Inspection and Maintenance (I/M) State Implementation Plan (SIP) for Washington State, submitted by the Washington Department of Ecology to satisfy the requirements of sections 182(b)(4) and 182(c)(3) of the Clean Air Act as amended and Federal I/M rule 40 CFR part 51, subpart S. The original action was published in the Federal Register on July 23, 1996, as a direct final rule, 61 FR 38086. As stated in the Federal Register document, if adverse or critical comments were received by August 22, 1996, the effective date would be delayed and timely notice would be published in the Federal Register. Therefore, due to receiving an adverse comment within the comment period, EPA is withdrawing the final rule and will address the comments received in a subsequent final rule based on the proposed rule also published on July 23, 1996, 61 FR 38129. EPA will not institute a second comment period on this document.

EFFECTIVE DATE: This withdrawal is effective on September 6, 1996.

FOR FURTHER INFORMATION CONTACT: Montel Livingston, Office of Air Quality (OAQ–107), EPA, Seattle, Washington 98101, (206) 553–0180.

SUPPLEMENTARY INFORMATION: See the information provided in the direct final rule located in the final rules section of the July 23, 1996 Federal Register, and in the short informational document located in the proposed rule section of the July 23, 1996 Federal Register.

List of Subjects in 40 CFR Part 52

Environmental protection, Air pollution control, Carbon monoxide, Hydrocarbons, Incorporation by Reference, Nitrogen dioxide, Ozone, Volatile organic compounds.

Dated: August 27, 1996.

Charles Findley,

Acting Regional Administrator.

[FR Doc. 96–22655 Filed 9–5–96; 8:45 am]

BILLING CODE 6560–50–P

40 CFR Part 52

[WA47–7120; FRL–5605–7]

State Implementation Plan: Washington; Withdrawal

AGENCY: Environmental Protection Agency.

ACTION: Final rule; withdrawal.

SUMMARY: Due to an adverse comment, EPA is withdrawing the effective date for the approval of the attainment demonstration portion of the Puget Sound carbon monoxide (CO) State Implementation Plan (SIP) for Washington State, submitted by the Washington Department of Ecology for the purpose of documenting attainment of the national ambient air quality standards (NAAQS) for CO to satisfy certain federal requirements for an approvable nonattainment area CO SIP for the Puget Sound nonattainment area. The original action was published in the Federal Register on July 25, 1996, as a direct final rule, 61 FR 38597. As stated in the Federal Register document, if adverse or critical comments were received by August 26, 1996, the effective date would be delayed and timely notice would be published in the Federal Register. Therefore, due to receiving an adverse comment within the comment period, EPA is withdrawing the final rule and will address the comments received in a subsequent final rule based on the proposed rule also published on July 25, 1996, 61 FR 38683. EPA will not institute a second comment period on this document.

EFFECTIVE DATE: This withdrawal is effective on September 6, 1996.

FOR FURTHER INFORMATION CONTACT: Montel Livingston, Office of Air Quality (OAQ–107), EPA, Seattle, Washington 98101, (206) 553–0180.

SUPPLEMENTARY INFORMATION: See the information provided in the direct final rule located in the final rules section of the July 25, 1996 Federal Register, and in the short informational document located in the proposed rule section of the July 25, 1996 Federal Register.

List of Subjects in 40 CFR Part 52

Environmental protection, Air pollution control, Carbon monoxide, Incorporation by Reference, Intergovernmental relations, Reporting and recordkeeping requirements.

Dated: August 27, 1996.

Charles Findley,

Acting Regional Administrator.

[FR Doc. 96–22656 Filed 9–5–96; 8:45 am]

BILLING CODE 6560–50–P

40 CFR Part 52

[TN–146–2–9608a; FRL–5554–6]

Approval and Promulgation of Air Quality Implementation Plans, Tennessee; Approval of Revisions To Permit Requirements, Definitions and Administrative Requirements

AGENCY: Environmental Protection Agency (EPA).

ACTION: Direct final rule.

SUMMARY: EPA is approving revisions to the permit requirements, definitions, and administrative requirements for the Nashville/Davidson County portion of the Tennessee State Implementation Plan (SIP). On November 16, 1994, the State submitted revisions to the Nashville/Davidson portion of the Tennessee SIP on behalf of Nashville/Davidson County. These were revisions to the permit requirements for major sources of air pollution, including revisions to the general definitions, permit requirements, the Board's powers and duties, the variances and hearings procedures, the measurement and reporting of emissions, and the testing procedures. At this time, EPA is acting on revisions submitted on November 16, 1994. EPA is approving all of the submitted revisions except those which were submitted to meet the requirements for enhanced monitoring. These will not be acted on at this time.

DATES: This final rule is effective November 5, 1996 unless adverse or critical comments are received by October 7, 1996. If the effective date is delayed, timely notice will be published in the Federal Register.

ADDRESSES: Written comments on this action should be addressed to Karen C. Borel, at the EPA Regional Office listed below. Copies of the documents relative to this action are available for public inspection during normal business hours at the following locations. The

interested persons wanting to examine these documents should make an appointment with the appropriate office at least 24 hours before the visiting day.

Air and Radiation Docket and Information Center (Air Docket 6102), U.S. Environmental Protection Agency, 401 M Street, SW, Washington, DC 20460

Environmental Protection Agency, Region 4 Air Programs Branch, 345 Courtland Street, NE., Atlanta, Georgia 30365

Bureau of Environmental Health Services, Metropolitan Health Department, Nashville-Davidson County, 311—23rd Avenue, North, Nashville, Tennessee 37203

Tennessee Department of Environment and Conservation, Division of Air Pollution Control, 9th Floor L & C Annex, 401 Church Street, Nashville, Tennessee 37243–1531.

FOR FURTHER INFORMATION CONTACT: Karen C. Borel, Regulatory Planning and Development Section, Air Programs Branch, Air, Pesticides & Toxics Management Division, Region 4 Environmental Protection Agency, 345 Courtland Street, N.E., Atlanta, Georgia 30365.The telephone number is 404/347–3555 x4197. Reference file TN–146–2–9608a.

SUPPLEMENTARY INFORMATION: The State of Tennessee submitted revisions to the Nashville/Davidson County portion of the Tennessee SIP to EPA on November 16, 1994. EPA found these submittals to be complete on December 21, 1994. EPA approved several portions of this submittal on July 28, 1995 (60 FR 38712), which were required for Nashville/Davidson County's Federally enforceable local operating permit (FELOP) program. At that time, EPA also approved Nashville/Davidson County's FELOP program pursuant to section 112 of the Clean Air Act as amended in 1990 (CAA).

A. SIP Revisions

The Nashville/Davidson County Board of Health, officially adopted proposed amendments to the Chapter 10.56, ''Air Pollution Control'' of the Metropolitan Code of Laws on October 6, 1994. These regulatory revisions to their Chapter 10.56 make changes to some definitions, to their requirements for public hearings, and to some testing procedure requirements. These revisions are the remainder of their plan to bring the SIP into accordance with title I requirements and to support their title V program. EPA is approving all of the following revisions except where it is specifically noted that the proposed revisions are not receiving action.

Section 10.56.010—Definitions

Definitions of ''Legally Enforceable'' and ''Uniform Administrative Procedures Act'' were added. The definition of legally enforceable states that ''all limitations and conditions which are enforceable by the Director or the Administrator * * *'' in accordance with the requirements of the CAA. The Uniform Administrative Procedures Act is defined as the Tennessee Code Annotated Title 4, Chapter 5.

Section 10.56.020—Construction Permits

Paragraph (A)(2) was revised to require that all hearings now be conducted in accordance with the Uniform Administrative Procedures Act. This formerly stated that the hearing would simply be conducted before the Nashville/Davidson County Metropolitan Board of Health.

Paragraph (N) was added to this section. This paragraph adds the requirement for monthly notification of the public, through newspaper advertisements, of the applicants seeking to obtain construction or modification permits of air pollution sources.

Section 10.56.090.C.4—Board—Powers and Duties

This paragraph has been revised to change the appeal process for civil penalties. This process was formerly conducted in accordance with the provisions of another section in the SIP (10.56.020). This will now be done according to the Uniform Administrative Procedures Act.

Section 10.56.110—Rules and Regulations—Hearing Procedures

Paragraph (A) has been revised to allow the Board to conduct a hearing in accordance with the Uniform Administrative Procedures Act.

In paragraphs (B) and (B)(2), references to ''by the Board'' have been deleted. This was done because of the new requirements to do hearings in accordance with the Uniform Administrative Procedures Act, as were previously discussed in the above paragraphs.

Section 10.56.120.B—Complaint Notice—Hearings Procedure

These hearings will now be conducted in accordance with the contested cases provisions in the Uniform Administrative Procedures Act, as previously defined. The specific requirements for conducting a complaint hearing, as defined in subparagraphs (1) through (7) have been deleted. These are now defined in the Uniform Administrative Procedures Act.

Section 10.56.130.D.2—Variances—Hearings Procedure

These public hearings will now be conducted in accordance with the Uniform Administrative Procedures Act.

Section 10.56.290.D and E—Measurement and Reporting of Emissions

The revisions to Section 10.56.290 for enhanced monitoring are in response to a May 21, 1994, SIP call from EPA Region 4 which was based on a proposed rule. However, the EPA is taking no action on revisions to Section 10.56.290 of the Nashville/Davidson County SIP at this time because the federal requirement to which the revision pertains is not yet final.

Section 10.56.300.B—Testing Procedures

This paragraph addresses the requirements for demonstrating compliance with emission standards. The phrase ''The determination of'' has been deleted and replaced with ''Source testing conducted for the purpose of demonstrating.''

Final Action

EPA is fully approving the submitted revisions to the Nashville/Davidson County portion of the Tennessee State Implementation Plan (SIP) with the exception of the enhanced monitoring provisions in Section 10.56.290, which are not being acted on in this rulemaking.

The EPA is publishing this action without prior proposal because the Agency views this as a noncontroversial action and anticipates no adverse comments. However, in a separate document in this Federal Register publication, the EPA is proposing to approve the SIP revision should adverse or critical comments be filed. This action will be effective on November 5, 1996 unless, by October 7, 1996, adverse or critical comments are received.

If the EPA receives such comments, this action will be withdrawn before the effective date by publishing a subsequent document that will withdraw the final action. All public comments received will then be addressed in a subsequent final rule based on the proposed rule. The EPA will not institute a second comment period on this action. Any parties interested in commenting on this action should do so at this time. If no such comments are received, the public is advised that this action will be effective on November 5, 1996.

Under section 307(b)(1) of the Act, 42 U.S.C. 7607 (b)(1), petitions for judicial review of this action must be filed in the United States Court of Appeals for the appropriate circuit by [insert date 60 days from date of publication]. Filing a petition for reconsideration by the Administrator of this final rule does not affect the finality of this rule for the purposes of judicial review nor does it extend the time within which a petition for judicial review may be filed, and shall not postpone the effectiveness of such rule or action. This action may not be challenged later in proceedings to enforce its requirements. [See section 307(b)(2) of the Act, 42 U.S.C. 7607 (b)(2).]

This action has been classified as a Table 3 action for signature by the Regional Administrator under the procedures published in the Federal Register on January 19, 1989 (54 FR 2214–2225), as revised by a July 10, 1995, memorandum from Mary Nichols, Assistant Administrator for Air and Radiation. The Office of Management and Budget (OMB) has exempted this regulatory action from E.O. 12866 review.

Nothing in this action should be construed as permitting or allowing or establishing a precedent for any future request for revision to any SIP. Each request for revision to any SIP shall be considered separately in light of specific technical, economic, and environmental factors and in relation to relevant statutory and regulatory requirements.

Under the Regulatory Flexibility Act, 5 U.S.C. 600 et seq., EPA must prepare a regulatory flexibility analysis assessing the impact of any proposed or final rule on small entities. 5 U.S.C. 603 and 604. Alternatively, EPA may certify that the rule will not have a significant economic impact on a substantial number of small entities. Small entities include small business, small not-for-profit enterprises, and government entities with jurisdiction over populations of less than 50,000.

SIP approvals under sections 110 and subchapter I, part D of the Act do not create any new requirements, but simply approve requirements that the State is already imposing. Therefore, because the Federal SIP-approval does not impose any new requirements, the Administrator certifies that it does not have a significant impact on any small entities affected. Moreover, due to the nature of the Federal-state relationship under the Act, preparation of a regulatory flexibility analysis would constitute Federal inquiry into the economic reasonableness of state action. The Act forbids EPA to base its actions concerning SIPs on such grounds. *Union Electric Co.* v. *U.S.E.P.A.*, 427 U.S. 246, 256–66 (1976); 42 U.S.C. 7410(a)(2) and 7410(k)(3).

Under Sections 202, 203, and 205 of the Unfunded Mandates Reform Act of 1995 (''Unfunded Mandates Act''), signed into law on March 22, 1995, EPA must undertake various actions in association with proposed or final rules that include a Federal mandate that may result in estimated costs of $100 million or more to the private sector, or to State, local, or tribal governments in the aggregate.

Through submission of this state implementation plan or plan revision, the State and any affected local or tribal governments have elected to adopt the program provided for under Section 165 of the CAA. These rules may bind State, local and tribal governments to perform certain actions and also require the private sector to perform certain duties. EPA has determined that the rules being approved by this action will impose no new requirements, since such sources are already subject to these regulations under State law. Accordingly, no additional costs to State, local, or tribal governments, or to the private sector, result from this action.

Under 5 U.S.C. 801(a)(1)(A) as added by the Small Business Regulatory Enforcement Fairness Act of 1996, EPA submitted a report containing this rule and other required information to the U.S. Senate, the U.S. House of Representatives and the Comptroller General of the General Accounting Office prior to publication of the rule in today's Federal Register. This rule is not a ''major rule'' as defined by 5 U.S.C. 804(2).

List of Subjects in 40 CFR Part 52

Air pollution control, Incorporation by reference, Reporting and recordkeeping requirements.

Dated: July 18, 1996.

A. Stanley Meiburg,

Acting Regional Administrator.

Part 52 of chapter I, title 40, *Code of Federal Regulations*, is amended as follows:

PART 52—[AMENDED]

1. The authority citation for part 52 continues to read as follows:

Authority: 42.U.S.C. 7401–7671q.

Subpart RR—[Amended]

2. Section 52.2220 is amended by adding paragraph (c)(141) to read as follows:

§ 52.2220 Identification of plan.

* * * * *

(c) * * *

(141) On November 16, 1994, the State submitted revisions to the Nashville/Davidson portion of the Tennessee State Implementation Plan (SIP) on behalf of Nashville/Davidson County. These were revisions to the permit requirements for major sources of air pollution, including revisions to the general definitions, permit requirements, the Board's powers and duties, the variances and hearings procedures, the measurement and reporting of emissions, and the testing procedures. These revisions incorporate changes to Nashville's Chapter 10.56 which are required in the Clean Air Act as amended in 1990 and 40 CFR part 51, subpart I.

(i) Incorporation by reference.

(A) Code of Laws of the Metropolitan Government of Nashville and Davidson County, Tennessee, Chapter 10.56, except Section 10.56.290, Air Pollution Control, approved on October 6, 1994, except Section 10.56.010, definition of ''Regulated Pollutant''; Section 10.56.050, paragraphs (C), (D), and (E); Section 10.56.080.

(ii) Other material. None.

[FR Doc. 96–22807 Filed 9–5–96; 8:45 am]

BILLING CODE 6560–50–P

---

40 CFR Part 52

[TN 167–1–9627a; FRL–5606–9]

Control Strategy: Ozone (O_3); Tennessee

AGENCY: Environmental Protection Agency (EPA).

ACTION: Final rule; withdrawal.

SUMMARY: Due to adverse comments, EPA is withdrawing the approval of an exemption request from the oxides of nitrogen (NO_X) reasonably available control technology (RACT) and conformity requirements of the Clean Air Act as amended in 1990 (CAA) for the five county Middle Tennessee (Nashville) moderate ozone (O_3) nonattainment area. The original action was published in the Federal Register on July 11, 1996, as a direct final rule. As stated in the Federal Register document, if adverse or critical comments were received by August 12, 1996, the effective date would be delayed and timely notice would be published in the Federal Register. Therefore, due to receiving adverse comments within the comment period, EPA is withdrawing the final rule and will address all public comments received in a subsequent final rule based on the proposed rule also

published on July 11, 1996. EPA will not institute a second comment period on this document.

EFFECTIVE DATE: This withdrawal is effective September 6, 1996.

FOR FURTHER INFORMATION CONTACT: William C. Denman, Regulatory Planning and Development Section, Air Programs Branch, United States Environmental Protection Agency, Region 4, Atlanta Federal Center, 100 Alabama Street, SW, Atlanta, Georgia 30303–3104, (404) 562–9030.

SUPPLEMENTARY INFORMATION: See the information provided in the direct final rule located in the final rules section of the July 11, 1996 Federal Register at (61 FR 36502), and in the document located in the proposed rule section of the July 11, 1996 Federal Register at (61 FR 36534).

List of Subjects in 40 CFR Part 52

Environmental protection, Air pollution control, Hydrocarbons, Incorporation by reference, Intergovernmental relations, Ozone.

Dated: August 29, 1996.

A. Stanley Meiburg,

Acting Regional Administrator.

[FR Doc. 96–22809 Filed 9–5–96; 8:45 am]

BILLING CODE 6560–50–P

---

40 CFR Parts 52 and 81

[FRL–5560–4]

Approval and Promulgation of Implementation Plans; Designation of Areas for Air Quality Planning Purposes; Wyoming; Corrections

AGENCY: Environmental Protection Agency (EPA).

ACTION: Direct final rulemaking.

SUMMARY: EPA is promulgating corrections to the State Implementation Plan (SIP) for the State of Wyoming regarding the State's ambient standards for fluorides and hydrogen sulfide and the State's odor control regulation. EPA has determined that these rules were erroneously incorporated into the SIP. EPA is removing these rules from the approved Wyoming SIP because the rules do not have a reasonable connection to the national ambient air quality standards (NAAQS) and related air quality goals of the Clean Air Act. The intended effect of this correction to the SIP is to make the SIP consistent with the requirements of the Clean Air Act, as amended in 1990 (''the Act''), regarding EPA action on SIP submittals and SIPs for national primary and secondary ambient air quality standards.

In addition, EPA is amending the boundary description for the ''Powder River Basin'' PM–10 unclassifiable area in 40 CFR 81.351. EPA promulgated revisions to 40 CFR 81.351 in a November 3, 1995 rulemaking, and EPA erroneously published an incorrect boundary description for the Powder River Basin area. This document corrects that error.

DATES: This action will become effective on November 5, 1996, unless adverse comments are received within 30 days of publication. If the effective date is delayed, timely notice will be published in the Federal Register.

ADDRESSES: Copies of the documents relative to this action are available for inspection during normal business hours at the following location: Air Program, Environmental Protection Agency, Region VIII, 999 18th Street, Suite 500, Denver, Colorado 80202–2466.

FOR FURTHER INFORMATION CONTACT: Vicki Stamper, 8P2–A, Environmental Protection Agency, Region VIII, 999 18th Street, Suite 500, Denver, Colorado 80202–2466, (303) 312–6445.

SUPPLEMENTARY INFORMATION:

I. Corrections to SIP

The Act was first amended in 1970. At this time, a large number of SIPs were submitted to EPA to fulfill the new Federal requirements. In many cases, states and districts submitted their entire programs, including many elements not required pursuant to the Act. Due to resource constraints at that time, EPA's review of these submittals focused primarily on the required technical, legal, and enforcement elements of the submittals. At the time, EPA did not perform a detailed review of the numerous provisions submitted, to determine if each provision was related to protection of the NAAQS. Provisions approved as part of states' SIPs should generally be related to attainment and maintenance of the NAAQS, consistent with the authority in section 110 of the Act under which these plans are approved by EPA.

During a recent review of the contents of the Wyoming SIP, EPA determined that three provisions of the State's rules were approved as part of the SIP which did not have a reasonable connection to the NAAQS-related air quality goals of the Act. These State rules include the ambient standard for hydrogen sulfide in Section 7 of the Wyoming Air Quality Standards and Regulations (WAQSR), the 1972 version of the ambient standard for fluorides in Section 11 of the WAQSR,[1] and the odor control rules in Section 16 of the WAQSR. In addition, documents included in the State's November 19, 1993 title V operating permit program submittal indicated that the State did not consider these three rules part of the federally-approved SIP. EPA consequently notified the State of this discrepancy in a June 26, 1995 letter and offered to correct the SIP pursuant to section 110(k)(6) of the Act by removing these three rules from the SIP, since they are not reasonably connected to the NAAQS-related air quality goals of the Act. The State responded in a letter dated September 19, 1995 requesting that EPA remove these three provisions from the approved SIP.

Section 110(k)(6) of the amended Act provides: Whenever the Administrator determines that the Administrator's action approving, disapproving, or promulgating any plan or plan revision (or part thereof), area designation, redesignation, classification, or reclassification was in error, the Administrator may in the same manner as the approval, disapproval, or promulgation revise such action as appropriate without requiring any further submission from the State. Such determination and the basis thereof shall be provided to the State and public.

Since the State of Wyoming's rules for hydrogen sulfide ambient standards, fluoride ambient standards, and odor control have no reasonable connection to the NAAQS-related air quality goals of the Act and since the State has requested that EPA remove these rules from the approved SIP, EPA has found that approval of these State rules was in error. Consequently, EPA is removing Sections 7, 11, and 16 of the WAQSR from the approved Wyoming SIP pursuant to section 110(k)(6) of the Act.

II. Correction of Boundary Description for the Powder River Basin Area

On November 3, 1995, EPA promulgated revisions to the State of Wyoming's PM–10 area designation table in 40 CFR 81.351 pursuant to the State's adoption and EPA's approval of prevention of significant deterioration (PSD) increments for PM–10 (see 60 FR 55800). In that notice, EPA cited an earlier and incorrect boundary description for the area designated as the ''Powder River Basin'' in Campbell and Converse counties. EPA promulgated a revised boundary description for the Powder River Basin area on September 12, 1995 (60 FR 47299), and that revised boundary

[1] Section 11 of the WAQSR was amended by the State in 1986, but that version was never submitted to, or approved by, EPA as part of the SIP for Wyoming.

should have been reflected in the November 3, 1995 rulemaking. Therefore, this notice corrects the boundary description for the Powder River Basin area to reflect the September 12, 1995 rulemaking.

III. Final Action

EPA is removing Sections 7, 11, and 16 of the WAQSR from the approved Wyoming SIP pursuant to section 110(k)(6) of the Act. In addition, EPA is correcting the boundary description for the Powder River Basin PM–10 unclassifiable area in 40 CFR 81.351 to reflect the boundary description promulgated for the area on September 12, 1995 (60 FR 47299).

The EPA is publishing this action without prior proposal because the Agency views this as a noncontroversial amendment and anticipates no adverse comments. However, in a separate document in this Federal Register publication, EPA is proposing to correct the SIP should adverse or critical comments be filed. Under the procedures established in the May 10, 1994 Federal Register (59 FR 24054), this action will be effective November 5, 1996, unless, by October 7, 1996, adverse or critical comments are received.

If such comments are received, this action will be withdrawn before the effective date by publishing a subsequent document that will withdraw the final action. All public comments received will then be addressed in a subsequent final rule based on this action serving as a proposed rule. EPA will not institute a second comment period on this action. Any parties interested in commenting on this action should do so at this time. If no such comments are received, the public is advised that this action will be effective on November 5, 1996.

Nothing in this action should be construed as permitting or allowing or establishing a precedent for any future request for revision to any SIP. Each request for revision to a SIP shall be considered separately in light of specific technical, economic, and environmental factors and in relation to relevant statutory and regulatory requirements.

IV. Administrative Requirements

A. Executive Order 12866

This action has been classified as a Table 3 action for signature by the Regional Administrator under the procedures published in the Federal Register on January 19, 1989 (54 FR 2214–2225), as revised by a July 10, 1995 memorandum from Mary Nichols, Assistant Administrator for Air and Radiation. The Office of Management and Budget (OMB) has exempted this regulatory action from E.O. 12866 review.

B. Regulatory Flexibility Act

Under the Regulatory Flexibility Act, 5 U.S.C. 600, *et seq.*, EPA must prepare a regulatory flexibility analysis assessing the impact of any proposed or final rule on small entities. 5 U.S.C. 603 and 604. Alternatively, EPA may certify that the rule will not have a significant economic impact on a substantial number of small entities. Small entities include small businesses, small not-for-profit enterprises, and government entities with jurisdiction over populations of less than 50,000. This action does not impose any new requirements. Therefore, the Administrator certifies that this action will not have a significant impact on a substantial number of small entities.

C. Unfunded Mandates

Under section 202 of the Unfunded Mandates Reform Act of 1995 (''Unfunded Mandates Act''), signed into law on March 22, 1995, EPA must prepare a budgetary impact statement to accompany any proposed or final rule that includes a Federal mandate that may result in estimated costs to State, local, or tribal governments in the aggregate; or to the private sector, of $100 million or more. Under section 205, EPA must select the most cost-effective and least burdensome alternative that achieves the objectives of the rule and is consistent with statutory requirements. Section 203 requires EPA to establish a plan for informing and advising any small governments that may be significantly or uniquely impacted by the rule.

EPA has determined that this correction action promulgated does not include a Federal mandate that may result in estimated costs of $100 million or more to either State, local, or tribal governments in the aggregate, or to the private sector. This Federal action corrects this state implementation plan, pursuant to section 110(k)(6) of the Act, by removing three State rules that were erroneously incorporated into the SIP. Thus, this action will impose no new requirements. Accordingly, no additional costs to State, local, or tribal governments, or to the private sector, result from this action.

D. Submission to Congress and the General Accounting Office

Under 5 U.S.C. 801(a)(1)(A) as added by the Small Business Regulatory Enforcement Fairness Act of 1996, EPA submitted a report containing this rule and other required information to the U.S. Senate, the U.S. House of Representatives, and the Comptroller General of the General Accounting Office prior to publication of the rule in today's Federal Register. This rule is not a ''major rule'' as defined by 5 U.S.C. 804(2).

E. Petitions for Judicial Review

Under section 307(b)(1) of the Clean Air Act, petitions for judicial review of this action must be filed in the United States Court of Appeals for the appropriate circuit by November 5, 1996. Filing a petition for reconsideration by the Administrator of this final rule does not affect the finality of this rule for the purposes of judicial review nor does it extend the time within which a petition for judicial review must be filed, and shall not postpone the effectiveness of such rule or action. This action may not be challenged later in proceedings to enforce its requirements (see section 307(b)(2)).

List of Subjects

40 CFR Part 52

Environmental protection, Air pollution control, Particulate matter, Reporting and recordkeeping requirements, Volatile organic compounds.

40 CFR Part 81

Air pollution control, National parks, Wilderness areas.

Dated: August 14, 1996.

Jack W. McGraw,

Acting Regional Administrator.

Title 40, chapter I of the Code of Federal Regulations is amended as follows:

PART 52—[AMENDED]

1. The authority citation for part 52 continues to read as follows:

Authority: 42 U.S.C. 7401–7671q.

Subpart ZZ—Wyoming

2. A new § 52.2634 is added to read as follows:

§ 52.2634 Correction of approved plan.

The following rules of the Wyoming Air Quality Standards and Regulations have been removed from the approved plan pursuant to section 110(k)(6) of the Clean Air Act (as amended in 1990): Section 7, Hydrogen Sulfide; Section 11, Fluorides; and Section 16, Odors.

PART 81—[AMENDED]

1. The authority citation for part 81 continues to read as follows:

Authority: 42 U.S.C. 7401–7671q.

2. In § 81.351, the Wyoming PM–10 table is amended by revising the entry for ''Powder River Basin'' to read as follows:

§ 81.351 Wyoming.

* * * * *

WYOMING—PM–10

Designated area	Designation		Classification	
	Date	Type	Date	Type
* * * *	*	*		*
Campbell County (part)	11/15/90	Unclassifiable	.....	
Converse County (part).				
That area bounded by Township 40 through 52 North, and Ranges 69 through 73 West, inclusive of the Sixth Principal Meridian, Campbell and Converse Counties, excluding the areas defined as the Pacific Power and Light Area, the Hampshire Energy Area, and the Kennecott/Puron PSD Baseline Area.—Powder River Basin.				
* * * *	*	*		*

* * * * *

[FR Doc. 96–22645 Filed 9–5–96; 8:45 am]

BILLING CODE 6560–50–P

[FRL–5604–9]

40 CFR Part 300

National Oil and Hazardous Substances Contingency Plan; National Priorities List Update

AGENCY: Environmental Protection Agency.

ACTION: Notice of deletion of Whiteford Sales & Service, Inc., site from the National Priorities List.

SUMMARY: The U.S. Environmental Protection Agency (EPA) Region 5 announces the deletion of the Whiteford Sales & Service, Inc., (WSS) site from the National Priorities List (NPL). The NPL is Appendix B of 40 CFR Part 300 which is the National Oil and Hazardous Substances Pollution Contingency Plan (NCP), which EPA promulgated pursuant to Section 105 of the Comprehensive Environmental Response, Compensation, and Liability Act of 1980 (CERCLA), as amended. This action is being taken by EPA and the State of Indiana because it has been determined that all appropriate Fund-financed responses at the WSS site under CERCLA have been implemented, that the WSS site poses no significant threat to public health or the environment, and that no further clean-up action at the site is appropriate.

EFFECTIVE DATE: September 6, 1996.

FOR FURTHER INFORMATION CONTACT: Mary Tierney, U.S. EPA Region 5 (SR–6J), 77 W. Jackson Blvd., Chicago, IL 60604; (312) 886–4785. Information on the site is available at the local information repository located at: The St. Joseph County Public Library, Main Branch, 122 W. Wayne St., South Bend, Indiana. Requests for copies of documents should be directed in writing to the Regional Docket Office. The contact for the Regional Docket Office is E. Levy, U.S. EPA Region 5 (MRI–13J), 77 W. Jackson Blvd., Chicago, IL 60604.

SUPPLEMENTARY INFORMATION: The site to be deleted from the NPL is the Whiteford Sales & Service, Inc. (WSS) site located within the city limits of South Bend, St. Joseph County, IN, approximately 1 and ½ miles southwest of downtown. A Notice of Intent to Delete for the site was published on May 3, 1996 in the Federal Register (61 FR 19889). The closing date for public comments on the Notice of Intent to Delete was June 3, 1996. EPA received no comments and, therefore, no Responsiveness Summary was prepared.

EPA identifies sites that appear to present a significant risk to public health, welfare, or the environment, and maintains the NPL as the list of those sites. Sites on the NPL may be the subject of Hazardous Substance Response Trust Fund (Fund) financed remedial actions. As described in § 300.425(e)(3) of the NCP, sites deleted from the NPL remain eligible for additional Fund-financed remedial actions in the unlikely event that conditions at the site warrant such actions. Deletion of a site from the NPL does not affect responsible party liability or impede agency efforts to recover costs associated with response efforts.

List of Subjects in 40 CFR Part 300

Environmental potection, Air pollution control, chemicals, Hazardous substances, Hazardous waste, Intergovernmental relations, Penalties, Reporting and recordkeeping requirements, Superfund, Water pollution control, Water supply.

Dated: August 13, 1996.

David A. Ullrich,

Acting Regional Administrator.

40 CFR Part 300 is amended as follows:

PART 300—[AMENDED]

1. The authority citation for Part 300 continues to read as follows:

Authority: 33 U.S.C. 1321(c)(2); 42 U.S.C. 9601–9657; E.O. 12777, 56 FR 54757, 3 CFR, 1991 Comp.; p. 351; E.O. 12580, 52 FR 2923, 3 CFR, 1987 Comp.; p. 193.

Appendix B—[Amended]

2. Table 1 of Appendix B to Part 300 is amended by removing the site ''Whiteford Sales & Service/ Nationalease, South Bend, Indiana''.

[FR Doc. 96–22650 Filed 9–5–96; 8:45 am]

BILLING CODE 6560–50–P

DEPARTMENT OF TRANSPORTATION

Coast Guard

46 CFR Parts 10 and 12

[CGD 94–029]

RIN 2115–AE94

Modernization of Examination Methods

AGENCY: Coast Guard, DOT.

ACTION: Final rule.

SUMMARY: By this final rule, the Coast Guard amends the rules that require examinations for merchant-marine licenses and for unlicensed ratings to be written and to be administered by it: This rule removes references to writing and broadens the scope of those authorized to administer the examinations. These two changes reflect the efforts of the Coast Guard to develop testing by alternative media and, with that testing, the use of private-sector and public-sector testing services. The development of more effective and modern examination of applicants for merchant-marine licenses and unlicensed ratings will enhance the safety of the maritime environment.

DATES: This final rule is effective on October 7, 1996.

ADDRESSES: Unless otherwise indicated, documents referred to in this preamble are available for inspection or copying at the office of the Executive Secretary, Marine Safety Council (G–LRA–2, 3406), [CGD 94–029], U.S. Coast Guard Headquarters, 2100 Second Street SW., Washington, DC 20593–0001, between 9:30 a.m. and 2:00 p.m. Monday through Friday, except Federal holidays. The telephone number is (202) 267–1477.

FOR FURTHER INFORMATION CONTACT: Mr. Mark C. Gould, Project Manager, Marine Personnel Qualifications Branch (G–MOS–1), (202) 267–6890.

SUPPLEMENTARY INFORMATION:

Background and Purpose

Currently, Coast Guard rules require that applicants for merchant-marine licenses and unlicensed ratings pass written examinations administered by it. During the latter part of 1993, the Coast Guard conducted meetings and discussions of a focus group, which addressed the future of Coast Guard licensing. Specifically, the group looked at ways to improve and modernize merchant-mariner examinations.

The report of the focus group, ''Licensing 2000 and Beyond'' (November, 1993), a copy of which is available in the public docket for this rulemaking [CGD 94–029] where indicated under **ADDRESSES** above, recommends that the Coast Guard's Marine Licensing Program adopt new methods of verifying competency, including practical demonstrations and the use of simulators. Practical demonstrations and simulators would provide more effective means of testing the skills of the applicants by requiring proper actions and reactions during real-time, real-world scenarios. Electronic methods of examination are employed by private sector and public-sector organizations. There is increasing user of Third-Party or Fourth-Party testing systems that maximize the significant benefits new technology offers. The report of the focus group defined a ''Third Party'' as one who trains or teaches the mariner, and a ''Fourth Party'' as someone, other than the Coast Guard or a Third Party, who administers a test or makes a subjective judgment about the competency of the mariner. The Coast Guard is exploring the possibility or implementing electronic methods and the use of Third-Party or Fourth-Party testing services.

However, 46 CFR 10.205, 10.207, 10.901, 12.05–9, 12.10–5, 12.15–9, and 12.20–5 specify that applicants need pass written (or oral) examinations administered by the Coast Guard. Because the Coast Guard is considering the use of other, proved methods of proficiency testing, which could significantly improve a very critical aspect of the Coast Guard's qualification system, this final rule removes the terms ''written'' and ''in writing'' from the rules governing merchant-marine examinations and makes minor revisions to authorize testing other than by the Coast Guard.

Regulatory History

On February 23, 1995, acting on the delegated authority, among others, of Chapters 71 (for 46 CFR Part 10) and 73 (for 46 CFR Part 12) of Title 46 of the United States Code, the Coast Guard published in the Federal Register [60 FR 10053] a notice of proposed rulemaking (NPRM), entitled Modernization of Examination Methods. The Coast Guard received eight letters commenting on the proposal. It held no public hearing.

Discussion of Comments

The Coast Guard received eight comments from various companies and individuals. Most supported the rulemaking. One flatly opposed it, and several expressed concern about its impact on mariners, maritime employers, and marine educational institutions. These concerns are addressed below.

One commentor stated that the Coast Guard does not solicit the ideas and comments of small businesses or other small organizations to examine the impact of proposed rules. Another insisted that it would have an adverse economic impact on independently owned and operated small businesses. The Coast Guard disagrees. As required by the Administrative Procedure Act (5 U.S.C. 553) and the Regulatory Flexibility Act (5 U.S.C. 601 *et seq.*), the Coast Guard solicited comments from the public in the NPRM [60 FR 10053], and it considered all comments received during the comment period. In addition, it receives advice and recommendations from the Merchant Marine Personnel Advisory Committee (MERPAC) on a variety of matters pertaining to U.S. merchant mariners, including standards of training and qualification. The 19-member committee includes representatives from shipping companies both large and small, maritime academies, proprietary marine educators, and active mariners.

One commentor stated that this rulemaking is significant under section 3(f) of Executive Order 12866. The Coast Guard and OMB disagree. Because this final rule simply broadens the available methods of administering examinations, and because it changes the rules to allow the use of fourth-party testing in the future (beyond the existing authorization for third-party and Coast Guard testing), it should not harm any organization, large or small.

The specter of simulators disturbed several commentors, who adduced five main criticisms: (1) The Coast Guard is using this rulemaking to mandate the use of simulators as a stand-alone method to demonstrate proficiency. (2) Simulation will be used where a student's performance would be better ascertained by written examination. (3) Such radical changes in the examination process should be made slowly. (4) Simulators cannot adequately present the conditions encountered by towboats on rivers or inland waters. (5) There are insufficient simulators presently available for this program. These criticisms are mistaken.

(1) This rulemaking was undertaken to permit, rather than mandate, the use of simulators as an option to demonstrate proficiency. There is no intention to mandate the use of simulators as a sole means of demonstrating proficiency.

(2) Some subjects (meeting and passing, navigation involving traffic, and the like) are ideally suited to simulation because the evaluator can guage the timeliness and adequacy of the student's response. Others (tides and currents, employment of navigational equipment, and the like) are indeed better suited for a multiple-choice examination and use of reference materials. The use of simulators will be allowed only where it affords a clear advantage over written examinations.

(3) Because the Coast Guard is permitting, rather than mandating, the use of simulators and practical demonstration in addition to written examinations, changes can be introduced gradually. The Coast Guard

intends to retain written examinations for the foreseeable future.

(4) There is, in fact, one third-party training course approved by the Coast Guard for towboats that uses simulators for part of its curriculum, and uses them to good effect. This is simply another option available to the license candidate.

(5) Because the use of simulators as one part of testing is merely one option available to the license candidate, the number of courses approved by the Coast Guard and now available to the public that use simulators is irrelevant.

A related matter, the 1995 Amendments to the International Convention on Standards of Training, Certification and Watchkeeping for Seafarers, 1978 (STCW), will affect virtually all phases of the system used in the United States to train, test, evaluate, license, certify and document merchant mariners for service on seagoing vessels. The Amendments will require both written examinations and practical demonstrations of skills and will promote the use of simulators. They are the subject of a separate rulemaking [CGD 95–062], an NPRM which appears at 61 FR 13284 (March 26, 1996).

One commentor opposed the Coast Guard's accepting successful completion of a course, approved by the Coast Guard and offered by a third-party company, that combines the use of simulators and written examinations, instead of an examination administered by the Coast Guard. The commentor felt that the written examination would be compromised. The Coast Guard disagrees. It will conduct independent visits and audits, under the authority of 46 CFR 10.303(f), to ensure that the conditions for Coast Guard approval are maintained. It may also administer partial examinations to applicants who have already successfully completed these courses so it can monitor whether training facilities are meeting their training objectives. Under the current rules (46 CFR 10.301) applicants who successfully complete certain approved courses offered by third-party trainers throughout the country, including administration of final examinations, are exempt from the requirement to pass examinations administered by the Coast Guard. There is no reason to amend or limit application of these rules, as long as adequate oversight is maintained.

One commentor stated that the Coast Guard should expand the role of the third-party training companies so that completion of their approved courses would satisfy major portions of licensing and documentation examinations. The Coast Guard agrees. Experience gained in recent years has convinced the Coast Guard that, under the right conditions and guidelines, a Coast Guard examination is unnecessary, if the candidate is subject to a rigorous program of evaluation by competent assessors.

Five commentors expressed support for the concept of fourth-party testing, but felt that Coast Guard testing should remain in place as a check against cost increases in private-sector testing. The Coast Guard agrees that this is a valid concern. The Coast Guard is maintaining its testing system.

One commentor stated that no third-party or fourth-party testing should be allowed unless proctored by professional mariners. In addition, the commentor cautioned the Coast Guard about third-party and fourth-party training or testing organizations' selling their services. The Coast Guard does not believe that these concerns warrant changes to the NPRM. There are currently more than 100 third-party training organizations that offer courses approved by the Coast Guard and that teach and examine applicants for licenses or merchant mariners' documents. In most instances, the applicants then must pass examinations administered by the Coast Guard. The operations of these organizations are overseen on a regular basis by Coast Guard personnel of local Regional Examination Centers (RECs). At least some of the personnel in each REC have military sea time, and several are former professional merchant mariners. Coast Guard personnel of Marine Safety Offices, reservists, and auxiliarists with river or seagoing experience may oversee these operations as well. For fourth-party testing, professional expertise in maritime matters is not relevant. Fourth-party testing organizations merely proctor and grade multiple-choice examinations for their employers. Any fourth-party testing organization involved in direct assessment of candidates will be subject to Coast Guard approval, including confirmation of the professional credentials of the staff involved in assessment.

One commentor had several questions concerning fourth-party testing. Although the Coast Guard is not implementing such testing in the immediate future, changes made by this final rule do enable the Coast Guard to implement the use or partial use of such testing in the future. Fourth-party testing may serve as a second alternative to traditional examinations administered by the Coast Guard, the first being third-party training with testing. The Coast Guard could, for example, submit a data bank of questions to the fourth-party examiner, who would randomly generate examinations. The only contact that fourth-party testers would then have with the course or student would be to administer and grade the examinations. Other approaches to fourth-party testing may emerge from increased use of simulators.

One commentor asked whether Coast Guard would dictate objectives of learning and methods of determining competency to the training companies, and whether it would dictate the curriculum. It currently has course-approval guidelines for most courses required by its rules. These guidelines, authorized by 46 CFR 10.302, describe the desired learning objectives but not the methods of determining competency. Although the Coast Guard does not dictate the curriculum, it will not approve it unless the information contained in the guidelines is imparted to the student. Although it does not anticipate imposing rigid requirements for the assessment of competency, it will take into account methods and criteria of assessment in its approval of courses permitted by this final rule.

One commentor expressed concern about organizations and courses which exist solely to assist the applicant in memorizing the answers to the questions in the bank of Coast Guard examinations and actually teach the applicant nothing. The use of simulators and practical demonstration of proficiency in certain topics will tend to eliminate this questionable method of examination preparation.

A maritime educational institution suggested that the Coast Guard issue each original license and each raise in grade or increase in scope as a nonrenewable temporary document, which would expire in five years unless replaced by a permanent license based on compliance with STCW. In contrast, a maritime educator suggested that each eligible student, upon graduation from a Federal or State maritime academy, automatically receive a license as a third mate or third assistant engineer. Whatever their merits, both comments lie well beyond the scope of this final rule, which merely removes the requirement that licensing examinations be written and allows other entities to administer them.

One commentor stated that this final rule should require the functional use of the English language. The Coast Guard agrees. Title 46 CFR 10.201(c) requires that ''an applicant for a license must demonstrate an ability to speak and understand English as found in the navigation rules, aids to navigation publications, emergency equipment

instructions, machinery instructions, and radiotelephone communications instructions.'' That rule remains unchanged by this. Likewise, the current rules regarding examinations for able seamen [46 CFR 12.05–9(b)], lifeboatmen [46 CFR 12.10–5(b)], and qualified members of the engine department [46 CFR 12.15–9(a)] all require that the examinations be conducted in the English language. These rules continue to be necessary to ensure that personnel in these critical positions will sufficiently understand orders that may come down under the stress of an emergency. The ability to understand such orders can make the critical difference in life-threatening situations. Therefore, these rules, too, remain unchanged by this.

In sum: The NPRM proposed to remove the terms ''written'' and ''in writing'' from the rules governing examinations administered by the Coast Guard for merchant mariners seeking licenses and raises of grade [46 CFR 10.205(i)(1), 10.207(d)(1), 10.217(a) (1) and (2), and 10.901(a)], and for applicants seeking to fill unlicensed ratings [46 CFR 12.05–9 (a) and (b), 12.10–5 (a) and (b), 12.15–9 (a) and (c), and 12.20–5]. (The last of these, 46 CFR 12.20–5, along with the rest of the subpart, 12.20, to which it belonged, was removed by a supervening Interim Rule on Tankermen [60 FR 17134 (April 4, 1995)].) The NPRM also proposed to let the Coast Guard Officer in Charge, Marine Inspection (OCMI), authorize the examination of applicants by private-sector and public-sector testing services. These two changes reflect the Coast Guard's efforts to develop more modern, efficient, and effective methods of examination.

Regulatory Evaluation

This final rule is not a significant regulatory action under section 3(f) of Executive Order 12866 and does not require an assessment of potential costs and benefits under section 6(a)(3) of that Order. It has not been reviewed by the Office of Management and Budget under that Order. It is not significant under the regulatory policies and procedures of the Department of Transportation (DOT) [44 FR 11040 (February 26, 1979)]. The Coast Guard expects the economic impact from this rule to be so minimal that a full Regulatory Evaluation under paragraph 10e of the regulatory policies and procedures of DOT is unnecessary. This rule will impose no costs on industry.

Small Entities

Under the Regulatory Flexibility Act (5 U.S.C. 601 *et seq.*), the Coast Guard must consider the economic impact on small entities of a rule for which an NPRM is required. ''Small entities'' may include (1) Small businesses and not-for-profit organizations that are independently owned and operated and are not dominant in their fields and (2) governmental jurisdictions with populations of less than 50,000. As the Discussion of Comments makes clear, this final rule will place no additional costs on the public. Therefore, the Coast Guard certifies under section 605(b) of the Regulatory Flexibility Act (5 U.S.C. 601 *et seq.*) that this rule will not have a significant economic impact on a substantial number of small entities.

Collection of Information

This final rule contains no collection-of-information requirements under the Paper Reduction Act (44 U.S.C. 3501 *et seq.*).

Federalism

The Coast Guard has analyzed this final rule under the principles and criteria contained in Executive Order 12612 and has determined that it does not have sufficient implications for federalism to warrant the preparation of a Federalism Assessment. The authority to develop and administer examinations for merchant mariners' licenses and other documents has been committed to the Coast Guard by Federal statutes. If State or local governments ever did purport to regulate these examinations, the Coast Guard would move to pre-empt their acts for the sake of uniformity under the Commerce Clause of the Constitution; but the issue promises to remain hypothetical.

Environment

The Coast Guard considered the environmental impact of this final rule and concluded that, under paragraph 2.B.2.e(34)(c) of Commandant Instruction M16475.1B, this rule is categorically excluded from further environmental documentation. The rule clearly has no environmental impact. A ''Categorical Exclusion Determination'' is available in the docket for inspection or copying where indicated under **ADDRESSES.**

List of Subjects

46 CFR Part 10

Reporting and recordkeeping requirements, schools, seamen.

46 CFR Part 12

Reporting and recordkeeping requirements, seamen.

For the reasons set out in the preamble, the Coast Guard amends 46 CFR parts 10 and 12 as follows:

PART 10—LICENSING OF MARITIME PERSONNEL

1. The authority citation for part 10 is revised to read as follows:

Authority: 31 U.S.C. 9701, 46 U.S.C. 2103, 2110; 46 U.S.C. Chapter 71; 49 CFR 1.45, 1.46; § 10.107 also issued under the authority of 44 U.S.C. 3507.

2. In § 10.205, paragraph (i)(1) is revised to read as follows:

§ 10.205 Requirements for original licenses and certificates of registry.

* * * * *

(i) *Professional Examination.* (1) When the OCMI finds the applicant's experience and training to be satisfactory and the applicant is eligible in all other respects, the OCMI will authorize the examination in accordance with the following requirements:

(i) Any applicant for a deck or engineer license limited to vessels not exceeding 500 gross tons, or a license limited to uninspected fishing-industry vessels, may request an oral-assisted examination in lieu of any written or other textual examination. If there are textual questions that the applicant has difficulty reading and understanding, the OCMI will offer the oral-assisted examination. Each license based on an oral-assisted examination is limited to the specific route and type of vessel upon which the applicant obtained the majority of service.

(ii) The general instructions for administration of examinations and the lists of subjects for all licenses appear in Subpart I of this part. The OCMI will place in the applicant's file a record indicating the subjects covered.

* * * * *

3. In § 10.207, paragraph (d)(1) is revised to read as follows:

§ 10.207 Requirements for raise of grade of license.

* * * * *

(d) *Professional Examination.* (1)(i) When the OCMI finds an applicant's experience and training for raise of grade to be satisfactory and the applicant is eligible in all other respects, the OCMI will authorize the examination. Oral-assisted examinations may be administered in accordance with § 10.205(i)(1). The OCMI will place in the applicant's file a record indicating the subjects covered.

(ii) The general instructions for administration of examinations and the lists of subjects for all licenses appear in Subpart I of this part.

* * * * *

4. In § 10.217, the second sentences of paragraphs (a) (1) and (2) are revised to read as follows:

§ 10.217 Examination procedures and denial of licenses.

(a)(1) * * * The examination fee set out in § 10.109 must be paid before the applicant may take the first examination section. * * *

* * * * *

(2) * * * The examination fee set out in § 10.109 must be paid before the applicant may take the first examination section. * * *

* * * * *

5. In § 10.901, paragraph (a) is revised to read as follows:

§ 10.901 General provisions.

(a) Each applicant for any license listed in this part shall pass examinations on the appropriate subjects listed in this subpart, except as noted in § 10.903(b).

* * * * *

PART 12—CERTIFICATION OF SEAMEN

6. The authority citation for part 12 continues to read as follows:

Authority: 31 U.S.C. 9701; 46 U.S.C. 2103, 2110, 7301, 7701; 49 CFR 1.46.

7. In § 12.05–9, paragraph (a) and the introductory text of paragraph (b) are revised to read as follows:

§ 12.05–9 Examination and demonstration of ability.

(a) Before an applicant is certified as an able seaman, he or she shall prove to the satisfaction of the Coast Guard by oral or other means of examination, and by actual demonstration, his or her knowledge of seamanship and the ability to carry out effectively all the duties that may be required of an able seaman, including those of a lifeboatman. The applicant shall demonstrate that he or she:

(1) Has been trained in all the operations connected with the launching of lifeboats and liferafts, and in the use of oars;

(2) Is acquainted with the practical handling of boats; and

(3) Is capable of taking command of the boat's crew.

(b) The examination, whether administered orally or by other means, must be conducted only in the English language and must consist of questions regarding:

* * * * *

8. In § 12.10–5, paragraph (a) and the introductory text of paragraph (b) are revised to read as follows:

§ 12.10–5 Examination and demonstration of ability.

(a) Before an applicant is certified as a lifeboatman, he or she shall prove to the satisfaction of the Coast Guard by oral or other means of examination, and by actual demonstration, his or her knowledge of seamanship and the ability to carry out effectively all the duties that may be required of a lifeboatman. The applicant shall demonstrate that he or she:

(1) Has been trained in all the operations connected with the launching of lifeboats and liferafts, and in the use of oars;

(2) Is acquainted with the practical handling of boats; and

(3) Is capable of taking command of the boat's crew.

(b) The examination, whether administered orally or by other means, must be conducted only in the English language and must consist of questions regarding:

* * * * *

9. In § 12.15–9, the first sentence of paragraph (a), and paragraph (c), are revised to read as follows:

§ 12.15–9 Examination requirements.

(a) Each applicant for certification as a qualified member of the engine department in the rating of oiler, watertender, fireman, deck engineer, refrigeration engineer, junior engineer, electrician, or machinist shall be examined orally or by other means and only in the English language on the subjects listed in paragraph (b) of this section. * * *

* * * * *

(c) Each applicant for certification as a qualified member of the engine department in the rating of pumpman shall, by oral or other examination, demonstrate sufficient knowledge of the subjects peculiar to that rating to satisfy the Officer in Charge, Marine Inspection, that he or she is qualified to perform the duties of that rating.

* * * * *

Dated: August 15, 1996.

J.C. Card,

Rear Admiral, U.S. Coast Guard, Chief, Marine Safety and Environmental Protection.

[FR Doc. 96–22746 Filed 9–5–96; 8:45 am]

BILLING CODE 4910–14–M

ENVIRONMENTAL PROTECTION AGENCY

[FRL–5602–4]

48 CFR Parts 1506, 1534, 1536, 1542, 1545, and 1552

Acquisition Regulation

AGENCY: Environmental Protection Agency.

ACTION: Final rule.

SUMMARY: The Environmental Protection Agency (EPA) is removing from the EPA Acquisition Regulation (EPAAR) (48 CFR Chapter 15) its coverage for conduct of surveys; implementing OMB Circular A–109, Major Systems Acquisitions; special aspects of sealed bidding in construction contracting; additive or deductive items; indirect cost rates; and management of Government property in the possession of contractors.

EFFECTIVE DATE: September 6, 1996.

FOR FURTHER INFORMATION CONTACT: Louise Senzel, Environmental Protection Agency, Office of Acquisition Management (3802F), 401 M Street, SW, Washington, D.C. 20460. Telephone: (202) 260–6204.

SUPPLEMENTARY INFORMATION:

A. Background

This final rule eliminates from the EPAAR coverage on conduct of market surveys, implementation of OMB Circular A–109 on Major Systems Acquisitions, special aspects of sealed bidding in construction contracting, additive or deductive items, indirect cost rates, and management of Government property in the possession of contractors. The coverage is obsolete, for which new FAR coverage is available; the coverage is duplicative of OMB Circular A–109; or the coverage includes procedures internal to EPA, unnecessary for inclusion in the EPAAR. Codification of the Agency's internal procedures is unnecessary, since they have no significant cost or administrative impact on contractors or offerors. Consequently, EPA will retain any implementing guidance and internal procedures in an internal directive, where necessary.

B. Executive Order 12866

The final rule is not a significant regulatory action for the purposes of Executive Order 12866; therefore, no review is required by the Office of Information and Regulatory Affairs.

C. Paperwork Reduction Act

The Paperwork Reduction Act does not apply because this final rule does not contain information collection requirements that require the approval of OMB under the Paperwork Reduction Act of 1980 (44 U.S.C. 3501 et seq.)

D. Regulatory Flexibility Act

The EPA certifies that this final rule does not exert a significant economic impact on a substantial number of small entities. The requirements to contractors under the final rule impose no reporting, record-keeping, or any compliance costs.

E. Unfunded Mandates

This final rule will not impose unfunded mandates on state or local entities, or others.

List of Subjects in 48 CFR Parts 1506, 1534, 1536, 1542, 1545, and 1552

Government procurement.

Authority: The provisions of this regulation are issued under 5 U.S.C. 301; Sec. 205(c),63 Stat. 390, as amended, 40 U.S.C. 486(c).

Therefore, 48 CFR Chapter 15 is amended as set forth below:

1. The authority for Parts 1506, 1536, 1542, 1545, and 1552, continue to read as follows:

Authority: Sec. 205(c), 63 stat. 390, as amended, 40 U.S.C. 486(c).

Subpart 1506.371—[Removed]

2. Subpart 1506.371 is removed in its entirety.

PART 1534—[REMOVED]

3. Part 1534 is Removed in its entirety.

Subpart 1536.3—[Removed]

4. Subpart 1536.3 (§§ 1536.303 and 1536.303–70) is removed in its entirety.

1536.570 [Removed]

5. Section 1536.570 is removed in its entirety.

1542.705–1 [Removed]

6. Section 1542.705–1 is removed in its entirety.

Subpart 1545.5–[Removed]

7. Subpart 1545.5 (§ 1545.502) is removed in its entirety.

1552.236–71 [Removed]

8. Section 1552.236–71 is removed in its entirety.

Dated: August 19, 1996.

Betty L. Bailey,

Director, Office of Acquisition Management.

[FR Doc. 96–22654 Filed 9–5–96; 8:45 am]

BILLING CODE 6560–50–P

---

48 CFR Parts 1515 and 1552

[FRL–5602–5]

Acquisition Regulation; Coverage of Source Selection Process

AGENCY: Environmental Protection Agency.

ACTION: Final rule.

SUMMARY: This document amends the Environmental Protection Agency (EPA) acquisition regulation (48 CFR Chapter 15) coverage on the source selection process. EPA is aware that Part 15 of the Federal Acquisition Regulation is currently undergoing revision. The Agency believes that its changes will not conflict with any subsequent revisions to Part 15. Additionally, the Agency believes that the changes to its acquisition regulation are needed now as an interim measure to streamline the process and empower Contracting Officers at EPA. This rule is also necessary to implement portions of the Federal Acquisition Streamlining Act of 1994.

EFFECTIVE DATE: September 23, 1996.

FOR FURTHER INFORMATION CONTACT: Louise Senzel, Environmental Protection Agency, Office of Acquisition Management (3802F), 401 M Street, SW, Washington, D.C. 20460. Telephone: (202) 260–6204.

SUPPLEMENTARY INFORMATION:

A. Background

The proposed rule was published in the Federal Register (61 CFR 25440) on May 21, 1996, providing for a comment period until July 22, 1996.

Interested persons have been afforded an opportunity to participate in the making of this rule. No public comments were received.

B. Executive Order 12866

This is not a significant regulatory action for the purposes of Executive Order 12866; therefore, no review was required by the Office of Information and Regulatory Affairs.

C. Paperwork Reduction Act

The Paperwork Reduction Act did not apply because this rule does not contain information collection requirements that require the approval of OMB under the Paperwork Reduction Act of 1980 (44 U.S.C. 3501 et seq.).

D. Regulatory Flexibility Act

The EPA certifies that this rule does not exert a significant economic impact on a substantial number of small entities. The requirements to contractors under the proposed rule impose no reporting, record-keeping, or any compliance costs.

E. Unfunded Mandates

This rule will not impose unfunded mandates on state or local entities, or others.

F. Regulated Entities

EPA contractors are entities potentially affected by this action. Specifically, those entities competing under solicitations for negotiated procurements will be affected.

Category	Regulated entity
Industry	EPA contractors.

List of Subjects in 48 CFR Part 1515 and 1552

Government procurement.

Authority: The provisions of this regulation are issued under 5 U.S.C. 301; Sec. 205(c), 63 Stat. 390, as amended, 40 U.S.C. 486(c).

Therefore, 48 CFR Chapter 15 is amended as set forth below: 1. The authority citations for parts 1515 and 1552 continue to read as follows:

Authority: Sec. 205(c), 63 Stat. 390, as amended, 40 U.S.C. 486(c).

1515.407 [Amended]

2. Section 1515.407 is amended by removing paragraph (a)(1), and by redesignating paragraphs (a)(2) and (3) as (a)(1) and (2).

3. Section 1515.604 is amended by revising paragraphs (a), (c), and (d) to read as follows:

1515.604 Responsibilities and Duties.

* * * * *

(a) *Source Selection Official.* The Source Selection Official (SSO) is the official responsible for overall management of the source selection process. Duties of the SSO include, but are not limited to, appointing members and chairpersons of the Source Evaluation Board, the Technical Evaluation Panel (TEP), and the Business Evaluation Panel (BEP); and approving solicitation related documents. However, the Contracting Officer is responsible for approving amendments to solicitation documents. The SSO may waive in writing the requirement in 1515.612(a)(1)(v) for at least one member of the TEP to be an individual not involved in managing the

current contract. The SSO also approves the competitive range determination and makes the source selection decision.

* * * * *

(c) *Technical Evaluation Panel (TEP).* The Program Office has the responsibility for developing the technical evaluation criteria and statement of work for the solicitation. The TEP has the responsibility for evaluating the technical aspects of the offerors' technical proposals. Based on the recommendation of the Program Office, the SSO has the discretion of assigning this evaluation responsibility to the Project Officer, if appropriate, or to the TEP. When offerors' past performance is evaluated as part of the technical proposal evaluation process, the past performance evaluation shall be conducted by the TEP, or by the Contracting Officer and the Project Officer. Based on input from the Project Officer, the Contracting Officer has the discretion of assigning this responsibility to the TEP or to the Contracting Officer and Project Officer.

(d) *Business Evaluation Panel (BEP).* (1) Outside of the technical review, the Contracts Office has the lead for reviewing solicitation evaluation criteria and the Statement of Work from a business perspective; evaluating the business, pricing, and contractual aspects of the offerors' business and technical proposals; and examining other factors such as the responsibility of the offerors. Based on the recommendation of the Contracting Officer, the SSO has the discretion to designate these responsibilities to the Contracting Officer or designating a BEP. Sections 1515.612(a)(1) (vi) and (vii) are applicable only when the SSO has designated a BEP.

(2) When no BEP is convened, the Contracting Officer shall perform a preliminary cost evaluation of each offeror's cost/price proposal to identify any cost elements that appear unreasonable or questionable. When cost analysis is employed, the Contracting Officer shall perform a detailed cost analysis of the business proposal which includes an evaluation of the offeror's subcontracting program, management structure, and any other relevant factors which may prevent award to an offeror. This analysis may be included in a separate report, in the competitive range determination, or in the pre/post-negotiation memorandum.

4. Section 1515.604–70 is amended by adding paragraph (c) to read as follows:

1515.604–70 Personal conflicts of interest.

* * * * *

(c) Each EPA employee (including special employees (as defined by 1503.600–71 (b)) involved in source evaluation and selection is required to comply with the Office of Government Ethics ethics provisions at 5 CFR Part 2635.

5. Section 1515.605 is amended by revising paragraphs (a), (b), and adding (c) to read as follows:

1515.605 Evaluation Factors.

* * * * *

(a) The Contracting Officer shall insert the provisions at 1552.215–70, ''EPA Source Evaluation and Selection Procedures—Negotiated Procurement'' and either: the provision in 1552.215–71, ''Evaluation Factors for Award,'' where all evaluation factors other than cost or price when combined are significantly more important than cost or price; or the provision in Alternate I to 1552.215–71, where all evaluation factors other than cost or price when combined are significantly less important than cost or price; or the provision in Alternate II to 1552.215–71, where award will be made to the offeror with the lowest-evaluated cost or price whose technical proposal meets the minimum needs of the Government; or the provision in Alternate III where all evaluation factors other than cost or price when combined are approximately equal to cost or price. The Contracting Officer may use provisions substantially the same as 1552.215–71, Alternate I to 1552.215–71, Alternate II to 1552.215–71, or Alternate III to 1552.215–71 without requesting a deviation to the EPAAR.

(b) Technical evaluation criteria should be prepared in accordance with FAR 15.605 and inserted into paragraph (b) of the provision at 1552.215–71, Alternate I, and Alternate III. If technical evaluation criteria are used in Alternate II, the criteria should be prepared in accordance with FAR 15.605 and inserted into paragraph (b). When past performance is to be used as an evaluation factor, the Contracting Officer must develop criteria for evaluating past performance and include such criteria in section M of the solicitation.

(c) *Evaluation Methodologies.* Evaluation criteria may be developed using methodologies other than numerical scoring, e.g., adjectival ratings or color scoring. The relative importance of the evaluation criteria must be clearly identified in the solicitation. The Contracting Officer should identify and prepare evaluation criteria consistent with FAR 15.605.

* * * * *

6. Section 1515.608 is amended by revising paragraphs (a)(1); adding paragraph (a)(3); by revising paragraphs (b)(1)(ii) and (b)(2)(i); by adding paragraph (b)(3); by removing paragraph (c) and by redesignating paragraphs (d) and (e) as (c) and (d), to read as follows:

1515.608 Proposal evaluation.

(a) * * *

(1) Technical proposals shall be evaluated *solely* on the factors specified in the solicitation and in accordance with FAR 15.608. Additionally, the evaluation of technical proposals (including past performance factors) shall be accomplished using the scoring plan shown below or one specifically developed for the solicitation. Contracting Officers may request that the TEP also indicate whether proposals are acceptable or unacceptable, and/or whether the offerors' response to individual criteria are acceptable or unacceptable.

SCORING PLAN

Value	Descriptive statement
0	The factor is not addressed, or is totally deficient and without merit.
1	The factor is addressed, but contains deficiencies and/or weaknesses that can be corrected only by major or significant changes to relevant portions of the proposal, or the factor is addressed so minimally or vaguely that there are widespread information gaps. In addition, because of the deficiencies, weaknesses, and/or information gaps, serious concerns exist on the part of the TEP about the offeror's ability to perform the required work.
2	Information related to the factor is incomplete, unclear, or indicates an inadequate approach to, or understanding of the factor. The TEP believes there is question as to whether the offeror would be able to perform satisfactorily.
3	The response to the factor is adequate. Overall, it meets the specifications and requirements, such that the TEP believes that the offeror could perform to meet the Government's minimum requirements.
4	The response to the factor is good with some superior features. Information provided is generally clear, and the approach is acceptable with the possibility of more than adequate performance.
5	The response to the factor is superior in most features.

* * * * *

(3) The goal of the technical evaluation is to understand each offeror's proposal and to assess each

proposal relative to the specified evaluation factors. The TEP report(s) should address any perceived strengths, as well as any perceived weaknesses or deficiencies, and risks associated with the offerors' performance. Scores may or may not change from the initial evaluation to the supplemental evaluation, depending on the offerors' response to interrogatories. The supplemental TEP report must explain the rationale for no change in score, as well as any decrease or increase in score as a result of the offerors' response to interrogatories.

(b) * * *

(1) * * *

(ii) Any interrogatories the Contracting Officer should submit to offerors to clarify their technical proposals to address any weaknesses, deficiencies, or questions associated with their technical proposals. The Contracting Officer may review the technical proposals and TEP evaluation, and submit any additional interrogatories deemed appropriate.

(2)(i) A statement that the respective technical evaluation panel members are free from actual or potential personal conflicts of interest, and are in compliance with the Office of Government Ethics ethics provisions at 5 CFR Part 2635.

* * * * *

(3) The Contracting Officer may release the cost/price proposals to the entire TEP or solely to the TEP Chairperson, after the TEP has completed its evaluation of initial proposals. The TEP or Chairperson should evaluate cost/price proposals to determine whether the offerors' cost/price proposals adequately reflect their technical proposals and the requirements of the solicitation, and demonstrate that the proposed price or cost provides an adequate understanding of the requirements of the solicitation. Any inconsistencies between the proposals and the solicitation requirements should be identified. Any inconsistencies between the cost and technical proposals should also be identified.

7. Section 1515.609 is amended by revising paragraph (c) to read as follows:

1515.609 Competitive Range.

* * * * *

(c)(1) When a single proposal is the only proposal in the competitive range, as part of the required discussion in the competitive range determination, Contracting Officers shall address at a minimum the following factors: Whether the requirement could have been broken up into smaller components; whether the solicitation provided adequate response time; whether the requirement could have been satisfied with reduced staffing levels (discussion may be combined with the first factor); and if applicable, whether the work required on-site could otherwise be performed at a contractor's facility, avoiding the cost and logistical implications of relocating employees.

(2) In cases where only a single proposal has been received and a competitive range determination has not been prepared, the discussion of the reasons for receipt of the single proposal which otherwise would be contained in the competitive range determination shall be included in the source selection document. The discussion in the source selection document at a minimum shall address the factors referenced in paragraph (c)(1) of this section.

(3) The Contracting Officer shall provide a copy of the competitive range determination or source selection document to the Competition Advocate after approval of the determination or document by the designated Source Selection Official.

8. Section 1515.611 is revised to read as follows:

1515.611 Best and final offers.

The Contracting Officer shall establish a common cut-off date for receipt of revised proposals and/or confirmations of negotiations (best and final offers) upon completion of negotiations.

9. Section 1515.612 is amended by revising paragraphs (a)(1)(iii), (iv) and (v); and by adding paragraph (c) to read as follows:

1515.612 Formal source selection.

(a) * * *

(1) * * *

(iii) SEB Membership—The SSO will determine the organizational levels of the individuals to serve on the SEB.

(iv) TEP Chairperson—The SSO will determine, based on the recommendation of the requesting program office, the Chairperson of the TEP. For recompetes or follow-on contracts, the Chairperson should normally not be the incumbent contract's Project Officer.

(v) TEP Membership—At least two members, in addition to the Project Officer, who are knowledgeable of the procurement's technical aspects. If the procurement is a follow-on to an existing contract, at least one of the TEP members should be someone who is not involved in managing the current contract, preferably from outside of the program division which originated the requirement. See 1515.604(a) for waiver of this requirement.

* * * * *

(c) *Source Selection Plan.* No separate source selection plan is required. The Contracting Officer may include the information required by FAR 15.612(c) in the individual acquisition plan.

10. Section 1552.215–70 is revised to read as follows:

1552.215–70 EPA Source Selection and Selection Procedures—Negotiated Procurements (SEP 1996)

As prescribed in 1515.605, insert the following provision.

EPA SOURCE SELECTION AND SELECTION PROCEDURES—NEGOTIATED PROCUREMENTS (SEP 1996)

(a) The Government will perform source selection in accordance with FAR Part 15 and the EPA Source Evaluation and Selection Procedures in EPAAR Part 1515 (48 CFR Part 1515). The significant features of this procedure are:

(1) The Government will perform either cost analysis or price analysis of the offeror's cost/business proposal in accordance with FAR Parts 15 and 31, as appropriate. In addition, the Government will also evaluate proposals to determine contract cost or price realism.

Cost or price realism relates to an offeror's demonstrating that the proposed cost or price provides an adequate reflection of the offeror's understanding of the requirements of this solicitation, i.e., that the cost or price is not unrealistically low or unreasonably high.

(2) The Government will evaluate technical proposals as specified in 1552.215–71, Evaluation Factors for Award.

(b) In addition to evaluation of the previously discussed elements, the Government will consider in any award decision the responsibility factors set forth in FAR Part 9.

(End of Provision)

11. Section 1552.215–71 is revised as follows:

1552.215–71 Evaluation Factors for Award.

As prescribed in 1515.605, insert one of the following provisions.

EVALUATION FACTORS FOR AWARD (SEP 1996)

(a) The Government will make award to the responsible offeror(s) whose offer conforms to the solicitation and is most advantageous to the Government, cost or price and other factors considered. For this solicitation, all evaluation factors other than cost or price when combined are significantly more important than cost or price.

(b) Technical Evaluation Criteria:

_____

_____

(End of Provision)

EVALUATION FACTORS FOR AWARD (SEP 1996)

ALTERNATE I (SEP 96)

(a) The Government will make award to the responsible offeror(s) whose offer conforms

to the solicitation and is most advantageous to the Government, cost or price, and other factors considered. For this solicitation, all evaluation factors other than cost or price when combined are significantly less important than cost or price.

(b) Technical Evaluation Criteria:

(End of Provision)

EVALUATION FACTORS FOR AWARD—PROPOSAL MEETS THE MINIMUM NEEDS OF THE GOVERNMENT WITH THE LOWEST EVALUATED COST/PRICE

ALTERNATE II (SEP 1996)

(a) The Government will make award to the lowest-evaluated cost or price, technically acceptable, responsible offeror whose offer meets the minimum needs of the Government. In the event that there are two or more technically acceptable, equal price (cost) offers, the Government will consider other factors, as listed below in descending order of importance:

(b) Technical Evaluation Criteria:

(End of Provision)

EVALUATION FACTORS FOR AWARD (SEP 1996)

ALTERNATE III (SEP 96)

(a) The Government will make award to the responsible offeror(s) whose offer conforms to the solicitation and is most advantageous to the Government, cost or price, and other factors considered. For this solicitation, all evaluation factors other than cost or price when combined are approximately equal to cost or price.

(b) Technical Evaluation Criteria:

(End of Provision)

§ 1552.215–72 [Removed]

12. Section 1552.215–72 is removed.

Dated: August 21, 1996.

John C. Gherardini III,

Acting Director, Office of Acquisition Management.

[FR Doc. 96–22642 Filed 9–5–96; 8:45 am]

BILLING CODE 6560–50–P

NATIONAL AERONAUTICS AND SPACE ADMINISTRATION

48 CFR Parts 1807, 1808, 1809, 1810, 1811, 1812, 1814, 1828, 1835, 1842, 1852, 1871

Rewrite of the NASA FAR Supplement (NFS)

AGENCY: Office of Procurement, National Aeronautics and Space Administration (NASA).

ACTION: Final rule.

SUMMARY: Parts 1807 through 1814 (except 1813), and clauses affected by these parts, are revised in their entirety. Part 1810 is removed in its entirety; a new Part 1811 is added; and Parts 1828, 1835, 1842, and 1871 are revised as a result of the rewritten parts. The numbering of NFS sections has been changed to indicate the exact section of the FAR being implemented or supplemented.

EFFECTIVE DATE: September 6, 1996.

FOR FURTHER INFORMATION CONTACT: Mr. Thomas O'Toole, (202) 358–0478; Mr. Bruce King, (202) 358–0461.

SUPPLEMENTARY INFORMATION:

Background

The National Performance Review urged agencies to streamline and clarify their regulations. The NFS rewrite initiative was established to pursue these goals by conducting a section by section review of the NFS to verify its accuracy, relevancy, and validity.

Impact

NASA certifies that this regulation will not have a significant economic impact on a substantial number of small entities under the Regulatory Flexibility Act (5 U.S.C. 601 *et seq.*). This rule does not impose any reporting or record keeping requirements subject to the Paperwork Reduction Act.

List of Subjects in 48 CFR Parts 1807, 1808, 1809, 1810, 1811, 1812, 1814, 1828, 1835, 1842, 1852, and 1871

Government procurement.

Tom Luedtke,

Deputy Associate Administrator for Procurement.

Accordingly, 48 CFR Parts 1807, 1808, 1809, 1810, 1811, 1812, 1814, 1828, 1835, 1842, 1852, and 1871 are amended as follows:

2. Part 1807 is revised to read as follows:

PART 1807—ACQUISITION PLANNING

Subpart 1807.1—Acquisition Plans

Sec.
1807.103 Agency-head responsibilities.
1807.105 Contents of written acquisition plans.
1807.170 Acquisition Strategy Meeting (ASM)

Subpart 1807.2—Planning for the Purchase of Supplies in Economic Quantities

1807.204 Responsibilities of contracting officers.

Subpart 1807.3—Contractor Versus Government Performance

1807.307 Appeals.

Subpart 1807.5—Inherently Governmental Functions

1807.503 Policy.

Subpart 1807.70—Reserved

Subpart 1807.71—Master Buy Plan

1807.7100 General.
1807.7101 Applicability.
1807.7102 Submission, selection, and notification procedures.
1807.7102–1 Submission of Master Buy Plan.
1807.7102–2 Submission of amendments to the Master Buy Plan.
1807.7102–3 Selection and notification procedures.
1807.7103 Format of Master Buy Plan.

Subpart 1807.72—Acquisition Forecasting

1807.7200 Scope of subpart.
1807.7201 Definitions.
1807.7202 Policy.
1807.7203 Responsibilities.
1807.7204 Forecast data.
1807.7205 Public availability.

Authority: 42 U.S.C. 2473(c)(1)

PART 1807—ACQUISITION PLANNING

Subpart 1807.1—Acquisition Plans

1807.103 Agency-head responsibilities.

(NASA supplements paragraphs (d) and (e))

(d)(i) Except as provided in paragraph (d)(iii) of this section, acquisition plans shall be prepared according to the following:

(A) For acquisitions requiring Headquarters approval, by an Acquisition Strategy Meeting (ASM) (see 1807.170);

(B) For acquisitions not requiring Headquarters approval and expected to exceed $5 million, by installation-approved ASMs or written acquisition plans; and,

(C) For acquisitions not expected to exceed $5 million, in accordance with installation procedures.

(ii) The estimated dollar amounts shall include all options and later phases of the same program or project.

(iii) Acquisition plans are not required for the following acquisitions:

(A) Architect-engineering services;

(B) Broad agency announcements (see 1835.016) or unsolicited proposals;

(C) Basic research from nonprofit organizations;

(D) Utility services available from only one source;

(E) From or through other Government agencies;

(F) Industrial facilities required in support of related contracts; or

(G) MidRange procedure awards (see part 1871). However, acquisition plans are required for commercial item acquisitions that exceed the MidRange dollar thresholds for noncommercial items.

(iv) Acquisition plans shall be approved before soliciting proposals.

(v) Approval of an acquisition plan does not constitute approval of any special conditions, or special clauses that may be required unless the plan so specifies, and the individual having approval authority is a signatory of the plan. All required deviations shall be approved through the procedures described in FAR 1.4 and 1801.4.

(vi) A single acquisition plan may be used for all phases of a phased acquisition provided the plan fully addresses each phase, and no significant changes occur after plan approval to invalidate the description of the phases. If such significant changes do occur, the plan shall be amended and approved at the same level as the original plan.

(e) Acquisition plans should be prepared on a program or system basis when practical. In such cases, the plan should fully address all component acquisitions of the program or system.

1807.105 Contents of written acquisition plans.

(NASA supplements paragraphs (a) and (b))

Acquisition plans shall address each applicable topic listed in FAR 7.105, as supplemented by this section. Plans shall be structured by subject heading using each italicized topic heading in the same sequence as presented in the FAR. Subheadings should be used when appropriate (e.g., the separate items under contracting considerations at 7.105(b)(4)). Topics not applicable to a given acquisition (e.g., design-to-cost and should-cost are not compatible with service acquisitions), should be marked N/A.

(a)(1) Describe in nontechnical terms the supplies or services to be acquired. Include quantities.

(3) Identify the estimated cost and describe the estimating methodology.

(5) Specify the delivery or performance period requirements separately by the basic contract, each option, and the total.

(8) Streamlining applies to all NASA acquisitions. Describe all planned streamlining procedures.

(b)(3) Address how cost realism will be evaluated.

(4)(A) If an incentive contract is planned, describe the planned incentive(s) and the anticipated effects.

(B) Describe subcontracting issues, including all applicable subcontracting goals. (See FAR part 19 and part 1819).

(5)(A) Identify the estimated cost separately by the basic contract, each option and total amount.

(B) Identify the funding by fiscal year and unique project number (UPN).

(C) Discuss planned approaches to eliminate funding shortfalls (vs. the estimated cost).

(6) Identify the type of work statement/specification planned. Specifically address the applicability of performance-based requirement descriptions and the availability of commercial sources for the supplies/services.

(10) Address contract management issues, including planned delegations of administrative functions.

(19) If the period between release of solicitation to contract award is more than 120 calendar days (180 days for formal SEB competitions), explain why that goal cannot be met.

1807.170 Acquisition Strategy Meeting (ASM).

(a) The ASM is an acquisition plan conducted through a meeting attended by all interested NASA offices. At the meeting, the acquisition plan topics and structure specified in 1807.105 are presented in briefing format, and formal written minutes prepared to summarize the decision, actions, and conclusions of the ASM members. The approved minutes, along with the briefing charts, shall be included in the contract file to document completion of the acquisition plan required by 1807.103.

(b) The ASM is not a requirements definition meeting. It is a meeting to seek approval for the proposed acquisition approach for requirements that were previously defined and agreed to by the cognizant offices.

(c) Headquarters ASMs will be chaired by the Associate Administrator for Procurement or designee. The Headquarters Office of Procurement (Code HS) will prepare the minutes of Headquarters ASMs and distribute them to all attendees for review prior to approval by the ASM chairperson.

(d) For field installation ASMs, the minutes shall be approved in accordance with installation procedures.

Subpart 1807.2—Planning for the Purchase of Supplies in Economic Quantities

1807.204 Responsibilities of contracting officers.

(NASA supplements paragraph (a))

(a) The contracting officer shall transmit in writing to the cognizant inventory management/requirements office either the actual offeror responses or a summary of their salient points. The transmittal should be made within five working days after the closing date for receipt of offers; however, if a response indicates the potential for a significant savings, it should be transmitted immediately.

Subpart 1807.3—Contractor Versus Government Performance

1807.307 Appeals.

(NASA supplements paragraph (a))

(a) Installations shall establish appeals procedures in accordance with NMI 7410.3, Delegation of Authority for Acquisition of Commercial Activities for NASA's Use.

Subpart 1807.5—Inherently Governmental Functions

1807.503 Policy.

(NASA supplements paragraph (e))

(e) The field installation requirements office shall provide the contracting officer the written determination that none of the statement of work tasks are inherently governmental. Disagreements regarding the determination shall be resolved in accordance with installation procedures.

Subpart 1807.70—[Reserved]

Subpart 1807.71—Master Buy Plan

1807.7100 General.

The Master Buy Plan provides information on planned acquisitions to enable management to focus its attention on a representative selection of high-dollar-value and otherwise sensitive acquisitions.

1807.7101 Applicability.

(a) The Master Buy Plan applies to each negotiated acquisition, including supplemental agreements, where the dollar value, including the aggregate amount of options, follow-on acquisitions, or later phases of multi-phase acquisitions, is expected to equal or exceed $50,000,000.

(b) For initial annual Master Buy Plan submission only, each installation shall submit its three largest acquisitions regardless of dollar value and all acquisitions over $50,000,000.

(c) The procedure also applies to:

(1) Any supplemental agreement that contains either new work, a debit change order, or a credit change order (or any combination/consolidation thereof), if the absolute value of the actions equals or exceeds $50,000,000 (e.g., the absolute value of a supplemental agreement adding $30,000,000 of new work and deleting $30,000,000 of work is $60,000,000, and is therefore subject to the Master Buy Plan).

(2) Any supplement agreement that contains one or more elements (new work and/or individual change orders)

of a sensitive nature that, in the judgment of the installation or Headquarters, warrants Headquarters consideration under the Master Buy Plan, even though the value does not equal or exceed $50,000,000.

(d) The Master Buy Plan does not apply to incremental funding actions or termination settlement agreements.

1807.7102 Submission, selection, and notification procedures.

1807.7102–1 Submission of Master Buy Plan.

(a) Prior to July 15th of every year, each installation shall submit to the Headquarters Office of Procurement (Code HS) a Master Buy Plan (electronically or original and eight copies) for the next fiscal year, listing every known acquisition that

(1) Meets the criteria in 1807.7101,

(2) Is expected to be initiated in that fiscal year, and

(3) Has not been included in a previous Master Buy Plan or amendment to a Master Buy Plan.

(b) The fiscal year Master Buy Plan shall list all uncompleted acquisitions selected for Headquarters review and approval from prior Master Buy Plans and amendments to Master Buy Plans. These acquisitions should be listed by the appropriate fiscal year Master Buy Plan and individual item numbers, and should indicate the current status of the individual acquisition documents previously selected for Headquarters review and approval.

(c) Plans shall be prepared in accordance with 1807.7103 and shall identify the individual acquisition documents involved for every acquisition listed. Acquisition documents that may require Headquarters approval will be held in abeyance until receipt of the notification required by 1807.7102–3. This is not to preclude the planning for or initiation of such documents up to that point where Headquarters approval may be required.

1807.7102–2 Submission of amendments to the Master Buy Plan.

(a) Acquisitions identified by installations after submission of their Master Buy Plan and meeting the criteria in 1807.7102–1(a) shall be submitted to Headquarters in accordance with 1807.7103 and identified as an amendment to the fiscal year Master Buy Plan submission.

(b) Master Buy Plan submissions should not be accomplished after the fact. Amendments shall be submitted sufficiently in advance of contract award date to allow Headquarters to select those acquisition documents that will be subject to Headquarters review and approval without creating an unacceptable delay in contract placement.

(c) When timely submittal is not possible, the installation shall provide with the amendment a narrative explaining the circumstances leading to the late submittal. A Master Buy Plan submission for a contract change order expected to meet the criteria in 1807.7101 shall be submitted to Headquarters immediately upon issuance of the change order.

1807.7102–3 Selection and notification procedures.

(a) The Headquarters Office of Procurement (Code HS) shall select acquisition documents from the Master Buy Plan and amendments to Master Buy Plans to receive Headquarters review and approval and shall designate source selection officials.

(b) When, subsequent to document selection or delegation, an acquisition is changed (for example, increase or decrease in dollar amount, change in requirement), canceled, superseded, deferred, or becomes no longer subject to the Master Buy Plan procedures in accordance with the criteria in 1807.7101, the installation shall immediately notify Code HS, giving the reasons. Code HS shall notify the installation's procurement office in writing of any further action that may be required.

(c) Acquisition documents not selected for Headquarters review will be subject to after-the-fact reviews by Headquarters during normal procurement management surveys or other special reviews. Acquisition delegations may subsequently be rescinded if a Headquarters review is deemed appropriate.

1807.7103 Format of Master Buy Plan.

In accordance with the requirements of 1807.7102–1 and 1807.7102–2, Master Buy Plans and amendments to Master Buy Plans shall be prepared in accordance with the format illustrated in Table 1807–1.

Subpart 1807.72—Acquisition Forecasting

1807.7200 Scope of subpart.

This subpart prescribes the acquisition forecasting procedure required to comply with the Business Opportunity Development Reform Act of 1988.

1807.7201 Definitions.

Class of contracts means a grouping of acquisitions, either by dollar value or by the nature of supplies and services to be acquired.

Contract opportunity means planned new contract awards exceeding $25,000.

1807.7202 Policy.

As required by statute, it is NASA policy to

(a) Prepare an annual forecast and semiannual update of expected contract opportunities or classes of contract opportunities for each fiscal year;

(b) Include in the forecast contract opportunities that small business concerns, including those owned and controlled by socially and economically disadvantaged individuals, may be capable of performing; and

(c) Make available such forecasts to the public.

1807.7203 Responsibilities.

(a) NASA procurement officers shall furnish the Headquarters Office of Procurement (Code HS) with the data required in 1807.7204 on September 1 for the annual forecast and March 15 for the semiannual update.

(b) Code HS will prepare and distribute the consolidated annual forecast and the semiannual update.

1807.7204 Forecast data.

(a) The annual forecast shall contain—

(1) Summary historical data (based on information provided by the Headquarters Office of Procurement (Codes HC and HS)) on the class of contract opportunities below the simplified acquisition threshold;

(2) Identification of all known contract opportunities in excess of the simplified acquisition threshold. Each such action should be identified as one of the three broad categories of acqusition—Research and Development, Services, or Supplies and Equipment and shall include the following information:

(i) A brief description not to exceed ten typed lines;

(ii) Approximate dollar value within the following dollar ranges: $100,000 to $1,000,000; $1,000,000 to $5,000,000; and over $5,000,000;

(iii) Anticipated time (by fiscal year quarter) for the issuance of the solicitation;

(iv) Identification if it is reserved for performance by small business concerns including those owned and controlled by socially and economically disadvantaged individuals;

(v) Identification as competitive or noncompetitive; and

(vi) Identification and telephone number of a center point of contact.

(b) The semiannual report shall be an update of the data provided by the annual forecast. This update should

provide information on new requirements not previously reported and on changes in data related to actions previously identified.

1807.7205 Public availability.

(a) The annual forecast and semiannual update are available via the NASA Acquisition Internet Service (NAIS) (http://procurement.nasa.gov.).

(b) The forecasts may also be obtained from the Headquarters Office of Procurement (Code HS) and the Office of Small and Disadvantaged Business Utilization (Code K).

BILLING CODE 7510–01–M

TABLE 1807–1

FORMAT
MASTER BUY PLAN PROCEDURES

Line Item No: _____ **FY** _____ **Page No.:** _____

Installation: _____ **Date:** _____

(1) Cognizant Headquarters Office	(2) Descriptive Title of Procurement	(3) Estimated Dollar Value	(4) Acquisition Plan	(5) JOFOC	(6) RFP	(7) SEB	(8) Pre-Neg	(9) Contract Review

(10)
Current
Status

(11)
Remarks

INSTRUCTIONS

General

1. Prepare on 8-1/2" x 11" paper or electronically.
2. List only one procurement on each page and number each page. Sequentially number each procurement action with a two digit "Line Item Number" beginning with "01" for each annual submission and subsequent amendments.
3. For the initial submission only, list procurements and their current status from prior fiscal year(s) Master Buy Plans and amendments to MBPs that have not been completed.
4. Do not reproduce these instructions on the submission.

Supplementary instructions by heading number

(1) Include letter code and Headquarters contact, if known.
(2) Include an "N" to indicate new procurement or "FO" to indicate follow-on procurement.
(3) A range of dollar values may be used, if the exact value is unavailable. Express the range as $120M to $25M, $25M to $50M, and so forth in $25M increments. Include all phases of the procurement. All dollar values must be in real year dollars, i.e., adjusted to include anticipated inflation.
(4) Installation recommendation ("Y" or "N") that an Acquisition Strategy Meeting be held. (The final decision will be made by Headquarters upon review of the MBP submission.)
(5)-(9) Use "X" to indicate applicable documents. If column (8) contains and "X", include your recommendation in that column for the Source Selection Official (SSO). The recommendation should be either the Center SSO or Headquarters SSO (HSSO).
(10) Status should include scheduled date for next event. (Complete horizontally.)
(11) Include data considered pertinent and indicate expected date for placement of contract. If less than full and open competition is involved, indicate the authority being used, identify the firm(s) to which the procurement is being limited, and indicate the current status of the justification document. Include the names and telephone numbers of the cognizant installation procurement person and technical representative.

REPRODUCED AT GOVT. EXPENSE

BILLING CODE 7510–01–M

3. Part 1808 is revised to read as follows:

PART 1808—REQUIRED SOURCES OF SUPPLIES AND SERVICES

Sec.
1808.002 Use of other Government supply sources.
1808.002–70 Acquisition of radioisotopes.
1808.002–71 Acquisition of liquid hydrogen.
1808.002–72 Acquisition of propellants.
1808.002–75 Acquisition of mercury.

Subpart 1808.1—Excess Personal Property

1808.103 Information on available excess personal property.

Subpart 1808.4—Federal Supply Schedules

1808.404 Using schedules.
1808.404–3 Requests for waivers.

Subpart 1808.6—Acquisition From Federal Prison Industries, Inc.

1808.605 Clearances.

Subpart 1808.7—Acquisition From Nonprofit Agencies Employing People Who Are Blind or Severely Disabled

1808.705 Procedures.
1808.705–1 General.

Subpart 1808.8—Acquisition of Printing and Related Supplies

1808.802 Policy.
1808.870 Contract clause.

Subpart 1808.11—Leasing of Motor Vehicles

1808.1100 Scope of subpart.

Authority: 42 U.S.C. 2473(c)(1)

PART 1808—REQUIRED SOURCES OF SUPPLIES AND SERVICES

1808.002 Use of other Government supply sources.

1808.002–70 Acquisition of radioisotopes.

(a) DOE Form 5400.3, U.S. Department of Energy Isotope Order Blank, and NRC Form 313, U.S. Nuclear Regulatory Commission Application for Material License, shall be used to acquire radioisotopes, as stated on the back of DOE Form 5400.3. No other type of order blank, purchase order, or contract may be used in lieu of these forms.

(b) NRC Form 313 shall be filed with the Chief, Radioisotopes Licensing Branch, Division of Fuel Cycle and Material Safety, United States Nuclear Regulatory Commission, Washington, DC 20555. If the application meets all regulatory requirements and applicable standards, the Radioisotopes Licensing Branch, Nuclear Regulatory Commission, will issue a license to the applicant. After receipt of the license, a completed DOE Form 5400.3 (in duplicate, if the contracting office wants an accepted copy of the form back from the supplier), the license, and a Government bill of lading shall be sent to the appropriate DOE laboratory. If a bill of lading is not furnished, shipment shall be made collect on a commercial bill of lading, to be converted at destination.

(c) NRC Form 313 and DOE Form 5400.3 shall be requisitioned directly from United States Nuclear Regulatory Commission, Attn: Radioisotopes Licensing Branch, Division of Fuel Cycle and Material Safety, Washington, DC 20555.

1808.002–71 Acquisition of liquid hydrogen.

Rquests for liquid hydrogen shall be submitted to the John F. Kennedy Space Center, National Aeronautics and Space Administration, Kennedy Space Center, FL 32899, Attn: Director of Logistics Operations.

1808.002–72 Acqusition of propellants.

(a) General. NASA (and its contractors when authorized in accordance with 1851.1) may acquire the items listed in paragraph (j) of this section (except for liquid hydrogen; see 1808.002–71) on a reimbursable basis from the San Antonio Air Logistics Center (SA–ALC), Kelly Air Force Base, Texas, under the Air Force Missile Procurement Fund (MPF). The Air Force MPF shall be used as a supply source for propellants whenever there are economic or other advantages to the Government. Field installations and offices obtaining supplies from the MPF shall comply with the reporting requirements of paragraph (f) of this section.

(b) Requests for acquisition. To obtain the materials listed in paragraph (j) of this section from the Air Force MPF, NASA contracting offices will execute a NASA-Defense Purchase Request (NASA Form 523) (see 1853.303–523) and forward it to Headquarters, SA–ALC, Kelly Air Force Base, TX 78241, Attention: SFS. The following additional information should be provided on the form:

(1) Contract number (when material is required for use by a NASA contractor).

(2) Delivery address.

(3) Mode of transportation (rail, trailer, barge, etc.). When the procurement request covers requirements for materials not previously forecasted or covers significant changes to previously reported requirements, SA–ALC should be notified immediately of such requirements.

(c) Delivery requests.

(1) A delivery request is a call on the Air Force, made against a NASA-Defense Purchase Request (NASA Form 523), specifying the time and place of delivery. On the basis of the estimated requirements, the Air Force will notify NASA field installations and contractors of the name and address of the Air Force office or producing contractor's plant to which requests for delivery of materials shall be made. Delivery requests may be placed by any means of communication that time justifies; however, all verbal requests for delivery must be confirmed in writing within 24 hours. The delivery request, whether oral or written, must cite the NASA-Defense Purchase Request number under which the material is being ordered and contain the following information:

(i) Nomenclature and National Stock Number.

(ii) Quantity.

(iii) Program, project, and task.

(iv) Contract number (when material is required for use by a NASA contractor).

(v) Delivery address.

(vi) Dates of delivery.

(vii) Mode of transportation.

(viii) Location of weighting stations and scales (if weighing of the products before delivery is required).

(2) Each delivery request shall be numbered as follows to simplify identification and control: the last two digits of the calendar year; a dash; and a consecutive number beginning with 1 to run through the year (e.g., 89–5, for the fifth request made in 1989). Changes to a request are identified by adding an alphabetical designator beginning with (A) to the number.

(d) Receiving procedures.

(1) Receiving documents. Receipt of materials shall be evidenced on the receiving document received with the shipment by the signature of an individual authorized by NASA to receive materials from the Air Force. Every effort should be made to ensure that the NASA-Defense Purchase Request number is recorded on the receiving document before signing.

(2) Weighing facilities. Local weighing facilities (NASA-owned, contractor-owned, commercial, or State-operated) may be used to determine quantities of product received. If a discrepancy exists between the quantities shown on receiving documents and the quantities actually received—

(i) A certified weighing ticket evidencing actual weight at destination shall be obtained; and

(ii) A copy of the receiving document (AF Form 857 or DD Form 250) and the original weighting ticket shall be forwarded to Headquarters, SA–ALC, Kelly Air Force Base, TX 78241, Attention: ACFOM, identifying the discrepancy.

(3) Distribution of receipts. Copies of all receiving documents except the AF Form 857 shall be transmitted to the Headquarters, SA–ALC, Kelly Air Force Base, TX 78241, Attention: SACAOM. Receiving documents may be accumulated and submitted on the 10th, 20th, and last day of each month.

(e) Billing. The costs of materials obtained through the MPF are reimbursable. After delivery, a Standard Form 1080 (Voucher for Transfers Between Appropriations and/or Funds (Disbursement)), supported by documentary evidence of delivery, will be submitted by Headquarters, SA–ALC to the NASA installation designated in the NASA Form 523.

(f) Reporting requirements.

(1) Field installations shall submit periodic estimates of requirements for materials listed in paragraph (j) of this section for all programs under their cognizance, including in-house contractor requirements. Reports shall be submitted in duplicate on AF Form 858, Forecast of Propellant Requirements.

(2) The reports shall be forwarded no later than June 1 and December 1 to reach Headquarters, SA–ALC, Kelly AFB, TX 78241, Attn: SFS. Supplemental reports advising of additions to or significant changes in previous reports may be submitted at any time. The reports, covering all materials listed in paragraph (j) of this section, due in June and December, shall begin with requirements as of the following July 1 and January 1, respectively, and shall cover a 3-year period. Requirements shall be shown by month for the first 6 months, and by quarters for the remaining 2½-year period.

(3) Estimated requirements and other pertinent data required from contractors shall be obtained on Air Force Form 858.

(g) Report content. Reports shall be made using a separate report form for each material and shall provide, for each item of material, the—

(1) Contract number;

(2) Program and/or project;

(3) Specific task within the project;

(4) End use when not associated with the named program or project;

(5) Contractor's name;

(6) Specific location of use (shipping destination); and

(7) Planned source of supply.

(h) Basis for developing materials requirements. In computing requirements, consideration shall be given to such elements as lead time, waste factors, transfer, and storage losses so that phased requirements reflect the total gross quantities required to be delivered to the use or storage site. Since the requirements estimates are being used by other Government agencies acting as supply sources to contract for materials, estimates must be as accurate as possible.

(i) NASA coordination. The Kennedy Space Center shall coordinate the review of all data and establish NASA policy and procedures. The data shall be used as the basis for NASA requirements reports to various Government agencies for planning and supply support.

(j) Table of reportable materials.

Ammonia, Technical (Anhydrous) (Low Oil Content) 99.97 percent purity, Spec 0–A–445
Argon Gas, 6000 PSI, AFPID 6830–5
Propellant, Ammonia, Liquid, Anhydrous 99.5 percent purity, Spec MIL–P–27406
Propellant, Chlorine Trifluoride, Spec MIL–P–81399
Propellant, Deuterium, Gaseous, AFPID 9135–20
Propellant, Fluorine, Gaseous, Spec MIL–P–27405
Propellant, Fluorine, Liquid, Spec MIL–P–27405
Helium, Technical Grade A, Spec BB–H–1168
Propellant, Isopropyl Alcohol, AFPID 9135–18
Propellant, Hydrazine, Standard Grade, Spec MIL–P–26536
Propellant, Hydrazine, Monopropellant Grade, Spec MIL–P–26536
Propellant, Hydrazine/Unsymmetrical Dimethylhydrazine, Spec MIL–P–27402
Propellant, Hydrogen, Gaseous, Type I, Spec MIL–P–27201
Propellant, Hydrogen, Liquid, Type II, Spec MIL–P–27201
Propellant, Hydrogen Peroxide, Spec MIL–P–16005
Propellant, Hydrogen Peroxide, Electrolytic Process, Spec MIL–P–16005
Propellant, Jet Fuel, Grade RJ–1, Spec MIL–F–25558
Propellant, JPX, 50% UDMH–50% JP–4, Spec MIL–P–26694
Propellant, JPX, 17% UDMH–83% JP–4, Spec MIL–P–26694
Propellant, Kerosene, Grade RP–1, Spec MIL–P–25576
Propellant, Monomethyl Hydrazine, Spec MIL–P–27404
Propellant, Neon, Liquid, AFPID 9135–16
Propellant, Nitric Acid, Type IIIB, Spec MIL–P–7254
Propellant, Nitric Acid, Type III LS, Spec MIL–P–7254
Propellant, Nitric Acid, Type IV (High Density Acid), Spec MIL–P–7254
Propellant, Nitrogen Tetroxide (NTO) (MON–1) (MON–3), Spec MIL–P–26539
Propellant, Nitrogen Tetroxide (NTO), MIL–P–26539
Propellant, Nitrogen Tetroxide (MON–1), Spec MIL–P–26539
Propellant, Nitrogen Tetroxide (MON–3), Spec MIL–P–26539
Propellant, Oxygen, Grade B, Spec MIL–P–25508
Propellant, Oxygen, Grade A, Spec MIL–P–25508
Propellant, Oxygen, Grade F, Spec MIL–P–25508
Propellant Pressurizing Agent, Helium, Spec MIL–P–27407, 99.995 pct min assay
Propellant Pressurizing Agent, Nitrogen, Type II, Liquid Grade C, Spec MIL–P–27401
Propellant Pressurizing Agent, Nitrogen, Type I, Gaseous Grade A, Spec MIL–P–27401
Propellant Pressurizing Agent, Nitrogen, Type I, Grade B, Spec MIL–P–27401
Propellant Pressurizing Agent, Nitrogen, Type II, Grade A, Spec MIL–P–27401
Propellant Pressurizing Agent, Nitrogen, Type II, Grade B, Spec MIL–P–27401
Propellant, Unsymmetrical Dimethylhydrazine, Spec MIL–P–25604
Propellant, Nitrogen Trifluoride Spec MIL–P–87896
Propellant, Pressurizing Agent, Argon, Liquid, AFPID 9135–19

1808.002–75 Acquisition of mercury.

(a) Requests for mercury by NASA installations for their use or for use by their cost-reimbursement type contractors shall be made to the Mercury Contract Specialist, Directorate of Stockpile Contracts, DLA, Defense National Stockpile Center, 8725 John J. Kingman Rd., #3339, Ft. Belvoir, VA 22060–6223. DLA will furnish the current fair market value to NASA. The unit of issue is a 76-pound flask.

(b) Requests for clearance to purchase quantities of 76 pounds or more from sources other than DLA shall be submitted to the office in paragraph (a) of this section and must be accompanied by a statement of reasons why the available excess mercury is unsuitable for use by the requesting field installation.

Subpart 1808.1—Excess Personal Property

1808.103 Information on available excess personal property.

In addition to the sources identified in FAR 8.103, information on availability of NASA excess property is maintained by the Installation Property Disposal Officer and the NASA

Equipment Management System (NEMS) Coordinator.

Subpart 1808.4—Federal Supply Schedules

1808.404 Using schedules.

1808.404–3 Requests for waivers.

(NASA supplements paragraphs (a) and (b)).

(a) The head of the NASA office initiating the procurement request or a designated representative shall furnish the NASA contracting office a signed statement identifying the supplies or services to be purchased and explaining why similar items listed in the applicable schedule will not meet the requirement.

(b) If a waiver is not granted, the case shall be referred to the Associate Administrator for Procurement (Code HS) for a final decision as to whether the non-schedule item will be purchased. The Associate Administrator for Procurement shall promptly notify the Commissioner, Federal Supply Service, GSA, and the contracting office of the decision.

Subpart 1808.6—Acquisition From Federal Prison Industries, Inc.

1808.605 Clearances.

(NASA supplements paragraphs (a) and (c)).

(a) NASA purchase orders or contracts written pursuant to a general or blanket clearance need not be supported by a copy of the clearance, but the clearance number must be cited on the purchase order or contract as well as on the initial voucher. A copy of the clearance certificate must be attached to the initial voucher.

(c) When disputes occur, the contracting officer shall refer the matter to the Associate Administrator for Procurement (Code HS) for review and any further action. Such referrals shall include a complete statement of the attempts made to resolve the matter.

Subpart 1808.7—Acquisition From Nonprofit Agencies Employing People Who are Blind or Severely Disabled

1808.705 Procedures.

1808.705–1 General.

The Federal Standard Requisitioning and Issue Procedure (Federal Property Management Regulation, Subpart 101–26.2) shall be used to obtain nonprofit agency-produced supplies from GSA supply distribution facilities.

Subpart 1808.8—Acquisition of Printing and Related Supplies

1808.802 Policy.

(NASA supplements (paragraph (b)).

(b) (i) The Headquarters Information Resources Management Division (Code JT) is the NASA central printing authority.

(ii) Requests for approval to contract for printing supplies or services shall be addressed to Code JT. Approval to contract for such supplies or services is restricted to those requirements meeting the following conditions:

(A) An individual order is under $1,000;

(B) The order is not of a continuing or repetitive nature; and,

(C) The Public Printer certifies it cannot be provided more economically through the GPO.

1808.870 Contract clause.

The contracting officer shall insert the clause at 1852.208–81, Restrictions on Printing and Duplicating, in solicitations and contracts where there is a requirement for any printing, and/or any duplicating/copying in excess of that described in paragraph (c) of the clause.

Subpart 1808.11—Leasing of Motor Vehicles

1808.1100 Scope of subpart.

NASA procedures for leasing motor vehicles from GSA or commercial sources are contained in NMI 6000.5, Transportation Management.

4. Part 1809 is revised to read as follows:

PART 1809—CONTRACTOR QUALIFICATIONS

Subpart 1809.1—Responsible Prospective Contractors

Sec.

1809.104–4 Subcontract responsibility.
1809.106 Preaward surveys.
1809.106–1 Conditions for preaward surveys.
1809.106–2 Requests for preaward surveys.
1809.106–3 Interagency preaward surveys.
1809.106–70 Preaward surveys performed by NASA installations.

Subpart 1809.2—Qualifications Requirements

1809.200 Scope of subpart.
1809.202 Policy.
1809.203 QPL's, QML's, and QBL's.
1809.203–70 General.
1809.203–71 Waiver of qualification requirements.
1809.206 Acquisitions subject to qualification requirements.
1809.206–1 General.
1809.206–70 Small businesses.
1809.206–71 Contract clause.

Subpart 1809.4—Debarment, Suspension, and Ineligibility

1809.403 Definitions.
1809.404 List of Parties Excluded from Federal Procurement and Nonprocurement programs.
1809.405 Effect of listing.
1809.405–1 Continuation of current contracts.
1809.405–2 Restrictions on subcontracting.
1809.406 Debarment.
1809.406–3 Procedures.
1809.407 Suspension.
1809.407–3 Procedures.
1809.408 Certification regarding debarment, suspension, proposed debarment, and other responsibility matters.
1809.470 Reporting of suspected evasive actions and causes for debarment or suspension.
1809.470–1 Situations requiring reports.
1809.470–2 Contents of reports.
1809.470–3 Addresses and copies of reports.

Subpart 1809.5—Organizational and Consultant Conflicts of Interest

1809.500 Scope of subpart.
1809.503 Waiver.
1809.506 Procedures.
1809.507 Solicitation provisions and contract clause.
1809.507–2 Contract clause.

Subpart 1809.6—Contractor Team Arrangements

1809.670 Contract clause.

Authority: 42 U.S.C. 2473(c)(1)

PART 1809—CONTRACTOR QUALIFICATIONS

Subpart 1809.1—Responsible Prospective Contractors

1809.104–4 Subcontractor responsibility.

Generally, the Canadian Commercial Corporation's (CCC) proposal of a firm as its subcontractor is sufficient basis for an affirmative determination of responsibility. However, when the CCC determination of responsibility is not consistent with other information available to the contracting office, the contracting officer shall request from the CCC and any other sources whatever information is necessary to make the responsibility determination.

Upon request, CCC shall be furnished the rationale for any subsequent determination of nonresponsibility.

1809.106 Preaward surveys.

1809.106–1 Conditions for preaward surveys.

(NASA supplements paragraph (a)).

(a) (i) Preaward surveys are used only to assist the contracting officer to make determinations of responsibility under FAR 9.104. They are not to be used to obtain information useful to proposal evaluation that does not directly relate

to the responsibility determination. Accordingly, preaward surveys shall not be used except in rare circumstances when determination of responsibility cannot be made without the specific information that can be provided only in a preaward survey report and only after all other means of obtaining the required information have been explored.

(ii) Surveys shall not be performed for companies of any size performing study or research contracts.

(iii) The procurement officer shall approve all preaward survey requests.

1809.106–2 Requests for preaward surveys.

(NASA supplements paragraph (a)).

(a) The ''Walsh-Healey Public Contracts Act'' block of Section I is for information purposes only. If information is needed for a determination on the offeror's eligibility under the Walsh-Healey Act, it must be specifically requested in block 20.H. of Section III.

1809.106–3 Interagency preaward surveys.

(NASA supplements paragraph (a)).

(a) If the survey will be performed for NASA by a DOD agency, the SF 1403 request is to be sent to the appropriate office shown in the DOD Directory of Contract Administration Services Components, DLAH 4105.4, Attn: Preaward Survey Monitor. DOD normally allows seven working days in which to conduct a full survey and submit the report to the requesting agency.

1809.106–70 Preaward surveys performed by NASA installations.

In discussions with representatives of the company being surveyed, NASA preaward survey team members shall not refer to or comment on the possibility of award to the prospective contractor. This does not preclude discussion with a prospective contractor of questionable areas that require clarification. Information obtained during the survey will be treated in strict confidence and divulged only to those Government representatives having a need to know.

Subpart 1809.2—Qualifications Requirements

1809.200 Scope of subpart.

This subpart prescribes policies and procedures to be followed in the use of qualified products lists for acquisition of parts as authorized by NMI 5320.5, Basic Policy for NASA Space Flight Program Electrical, Electronic, and Electromechanical (EEE) Parts.

1809.202 Policy.

(NASA supplements paragraphs (a) and (e)).

(a) Authority regarding agency head actions under FAR 9.202(a) is delegated to the cognizant technical activity, with approval by the installation's competition advocate.

(e) The approval authority of FAR 9.202(e) is delegated to the installation's competition advocate. Requests shall be prepared by the cognizant requirements office and submitted via the procurement officer.

1809.203 QPL's, QML's and QBL's.

1809.203–70 General.

(NASA supplements paragraph (a)).

(a) The Deputy Associate Administrator for the Office of Safety and Mission Assurance (Code Q), is responsible for justifying, determining, and approving NASA's need for inclusion and continued use of qualification requirements in specifications under the NASA EEE Parts and Advanced Interconnect Program.

1809.203–71 Waiver of qualification requirements.

When acquiring a product under a specification that includes qualification requirements either for the end item or for components of the end item, the NASA installation conducting the acquisition can waive the qualification requirements. Directing a waiver of the end item qualification requirement constitutes adequate authorization for waiver of product qualification requirements. When a waiver has been granted, the solicitation shall specifically indicate that the qualification requirement is inapplicable. Such information shall also be included in any synopsis of the acquisition (see FAR subpart 5.2).

1809.206 Acquisitions subject to qualification requirements.

1809.206–1 General.

(NASA supplements paragraph (b) and (c)).

(b)(i) The authority to determine that an emergency exists is delegated to the installation's competition advocate. Requests for determination shall be prepared by the cognizant requirements office and submitted through the procurement officer.

(ii) Requests not to enforce a qualification requirement in a nonemergency situation shall be prepared by the cognizant requirements office and approved by the Headquarters Office of Safety and Mission Assurance (Code Q).

(c) If an offeror seeks to demonstrate its capability, both the product and the producer must meet the established standards.

1809.206–70 Small businesses.

If a small business otherwise eligible for award has been placed in a special status on a Qualified Products List (Mil–Bul–103) or the Qualified Manufacturers List (QML–38510) established as a part of the NASA Microelectronics Reliability Program and the contracting officer determines that the small business does not appear to have the capacity to perform, the certificate of competency procedures in FAR subpart 19.6 are applicable.

1809.206–71 Contract clause.

When qualified products (end items or components of end items) are being procured, the contracting officer shall insert the clause at 1852.209–70, Product Removal from Qualified Products List, in the solicitation and in the resulting contract.

Subpart 1809.4—Debarment, Suspension, and Ineligibility

1809.403 Definitions.

For purposes of FAR subpart 9.4 and this subpart, the Associate Administrator for Procurement is the ''debarring official,'' the ''suspending official,'' and the agency head's ''designee.''

1809.404 List of parties excluded from federal procurement and nonprocurement programs.

(NASA supplements paragraphs (c) and (d)).

(c) The Office of Procurement (Code HS) is responsible for taking the actions listed in FAR 9.404(c).

(d)(1) Installation procurement offices shall notify Code HS of how many copies of the List they want and provide a single mailing address at the installation. Code HS will place the order for the copies which will be mailed directly to the installation. Electronic access is also available as described in the List.

1809.405 Effect of listing

If it is believed that a new contract or subcontract must be awarded to a firm on the List of Parties Excluded from Federal Procurement and Nonprocurement Programs, the procurement officer shall prepare a request for a determination with all necessary supporting information and forward it to the Associate Administrator for Procurement (Code HS) for approval.

1809.405–1 Continuation of current contracts. (NASA supplements paragraph (c)).

(c) Approval of contract renewals or extensions shall be requested in accordance with 1809.405.

1809.405–2 Restrictions on subcontracting. NASA supplements paragraph (a)).

(a) Approval of consent to subcontract shall be requested in accordance with 1809.405.

1809.406 Debarment.

1809.406–3 Procedures.

(NASA supplements paragraph (a)).

(a) The report required by FAR 9.406–3(a) shall be prepared in accordance with 1809.470.

1809.407 Suspension.

1809.407–3 Procedures.

(NASA supplements paragraph (a)).

(a) Reports shall be prepared in accordance with 1809.470.

1809.408 Certification regarding debarment, suspension, proposed debarment, and other responsibility matters.

(NASA supplements paragraph (a)).

(a)(2) (A) If the offeror indicates that it has been indicted, charged, convicted, or had a civil judgment rendered against it, the contracting officer shall immediately notify the Associate Administrator for Procurement (Code HS), providing details as known, and shall await a response before awarding the contract.

(B) If the offeror discloses information that indicates a need for a debarment or suspension determination, the contracting officer shall report the facts to the Associate Administrator for Procurement (Code HS) in accordance with 1809.470.

1809.470 Reporting of suspected evasive actions and causes for debarment or suspension.

1809.470–1 Situations requiring reports.

A report incorporating the information required by 1809.470–2 of this subpart shall be forwarded by the procurement officer to the Associate Administrator for Procurement (Code HS) when a contractor:

(a) Has committed, or is suspected of having committed, any of the acts described in FAR 9.406–2 and 9.407–2; or

(b) Is suspected of attempting to evade the prohibitions of a debarment or suspension imposed under the FAR by changes of address, multiple addresses, formation of new companies, or other devices.

1809.470–2 Contents of reports.

Each report shall be coordinated with local counsel and shall include substantially the following information, if available:

(a) Name and address of the contractor.

(b) Names of the principal officers, partners, owners, or managers.

(c) All known affiliates, subsidiaries, or parent firms, and the nature of the affiliation.

(d) A description of the contract or contracts concerned, including the contract number and office identifying numbers or symbols, the amount of each contract, the amounts paid the contractor and still due, and the percentage of work completed and to be completed.

(e) The status of vouchers.

(f) Whether the contract has been assigned pursuant to the Assignment of Claims Act, and, if so, the name and address of the assignee and a copy of the assignment.

(g) Whether any other contracts are outstanding with the contractor or any affiliates, and, if so, their amount, whether they are assigned pursuant to the Assignment of Claims Act, and the amounts paid or due on them.

(h) A complete summary of all pertinent evidence. If a request for debarment or suspension is based on an indictment or a conviction, provide the evidence upon which the indictment or conviction is based.

(i) An estimate of any damages, sustained by the Government as a result of the contractor's action, including an explanation of the method used in making the estimate.

(j) Recommendation as to

(1) Whether the contractor should be suspended or debarred,

(2) Whether any limitations should be applied to such action,

(3) Whether current contracts should be terminated, and

(4) The period of any debarment.

(k) As an enclosure, a copy of the contract(s) or pertinent excerpts, appropriate exhibits, testimony or statements of witnesses, copies of assignments, and other relevant documentation.

1809.470–3 Addresses and copies of reports.

Reports, including enclosures, shall be submitted to the Office of Procurement (Code HS), with an additional copy to the Headquarters Office of General Counsel (Code G).

Subpart 1809.5—Organizational and Consultant Conflicts of Interest

1809.500 Scope of subpart.

The Associate Administrator for Procurement has authorized the procurement officer to take those actions reserved in FAR subpart 9.5 for the head of the contracting activity. However, see 1809.503 regarding waivers.

1809.503 Waiver.

The Administrator has designated the Associate Administrator for Procurement as the approval authority for waivers under FAR 9.503. The procurement officer shall forward requests for waivers under FAR 9.503 to the Associate Administrator for Procurement (Code HS) for action.

1809.506 Procedures.

(NASA supplements paragraph (b)).

(b) The approving official is the procurement officer when the installation has source selection authority and the Associate Administrator for Procurement (Code HS) when NASA Headquarters has that authority.

1809.507 Solicitation provisions and contract clause.

1809.507–2 Contract clause.

The contracting officer may insert a clause substantially the same as the clause at 1852.209–71, Limitation of Future Contracting, in solicitations and contracts.

Subpart 1809.6—Contractor Team Arrangements

1809.670 Contract clause.

The contracting officer shall insert the clause at 1852.209–72, Composition of the Contractor, in all construction invitations for bids and resulting contracts. The clause may be used in other solicitations and contracts to clarify a contractor team arrangement where the prime contractor consists of more than one legal entity, such as a joint venture.

PART 1810—SPECIFICATIONS, STANDARDS, AND OTHER PURCHASE DESCRIPTIONS

PART 1810—[REMOVED]

(5) Under the authority of 10 U.S.C. chapter 137, Part 1810 is removed.

(6) Part 1811 is added to read as follows:

PART 1811—DESCRIBING AGENCY NEEDS

Sec.
1811.002 Policy.

Subpart 1811.1—Selecting and Developing Requirements Documents

1811.104 Items peculiar to one manufacturer.
1811.104–70 Brand name or equal purchase descriptions.
1811.104–71 NASA solicitation provision.

Subpart 1811.4—Delivery or Performance Schedules

1811.403 Supplies or services.
1811.404 Contract clauses.

Subpart 1811.5—Liquidated Damages

1811.502 Policy.

Subpart 1811.6 Priorities and Allocations

1811.602 General.
1811.603 Procedures.

Authority: 42 U.S.C. 2473(c)(1)

PART 1811—DESCRIBING AGENCY NEEDS

1811.002 Policy.

(NASA supplements paragraph (b))

(b) Implementation of the Metric Conversion Act of 1975, as amended, shall be in accordance with NPD 8010.2B, Use of the Metric System of Measurements in NASA Programs.

Subpart 1811.1—Selecting and Developing Requirements Documents

1811.104 Items peculiar to one manufacturer.

1811.104–70 Brand name or equal purchase descriptions.

(a) Use of brand-name purchase descriptions is the least preferred method for describing Agency requirements. Purchase descriptions containing references to one or more brand-name products, or components of a product, followed by ''or equal'' may be used only in accordance with this part 1811.

(b) The term ''or equal'' should not be added if it is determined under FAR 11.104 that only a particular product meets the essential requirements of the Government.

(c) To the extent feasible, all acceptable brand-name products should be referenced. If ''brand-name-or-equal'' is used, offerors must be given the opportunity to offer products other than those referenced by brand-name if those products will meet the needs of the Government in essentially the same manner.

(d) ''Brand-name-or-equal'' purchase descriptions should set forth the salient physical, functional, or other characteristics essential to the needs of the Government. Purchase descriptions should include the following items and any other information necessary to describe the item:

(1) Complete common generic identification of the item.

(2) Model, make, or catalog number for each brand name product, and identity of the commercial catalog in which it appears.

(3) Name of manufacturer, producer, or distributor of each brand name product referenced (and address if company is not well known).

(e) When it is needed to describe the item required, a commercial catalog description, or pertinent extracts, may be used if the description is identified in the solicitation as being that of the manufacturer, producer, or distributor. The contracting officer shall ensure that a copy of any catalog referenced (except parts catalogs) is available on request for review by offerors at the contracting office.

(f) Offerors offering brand-name products shall not be required to furnish samples; however, solicitations may require the submission of samples from offerors proposing ''or equal'' products.

(g) Proposals offering products differing from brand-name products referenced in a ''brand-name-or-equal'' purchase description shall be considered for award if the contracting officer determines that the offered products meet the salient characteristics required by the solicitation. Offers shall not be rejected because of minor differences in design, construction, or features that do not affect the suitability of the products for their intended use.

(h) Except as provided in paragraph (i)(1) of this section, when a ''brand-name-or-equal'' purchase description is included in a solicitation, the following shall be inserted after each item so described in the solicitation for completion by the offeror:

Offering:
Manufacturer's Name _____
Brand _____
No. _____

(i) If the contracting officer determines that the provision at 1852.211–70 should apply only to certain components, the requirements of paragraph (h) of this section shall apply to them, and a statement substantially as follows shall be included:

The provision entitled Brand Name or Equal applies to the following components:
(List the components to which the provision applies.)

(j) Award documents for brand-name-or-equal acquisitions shall identify the specific products or components the contractor is to furnish. This identification shall include any brand name and make or model number, descriptive material, and any modifications of brand name products specified in the solicitation.

1811.104–71 NASA solicitation provision.

When a ''brand-name-or-equal'' purchase description is used, the contracting officer shall insert in the solicitation the provision at 1852.211–70, Brand Name or Equal.

Subpart 1811.4—Delivery or Performance Schedules

1811.403 Supplies or services.

(NASA supplements paragraph (a))

(a)(3) Contract delivery or performance schedules shall not be expressed in terms of a notice of award. A notice of award as a specific document, separate from the award document itself, is not a contractual document and shall not be used as a reference point for contract performance. See 1814.408 for additional information on notices of award.

1811.404 Contract clauses.

(NASA supplements paragraph (a))

(a)(2) FAR 52.211–8, Time of Delivery, Alternates II and III, shall not be used in NASA contracts.

(3) FAR 52.211–9, Desired and Required Time of Delivery, Alternates II and III, shall not be used in NASA contracts.

Subpart 1811.5—Liquidated Damages

1811.502 Policy.

(NASA supplements paragraph (d))

(d) The procurement officer shall forward recommendations concerning remission of liquidated damages to the Headquarters Office of Procurement (Code HS).

Subpart 1811.6—Priorities and Allocations

1811.602 General.

(NASA supplements paragraph (c))

(c) The Department of Defense is the ''Delegate Agency'' for NASA. The Headquarters Office of Procurement (Code HS) shall coordinate with DOD, as necessary, to ensure that any DOD requirements are met.

1811.603 Procedures.

(NASA supplements paragraphs (e) and (g))

(e)(i) The use of priority ratings on NASA contracts and purchase orders is mandatory except as noted in paragraph (e)(ii) of this section. Priority ratings are

assigned on individual contracts and purchase orders by the contracting officer.

(ii) Priority ratings will not be issued for the following:

(A) Items ordered or requisitioned from the GSA Federal Supply Service.

(B) Items for plant improvement, expansion, or construction, unless they will be physically incorporated into a construction project covered by a rated order, or unless NASA has obtained specific priority rating authority.

(C) Production or construction equipment or items to be used for the manufacture of production equipment, unless NASA has obtained specific priority rating authority.

(D) Items falling under the jurisdiction of agencies other than NASA's Delegate Agency. These are: petroleum, gas, solid fuel, electric power, and all other forms of energy; food; civil transportation and the movement of persons and property by all modes; minerals; water; housing facilities; health facilities; radio-isotopes, stable isotopes, source material and special nuclear material produced in Government-owned plants or facilities operated by or for the Department of Energy; communication services; copper raw materials; crushed stone; gravel; sand; scrap; slag; central steam heat; and waste paper.

(iii) All other NASA orders shall be assigned a DO rating, unless NASA has obtained a DX rating from the Delegate Agency.

(iv) The program identification numbers (DPAS, 15 CFR part 700, SCH L.) to be used by NASA are as follows:

A1 Aircraft

A2 Missiles

A3 Ships

A5 Weapons

A6 Ammunition

A7 Electronic and Communications Equipment

B1 Military Building Supplies

B8 Production Equipment (for Contractor's Account)

B9 Production Equipment (Government-Owned)

C2 Construction

C3 Maintenance, Repair, and Operating Supplies for Facilities

C9 Miscellaneous/Other

(g) Installation requests for assistance shall be directed to the Headquarters Office of Procurement (Code HS).

7. Part 1812 is revised to read as follows:

PART 1812—ACQUISITION OF COMMERCIAL ITEMS

Subpart 1812.1—Acquisition of Commercial Items—General

Sec.
1812.102 Applicability.

Subpart 1812.3—Solicitation Provisions and Contract Clauses for the Acquisition of Commercial Items

1812.301 Solicitation provisions and contract clauses for the acquisition of commercial items.
1812.302 Tailoring of provisions and clauses for the acquisition of commercial items.

Subpart 1812.4—Unique Requirements Regarding Terms and Conditions for Commerical Items

1812.404 Warranties.

Authority: 42 U.S.C. 2473(c)(1).

PART 1812—ACQUISITION OF COMMERCIAL ITEMS

Subpart 1812.1—Acquisition of Commercial Items—General

1812.102 Applicability.

(NASA supplements paragraph (c))

(c) For the acquisition of commercial items of any value, the MidRange procedures described in part 1871 may be used to the extent they are consistent and compliant with FAR part 12 and part 1812. Unless specifically stated, in any conflict between these parts the descending order of precedence is FAR part 12, part 1812, and part 1871.

Subpart 1812.3—Solicitation Provisions and Contract Clauses for the Acquisition of Commercial Items

1812.301 Solicitation provisions and contract clauses for the acquisition of commercial items.

(NASA supplements paragraph (f))

(f)(i) The following clauses may be used in acquisitions of commercial items:

(A) 1852.214–71, Grouping for Aggregate Award.

(B) 1852.214–72, Full Quantities.

(C) 1852.215–84, Ombudsman.

(D) 1852.219–75, Small Business and Small Disadvantaged Business Subcontracting Reporting.

(E) 1852.219–76, NASA Small Disadvantaged Business Goal.

(F) 1852.228–72, Cross-Waiver of Liability for Space Shuttle Services.

(G) 1852.228–76, Cross-Waiver of Liability for Space Station Activities.

(H) 1852.228–78, Cross-Waiver of Liability for NASA Expendable Launch Vehicles.

(I) 1852.232–70, NASA Progress Payment Rates.

(ii) No other provisions and clauses prescribed in the NFS or center documents shall be used in acquisitions of commercial items, except as permitted by FAR 12.302.

1812.302 Tailoring of provisions and clauses for the acquisition of commercial items.

(NASA supplements paragraph (c))

(c) The Associate Administrator for Procurement (Code HS) is the approval authority for waivers. Requests shall be prepared and submitted in accordance with 1801.471.

Subpart 1812.4—Unique Requirements Regarding Terms and Conditions for Commercial Items

1812.404 Warranties.

(b) In acquisitions under the Simplified Acquisition Threshold specified in FAR part 13, no express warranty should be required other than the offeror's commercial warranty.

8. Part 1814 is revised to read as follows:

PART 1814—SEALED BIDDING

Subpart 1814.2—Solicitation of Bids

Sec.
1814.201— Preparation of invitations for bids.
1814.201–5— Part IV—Representations and instructions.
1814.201–6— Solicitation provisions.
1814.201–670— NASA solicitation provisions.

Subpart 1814.3—Submission of Bids

1814.302— Bid submission

Subpart 1814.4—Opening of Bids and Award of Contract

1814.404— Rejection of bids.
1814.404–1 Cancellation of invitations after opening.
1814.407— Mistakes in bids.
1814.407–3— Other mistakes disclosed before award.
1814.407–4— Mistakes after award.
1814.408— Award.
1814.408–1— General.

Authority: 42 U.S.C. 2473(c)(1)

PART 1814—SEALED BIDDING

Subpart 1814.2—Solicitation of Bids

1814.201 Preparation of invitations for bids.

1814.201–5 Part IV—Representations and instructions.

(NASA supplements paragraph (c)).

(c) Section M, Evaluation factors for award.

(i) The contracting officer shall state if award is to be made in the aggregate (all-or-non basis) or by specified groups of items.

(ii) if bidders are required to have special technical qualifications because of the complexity of the equipment being purchased or for some other reason, the contracting officer shall state those qualifications.

1814.201–6 Solicitation provisions.

1814.201–670 NASA solicitation provisions.

(a) The contracting officer shall insert the provision at 1852.214–70, Caution to Offerors Furnishing Descriptive Literature, in invitations for bids. See FAR 52.214–21, Descriptive Literature.

(b) The contracting officer shall insert the provision at 1852.214–71, Grouping for Aggregate Award, in invitations for bids, except for construction, when it is in the Government's best interest not to make award for less than specified quantities solicited for certain items or groupings of certain items. Insert the item numbers and/or descriptions applicable for the particular procurement.

(c) The contracting officer shall insert the provision at 1852.214–72, Full Quantities, in invitations for bids, except for construction, when it is in the Government's best interest not to make award for less than the full quantities solicited.

(d) If a pre-bid conference is planned, the contracting officer shall insert the provision at 1852.215–77, Preproposal/Pre-bid Conference. See 1815.407–70(d).

Subpart 1814.3—Submission of Bids

1814.302 Bid submission.

(NASA supplements paragraph (b))

(b) NASA contracting officers shall not consider telegraphic bids communicated by the telephone.

Subpart 1814.4—Opening of Bids and Award of Contract

1814.404 Rejection of bids.

1814.404–1 Cancellation of invitations after opening.

(NASA supplements paragraphs (c) and (e)).

(c) The authority to make the determination at FAR 14.404–1(c) is delegated to the contracting officer, except as provided in paragraph (e)(1) of this subsection.

(e)(1) A determination that includes an authorization to complete the acquisition through negotiation shall be made by the procurement officer, in consultation with the chief counsel.

1814.407 Mistakes in bids.

1814.407–3 Other mistakes disclosed before award.

(NASA supplements paragraph (e))

(e) Procurement officers are authorized to make the determinations under 14.407–3 (a), (b), (c) and (d).

1814.407–4 Mistakes after award.

(NASA supplements paragraph (d))

(d) Determinations shall be made by the procurement officer.

1814.408 Award.

1814.408–1 General.

(1) A notice of award as a specific document is used when the contracting officer needs to inform a responsible bidder that its offer was determined to be the most advantageous to the Government (considering only price and price-related factors) and that the formal award will be made upon satisfaction of specified pre-performance conditions.

(2) The notice of award is not a contractual instrument. It does not authorize the successful bidder to perform and, in itself, does not obligate the Government to award a contractual document. Its limited purpose is to provide: evidence of the Government's selection of the successful bidder; instruction to that bidder to satisfy specified pre-performance conditions; and a statement that the Government intends to award the contract to the successful bidder upon satisfaction of these conditions if a contract is awarded as a result of the invitation for bids.

(3) Use of a notice of award is optional. The contracting officer may issue the award document itself without first issuing a notice of award. However, there are instances when a notice of award should be considered, for example, in construction contracts where performance or payment bonds are required. In such cases, the most cost effective technique is to require only the successful bidder to provide the necessary bonds. The notice of award advises the successful bidder to provide the bonds, and it also serves as formal evidence from the Government of the impending award if such evidence is required to secure the bonds.

(4) The notice of award shall not be issued unless bids have been evaluated and a selection made, and a definitive contract document is ready for execution upon satisfaction of the conditions specified in the notice. Upon satisfaction of these conditions, the approved and executed contract instrument shall be provided to the successful bidder.

(5) Since the notice of award is not a contractual document authorizing performance, the period of performance of the resultant contract shall not be based on the date of issuance or receipt of the notice of award. The period of performance specified in the contract shall be based on some other reference point, such as the date the contract is provided to the successful bidder, a mutually agreeable effective date of a later authorization to proceed date.

(6) The notice of award can be issued by any formal written means such as a letter, telegram or electronic means. The notice should be substantially the same as the following format.

Format

Subject: Notice of Award—Invitation for Bids (IFB) (a). This notice is to advise you that your bid (b) in response to the subject IFB has been determined to be the most advantageous to the Government (considering only price and price-related factors). It is the Government's intention to award you a contract in the amount of (c) for this effort pending satisfaction of the following pre-performance conditions: (d)

Evidence (e) of satisfaction of these conditions must be provided to the contracting officer by (f). In the event these conditions are not satisfied by this date, the Government reserves the right to award the contract to the bidder who submitted the next most advantageous bid.

Please note that this notice of award is not a contractual document. It does not obligate the Government to award you, or any other bidder, a contract relative to the subject IFB, and it does not authorize you to proceed with contract performance or incur costs pursuant to such performance. Any costs incurred for contract performance prior to your receipt of a fully executed contract document are at your own risk and are not recoverable under any Government contract should the Government fail, for whatever reason, to award you a contract in response to the subject IFB.

If a contract is awarded after evidence of satisfaction of the pre-performance conditions listed above is provided to the contracting officer by the specified due date, the date of commencement of work will be provided with the formal award. This date will be based on (g).

Notes.—The contracting officer shall insert, where shown, the following information:

(a) Identification of the IFB by number and title.

(b) Identification of the contractor's bid.

(c) The award price.

(d) The preperformance conditions (e.g., any required payment and performance bonds).

(e) The evidence required to satisfy the pre-performance conditions (e.g., the actual payment and performance bonds).

(f) The date by which the evidence must be provided to the contracting officer.

(g) Identification of the date for commencement of performance. The period of performance of the contract shall not be based on the date of issuance or receipt of the notice of award. It shall be based on the date the contract is provided to the successful bidder, a mutually agreeable effective date, or a later authorization to proceed date.

PART 1828—BONDS AND INSURANCE

1828.202 [Added]

9. Section 1828.202 is revised to read as follows:

1828.202 Acceptability of corporate sureties.

(NASA supplements paragraph (a)).

(a) Contracting officers may obtain access to the Department of Treasury Circular 570 through the *Circular 570 Bulletin Board*, telephone (202) 874–7214. Use the following communications software specifications:

Baud rate	2400
Parity	None
No. of Data Bits	8
No. of Stop Bits	1
Duplex	Full

PART 1835—RESEARCH AND DEVELOPMENT CONTRACTING

1835.004 [Added]

10. Section 1835.004 is added to read as follows:

1835.004 Publicizing requirements and expanding research and development sources.

(NASA supplements paragraph (a))

(a) In R&D acquisitions over $100,000, when only three or fewer sources are known, the contracting officer shall have the requirements office query the Defense Technical Information Center (DTIC) IR&D Database to identify additional sources conducting IR&D in the area of the acquisition, in addition to using other market survey techniques. If needed, specific information on access to and use of the DTIC IR&D Database by a particular NASA installation may be obtained from that installation's designated IR&D focal point.

PART 1842—CONTRACT ADMINISTRATION

Subpart 1842.13—[Added]

11. Subpart 1842.13 is added to read as follows:

1842.13—Suspension of work, stop-work orders, and Government delay of work

1842.1305 Contract clauses.

(NASA supplements paragraph (b))

(b) FAR 52.242–15, Stop-Work Order, shall not be used in solicitations or contracts for research performed by educational or other nonprofit institutions.

PART 1852—SOLICITATION PROVISIONS AND CONTRACT CLAUSES.

1852.207–70 [Removed]

12.–13. Section 1852.207–70 is removed.

1852.210–70 [Redesignated]

1852.210–71, 1852.210–72, 1852.210–75 [Removed]

14.–15. Sections 1852.210–40, 1852.210–71, 1852.210–72 and 1852.210–75 are removed.

1852.211–70, 1852.211–72, 1852.211–74 [Added]

16. Sections 1852.211–70, 1852.211–72 and 1852.211–74 are added to read as follows:

1852.211–70 Brand name or equal.

As prescribed in 1811.104–71, insert the following provision:

Brand Name or Equal

(DECEMBER 1988)

(a) As used in this provision, ''brand name'' means identification of products by make and model. The term ''bid'' means ''offer'' if this is a negotiated acquisition.

(b) If items called for by this solicitation are identified in the Schedule by a ''brand name or equal'' description, that identification is intended to be descriptive, not restrictive, and is to indicate the quality and characteristics of products that will be satisfactory. Bids offering ''equal'' products, including products of the brand name manufacturer other than the one described by model designation, will be considered for award if the products are clearly identified in the bids and are determined by the Government to meet fully the salient characteristics requirements referenced in the solicitation.

(c) Unless the offeror clearly indicates in the bid that it is offering an ''equal'' product, the bid shall be considered as offering a brand-name product referenced in the solicitation.

(d) (1) If the offeror proposes to furnish an ''equal'' product, the brand name, if any, of the product to be furnished shall be inserted in the space provided in the solicitation, or that product shall be otherwise clearly identified in the bid. The evaluation of bids and the determination as to equality of the product offered shall be the responsibility of the Government and will be based on information furnished by the offeror or identified in its bid, as well as on other information reasonably available to the contracting activity.

(2) CAUTION TO OFFERORS: The contracting office is not responsible for locating or securing any information not identified in the bid and reasonably available to the contracting office. Accordingly, to ensure that sufficient information is available, the offeror must furnish as a part of its bid all descriptive material (such as cuts, illustrations, drawings, or other information) necessary for the contracting office to (i) determine whether the product offered meets the salient characteristics requirements of the solicitation and (ii) establish exactly what the offeror proposes to furnish and what the Government would be binding itself to purchase by making an award. The information furnished may include specific references to information previously furnished or to information otherwise available to the contracting office.

(3) If the offeror proposes to modify a product so as to make it conform to the requirements of the solicitation, it shall (i) include in the bid a clear description of the proposed modifications and (ii) clearly mark any descriptive material to show them.

(4) If this is a sealed bid acquisition, modifications proposed after bid opening to make a product conform to a brand name product referenced in the solicitation will not be considered.

(End of provision)

1852.211–72 Period of Performance.

As prescribed in 1811.403(a)(3), insert the following clause:

Period of Performance

(DECEMBER 1988)

The period of performance of this contract shall be [Insert period of performance dates].

(End of clause)

1852.211–74 Notice of Delay.

As prescribed at 1811.404–70(a), insert the following clause:

Notice of Delay

(DECEMBER 1988)

If, because of technical difficulties, the Contractor becomes unable to complete the contract work at the time specified, notwithstanding the exercise of good faith and diligent efforts in performing the work called for under this contract, the Contractor shall give the Contracting Officer written notice of the anticipated delay and the reasons for it. The notice and reasons shall be delivered promptly after the condition creating the anticipated delay becomes known to the Contractor but in no event less than 45 days before the completion date specified in this contract, unless otherwise permitted by the Contracting Officer. When notice is given, the Contracting Officer may extend the time specified in the Schedule for such period as is deemed advisable.

(End of clause)

1852.212–70 [Redesignated]

1852.212–72, 1852.212–73 [Removed]

17.–18. Sections 1852.212–72 and 1852.212–73 are removed.

1852.212–74 [Redesignated]

1852.214–70, 1852–214–71, 1852.214–72 [Amended]

19.–20. Sections 1852.214–70, 1852.214–71, and 1852–214.72 are revised to read as follows:

1852.214–70 Caution to Offerors Furnishing Descriptive Literature.

As prescribed in 1814.201–670(a), insert the following provision:

Caution to Offerors Furnishing

Descriptive Literature

(DECEMBER 1988)

Bidders are cautioned against furnishing as a part of their bids descriptive literature that includes language reserving to the bidder the right to deviate from the requirements of the invitation for bids. Statements that ''Data are subject to change without notice,'' ''Prices subject to change without notice,'' or words having a similar effect are examples of such reservation. The Government will reject as nonresponsive any bid that incorporates literature containing such language or any bid that must be evaluated by using literature containing such language. Bidders should clearly label any submissions of descriptive literature not intended to form a part of a bid as such in order to preclude any need for the Government to interpret the bidder's intent in submitting descriptive literature. [See FAR 14.202–5.]

(End of provision)

1852.214–71 Grouping for Aggregate Award.

As prescribed in 1814.201–670(c), insert the following provision:

Grouping for Aggregate Award

(MARCH 1989)

(a) The Government will evaluate offers and make award on a basis of the aggregate offers for items

Insert the item numbers and/or descriptions].

The Government will not consider an offer for quantities less than those specified for these items.

(b) If this is an invitation for bids, the Government will reject as nonresponsive a bid that is not made on the total quantities for all of the items specified in paragraph (a) of this section.

(End of provision)

1852.214–72 Full Quantities.

As prescribed in 1814.201–670(b), insert the following provision:

FULL QUANTITIES

(DECEMBER 1988)

The Government will not consider an offer for quantities of items less than those specified. If this is an invitation for bids, the Government will reject as nonresponsive a bid that is not made on full quantities.

(End of provision)

PART 1871—MIDRANGE PROCUREMENT PROCEDURES

1871.103 [Amended]

21. Paragraph (b) to section 1871.103 is revised to read as follows:

1871.103 Applicability.

(a) * * *

(b) This part applies to all contract actions the aggregate amount of which is greater than the simplified acquisition threshold (SAT) (FAR part 13) and not more than $1,000,000 in basic value and for commercial items regardless of dollar value to the extent consistent and compliant with FAR part 12 and part 1812 (see 1812.102(c)). For service contracts, up to four annual options of not more than $1,000,000 each are permitted where the option requirements are substantially the same as the basic requirement. For R&D contracts, options are permitted not to exceed $1,000,000 in total value (basic contract plus options). For supply contracts, four options of not more than $1,000,000 each are permitted when not more than $1,000,000 in funding is to be required in any fiscal year. The total amount of the basic award plus options may not exceed $5,000,000 in either the case of supplies or services except as provided in paragraph (c) of this section. For commercial item contracts, options are permitted regardless of dollar value.

* * * * *

1871.401–6 [Amended]

22. In section 1871.401–6, paragraph (a)(2) is revised to read as follows:

1871.206–1 Commercial Items.

(a) Policy.

(1) * * *

(2) MidRange Procedures may be used for commercial item procurements to the extent consistent and compliant with FAR part 12 and part 1812 (see 1812.102(c)).

* * * * *

[FR Doc. 96–22234 Filed 9–5–96; 8:45 a.m]

BILLING CODE 7510–01–M

---

48 CFR Parts 1845, 1852 and 1853

Revision to NASA FAR Supplement Coverage on Government Property

AGENCY: Office of Procurement, Contract Management Division, National Aeronautics and Space Administration (NASA).

ACTION: Final rule.

SUMMARY: This is a final rule amending the NASA FAR Supplement to incorporate changes pertaining to government property reporting by contractors. The intent of this rule is to improve the completeness, accuracy and timeliness of the reporting process.

EFFECTIVE DATE: September 6, 1996.

FOR FURTHER INFORMATION CONTACT: Larry G. Pendleton, (202) 358–0487.

SUPPLEMENTARY INFORMATION:

Background

Recent experience at NASA in preparing and auditing annual financial statements as required by the Chief Financial Officer's (CFO) Act has led to the need for changes in the contract property reporting process to improve the completeness, accuracy and timeliness of information received. NASA does not maintain detailed records of government property in the possession of contractors. Pursuant to the Federal Acquisition regulation (FAR) 45.505 the contractor's property control records constitute the Government's official property records. All NASA contracts, under which the contractor is accountable for government property, are required to contain a provision that specifies the annual submission of a report containing summary financial and property information on the property in the contractor's custody. Therefore, when agency requirements for financial/property management information change, they must be implemented by NASA contractors in possession of government property. In formulating the rule, NASA objectives have been to streamline the report to obtain only information necessary to report on and conduct oversight of contractor held property, and to generally minimize the impact on reporting entities.

Summary of Substantive Comments

One comment objected to the inclusion of data on costs for construction-in-progress and work-in-process on the grounds that such requirements are inappropriate in a property reporting system, and that the information is not currently available from contractor property records. This data is necessary for NASA to comply with Office of Management and Budget (OMB) guidance on the form and content of federal agency financial statements, and with the forthcoming accounting standard on property, plant, and equipment to be issued by the Federal Accounting Standards Advisory Board (FASAB). NASA Form (NF) 1018 is a financial report about government property in the possession of contractors. Therefore, contractors may be required to extract financial information from other contractor record systems instead of exclusive reliance on existing property systems for needed information. The commenter acknowledged that the required information is available from other contractor records. In addition, contractors are required by FAR 45.505(b) to provide financial accounts

in their property control systems for government-owned property in their possession or control. The order of property classification accounts on NF 1018 has been changed as suggested by public comment to group real property accounts together.

Another comment objected to NF 1018 Item 19, Type of Deletion as requiring major property record system changes in order to furnish this level of detail. This category is new in name only, currently being categorized as Disposals on the present form. Detailed lists of information about these disposals are now required to be maintained by contractors in the event they are needed by NASA organizations. Replacing Disposals with Type of Deletion will generate no new information requirements for contractors, and will make reporting more complete, accurate, and comparable among contractors by standardizing the way in which deletion types are provided to the government. However, as recommended by the commenter, the types of deletions have been rearranged, two types have been combined, and three have been deleted since they are part of the plant clearance process.

There was objection in one comment to a proposed requirement that property shipped to others remain on the shipping contractor's accountable records until evidence of receipt is obtained from the consignee. The comment pointed out that receiving contractors do not normally acknowledge receipt, and that issues of liability, taxable location, and new suspense systems were raised by the proposed requirement. While NASA does not agree that all of the issues raised by the comment are valid, there are acknowledged difficulties in tracking items assigned to a carrier for shipment. The objective sought by the proposed arrangement is clear and consistent accountability for government property at all times. Based upon the concerns expressed in the comment, the final rule will be changed to provide that property in transit during the month of September of each year shall be reported by the shipping contractor, unless confirmation of receipt at destination has been obtained.

Objection was made in another comment to the revised contract clause that provides for possible withholding of payment on invoices when required property reports are not submitted when due. Prompt receipt of these reports is critical to NASA's ability to prepare annual financial reports, obtain audit review, and publish them when due as required by law. Submission of property reports when required is a contractual obligation resulting from a specific provision in each affected contract with which contractors have agreed by executing the contract. However, in response to the concerns expressed in the comment, the final rule limits possible withholding to a total of $25,000 or 5 percent of the amount of the contract, whichever is less. In addition, explanatory language has been added to the prescription for the clause making clear the importance of timely report submission and encouraging efforts to obtain reports by the due date rather than using the withholding authority.

Another comment noted that there is an effort underway to develop a standard, government-wide property report and recommends that NASA delay consideration of this rule pending the results of that effort. Alternatively, the commenter recommends a public hearing to address its comments. NASA is represented on the interagency group that is rewriting FAR Part 45, and the subgroup considering a government standard form. It is not known when these groups will complete their work and revise the relevant regulations. The revisions contained in the proposed rule must be made without further delay to allow NASA to fulfill its financial management obligations. Public comment on the proposed rule was received from only one organization. Due to this low level of expressed interest, a public hearing will not be scheduled.

Procedural Requirements

Review Under the Regulatory Flexibility Act

This rule was reviewed under the Regulatory Flexibility Act of 1980. The rule revises the former regulation by simplifying and reducing reporting requirements, the costs of which are in any case reimbursed by the Government. NASA certifies that the rule will not have a significant economic impact on a substantial number of small entities.

Review Under the Paperwork Reduction Act

Under 5 CFR 1320.5(b)(2)(i), NASA is required to inform potential persons who are to respond to the collection of information that such persons are not required to respond to the collection of information unless it displays a currently valid OMB control number. Under 5 CFR 1320.5(b)(2)(ii)(C), this paragraph meets that display requirement by providing the following statement: Information collection associated with this rule has been approved under OMB Control Number(s) 2700–0017 with an expiration date of 12/31/98. This information collection, as revised, represents a reduction in the estimated paperwork burden to respondents from the present reporting requirements. The reporting format has been reduced from 4 pages to 2, and has been streamlined to facilitate preparation and to clarify reporting requirements. Completion of the information collection merely requires contractors to transcribe data from existing contractor records onto the report.

List of Subjects in 48 CFR Parts 1845, 1852 and 1853

Government procurement.

Tom Luedtke,

Deputy Associate Administrator for Procurement.

Accordingly, 48 CFR Parts 1845, 1852, and 1853 are amended as follows:

1. The authority citation for 48 CFR Parts 1845, 1852, and 1853 continues to read as follows:

Authority: 42 U.S.C. 2473(c)(1).

PART 1845—GOVERNMENT PROPERTY

2. Section 1845.102–70(a)(3) is revised to read as follows:

1845.102–70 Procedures.

(a) * * *

(3) Requirement that additional facilities that the offeror requests to be provided by the Government be described and identified by classification such as ''Land'', ''Buildings'', and ''Equipment'' (see subpart 1845.71); and

* * * * *

1845.106–70 [Amended]

3. In section 1845.106–70, paragraph (d) is revised to read as follows, paragraph (i) is removed and paragraphs (j) and (k) are redesignated as paragraphs (i) and (j):

1845.106–70 NASA contract clauses and solicitation provision.

* * * * *

(d)(1) The contracting officer shall insert the clause at 1852.245–73, Financial Reporting of NASA Property in the Custody of Contractors, in all cost reimbursement contracts. It shall be included in all other types of contracts when it is known at the time of award that property will be provided to the contractor or that the contractor will acquire property, title to which will vest in the Government prior to delivery of the contract products. Where all

property to be provided is subject to the clause at 1852.245–71, Installation-Provided Government Property (see paragraph (b) of this section), the clause at 1852.245–73 is not required. Where the clause is not included in contracts at the time of award, if Government property is subsequently provided to a contractor, or the contractor is authorized to acquire property to which the Government takes title, the clause shall be included in the contract at that time.

(2) Paragraph (c) of the clause at 1852.245–73 permits the contracting officer to withhold payments, up to a specified dollar limit, in the event a contractor fails to submit the annual NF 1018 by the due date. This provision reflects the importance to NASA of receiving this financial data on time. Upon receipt, the information is entered into the NASA accounting system and is used in the preparation of agency annual financial statements. Therefore, timely receipt of contractor held property financial data is essential to the process. A concerted effort should be made to obtain NF 1018 reports by the due date before resorting to the payment withholding alternative.

* * * * *

1845.301 [Amended]

4. In section 1845.301, the definition heading ''Space property'' is revised to read ''Agency-peculiar property''.

1845.407 [Amended]

5. In section 1845.407, the section heading ''Non-Government use of plant equipment'' is revised to read ''Non-Government use of equipment''.

6. In the introductory text to section 1845.407, the phrase ''plant equipment'' is revised to read ''equipment''.

7. In paragraphs (a) (1) and (b) to section 1845.407, the phrase ''plant equipment'' is revised to read ''equipment''.

1845.501 [Amended]

8. In section 1845.501, in the definition of ''Space property'', the heading ''Space property'' is revised to read ''Agency-peculiar property'', the phrase ''property peculiar to NASA'' is revised to read ''property unique to NASA'', and the last sentence is removed.

9. In section 1845.501, in the definition ''Centrally reportable equipment (CRE)'', the phrase ''space property'' is revised to read ''agency-peculiar property''

1845.502–1 [Amended]

10. In section 1845.502–1, the title of the NASA Form 1018 ''Report of Government-Owned/Contractor-Held Property'' is revised to read ''NASA Property in the Custody of Contractors''.

1845.502–71 [Amended]

11. In paragraph (e) to section 1845.502–71, the heading ''Space Property'' is revised to read ''Agency-peculiar property''.

12. Section 1845.505–14 is revised to read as follows:

1845.505–14 Reports of Government property.

When required by the contract, the contractor shall submit a report of NASA Property in the Custody of Contractors, NASA Form 1018, in accordance with the instructions on the form, in subpart 1845.71, and the contract clause at 1852.245–73. Contractor property control systems shall distinguish between Government furnished and contractor acquired property classification shown in FAR 45.505–14(a) (1) through (5).

1845.7101 [Amended]

13. In 1845.7101 the last sentence is removed and the following three sentences are added to read as follows:

* * * This report provides information for NASA financial statements and property management; accuracy and timeliness of the report are, therefore, very important. Contractors shall retain documents which support the data reported on NF 1018 in accordance with FAR subpart 4.7, Contractor Records Retention. Classifications of property, related costs to be reported, and reporting requirements are set forth in this subpart.

14. Sections 1845.7101–1, 1845.7101–2, 1845.7101–3, 1845.7101–4 and 1845.7101–5 are revised to read as follows:

1845.7101–1 Property classification.

(a) Contractors shall report costs in the classifications required on NF 1018, as described in this section. For Land, Buildings, Other Structures and Facilities, and Leasehold Improvements, contractors shall report the amount for all items with a unit cost of $5,000 or more and useful life of 2 years or more. For Plant Equipment, Special Tooling, Special Test Equipment and Agency-Peculiar Property, Contractors shall separately report—

(1) The amount for all items with a unit cost of $5,000 or more and a useful life of 2 years or more, and

(2) All times under $5,000, regardless of useful life.

(b) Contractors shall report the amount for all Materials, regardless of unit cost.

(c) Land. Includes costs of land, improvements to land, and associated costs incidental to acquiring and preparing land for use, for example; appraisal fees, clearing costs, drainage, grading, landscaping, plats and surveys, removal and relocation of the property of others as part of a land purchase, removal or destruction of structures or facilities purchased but not used, and legal expenses.

(d) Buildings. Includes costs of buildings, improvements to buildings, and fixed equipment required for the operation of a building which is permanently attached to and a part of the building and cannot be removed without cutting into the walls, ceilings, or floors. Examples of fixed equipment required for the functioning of a building include plumbing, heating and lighting equipment, elevators, central air conditioning systems, and built-in safes and vaults.

(e) Other structures and facilities. Includes costs of acquisitions and improvements of structures and facilities other than buildings; for example, airfield pavements, harbor and port facilities, power production facilities and distribution systems, reclamation and irrigation facilities, flood control and navigation aids, utility systems (heating, sewage, water and electrical) when they serve several buildings or structures, communication systems, traffic aids, roads and bridges, railroads, monuments and memorials, and nonstructural improvements, such as sidewalks, parking areas, and fences.

(f) Leasehold improvements. Includes costs of improvements to leased buildings, structures, and facilities, as well as easements and right-of-way, where NASA is the lessee or the cost is charged to a NASA contract.

(g) Equipment. Includes costs of commercially available personal property for use in manufacturing supplies, performing services, or any general or administrative purpose; for example, machine tools, furniture, vehicles, computers, accessory or auxiliary items, and test equipment.

(h) Construction in progress. Includes costs for work in process for the construction of Buildings, Other Structures and Facilities, and Leasehold Improvements to which NASA has title.

(i) Special tooling. Includes costs of equipment and manufacturing aids (and components and replacements of these items) that are of such a specialized nature that, without substantial modification or alteration, their use is limited to the development or production of particular supplies or parts, or to the performance of particular services. Examples include jigs, dies,

fixtures, molds, patterns, taps and gauges.

(j) Special test equipment. Includes costs of equipment used to accomplish special purpose testing in performing a contract, and items or assemblies of equipment.

(k) Material. Includes costs of NASA owned property held in inventory that may become a part of an end item or be expended in performing a contract. Examples include raw and processed material, parts, assemblies, small tools and supplies. Does not include material that is part of work in process.

(l) Agency-peculiar property. Includes actual or estimated costs of completed items, systems and subsystems, spare parts and components unique to NASA aeronautical and space programs. Examples include aircraft, engines, satellites, instruments, rockets, prototypes and mock-ups. The amount of property, title to which vests in the Government as a result of progress payments to fixed price subcontractors, shall be included to reflect the pro rata cost of undelivered agency-peculiar property.

(m) Contract work-in-process. Includes the costs of all work-in-process and excludes the costs of completed items reported in other categories.

1845.7101–2 Transfers of property.

The procedures in this section apply to all types of transfers. Only Government installations may furnish Government property to a contractor. Therefore, procurement, property, and financial organizations at NASA Centers must effect all transfers of accountability, although physical shipment and receipt of property may be made directly by contractors. Such transfers include shipments between contractors of the same installation, contractors of different installations, a contractor of one installation to another installation, an installation to a contractor of another installation, and a contractor to another Government agency or its contractor. So that NASA may properly control and account for transfers, they shall be adequately documented. The procedures described in this section shall be followed in all cases, to provide an administrative and audit trail, even if property is physically shipped directly from one contractor to another. Property shipped between September 1 and September 30, inclusively, shall be reported by the shipping contractor, regardless of the method of shipment, unless written evidence of receipt at destination has been received. Property provided under fixed price repair contracts remains accountable to the cognizant NASA Center and is not reportable on NF 1018; property provided for repair under a cost-reimbursement contract, however, is accountable to the contractor and reportable on NF 1018.

(a) Approval and notification. The contractor must obtain the approval of the contracting officer or designee for transfers of property before shipment. Each shipping document must contain contract numbers, shipping references, property classifications in which the items are recorded, unit prices, and any other appropriate identifying or descriptive data. Unit prices shall be obtained from records maintained pursuant to FAR part 45 and part 1845 of this chapter. Shipping contractors shall furnish a copy of the shipping document to the cognizant property administrator. Shipping and receiving contractors shall promptly notify the financial management office of the NASA Center responsible for their respective contracts when accountability for Government property is transferred to, or received from, other contracts, contractors, NASA Centers or Government agencies. Copies of shipping or receiving documents will suffice as notification in most instances.

(b) Reclassification. If property is transferred to another contract or contractor, the receiving contractor shall record the property in the same property classification and amount appearing on the shipping document. For example, when a contractor receives an item from another contractor that is identified on the shipping document as equipment, but that the recipient intends to incorporate into special test equipment, the recipient shall first record the item in the equipment account and subsequently reclassify it as special test equipment. Reclassification of equipment, special tooling, special test equipment, or agency-peculiar property requires prior approval of the contracting officer or a designee.

(c) Incomplete documentation. If contractors receive transfer documents having insufficient detail to properly record the transfer (e.g., omission of property classification, unit prices, etc.) they shall request the omitted data directly from the shipping contractor or through the property administrator as provided in FAR 45.505–2.

1845.7101–3 Computing costs of fabricated special tooling, special test equipment, agency-peculiar property and contract work in process.

(a) Costs shall be computed in accordance with accepted accounting principles, be reasonably accurate, and be the product of any one or a combination of, the following:

(1) Abstracts of cost data from contractor property or financial records.

(2) Computations based on engineering and financial data.

(3) Estimates based on NASA Form 533 reports.

(4) Formula procedures (e.g., using a 50 percent factor for work in process items, on the basis of updated Standard Form 1411 estimates or the contractor's approved estimating and pricing system).

(5) Other approved methods.

(b) Contractors shall report costs using records that are part of the prescribed property or financial control system as provided in this section. Fabrication costs shall be based on approved systems or procedures and shall include all direct and indirect costs of fabricating Government property.

(c) The contractor shall redetermine the costs of items returned for modification or rehabilitation.

(d) The computation of work in process shall include the costs of associated systems, subsystems, and spare parts and components furnished or acquired and charged to work in process pending incorporation into a finished item. These types of items make up what is sometimes called production inventory and include programmed extra units to cover replacement during the fabrication process (production spares). Also included are deliverable items on which the contractor or a subcontractor has begun work, and materials that have been issued from inventory.

1845.7101–4 Type of deletion.

Contractors shall report the types of deletions from contract property records as described in this section.

(a) Adjusted. Changes in the deletion amounts, if any, that result from mathematical errors in the previous report.

(b) Lost, damaged or destroyed. Deletion amounts as a result of relief from responsibility under FAR 45.503 granted during the reporting period.

(c) Transferred in place. Deletion amounts that result from a transfer of property to a follow-on contract with the same contractor.

(d) Transferred to center accountability. Deletion amounts that result from transfer of accountability to the NASA Center responsible for the contract, whether or not the items are physically moved.

(e) Transferred to another NASA Center. Deletion amounts caused by transfer of accountability to NASA Center other than the one responsible for the contract, whether or not the items are physically moved.

(f) Transferred to another Government agency. Deletion amounts that result from transfer of property to another Government agency.

(g) Purchased at cost/returned for credit. Deletion amounts due to contractor purchase or retention of contractor acquired property as provided in FAR 45.605–1; or to contractor returns to suppliers under FAR 45.605–2.

(h) Disposal through plant clearance process. Deletions other than transfers; i.e., donations to eligible recipients, sold at less than cost, or abandoned/directed destruction.

1845.7101–5 Contractor's privileged financial and business information.

If a transfer of property between contractors will involve disclosing costs of a proprietary nature, the contractor shall furnish unit prices only on those copies of the shipping documents that are sent to the shipping and receiving NASA installations. Transfer of the property to the receiving contractor shall be on a no-cost basis.

1845.7101–6 [Redesignated]

1845.7101–7, 1845.7101–8, 1845.7101–9 [Removed]

15.–16. Sections 1845.7101–7, 1845.7101–8, and 1845.7101–9 are removed.

1845.7101–10 [Redesignated]

PART 1852—SOLICITATION PROVISIONS AND CONTRACT CLAUSES

17.–18. Section 1852.245–73 is revised to read as follows:

1852.245–73 Financial reporting of NASA property in the custody of contractors.

As prescribed in 1845.106–70(d), insert the following clause:

Financial Reporting of NASA Property in the Custody of Contractors

Sept. 1996

(a) The Contractor shall submit annually a NASA Form (NF) 1018, NASA Property in the Custody of Contractors, in accordance with 1845.505–14, the instructions on the form, and subpart 1845.71. Subcontractor use of NF 1018 is not required by this clause; however, the contractor shall include data on property in the possession of subcontractors in the annual NF 1018.

(b) If administration of this contract has been delegated to the Department of Defense, the original of NASA Form 1018 shall be submitted to the NASA installation Financial Management Officer and three copies shall be sent concurrently through the DOD Property Administrator to the NASA office identified below. If the contract is administered to NASA, the original of NF 1018 shall be submitted to the installation Financial Management Officer, and three copies shall be sent concurrently to the following NASA office:

(Insert the address and office code of the organization within the cognizant NASA installation.)

(c) The annual reporting period shall be from October 1 of each year through September 30 of the following year. The report shall be submitted in time to be received by October 31. The information contained in these reports is entered into the NASA accounting system to reflect current asset values for agency financial statement purposes. Therefore, it is essential that required reports be received no later than October 31. The Contracting Officer may, in the Government's interest, withhold payment until a reserve not exceeding $25,000 or 5 percent of the amount of the contract, whichever is less, has been set aside, if the Contractor fails to submit annual NF 1018 reports when due. Such reserve shall be withheld until the Contracting Officer has determined that the required reports have been received by the Government. The withholding of any amount or the subsequent payment thereof shall not be construed as a waiver of any Government right.

(d) A final report is required within 30 days after disposition of all property subject to reporting when the contract performance period is complete.

(End of clause)

1852.245–78 [Removed]

19. Section 1852.245–78 is removed.

PART 1853—FORMS

20. Section 1853.245(a) is revised to read as follows:

1853.245 Property (NASA Form 1018, Department of Defense Form 1342, and Department of Defense Form 1419).

(a) NASA Form 1018, NASA Property in the Custody of Contractors. NASA Form 1018, prescribed at 1845.505–14, shall be used by contractors for reporting Government-owned property.

* * * * *

[FR Doc. 96–22372 Filed 9–5–96; 8:45 am]

BILLING CODE 7510–01–M

DEPARTMENT OF TRANSPORTATION

National Highway Traffic Safety Administration

49 CFR Part 571

[Docket No. 93–02; Notice 14]

RIN 2127–AF14

Federal Motor Vehicle Safety Standards; Compressed Natural Gas Fuel Container Integrity

AGENCY: National Highway Traffic Safety Administration (NHTSA), Department of Transportation (DOT).

ACTION: Final rule, petitions for reconsideration.

SUMMARY: In response to petitions for reconsideration, this document amends certain labeling requirements in Standard No. 304, *Compressed Natural Gas Fuel Container Integrity*. Specifically, this document modifies the labeling requirements with respect to the inspection interval and deletes reference to certain pamphlets. The amendments harmonize Standard No. 304 with voluntary industry and international standards, without any detriment to safety.

DATES: *Effective date:* The amendment in this document becomes effective December 2, 1996. Prior to December 2, 1996, a manufacturer is not required to comply with S7.4(g), which specifies a labeling requirement regarding container inspections and the appropriate interval between them.

Petitions for reconsideration: Any petition for reconsideration of this rule must be received by NHTSA no later than October 21, 1996.

ADDRESSES: Petitions for reconsideration of this rule should refer to the above mentioned docket number and be submitted to: Administrator, National Highway Traffic Safety Administration, 400 Seventh Street, SW., Washington, DC 20590.

FOR FURTHER INFORMATION CONTACT:

For non legal issues: Mr. Charles Hott, National Highway Traffic Safety Administration, 400 Seventh Street, SW., Washington, DC 20590 (Telephone 202–366–0247).

For legal issues: Mr. Marvin L. Shaw, NCC–20, Rulemaking Division, Office of Chief Counsel, National Highway Traffic Safety Administration, 400 Seventh Street, SW., Washington, DC 20590 (202–366–2992).

SUPPLEMENTARY INFORMATION:

I. Regulatory Background

On September 26, 1994, NHTSA published a final rule establishing Standard No. 304, *Compressed Natural Gas Fuel Container Integrity*. (59 FR 49021) In addition to container performance requirements, the Standard also specifies labeling requirements. Each CNG container manufacturer must permanently label each of its containers with the following information: (1) The statement that ''If there is a question about the proper use, installation, or maintenance of this container, contact [*CNG fuel container manufacturer's name, address, and telephone number*]''; (2) the month and year in which the container was manufactured;

(3) the maximum service pressure; and (4) the symbol ''DOT,'' which represents the manufacturer's certification that the container complies with all the standard's requirements. Manufacturers have been required to label each CNG container manufactured on and after March 26, 1995, with this information.

On November 24, 1995, NHTSA published a final rule that amended S7.4 of Standard No. 304 to require CNG containers to be labeled with the following additional information:

(1) The container designation (Type 1, 2, 3, or 4),

(2) The statement ''CNG ONLY,''

(3) The statement: ''This container should be visually inspected after a motor vehicle accident or fire and at least every 12 months for damage and deterioration in accordance with the Compressed Gas Association (CGA) guidelines C–6 and C–6.1 for Type 1 containers and C–6.2 for Types 2, 3, and 4 containers.''

(4) The statement: ''Do Not Use After _____,'' inserting the year that is the 15th year beginning after the year in which the container is manufactured.

(60 FR 57943)

In that final rule, NHTSA also amended the bonfire test requirements that evaluate pressure release and announced its decision to terminate rulemaking about additional performance requirements for CNG containers that the agency had proposed.

NHTSA received petitions for reconsideration from the American Automobile Manufacturers Association (AAMA), Ford, Consumers Gas, Powertech (a research and development laboratory), and CNG container manufacturers, including NGV Systems, Pressed Steel Tank (PST), and Lincoln Composites (Lincoln).

The petitioners requested changes to the labeling requirements and the bonfire test requirements in Standard No. 304. In today's final rule, the agency responds to issues associated with the labeling of CNG containers. The agency will respond to the petitions addressing the bonfire test at a later date. The agency believes that it is appropriate to respond to the petitions in two separate notices, given the need to provide guidance to manufacturers attempting to comply with the September 1, 1996 effective date for the labeling of new CNG containers.

II. Agency Decision on Container Labeling

A. Inspection Interval

NHTSA stated that a one-year interval for visual inspection of a container's exterior reduces the possibility that damage caused by external factors would go undetected, a situation that could lead to container failure. Among the external factors that can damage a container are scratches and gouges and exposure to caustic substances and fluids such as acid, road salt, and gasoline. The agency based this earlier decision on a NGVC document recommending a one year inspection interval.[1]

NHTSA received several petitions for reconsideration requesting that the container inspection interval be every 36 months instead of every 12 months. Lincoln, Powertech, PST, AAMA, Consumers Gas, and Ford believed that a 12-month inspection period was inappropriate. Lincoln, Powertech, PST, and AAMA stated that the soon-to-be-issued updated NGV standard recommended a 36-month inspection interval. These petitioners further stated that a 36-month inspection interval is specified in the Canadian standard and the draft ISO standard.

Consumers Gas stated that it has been operating natural gas powered vehicles for over ten years and have not had a problem with the integrity of vehicle containers. It visually inspects its containers every three years. The company believes that more frequent inspection would increase the possibility of damaging a container because the container must be removed from the vehicle for a thorough inspection. It also believed that an annual inspection would increase the risk of reducing the environmental coating on the outside of the container. Consumers Gas was also concerned about the costs associated with inspecting CNG fuel containers annually.

Powertech stated that all international inspection standards specify a 36-month interval between inspections. Based on its review of in-service ruptures of CNG containers since 1974, that company stated these failures would not have been prevented had a one year visual inspection been used.

Lincoln stated that its recently completed 12-month inspection program on 96 CNG vehicles in the Atlanta area showed no indication of unexpected damage[2] to the CNG fuel containers. Based on this field experience, Lincoln concluded that a 12-month inspection interval would provide little safety benefit. Lincoln favored the adoption of a 36-month, 36,000 mile inspection requirement which would harmonize the U.S. requirement with the requirements of other standard-setting countries and organizations. Lincoln stated that a 12-month inspection requirement would not have prevented the two publicized container failures involving two different GM trucks because, in each case, the truck's container had sustained damage prior to installation.

AAMA stated that the 12-month interval for visual inspection requirement is inconsistent with other CNG container inspection requirements. That organization requested that the interval be revised to every 36 months or after an accident or fire for external damage and deterioration.

PST stated that the inspection interval should be 36-months with the manufacturer having the option of specifying shorter intervals based on the design and construction of the container.

Based on the available information, NHTSA has decided to amend S7.4 to require that each CNG container be visually inspected for damage or deterioration after a motor vehicle accident or fire and at least every 36 months or 36,000 miles, whichever comes first. Among the factors that can damage a container are scratches and gouges and exposure to caustic substances and fluids such as acid, road salt, and gasoline. The agency notes that the new inspection schedule is consistent with international and industry standards. Based on the comments, the agency believes that a 12-month, 12,000 mile inspection interval would provide little safety benefit to the vehicle owners. While visual inspection of a CNG container may detect some conditions that indicate a potential failure, the agency agrees with the petitioners that a 12 month, 12,000 mile inspection interval would be excessive. The agency notes that a 12-month inspection interval would not have prevented the two publicized GM container failures because they were caused by stress corrosion cracking which is internal to the container and therefore would not have been identifiable during a visual inspection of the container's exterior.

B. Inspection Pamphlets

In the November 1995 final rule, NHTSA stated that the regulation must reference inspection information about the in-use safety of CNG containers. The agency further stated that the current CGA pamphlets provide valuable inspection information to help assure

[1] NGVC is currently redrafting the voluntary industry standard to specify a 36 month inspection interval.

[2] Lincoln did not explain what it meant by the phrase ''unexpected damage.''

fuel container safety for Type 1, 2, and 3 containers.

PST and AAMA stated that referencing the CNG pamphlets on the container label is confusing and not beneficial. PST stated that a container's label should refer only to those CGA pamphlets that are relevant to that specific container. For example, a reference to pamphlet C–6.1 on a steel container could be confusing since that pamphlet is for aluminum containers. AAMA stated that the inspection procedures referenced in the pamphlets include inspections, such as interior and hydrostatic testing, that necessitate the removal of the CNG containers from the vehicle, and the use of specialized test equipment and personnel. AAMA stated that such testing is not needed to conduct a visual inspection, like the one specified by the CNG container label.

After further analyzing the available information, NHTSA has decided that it is inappropriate at this time to require reference to any of the CGA pamphlets on the container's label. As AAMA stated, it would be difficult for users to comply with the requirements in these pamphlets which direct an inspector to remove a CNG container. The agency further agrees with AAMA that the inspection procedures referenced in the CGA pamphlets may be confusing to a mechanic because it specifies that the CNG container be inspected by a container tester registered with the U.S. Department of Transportation or Canadian Transport Commission. NHTSA notes that the CNG container industry is in the process of revising the inspection pamphlets to clarify the reinspection interval for CNG containers used as vehicle fuel tanks.

C. Other Issues

PST stated that the minimum character size for the label should be reduced to 5⁄32 inch because the added wording regarding the recommended periodic inspection of fuel containers would increase the label's size. PST stated that there is no functional need for the label to be legible for distances greater than a few feet. PST stated that larger labels are more costly and more difficult to apply on a CNG container, and that a smaller label can more easily conform to the surface for adhesion.

Lincoln does not agree that the cost of this rulemaking is solely the cost of the label. That manufacturer stated that the rulemaking's true cost should reflect the costs of implementing the change from a 36-month to 12-month inspection interval and that this would make this rulemaking significant.

NHTSA notes that the letter height requirements were addressed in the final rule published July 24, 1995. In that rulemaking, the agency changed the letter height requirement from 12.7 mm (0.50 inch) to 6.35 mm (0.25 inch) which was consistent with the comments from Chrysler and Structural Composite Industries. The agency stated in that rulemaking that it would be inappropriate to reduce the letter height even more because the lettering would be too small to be visible at various locations on CNG vehicles. The agency notes that these issues have already been addressed in both the July 24, 1995 final rule and in the November 24, 1995 final rule. Since PST did not provide any new information on label content or the letter height requirement to justify a change, NHTSA is not making any change.

NHTSA notes that today's amendment of Standard No. 304 with respect to the labeling requirement render moot Lincoln's concerns about the added costs associated with an annual inspection interval.

III. Rulemaking Analyses and Notices

A. Executive Order 12866 (Federal Regulation) and DOT Regulatory Policies and Procedures

NHTSA has considered the impact of this rulemaking action under Executive Order 12866 and the Department of Transportation's regulatory policies and procedures. This rulemaking document was not reviewed under E.O. 12866, ''Regulatory Planning and Review.'' Further, this action has been determined to be ''nonsignificant'' under the Department of Transportation's regulatory policies and procedures. The agency has not prepared a Final Regulatory Evaluation (FRE) because the impacts of these amendments are so minimal as not to warrant preparation of a full regulatory evaluation. The amendments made in today's final rule are requirements related to the labeling of CNG vehicles and containers, and as such do not result in significant increases in cost. In the FRE for Standard No. 304, the agency stated ''The consumer cost for a label on each CNG fuel container certifying that the container meets the proposed equipment requirements is estimated to be in the range of $0.06 to $0.11 per label. This includes the cost of the label plus labor costs for attachment.'' The changes made by this final rule do not change that estimate.

B. Regulatory Flexibility Act

NHTSA has also considered the effects of this rulemaking action under the Regulatory Flexibility Act. Based upon the agency's evaluation, I certify that this rule will not have a significant economic impact on a substantial number of small entities. As noted above, the amendments will result in only a very nominal cost increase resulting from adding the additional labeling information. Further, information available to the agency indicates that businesses manufacturing CNG fuel containers are not small businesses.

C. Executive Order 12612 (Federalism)

NHTSA has analyzed this rulemaking action in accordance with the principles and criteria contained in Executive Order 12612. NHTSA has determined that the rule will not have sufficient Federalism implications to warrant the preparation of a Federalism Assessment.

D. National Environmental Policy Act

In accordance with the National Environmental Policy Act of 1969, NHTSA has considered the environmental impacts of this rule. The agency has determined that this rule will have no adverse impact on the quality of the human environment.

E. Civil Justice Reform

This rulemaking does not have any retroactive effect. Under 49 U.S.C. 30103, whenever a Federal motor vehicle safety standard is in effect, a State may not adopt or maintain a safety standard applicable to the same aspect of performance which is not identical to the Federal standard, except to the extent that the State requirement imposes a higher level of performance and applies only to vehicles procured for the State's use. 49 U.S.C. 30161 sets forth a procedure for judicial review of final rules establishing, amending or revoking Federal motor vehicle safety standards. That section does not require submission of a petition for reconsideration or other administrative proceedings before parties may file suit in court.

List of Subjects in 49 CFR Part 571

Imports, Motor vehicle safety, Motor vehicles, Rubber and rubber products, Tires.

In consideration of the foregoing, the agency is amending Standard No. 304; *Compressed Natural Gas Fuel Container Integrity,* part 571 at Title 49 of the Code of Federal Regulations as follows:

PART 571—[AMENDED]

1. The authority citation for Part 571 continues to read as follows:

Authority: 49 U.S.C. 322, 30111, 30115, 30117 and 30166; delegation of authority at 49 CFR 1.50.

2. Section 571.304 is amended by revising S7.4(g) to read as follows:

§ 571.304 Standard No. 304, Compressed Natural Gas Fuel Container Integrity.

* * * * *

S7.4 * * *

(g) The statement: ''This container should be visually inspected after a motor vehicle accident or fire and at least every 36 months or 36,000 miles, whichever comes first, for damage and deterioration.

* * * * *

Issued on: August 30, 1996.

Donald C. Bischoff,

Executive Director.

[FR Doc. 96–22762 Filed 9–5–96; 8:45 am]

BILLING CODE 4910–59–P

DEPARTMENT OF COMMERCE

National Oceanic and Atmospheric Administration

50 CFR Part 660

[Docket No. 951227306–5306–01; I.D. 082996C]

Fisheries Off West Coast States and in the Western Pacific; Pacific Coast Groundfish Fishery; Trip Limit Reductions

AGENCY: National Marine Fisheries Service (NMFS), National Oceanic and Atmospheric Administration (NOAA), Commerce.

ACTION: Fishing restrictions; request for comments.

SUMMARY: NMFS announces further restrictions to the Pacific Coast groundfish fisheries for widow rockfish and yellowtail rockfish. These actions are authorized by regulations implementing the Pacific Coast Groundfish Fishery Management Plan (FMP), which governs the groundfish fishery off Washington, Oregon, and California. These restrictions are intended to keep landings as close as possible to the 1996 harvest guidelines for these species.

DATES: Effective from 0001 hours (local time) September 1, 1996, until the effective date of the 1997 annual specifications and management measures for the Pacific Coast groundfish fishery, which will be published in the Federal Register. Comments will be accepted through September 23, 1996.

ADDRESSES: Submit comments to William Stelle, Jr., Director, Northwest Region (Regional Director), National Marine Fisheries Service, 7600 Sand Point Way NE., BIN-C15700, Seattle, WA 98115–0070; or Hilda Diaz-Soltero, Director, Southwest Region, National Marine Fisheries Service, 501 West Ocean Blvd., Suite 4200, Long Beach, CA 90802–4213.

FOR FURTHER INFORMATION CONTACT: William L. Robinson at 206–526–6140; or Rodney McInnis at 310–980–4040.

SUPPLEMENTARY INFORMATION: The following changes to routine management measures for widow and yellowtail rockfishes were recommended by the Pacific Fishery Management Council (Council), in consultation with the States of Washington, Oregon, and California, at its August 21–23, 1996, meeting in Portland, OR.

Widow rockfish. Widow rockfish currently are managed under a 2-month cumulative trip limit of 70,000 lb (31,752 kg). The best available information at the August 1996 Council meeting indicated that 3,426 mt of widow rockfish had been taken through July 31, 1996, and that the 6,500–mt harvest guideline would be reached by mid-November 1996, if the rate of landings is not slowed. The Council recommended that the 2-month cumulative trip limit for widow rockfish be reduced in September-October 1996 from 70,000 lb (31,752 kg) to 50,000 lb (22,680 kg) coastwide to keep landings within the harvest guideline in 1996. The Council also recommended reverting to 1-month cumulative trip limits of 25,000 lb (11,340 kg) during November and December 1996 to provide greater flexibility managing this species at the end of the year. If landings are not sufficiently curtailed, trip limits may be reduced further, or landings prohibited, in November and/or December 1996.

Yellowtail rockfish. Yellowtail rockfish is one component of the *Sebastes* complex, and is managed with different harvest guidelines and trip limits north and south of Cape Lookout, OR (45°20'15'' N. lat.). South of Cape Mendocino, CA (40°30' N. lat.) there is no specific harvest guideline or trip limit for yellowtail rockfish, other than the overall limit for the *Sebastes* complex. The northern harvest guideline for yellowtail rockfish (which includes the U.S. portion of the Vancouver area plus the Columbia area north of Cape Lookout) is 3,590 mt, and the southern harvest guideline (for the Columbia area south of Cape Lookout plus the Eureka area) is 2,580 mt.

The best available information at the August 1996 Council meeting indicated that 2,139 mt of yellowtail rockfish had been taken north of Cape Lookout through July 31, 1996, and that the 3,590–mt harvest guideline for this area would be reached by late October or early November if the rate of landings is not slowed. The Council recommended an immediate reduction in the 2-month cumulative trip limit, from 32,000 lb (14,515 kg) to 20,000 lb (9,072 kg) for yellowtail rockfish north of Cape Lookout in September-October 1996. In addition, as for widow rockfish, the Council recommended reverting to 1-month cumulative trip limits, that are half the 2-month cumulative trip limits, during November and December 1996 to provide greater flexibility managing this species at the end of the year. The 1-month cumulative trip limits also apply to the *Sebastes* complex and canary rockfish, another major component of the complex, north of Cape Mendocino, for consistency with the limits for yellowtail rockfish. Consistency is necessary to accommodate special provisions implemented by the States of Oregon and Washington that enable fishers to operate on both sides of Cape Lookout and keep the larger, southern limit for yellowtail rockfish and the *Sebastes* complex. These provisions would be impossible to implement if a 1-month limit applied north of the line and a 2-month limit applied south. If landings are not sufficiently curtailed, trip limits may be reduced further, or landings prohibited, in November and/or December 1996.

At its October 1996 meeting, the Council will review the progress of these and other groundfish fisheries and may recommend changes to the limits announced herein. Any changes approved by NMFS will be announced in the Federal Register.

NMFS action. NMFS concurs with the Council's recommendations, which are intended to keep landings of widow rockfish and yellowtail rockfish within their 1996 harvest guidelines.

The 60–percent monthly limits in the limited entry fishery apply only in conjunction with 2-month cumulative trip limits, and therefore are not a part of the 1-month cumulative trip limits established for November and December 1996.

The trip limit changes apply to both the limited entry and open access fisheries, including exempt trawl gear used to harvest pink shrimp and prawns. In addition, as stated in the annual management measures at 61 FR 279 (January 4, 1996), ''A vessel operating in the open access fishery must not exceed any trip limit, frequency limit, and/or size limit for the open access fishery; or for the same gear and/or subarea in the limited entry fishery; or, in any calendar month, 50

percent of any 2-month cumulative trip limit for the same gear and/or subarea in the limited entry fishery, called the '50–percent monthly limit.'"

The annual management measures published at 61 FR 279, January 4, 1996, as amended, are modified as follows:

1. Paragraphs IV.B.(1) and (2) of the annual management measures for widow rockfish are revised to read as follows:

B.(1) *Limited entry fishery*.

(a) *September-October 1996*. The cumulative trip limit for widow rockfish is 50,000 lb (22,680 kg) per vessel for the 2-month period. The 60–percent monthly limit is 30,000 lb (13,608 kg).

(b) *November-December 1996*. The cumulative trip limit for widow rockfish is 25,000 lb (11,340 kg) per vessel per 1-month period.

(2) *Open access fishery*. Within the limits at paragraph IV.I. for the open access fishery, the cumulative monthly trip limit for widow rockfish during September-December 1996 is 25,000 lb (11,340 kg) per vessel per 1-month period.

2. Paragraphs IV.C.(2)(a)(i) and (ii) of the annual management measures for yellowtail rockfish and the *Sebastes* complex are revised to read as follows:

C.(2)(a) *Cumulative trip limits*.

(i) *North of Cape Lookout*.

(*A*) *September-October 1996*. The cumulative trip limit for the *Sebastes* complex taken and retained north of Cape Lookout is 70,000 lb (31,752 kg) per vessel for the 2-month period. Within this cumulative trip limit for the *Sebastes* complex, no more than 20,000 lb (9,072 kg) may be yellowtail rockfish taken and retained north of Cape Lookout, and no more than 18,000 lb (8,165 kg) may be canary rockfish.

(*B*) *November-December 1996*. The cumulative trip limit for the *Sebastes* complex taken and retained north of Cape Lookout is 35,000 lb (15,876 kg) per vessel per 1-month period. Within this cumulative trip limit for the *Sebastes* complex, no more than 10,000 lb (4,536 kg) may be yellowtail rockfish taken and retained north of Cape Lookout, and no more than 9,000 lb (4,082 kg) may be canary rockfish.

(ii) *Cape Lookout to Cape Mendocino*.

(*A*) *September-October 1996*. The cumulative trip limit for the *Sebastes* complex taken and retained between Cape Lookout and Cape Mendocino remains at 100,000 lb (45,359 kg) per vessel for the 2-month period. Within this cumulative trip limit for the *Sebastes* complex, no more than 70,000 lb (31,752 kg) may be yellowtail rockfish taken and retained between Cape Lookout and Cape Mendocino, and no more than 18,000 lb (8,165 kg) may be canary rockfish.

(*B*) *November-December 1996*. The cumulative trip limit for the *Sebastes* complex taken and retained between Cape Lookout and Cape Mendocino is 50,000 lb (22,680 kg) per vessel per 1-month period. Within this cumulative trip limit for the *Sebastes* complex, no more than 35,000 lb (15,876 kg) may be yellowtail rockfish taken and retained between Cape Lookout and Cape Mendocino, and no more than 9,000 lb (4,082 kg) may be canary rockfish.

3. Paragraph IV.C.(2)(a)(iv) of the annual management measures for yellowtail rockfish and the *Sebastes* complex is revised to read as follows:

(iv) The 60–percent monthly limits for September-October 1996 are: For the *Sebastes* complex, 42,000 lb (19,051 kg) north of Cape Lookout, 60,000 lb (27,216 kg) between Cape Lookout and Cape Mendocino, and 120,000 lb (54,431 kg) south of Cape Mendocino; for yellowtail rockfish, 12,000 lb (5,443 kg) north of Cape Lookout, and 42,000 lb (19,051 kg) between Cape Lookout and Cape Mendocino; for bocaccio, 36,000 lb (16,329 kg) south of Cape Mendocino; and, for canary rockfish, 10,800 lb (4,899 kg) coastwide.

4. Paragraph IV.C.(3)(b) of the annual management measures for yellowtail rockfish and the *Sebastes* complex is revised to read as follows:

C.(3)(b) *Open access fishery*. If smaller than the limits at paragraph IV.I. of the annual management measures, the following cumulative monthly trip limits apply (within the limits at paragraph IV.I.) during September-December 1996: For the *Sebastes* complex, 35,000 lb (15,876 kg) north of Cape Lookout, 50,000 lb (22,680 kg) between Cape Lookout and Cape Mendocino, and 100,000 lb (45,359 kg) south of Cape Mendocino; for yellowtail rockfish, 10,000 lb (4,536 kg) north of Cape Lookout, and 35,000 lb (15,876 kg) between Cape Lookout and Cape Mendocino; for bocaccio, 30,000 lb (13,608 kg) south of Cape Mendocino; and, for canary rockfish, 9,000 lb (4,082 kg) coastwide.

Classification

These actions are authorized by the regulations implementing the FMP. The determination to take these actions is based on the most recent data available. The aggregate data upon which the determinations are based are available for public inspection at the office of the Director, Northwest Region, NMFS (see **ADDRESSES**) during business hours. Because of the need for immediate action to slow the rate of harvest of widow and yellowtail rockfishes, and because the public had an opportunity to comment on the action at the August 1996 Council meeting, NMFS has determined that good cause exists for this document to be published without affording a prior opportunity for public comment or a 30-day delayed effectiveness period. These actions are taken under the authority of 50 CFR 660.323(b)(1)(i), and are exempt from review under E.O. 12866.

Authority: 16 U.S.C. 1801 *et seq*.

Dated: August 30, 1996.

Donald J. Leedy

Acting Director, Office of Sustainable Fisheries, National Marine Fisheries Service.

[FR Doc. 96–22748 Filed 8–30–96; 5:03 pm]

BILLING CODE 3510–22–F

---

50 CFR Part 679

[Docket No. 960502124–6190–02; I.D. 083096D]

Fisheries of the Exclusive Economic Zone off Alaska; Scallop Fishery; Closure in Registration Area D

AGENCY: National Marine Fisheries Service (NMFS), National Oceanic and Atmospheric Administration (NOAA), Commerce.

ACTION: Closure.

SUMMARY: NMFS is closing the scallop fishery in all districts of Scallop Registration Area D (Yakutat) other than District 16. This action is necessary to prevent exceeding the scallop total allowable catch (TAC) in this area.

EFFECTIVE DATE: 1200 hrs, Alaska local time (A.l.t.), September 4, 1996, until 2400 hrs, A.l.t., December 31, 1996.

FOR FURTHER INFORMATION CONTACT: Andrew Smoker, 907–586–7228.

SUPPLEMENTARY INFORMATION: The scallop fishery in the exclusive economic zone off Alaska is managed by NMFS according to the Fishery Management Plan for Scallop Fishery off Alaska (FMP) prepared by the North Pacific Fishery Management Council under authority of the Magnuson Fishery Conservation and Management Act. Fishing for scallops is governed by regulations appearing at 50 CFR parts 600 and 679.

In accordance with § 679.62(b) the 1996 scallop TAC for all districts of Scallop Registration Area D other than District 16 was established by the Final 1996 Harvest Specifications of Scallops (61 FR 38099, July 23, 1996) as 195,000 lb (88,451 kg) shucked meat.

The Director, Alaska Region, NMFS, has determined, in accordance with 679.62(c), that the scallop TAC for all districts of Scallop Registration Area D

other than District 16 has been reached. Therefore, NMFS is prohibiting the taking and retention of scallops in all districts of Scallop Registration Area D other than District 16 from September 4, 1996, through 2400 hrs, A.l.t., December 31, 1996.

Classification

This action is taken under § 679.62 and is exempt from review under E.O. 12866.

Authority: 16 U.S.C. 1801 *et seq.*

Dated: August 30, 1996.

Donald J. Leedy,

Acting Director, Office of Sustainable Fisheries, National Marine Fisheries Service.

[FR Doc. 96–22760 Filed 9–3–96; 2:35pm]

BILLING CODE 3510–22–F

Proposed Rules

Federal Register
Vol. 61, No. 174
Friday, September 6, 1996

This section of the FEDERAL REGISTER contains notices to the public of the proposed issuance of rules and regulations. The purpose of these notices is to give interested persons an opportunity to participate in the rule making prior to the adoption of the final rules.

DEPARTMENT OF AGRICULTURE

Agricultural Marketing Service

7 CFR Part 1137

[DA–96–13]

Milk in the Eastern Colorado Marketing Area; Notice of Proposed Suspensions of Certain Provisions of the Order

AGENCY: Agricultural Marketing Service, USDA.

ACTION: Proposed suspension of rule.

SUMMARY: This document invites written comments on a proposal to suspend certain performance standards of the Eastern Colorado Federal milk order. The suspension was requested by Mid-America Dairymen Inc., a cooperative association that supplies milk forthe market's fluid needs. The suspension was requested to prevent uneconomic milk movements that otherwise would be required to maintain pool status for milk of producers who have been historically associated with the order.

DATES: Comments are due no later than September 13, 1996.

ADDRESSES: Comments (two copies) should be sent to USDA/AMS/Dairy Division, Order Formulation Branch, Room 2968, South Building, P.O. Box 96456, Washington, D.C. 20090–6456.

FOR FURTHER INFORMATION CONTACT: Clifford M. Carman, Marketing Specialist, USDA/AMS/Dairy Division, Order Formulation Branch, Room 2968, South Building, P.O. Box 96456, Washington, D.C. 20090–6456, (202) 720–9368.

SUPPLEMENTARY INFORMATION: The Department is issuing this proposed rule in conformancewith Executive Order 12866.

This proposed revision of rules has been reviewed under Executive Order 12988, Civil Justice Reform. This action is not intended to have retroactive effect. If adopted, this proposedaction will not preempt any state or local laws, regulations, or policies, unless they present an irreconcilable conflict with this rule.

The Agricultural Marketing Agreement Act of 1937, as amended (7 U.S.C. 601–674), provides that administrative proceedings mustbe exhausted before parties may file suit in court. Undersection 608c(15)(A) of the Act, any handler subject to an order may file with the Secretary a petition stating that the order, any provisions of the order, or any obligation imposed inconnection with the order is not in accordance with the law and request a modification of an order or to be exempted from theorder. A handler is afforded the opportunity for a hearing on the petition. After a hearing the Secretary would rule on the petition. The Act provides that the district court of the United States in any district in which the handler is an inhabitant, or has its principal place of business, has jurisdiction in equity to review the Secretary's ruling on the petition, provided a billin equity is filed not later than 20 days after date of the entry of the ruling.

Notice is hereby given that, pursuant to the provisions of the Agricultural Marketing Agreement Act of 1937, as amended, the following sections of the order regulating the handling of milk in the Eastern Colorado marketing area are being considered:

1. For the months of September 1, 1996, through February 28, 1997: In § 1137.7(b), the second sentence is amended by suspending the words ''plant which has qualified as a'' and ''of March through August''; and

2. For the months of September 1, 1996, through August 31, 1997: In § 1137.12(a)(1), the first sentence is amended by suspending the words ''from whom at least three deliveries of milk are received during the month at a distributing pool plant''; and in the second sentence ''30 percent in the months of March, April, May, June, July, and December and 20 percent in other months of'', and the word ''distributing''.

All persons who desire to submit written data, views or arguments about the proposed suspension should send two copies of their views to USDA/AMS/Dairy Division, Order Formulation Branch, Room 2968, South Building, P.O. Box 96456, Washington, D.C. 20090–6456 by the 7th day after publication of this notice in the Federal Register. The filing period is limited to seven days because a longer period would not provide the time needed to complete the required procedures before the requested suspension is to be effective.

All written submissions made pursuant to this notice will be made available for public inspection in the Dairy Division during regular business hours (7 CFR 1.27(b)).

Small Business Consideration

The Regulatory Flexibility Act (5 U.S.C. 601–612) requires the Agency to examine the impact of a proposed rule on small entities. Pursuant to 5 U.S.C. 605(b), the Agricultural Marketing Service has certified that this action would not have asignificant economic impact on a substantial number of small entities. Such action would lessen the regulatory impact of theorder on certain milk handlers and would tend to ensure that dairy farmers would continue to have their milk priced under the order and thereby receive the benefits that accrue from such pricing.

The Regulatory Flexibility Act seeks to ensure that, within the statutory authority of a program, the regulatory and informational requirements are tailored to the size and nature of small businesses. For the purpose of the Act, a dairy farm is a small business if it has an annual gross revenue of less than $500,000, and a dairy products manufacturer is a small business if it has fewer than 500 employees. For the purpose of determining which dairy farms are small businesses, the $500,000 per year criterion was divided by 12, then by the uniform price, to arrive at a 300,000 pounds-per-month limit for ''small'' dairy farmers.

For the month of June 1996, 429 dairy farmers were producers under the Eastern Colorado milk order. Of these, all but 115 would be considered small businesses, having less than 300,000 pounds of marketings for the month. Of the dairy farmers in the small business category, 181 marketed less than 100,000 pounds of milk, 105 marketed between 100,000 and 200,000 pounds, and 28 marketed between 200,000 and 300,000 pounds of milk during June.

There were 10 handlers operating 11 plants for the month of June 1996, pooled, or regulated, under the Eastern Colorado order. The individual plants, for the most part, would meet the SBA definition of a small business, having

less than 500 employees. However, most of these plants are part of larger businesses that operate multiple plants and meet the definition of large entities on that basis.

The proposed rule would suspend certain portions of the pool plant and producer definitions of the Eastern Colorado order. The proposed suspension would make it easier for handlers to qualify milk for pooling under the order and tend to ensure that dairy farmers would continue to have their milk priced under theorder and thereby receive the benefits that accrue from such pricing.

Proposed Suspension—Eastern Colorado—DA–96–13

Interested parties are invited to submit comments on the probable regulatory and informational impact of this proposed rule on small businesses. Also, parties may suggest modifications of this proposal for the purpose of tailoring their applicability to small businesses.

Statement of Consideration

The proposed suspension was requested by Mid-America Dairymen, Inc. (Mid-Am), a cooperative association that has pooled milk of dairy farmers on the Eastern Colorado order for several years. Mid-Am has requested the suspension to prevent the uneconomic and inefficient movement of milk for the sole purpose of pooling the milk of producers historically associated with the Eastern Colorado order.

Mid-Am requests for the months of September 1996 through February 1997 the removal of the restriction on the months when automatic pool plant status applies for supply plants. Mid-Am also proposes that, for the months of September 1996 through August 1997, the touch-base requirement not apply and the diversion allowance for cooperatives be raised.

These provisions have been suspended previously in order to maintain the pool status of producers who have historically supplied the fluid needs of Eastern Colorado distributing plants. Mid-Am states that the marketing conditions that justified the prior suspensions continue to exist. Mid-Am asserts that they have made a commitment to meet the fluid requirements of fluid distributing plants if the suspension request is granted. Without the suspension, Mid-Am contends that it will be necessary to ship milk from distant farms to Denver-area bottling plants to qualify milk for pooling. The distant milk will displace locally-produced milk that would then have to be shipped from the Denver area to manufacturing plants located in outlying areas.

In addition, Mid-Am maintains that ample supplies of locally produced milk that can be delivered directly to distributing plants will be available to meet the market's fluid needs without requiring shipments from supply plants. Mid-Am also claims that neither the elimination of the touch-base requirement for producers nor the increase in the amount of milk that a cooperative can divert to nonpool plants should jeopardize the needs of the market's fluid processors.

In view of the foregoing, it may be appropriate to suspend the aforesaid portion of the pool plant and producer definitions of the Eastern Colorado order for the time periods stated.

List of Subjects in 7 CFR Part 1137

Milk marketing orders.

The authority citation for 7 CFR part 1137 continues to read as follows:

Authority: §§ 1–19, 48 Stat. 31, as amended; 7 U.S.C. 601–674.

Dated: August 30, 1996.

Kenneth C. Clayton,

Acting Administrator.

[FR Doc. 96–22787 Filed 9–5–96; 8:45 am]

BILLING CODE 3410–02–P

---

7 CFR Part 1160

[DA–96–09]

Fluid Milk Promotion Order; Invitation To Submit Comments on Proposed Amendments to the Order

AGENCY: Agricultural Marketing Service, USDA.

ACTION: Proposed rule.

SUMMARY: This document invites written comments on proposals to amend the Fluid Milk Promotion Order. The proposed amendments, requested by the National Fluid Milk Processor Promotion Board, which administers the order, would modify the term limits and membership status of Board members. The proposed rule would also amend certain order language in conformance with the 1996 Federal Agriculture Improvement and Reform Act. In addition, this proposed rule would revise or remove order language that has become obsolete and no longer effectuates the declared policy of the Fluid Milk Promotion Act of 1990, as amended.

DATES: Comments are due no later than October 7, 1996.

ADDRESSES: Comments (two copies) should be filed with the USDA/AMS/Dairy Division, Promotion and Research Staff, Room 2734, South Building, P.O. Box 96456, Washington, DC 20090–6456.

FOR FURTHER INFORMATION CONTACT: Eugene Krueger, Head, Promotion and Research Staff, USDA/AMS/Dairy Division, Room 2734, South Building, P.O. Box 96456, Washington, DC 20090–6456, (202) 720–6909.

Small Business Consideration

The Regulatory Flexibility Act (5 U.S.C. 601–612) requires the Agency to examine the impact of a proposed rule on small entities. Small businesses in the fluid milk processing industry have been defined by the Small Business Administration as those employing less than 500 employees. There are approximately 250 fluid milk processors subject to the provisions of the Fluid Milk Promotion Order. Most of the parties subject to the Order are considered small entities.

This rule would modify the term of office and membership provisions of the Fluid Milk Promotion Order. The proposed amendments would allow a National Fluid Milk Processor Promotion Board member who changes fluid milk processor affiliations during his or her term to be eligible to serve on the Board in another capacity during that same term. The proposed amendments would also modify the term of Board members to allow any member elected during the initial period to serve a term of one or two years to be eligible for reappointment for two additional three-year terms. The proposed amendments should clarify the Order with respect to membership status and term limits of its members.

This rule would also amend order language in conformance with the 1996 Federal Agriculture Improvement and Reform Act; the definition of research would be changed to conform with the definition in the Act and the order would be revised to reflect changes in the 1996 Act concerning those fluid milk processors who may request a referendum to suspend or terminate the order and who may vote to suspend or terminate the order or adjust the assessment rate.

Further, the rule would also revise or remove obsolete or unnecessary order language in conformance with the President's Regulatory Reform Initiative. Pursuant to 5 U.S.C. 605(b), the Agricultural Marketing Service has certified that this rule would not have a significant economic impact on a substantial number of small entities.

SUPPLEMENTARY INFORMATION: The Department is issuing this proposed rule in conformance with Executive Order 12866.

This proposed rule has been reviewed under Executive Order 12988, Civil Justice Reform. This rule is not intended to have a retroactive effect. If adopted, this proposed rule would not preempt any State or local laws, regulations, or policies unless they present an irreconcilable conflict with this rule.

The Fluid Milk Promotion Act of 1990, as amended, authorizes the Fluid Milk Promotion Order. The Act provides that administrative proceedings must be exhausted before parties may file suit in court. Under section 1999K of the Act, any person subject to a Fluid Milk Promotion Order may file with the Secretary a petition stating that the Order, any provision of the Order, or any obligation imposed in connection with the Order is not in accordance with the law and request a modification of the Order or to be exempted from the Order. A person subject to an order is afforded the opportunity for a hearing on the petition. After a hearing, the Secretary would rule on the petition. The Act provides that the district court of the United States in any district in which the person is an inhabitant, or has his principal place of business, has jurisdiction to review the Secretary's ruling on the petition, provided a complaint is filed not later than 20 days after the date of the entry of the ruling.

In accordance with the Paperwork Reduction Act (44 U.S.C. Chapter 35), the forms and reporting and recordkeeping requirements that are included in the Fluid Milk Promotion Order have been approved previously by the Office of Management and Budget (OMB) and were assigned OMB No. 0581–0093, except for Board members' nominee information sheets that were assigned OMB No. 0505–0001.

Statement of Consideration

The proposed rule would amend certain provisions of the Fluid Milk Promotion Order. Certain proposed amendments would modify the term limits and the membership status provisions of the Order. The proposed amendments would allow a National Fluid Milk Processor Promotion Board member who changes fluid milk processor affiliations during his or her term to be eligible to serve on the Board in another capacity during that same term. Under current order provisions, a Board member who changes fluid milk processor affiliations during his or her term is ineligible to serve on the Board in any capacity.

The proposed amendments would also modify the term of Board members to allow any member elected during the initial period to serve a term of one or two years to be eligible for reappointment for two additional three-year terms. Currently, the Order states that a Board member appointed to serve during the initial period is eligible to be reappointed to serve only one additional three-year term. Under these order provisions, some Board members will serve an initial term of less than three years because of the staggering of terms. The Board contends that the proposed amendments will clarify the Order with respect to membership status and term limits of its members.

This document also proposes to amend the Fluid Milk Promotion Order to conform with legislated changes made by the recently enacted 1996 Federal Agriculture Improvement and Reform Act (P.L. 104–127). Section 146 of the Act amends sections 1999C(6), 1999N(b)(2), 1999O(c), and 1999O(a) of the Fluid Milk Promotion Act of 1990, as amended, thereby necessitating changes to the Fluid Milk Promotion Order. The following sections of the Order would be amended on this basis:

1. In § 1160.112, Research would be redefined in conformance with the Act.

2. In § 1160.501, paragraphs (a) and (b)(2) would be amended in conformance with the Act in order to specify those fluid milk processors who may request a referendum to suspend or terminate the Order.

3. In § 1160.605, paragraph (b)(2) would be amended in conformance with the Act in order to specify those fluid milk processors who, on the basis of a referendum, may vote to suspend or terminate the Order, or adjust the assessment rate.

The President's Regulatory Reform Initiative, among other things, directs agencies to remove obsolete and unnecessary language and to find less burdensome ways to achieve regulatory goals. Changes are proposed in conformance with the initiative. These amendments to the Order and regulations would revise or remove order language that was needed to implement the order but is no longer needed. This language is obsolete and unnecessary because it relates to the initial fiscal period and the previously conducted initial continuation referendum. Provisions of the following sections of the Order would be amended on this basis:

1. § 1160.108 Fluid milk processor.
2. § 1160.113 Fiscal period.
3. § 1160.116 Initial referendum.
4. § 1160.209 Duties of the Board.
5. § 1160.211 Assessments.
6. § 1160.501 Continuation referenda.
7. § 1160.605 Date of the referendum.

List of Subjects in 7 CFR Part 1160

Fluid milk products, Milk, Promotion.

For the reasons set forth in the preamble, it is proposed that 7 CFR Part 1160 is amended as follows:

PART 1160—FLUID MILK PROMOTION PROGRAM

1. The authority citation for 7 CFR Part 1160 continues to read as follows:

Authority: 7 U.S.C. 6401–6417.

2. In § 1160.108, paragraph (a) is revised to read as follows:

§ 1160.108 Fluid milk processor.

(a) *Fluid milk processor* means any person who processes and markets commercially fluid milk products in consumer-type packages in the United States, except that the term fluid milk processor shall not include in each of the respective fiscal periods those persons who process and market not more than 500,000 pounds of such fluid milk products during the representative month, which shall be the first month of the fiscal period; *Provided, however,* that for the fiscal period following the initial fiscal period, the representative month shall be September 1995.

* * * * *

3. Section 1160.112 is revised to read as follows:

§ 1160.112 Research.

Research means market research to support advertising and promotion efforts, including educational activities, research directed to product characteristics, and product development, including new products or improved technology in production, manufacturing or processing of milk and the products of milk.

4. Section 1160.113 is revised to read as follows:

§ 1160.113 Fiscal period.

Fiscal period means the initial period of up to 30 months that this subpart is effective. Thereafter, the fiscal period shall be such annual period as the Board may determine, except that the Board may provide for a lesser or greater period as it may find appropriate for the period immediately after the initial fiscal period to assure continuity of fiscal periods until the beginning of the first annual fiscal period.

§ 1160.116 [Removed and Reserved]

5. Section 1160.116 is removed and reserved.

§ 1160.200 [Amended]

6. In § 1160.200, paragraph (a) is amended by adding the words ''in the position previously held by such

member'' after the words ''membership on the board''.

7. In § 1160.201, paragraph (b) is revised to read as follows:

§ 1160.201 Term of office.

* * * * *

(b) No member shall serve more than two consecutive terms, except that any member who is appointed to serve for an initial term of one or two years shall be eligible to be reappointed for two three-year terms. Appointment to another position on the Board is considered a consecutive term.

§ 1160.209 Duties of the board.

8. In § 1160.209, paragraph (b) is revised to read as follows:

* * * * *

(b) To prepare and submit to the Secretary for approval a budget for each fiscal period of the anticipated expenses and disbursements in the administration of this subpart, including a description of and the probable costs of consumer education, promotion and research projects;

* * * * *

9. In § 1160.211, paragraphs (a)(1) and (a)(2) are revised to read as follows:

§ 1160.211 Assessments.

(a)(1) Each fluid milk processor shall pay to the Board or its designated agent an assessment of $.20 per hundredweight of fluid milk products processed and marketed commercially in consumer-type packages in the United States by such fluid milk processor. Producer-handlers required to pay assessments under section 113(g) of the Dairy Production Stabilization Act of 1983 (7 U.S.C. 4504(g)), and not exempt under § 1160.108, shall also pay the assessment under this subpart. No assessments are required on fluid milk products exported from the United States. The Secretary shall have the authority to receive assessments on behalf of the Board.

(2) The Secretary shall announce the establishment of the assessment each month in the Class I price announcement in each milk marketing area by adding it to the Class I price for the following month. In the event the assessment is suspended for a given month, the Secretary shall inform all fluid milk processors of the suspension in the Class I price announcement for that month. The Secretary shall also inform fluid milk processors marketing fluid milk in areas not subject to milk marketing orders administered by the Secretary of the establishment or suspension of the assessment.

* * * * *

10. Section 1160.501 is amended by removing paragraph (a), redesignating paragraphs (b) through (d) as paragraphs (a) through (c), removing the the cross reference ''1160.501(c)'' in paragraph (c) and adding in its place ''1160.501(b)'', and revising newly designated paragraphs (a) and (b)(2) to read as follows:

§ 1160.501 Continuation referenda.

(a) The Secretary at any time may conduct a referendum among those persons who the Secretary determines were fluid milk processors during a representative period, as determined by the Secretary, on whether to suspend or terminate the order. The Secretary shall hold such a referendum at the request of the Board or of any group of such processors that marketed during a representative period, as determined by the Secretary, 10 percent or more of the volume of fluid milk products marketed in the United States by fluid milk processors voting in the preceding referendum.

(b) * * *

(1) * * *

(2) By fluid milk processors voting in the referendum that marketed during a representative period, as determined by the Secretary, 40 percent or more of the volume of fluid milk products marketed in the United States by fluid milk processors voting in the referendum.

11. In § 1160.605, paragraph (a) is removed, paragraphs (b) through (c) are redesignated as paragraphs (a) through (b), and newly designated paragraph (b)(2) is revised to read as follows:

§ 1160.605 Date of referendum.

* * * * *

(b) * * *

(1) * * *

(2) Upon request of the Board or upon request of any group of fluid milk processors that among them marketed during a representative period, as determined by the Secretary, 10 percent or more of the volume of fluid milk products marketed by fluid milk processors voting in the preceding referendum.

Dated: August 30, 1996.

Kenneth C. Clayton,

Acting Administrator.

[FR Doc. 96–22788 Filed 9–5–96; 8:45 am]

BILLING CODE 3410–02–P

DEPARTMENT OF THE TREASURY

Bureau of Alcohol, Tobacco and Firearms

27 CFR Part 178

[Notice No. 839]

RIN 1512–AB41

Definitions for the Categories of Persons Prohibited From Receiving Firearms (95R–051P)

AGENCY: Bureau of Alcohol, Tobacco and Firearms (ATF), Department of the Treasury.

ACTION: Notice of proposed rulemaking.

SUMMARY: The Bureau of Alcohol, Tobacco and Firearms (ATF) is proposing to amend the regulations to provide definitions for the categories of persons prohibited from receiving or possessing firearms. The proposed definitions will facilitate the implementation of the national instant criminal background check system (NICS) required under the Brady Handgun Violence Prevention Act.

DATES: Written comments must be received on or before December 5, 1996.

ADDRESSES: Send written comments to: Chief, Regulations Branch; Bureau of Alcohol, Tobacco and Firearms; P.O. Box 50221; Washington, DC 20091–0221; ATTN: Notice No. 839.

FOR FURTHER INFORMATION CONTACT: James P. Ficaretta, Regulations Branch, Bureau of Alcohol, Tobacco and Firearms, 650 Massachusetts Avenue, NW., Washington, DC 20226 (202–927–8230).

SUPPLEMENTARY INFORMATION:

Background

On November 30, 1993, Public Law 103–159 (107 Stat. 1536) was enacted, amending the Gun Control Act of 1968 (GCA), as amended (18 U.S.C. Chapter 44). Title I of Pub. L. 103–159, the ''Brady Handgun Violence Prevention Act'' (hereafter, ''Brady'' or ''Brady law''), imposed a waiting period of 5 days before a licensed importer, licensed manufacturer, or licensed dealer may transfer a handgun to a nonlicensed individual (interim provision). Brady requires that the chief law enforcement officer within 5 business days make a reasonable effort to determine whether the nonlicensed individual (transferee) is prohibited by law from receiving or possessing the handgun sought to be purchased. The waiting period provisions of the law became effective on February 28, 1994, and will cease to apply on November 30, 1998.

Brady also provides for the establishment of a national instant criminal background check system (NICS) that a firearms licensee must contact before transferring any firearm to nonlicensed individuals (permanent provision). Brady requires that NICS be established not later than November 30, 1998.

Section 922(g) of the GCA prohibits certain persons from receiving, possessing, shipping, or transporting any firearm. These prohibitions apply to any person who—

(1) Is under indictment for, or has been convicted in any court of, a crime punishable by imprisonment for a term exceeding one year;

(2) Is a fugitive from justice;

(3) Is an unlawful user of or addicted to any controlled substance;

(4) Has been adjudicated as a mental defective or who has been committed to a mental institution;

(5) Is an alien illegally or unlawfully in the United States;

(6) Has been discharged from the Armed Forces under dishonorable conditions;

(7) Having been a citizen of the United States, has renounced his citizenship; or

(8) Is subject to a court order that restrains the person from harassing, stalking, or threatening an intimate partner or child of such intimate partner.

To implement NICS, Brady authorizes the development of hardware and software systems to link State criminal history check systems into the national system. It also authorizes the Attorney General to obtain official information from any U.S. department or agency on persons for whom receipt of a firearm would be in violation of the law.

In order to establish NICS in such a way that it incorporates the information needed for all the categories of prohibited persons mentioned above, records systems from both Federal and State agencies must be included in the national system. For example, records on fugitives are needed from State and Federal law enforcement agencies. Records on aliens who are illegally or unlawfully in the United States are needed from the Immigration and Naturalization Service, and records on citizenship renunciates are needed from the Department of State. To ensure that the information provided to the national system is accurate, the categories of prohibited persons must be clearly defined in the regulations.

The current regulations already provide a definition for ''crime punishable by imprisonment for a term exceeding 1 year.'' In the following paragraphs ATF is proposing additional regulations for the various categories of persons who are prohibited from receiving or possessing firearms. In some instances, the proposed definition merely clarifies an existing regulation. In other cases, the proposed definitions are new.

Persons Who Are Under Indictment for a Crime Punishable by Imprisonment for a Term Exceeding 1 Year

The definition of ''indictment'' is based on 18 U.S.C. § 922(n) which makes it unlawful for any person who is under indictment for a crime punishable by imprisonment for a term exceeding one year to ship, transport, or receive firearms in interstate commerce. The proposed definition includes any formal accusation of a crime made by a prosecuting attorney (e.g., information), as distinguished from an ''indictment'' issued by a grand jury. In addition, the proposed definition includes criminal charges referred to a court-martial.

Persons Who Are Fugitives From Justice

The definition of ''fugitive from justice'' in the GCA includes any person who has fled from any State to avoid prosecution for a crime or to avoid giving testimony in any criminal proceeding. 18 U.S.C. § 921(a)(15). The legislative history of this provision indicates that the term includes both felonies and misdemeanors. The Omnibus Crime Control and Safe Streets Act of 1968, Pub. L. 90–351, Title IV, § 921(a)(14), 82 Stat. 226 (1968), limited the definition to crimes ''punishable by imprisonment for a term exceeding one year.'' However, the GCA amended Title IV to include any crime. To be a fugitive from justice, it is not necessary that the person left a State with the intent of fleeing the charges. *See, e.g., United States* v. *Spillane,* 913 F.2d 1079 (4th Cir. 1990). Rather, a person is a fugitive from justice if the person, knowing that charges are pending, purposefully leaves the State of prosecution and does not appear before the prosecuting tribunal. On the other hand, the definition does not include persons who are charged with crimes and there is no evidence that they left the State. For example, a person is not a fugitive from justice merely because he or she has outstanding traffic citations.

Persons Who Are Unlawful Users of or Addicted to Any Controlled Substance

With respect to the definition of ''unlawful user of any controlled substance,'' Federal law, 18 U.S.C. § 802, defines a controlled substance as a drug or other substance, or immediate precursor, included in schedules I–V. For example, opium and cocaine are controlled substances, whereas alcoholic beverages and tobacco are specifically excluded from the definition.

Moreover, under the proposed definition, a person must be a current user of a controlled substance to be prohibited by the GCA from acquiring or possessing firearms. Although there is no statutory definition of current use, applicable case law indicates that a person need not have been using drugs at the precise moment that he or she acquired or possessed a firearm to be under firearms disabilities with respect to acquiring or possessing a firearm as an unlawful user of a controlled substance. In *United States* v. *Corona,* 849 F.2d 562 (11th Cir. 1988), a defendant purchased nine firearms from a dealer on six different occasions during a 3-year period. The Government proved unlawful use during the entire 3-year period with testimony of an acquaintance of the defendant who had used cocaine with the defendant, testimony of a psychiatrist that he treated the defendant for 2 years and that the defendant admitted drug use, and records of a rehabilitation center. The court noted that it was not necessary to show that the person was an illegal user or addict at the precise moment that the firearms were purchased. Furthermore, in *United States v. Ocequeda,* 564 F.2d 1363 (9th Cir. 1977), the Government proved the firearms disability by evidence of prolonged use of heroin before, during, and after the firearms purchases.

The proposed definition is also consistent with the definition of ''current drug user'' applied by the Department of Labor in its administration of the Americans with Disabilities Act (ADA), 42 U.S.C. §§ 12101–12213. Regulations issued pursuant to the ADA indicate that the term ''current user'' is not intended to be limited to the use of drugs on a particular day, or within a matter of days or weeks before, but rather that the unlawful use occurred recently enough to indicate that the individual is actively engaged in such conduct. 29 CFR Part 1630, Appendix.

Similarly, the definition of ''addicted to any controlled substance'' is based on Federal law, 21 U.S.C. § 802, and defines an ''addict'' as an individual who uses any narcotic drug and who has lost the power of self- control with respect to the use of the narcotic drug.

Persons Who Have Been Adjudicated as Mental Defectives or Been Committed to a Mental Institution

Under the GCA, it is unlawful for any person who has been adjudicated a mental defective or committed to a mental institution to ship, transport, receive, or possess firearms. The legislative history of the GCA makes it clear that a formal adjudication or commitment by a court, board, commission or similar legal authority is necessary before firearms disabilities are incurred. H.R. Rep. 1956, 90th Cong., 2d Sess. 30 (1968). The plain language of the statute makes it clear that a formal commitment, for any reason, e.g., drug use, gives rise to firearms disabilities. However, the mere presence of a person in a mental institution for observation or a voluntary commitment to a mental hospital does not result in firearms disabilities.

With respect to the term ''adjudicated as a mental defective,'' ATF has examined the legislative history of the term, applicable case law, and the interpretation of the term by other Federal agencies. The legislative history makes it clear that Congress would broadly apply the prohibition against the ownership of firearms by ''mentally unstable'' or ''irresponsible'' persons. 114 Cong. Rec. 21780, 21791, 21832, and 22270 (1968).

The legislative history of the GCA is reviewed in detail in *Huddleston* v. *United States,* 415 U.S. 814 (1974). The Court stated that ''the principal purposes of the federal gun control legislation * * * was to curb crime by keeping 'firearms out of the hands of those not legally entitled to possess them, because of age, criminal background, or incompetency.' '' 415 U.S. at 824 (citation omitted). Citing remarks by Congressman Cellar, the Court added that ''* * * no person can dispute the need to prevent persons with a history of mental disturbances from buying, owning or possessing firearms.'' *Huddleston,* 415 U.S. at 828. See also S. Rep. No. 1097, 90th Cong., 2d Sess. 2 (1968), U.S. Code Cong & Ad.News 1968, pp. 2113–2114.

The Supreme Court also addressed the disability in *Barrett v. United States,* 423 U.S. 212 (1976). As the Court observed, the GCA demonstrated that Congress sought to keep firearms away from those persons Congress classified as potentially irresponsible and dangerous. ''These persons are comprehensively barred by the Act from acquiring firearms by any means.'' *Barrett* 413 U.S. at 218.

Another case held that the GCA is designed to prohibit the receipt and possession of firearms by individuals who are potentially dangerous, including those individuals who are mentally incompetent or are afflicted with mental illness. *U.S.* v. *Waters,* 23 F.3d 29, 35 (2d Cir. 1994), *cert. den.* 115 S. Ct. 185 (1994). In addition, the disability has been held to apply to persons in criminal cases who are found not guilty by reason of insanity. *See Buffaloe* v. *United States,* 449 F.2d 779 (4th Cir. 1971).

ATF has also examined the definition of ''mental incompetent'' used by the Department of Veterans Affairs. That definition covers persons who because of injury or disease lack the mental capacity to contract or manage their own affairs. 38 CFR § 3.353.

Based on the above, the proposed regulation will define ''adjudicated as a mental defective'' as a determination by lawful authority that persons are of marked subnormal intelligence, mentally ill, or mentally incompetent AND are found to be either a danger to themselves or to others as a result of mental disease or illness or because of injury or disease lack the mental capacity to contract or manage their own affairs. The term shall also include defendants in criminal cases who are determined by a verdict to be insane. It will not include persons who suffer from mental illness but have not been adjudicated by a lawful authority or committed to a mental institution. It would also not include persons who have been adjudicated to be suffering from a mental illness but who are not a danger to themselves or to others or do not lack the capacity to contract or manage their own affairs.

For purposes of this disability, the proposed regulations define ''mental institution'' to include mental health facilities, mental hospitals, sanitariums, psychiatric facilities, and other facilities that provide diagnoses by licensed professionals of mental retardation or mental illness, including a psychiatric ward in a general hospital.

Persons Who Are Aliens and Are Illegally or Unlawfully in the United States

Another category of prohibited persons under the GCA includes aliens who are illegally or unlawfully in the United States. Based on the statutory language and relevant case law, the proposed definition of ''alien illegally or unlawfully in the United States'' includes any alien: who has entered the country illegally; nonimmigrant whose authorized period of admission has expired; student who has failed to maintain status as a student; alien under order of deportation whether or not he or she has left the United States. The definition does not include aliens who are in ''immigration parole'' status in the United States pursuant to the Immigration and Naturalization Act. The proposed definition will provide that aliens who enter the country illegally and have not applied for legal status are subject to firearms disabilities. *United States* v. *Garcia,* 875 F.2d 257 (9th Cir. 1989). Further, students who enter the country legally but fail to maintain the student status required by their visas are illegal aliens subject to Federal firearms disabilities. *United States* v. *Bazargan,* 992 F.2d 844 (8th Cir. 1993).

Persons Who Have Been Discharged From the Armed Forces Under Dishonorable Conditions

The GCA makes it unlawful for persons who have been discharged from the Armed Forces under dishonorable conditions to receive or possess firearms. The legislative history of this provision shows that the prohibition originally applied to persons discharged under ''other than honorable conditions.'' The Omnibus Crime and Safe Streets Act of 1968, Pub. L. 90–351, Title VII, § 1202(2), 82 Stat. 226 (1968). However, Title VII was amended by the GCA to limit the prohibition to persons discharged under ''dishonorable conditions.'' Therefore, the proposed definition makes it clear that the prohibition applies only to persons discharged under dishonorable conditions but not to include persons separated from the Armed Forces as a result of other types of discharges, e.g., a bad conduct discharge.

Persons Who Have Renounced Their United States Citizenship

With respect to persons who have renounced their United States citizenship, Federal law provides that renunciation can only occur in a formal manner before a diplomatic or consular officer of the United States in a foreign state or before an officer designated by the Attorney General when the United States is in a state of war. 8 U.S.C. § 1481(a) (5) and (6).

Persons Who Are Subject to a Court Order Restraining Them From Committing Domestic Violence

ATF is proposing a definition of ''actual notice'' with respect to persons subject to court-issued restraining orders (§ 178.32). The Violent Crime Control and Law Enforcement Act of 1994 (the Act), Public Law 103–322, 108 Stat. 2014, September 13, 1994, amended the GCA to make it unlawful for persons subject to an order

restraining a person from harassing, stalking, or threatening an intimate partner of the person (e.g., spouse) to receive, ship, transport, or possess firearms. The Act provides that such restraining orders must have been issued after a hearing of which actual notice was given to the person and at which the person had an opportunity to participate. However, the Act does not define ''actual notice.'' The proposed definition of actual notice conforms with the generally recognized legal definition of that term, i.e., notice that is either expressly and actually given or inferred from an examination of surrounding facts and circumstances. The definition would not include publication of notice in a newspaper.

Executive Order 12866

It has been determined that this proposed rule is not a significant regulatory action as defined in E.O. 12866, because the economic effects flow directly from the underlying statute and not from this notice of proposed rulemaking. Accordingly, this proposal is not subject to the analysis required by this Executive order.

Regulatory Flexibility Act

It is hereby certified that this proposed regulation will not have a significant economic impact on a substantial number of small entities. This notice proposes definitions for the categories of persons prohibited from receiving or possessing firearms. The proposed definitions are necessary to implement the national instant criminal background check system required under the Brady law. This notice does not propose any reporting or recordkeeping requirements on firearms licensees. Accordingly, a regulatory flexibility analysis is not required.

Paperwork Reduction Act

The provisions of the Paperwork Reduction Act of 1980, Public Law 96–511, 44 U.S.C. Chapter 35, and its implementing regulations, 5 CFR Part 1320, do not apply to this notice of proposed rulemaking because no requirement to collect information is proposed.

Public Participation

ATF requests comments on the proposed regulations from all interested persons. Comments received on or before the closing date will be carefully considered. Comments received after that date will be given the same consideration if it is practical to do so, but assurance of consideration cannot be given except as to comments received on or before the closing date.

ATF will not recognize any material in comments as confidential. Comments may be disclosed to the public. Any material which the commenter considers to be confidential or inappropriate for disclosure to the public should not be included in the comment. The name of the person submitting a comment is not exempt from disclosure.

Any interested person who desires an opportunity to comment orally at a public hearing should submit his or her request, in writing, to the Director within the 90-day comment period. The Director, however, reserves the right to determine, in light of all circumstances, whether a public hearing is necessary.

Disclosure

Copies of this notice and the written comments will be available for public inspection during normal business hours at: ATF Public Reading Room, Room 6480, 650 Massachusetts Avenue, NW., Washington, DC.

Drafting Information. The author of this document is James P. Ficaretta, Regulations Branch, Bureau of Alcohol, Tobacco and Firearms.

List of Subjects in 27 CFR Part 178

Administrative practice and procedure, Arms and ammunition, Authority delegations, Customs duties and inspection, Exports, Imports, Military personnel, Penalties, Reporting requirements, Research, Seizures and forfeitures, and Transportation.

Authority and Issuance

27 CFR Part 178—COMMERCE IN FIREARMS AND AMMUNITION is amended as follows:

Paragraph 1. The authority citation for 27 CFR Part 178 continues to read as follows:

Authority: 5 U.S.C. 552(a); 18 U.S.C. 847, 921–930; 44 U.S.C. 3504(h).

Par. 2. Section 178.11 is amended by revising the definitions for ''discharged under dishonorable conditions'', ''fugitive from justice'', and ''indictment'', and by adding definitions for ''addicted to any controlled substance'', ''adjudicated as a mental defective'', ''alien illegally or unlawfully in the United States'', ''committed to a mental institution'', ''controlled substance'', ''mental institution'', ''renounced U.S. citizenship'', and ''unlawful user of any controlled substance'' to read as follows:

§ 178.11 Meaning of terms.

* * * * *

Adjudicated as a mental defective. (a) A determination by a court, board, commission, or other lawful authority that a person, as a result of marked subnormal intelligence, or mental illness, incompetency, condition, or disease:

(1) Is a danger to himself or to others; or

(2) Lacks the mental capacity to contract or manage his own affairs.

(b) The term shall include a finding of insanity by a court in a criminal case.

Alien illegally or unlawfully in the United States. (a) Aliens who are unlawfully in the United States or are not in a valid nonimmigrant or immigrant status. The term includes any alien—

(1) Who has entered the country illegally;

(2) Nonimmigrant whose authorized period of admission has expired;

(3) Student who has failed to maintain status as a student; or

(4) Under an order of deportation, whether or not he or she has left the United States.

(b) The term does not include aliens who are in ''immigration parole'' status in the United States pursuant to the Immigration and Naturalization Act (INA).

* * * * *

Committed to a mental institution. A formal commitment of a person to a mental institution by a court, board, commission, or other legal authority. The term includes a commitment to a mental institution involuntarily. The term includes a commitment for mental defectiveness or mental illness. It also includes commitments for other reasons, such as for drug use. The term does not include a person in a mental institution for observation or a voluntary admission to a mental institution.

Controlled substance. A drug or other substance, or immediate precursor, as defined in section 102 of the Controlled Substances Act, 21 U.S.C. 802. The term includes, but is not limited to, marijuana, depressants, stimulants, and narcotic drugs. The term does not include distilled spirits, wine, malt beverages, or tobacco, as those terms are defined or used in Subtitle E of the Internal Revenue Code of 1986, as amended.

* * * * *

Discharged under dishonorable conditions. Separation from the U.S. Armed Forces resulting from a Dishonorable Discharge. The term does not include separation from the Armed Forces resulting from any other discharge, e.g., a bad conduct discharge or a dismissal.

* * * * *

Fugitive from justice. Any person who has fled from any State to avoid

prosecution for a felony or a misdemeanor; or any person who leaves the State to avoid giving testimony in any criminal proceeding. The term also includes any person who knows that misdemeanor or felony charges are pending against such person and who leaves the State of prosecution.

* * * * *

Indictment. Includes an indictment or any formal accusation of a crime made by a prosecuting attorney, in any court under which a crime punishable by imprisonment for a term exceeding 1 year may be prosecuted or where a case has been referred to court-martial if the person is in the military.

* * * * *

Mental institution. Includes mental health facilities, mental hospitals, sanitariums, psychiatric facilities, and other facilities that provide diagnoses by licensed professionals of mental retardation or mental illness, including a psychiatric ward in a general hospital.

* * * * *

Renounced U.S. citizenship. A person has renounced his U.S. citizenship if the person, having been a citizen of the United States, has renounced citizenship either—

(a) Before a diplomatic or consular officer of the United States in a foreign state pursuant to 8 U.S.C. § 1481(a)(5) and (6); or

(b) Before an officer designated by the Attorney General when the United States is in a state of war.

* * * * *

Unlawful user of or addicted to any controlled substance. A person who uses a controlled substance and has lost the power of self-control with reference to the use of the controlled substance; and any person who is a current user of a controlled substance in a manner other than as prescribed by a licensed physician. Such use is not limited to the use of drugs on a particular day, or within a matter of days or weeks before, but rather that the unlawful use has occurred recently enough to indicate that the individual is actively engaged in such conduct. A person may be an unlawful current user of a controlled substance even though the substance is not being used at the precise time the person seeks to acquire a firearm or receives or possesses a firearm. An inference of current use may be drawn from evidence of a recent use or possession of a controlled substance or a pattern of use or possession that reasonably covers the present time, e.g., a conviction for use or possession of a controlled substance within the past year, or multiple arrests for such offenses within the past five years if the most recent arrest occurred within the past year.

* * * * *

Par. 3. Section 178.32(e) is added to read as follows:

§ 178.32 Prohibited shipment, transportation, possession, or receipt of firearms and ammunition by certain persons.

* * * * *

(e) The actual notice required by paragraphs (a)(8)(i) and (d)(8)(i) of this section is notice expressly and actually given, and brought home to the party directly, including service of process personally served on the party and service by mail. Actual notice also includes proof of facts and circumstances that raise the inference that the party received notice including, but not limited to, proof that notice was left at the party's dwelling house or usual place of abode with some person of suitable age and discretion residing therein; or proof that the party signed a return receipt for a hearing notice which had been mailed to the party. It does not include notice published in a newspaper.

Signed: May 29, 1996.

John W. Magaw,

Director.

Approved: June 6, 1996.

John P. Simpson,

Deputy Assistant Secretary, (Regulatory, Tariff and Trade Enforcement).

[FR Doc. 96–22827 Filed 9–5–96; 8:45 am]

BILLING CODE 4810–31–P

ENVIRONMENTAL PROTECTION AGENCY

40 CFR Part 52

[TN–146–2–9608b; FRL–5554–5]

Approval and Promulgation of Air Quality Implementation Plans; Tennessee; Approval of Revisions To Permit Requirements, Definitions and Administrative Requirements

AGENCY: Environmental Protection Agency (EPA)

ACTION: Proposed rule.

SUMMARY: The EPA proposes to approve the revisions to the Nashville/Davidson County portion of the Tennessee State Implementation Plan (SIP) submitted by the State of Tennessee for the purpose of revising the current regulations for the permit requirements for major sources of air pollution, including revisions to the general definitions, permit requirements, the Board's powers and duties, the variances and hearings procedures, the measurement and reporting of emissions, and the testing procedures. In the final rules section of this Federal Register, the EPA is approving the State's SIP revision as a direct final rule without prior proposal because the Agency views this as a noncontroversial revision amendment and anticipates no adverse comments. A detailed rationale for the approval is set forth in the direct final rule. If no adverse comments are received in response to this proposed rule, no further activity is contemplated in relation to this proposed rule. If EPA receives adverse comments, the direct final rule will be withdrawn and all public comments received will be addressed in a subsequent final rule based on this proposed rule. The EPA will not institute a second comment period on this document. Any parties interested in commenting on this document should do so at this time.

DATES: To be considered, comments must be received by October 7, 1996.

ADDRESSES: Written comments on this action should be addressed to Karen Borel, at the EPA Regional Office listed below. Copies of the documents relative to this action are available for public inspection during normal business hours at the following locations. The interested persons wanting to examine these documents should make an appointment with the appropriate office at least 24 hours before the visiting day.

Air and Radiation Docket and Information Center (Air Docket 6102), U.S. Environmental Protection Agency, 401 M Street, SW, Washington, DC 20460.

Environmental Protection Agency, Region 4 Air Programs Branch, 345 Courtland Street, NE, Atlanta, Georgia 30365.

Bureau of Environmental Health Services, Metropolitan Health Department, Nashville-Davidson County, 311–23rd Avenue, North, Nashville, Tennessee 37203.

Tennessee Department of Environment and Conservation, Division of Air Pollution Control, 9th Floor L & C Annex, 401 Church Street, Nashville, Tennessee 37243–1531.

FOR FURTHER INFORMATION CONTACT: Interested persons wanting to examine documents relative to this action should make an appointment with the Region 4 Air Programs Branch at least 24 hours before the visiting day. To schedule the appointment or to request additional information, contact Karen Borel, Regulatory Planning and Development Section, Air Programs Branch, Air, Pesticides & Toxics Management Division, Region 4 EPA, 345 Courtland

Street, NE, Atlanta, Georgia 30365. The telephone number is 404/347–3555 extension 4197. Reference file TN146–02–9608.

SUPPLEMENTARY INFORMATION: For additional information see the direct final rule which is published in the rules section of this Federal Register.

Dated: July 18, 1996.

A. Stanley Meiburg,

Acting Regional Administrator.

[FR Doc. 96–22808 Filed 9–5–96; 8:45 am]

BILLING CODE 6560–50–P

---

40 CFR Parts 52 and 81

[FRL–5560–5]

Approval and Promulgation of Implementation Plans; Designation of Areas for Air Quality Planning Purposes; Wyoming; Corrections

AGENCY: Environmental Protection Agency (EPA).

ACTION: Notice of proposed rulemaking.

SUMMARY: In this document, the EPA is proposing to correct the State Implementation Plan (SIP) for the State of Wyoming regarding the State's ambient standards for fluorides and hydrogen sulfide and the State's odor control regulation, pursuant to section 110(k)(6) of the Clean Air Act, as amended in 1990. In addition, EPA is correcting an error in the boundary description for the ''Powder River Basin'' PM–10 unclassifiable area in 40 CFR 81.351. In the final rules section of this Federal Register, the EPA is promulgating this action in a direct final rule without prior proposal because the Agency views this action as noncontroversial and anticipates no adverse comments. A detailed rationale for the action is set forth in the direct final rule. If no adverse comments are received in response to this proposed rule, no further activity is contemplated in relation to this rule. If the EPA receives adverse comments, then the direct final rule will be withdrawn and all public comments received will be addressed in a subsequent final rule based on this proposed rule. The EPA will not institute a second comment period on this document. Any parties interested in commenting on this document should do so at this time.

DATES: Comments on this proposed action must be received in writing by October 7, 1996.

ADDRESSES: Written comments should be addressed to Vicki Stamper, 8P2–A, at the EPA Regional Office listed below. Copies of the documents relevant to this action are available for public inspection during normal business hours at the following location: Air Program, Environmental Protection Agency, Region VIII, 999 18th Street, Suite 500, Denver, Colorado 80202–2466.

FOR FURTHER INFORMATION CONTACT: Vicki Stamper at (303) 312–6445.

SUPPLEMENTARY INFORMATION: See the information provided in the Direct Final rule of the same title which is located in the Rules Section of this Federal Register.

Dated: August 14, 1996.

Jack W. McGraw,

Acting Regional Administrator.

[FR Doc. 96–22644 Filed 9–5–96; 8:45 am]

BILLING CODE 6560–50–P

DEPARTMENT OF DEFENSE

48 CFR Parts 203, 215, and 252

Defense Federal Acquisition Regulation Supplement; Procurement Integrity

AGENCY: Department of Defense (DoD).

ACTION: Proposed rule with request for comments.

SUMMARY: The Director of Defense Procurement is proposing to amend the Defense Federal Acquisition Regulation Supplement (DFARS) to reflect the provisions of Section 4304 of the Federal Acquisition Reform Act of 1996, including the repeal of prohibitions on compensation to former Department of Defense employees in Sections 2397, 2397a, 2397b, and 2397c of Title 10, United States Code.

DATES: *Comment date:* Comments on the proposed rule should be submitted in writing to the address shown below on or before November 5, 1996, to be considered in the formulation of the final rule.

ADDRESSES: Interested parties should submit written comments to: Defense Acquisition Regulations Council, Attn: Michael Pelkey, PDUSD (A&T) DP (DAR), IMD 3D139, 3062 Defense Pentagon, Washington D.C. 20301–3062. Telefax number (703) 602–0350. Please cite DFARS Case 96–D310 in all correspondence related to this issue.

FOR FURTHER INFORMATION CONTACT: Michael Pelkey, (703) 602–0131.

SUPPLEMENTARY INFORMATION:

A. Background

Section 4304 of the Federal Acquisition Reform Act of 1996 (Pub. L. 104–106) amended the Procurement Integrity provision, Section 27 of the Officer of Federal Procurement Policy Act, and repeal Sections 2397, 2397a, 2397b, and 2397c of Title 10, United States Code, which proscribed certain compensation to former Department of Defense (DoD) employees. This rule removes regulations implementing the repealed sections and conforms DFARS section 203.104 with the FAR revisions being proposed under FAR Case 96–314, Procurement Integrity.

B. Regulatory Flexibility Act

The proposed rule is not expected to have a significant economic impact on a substantial number of small entities within the meaning of the regulatory Flexibility Act, 5 U.S.C. 601, *et seq.*, because the rule only applies to ''major defense contractors,'' (i.e., contractors with DoD contracts exceeding $10 million per Government fiscal year), and affects only the ability of such contractors to provide compensation to certain former DoD employees. An initial regulatory flexibility analysis has therefore not been performed. Comments are invited from small businesses and other interested parties. Comments from small entities concerning the affected DFARS subpart also will be considered in accordance with Section 610 of the Act. Such comments must be submitted separately and cite DFARS Case 96–D310 in correspondence.

C. Paperwork Reduction Act

The Paperwork Reduction Act applies because the rule would eliminate the information collection and reporting requirements of DFARS 203.170–2 and the associated clause at 252.203–7000. The requirements which would be eliminated were approved by the Officer of Management and Budget (OMB) under OMB Clearance number 0704–0277.

List of Subjects in 48 CFR Parts 203, 215, and 252

Government Procurement.

Michele P. Peterson,

Executive Editor, Defense Acquisition Regulations Council.

Therefore, 48 CFR Parts 203, 215, and 252 are proposed to be amended as follows:

1. The authority citation for 48 CFR Parts 203, 215, and 252 continues to read as follows:

Authority: 41 U.S.C. 421 and 48 CFR Chapter 1.

PART 203—IMPROPER BUSINESS PRACTICES AND PERSONAL CONFLICTS OF INTEREST

203.104–4 [Removed]

2. Section 203.104–4 is removed.

203.104–5 [Amended]

3. Section 203.104–5 is amended by redesignating paragraph (e)(4) as (d)(4); and revising, in newly redesignated paragraph (d)(4), the reference ''FAR 3.104–5(e)(4)'' to read ''FAR 3.104–5(d)(4)''.

203.170 through 203.170–4 [Removed]

4. Sections 203.170 through 203.170–4 are removeds.

PART 215—CONTRACTING BY NEGOTIATION

5. Section 215.608 is amended by revising the last sentence of paragraph (b) to read as follows:

215.608 Proposal evaluation.

* * * * *

(b) * * * Determinations based on violations or possible violations of Section 27 of the OFPP Act shall be made as specified in FAR 3.104.

PART 252—SOLICITATION PROVISIONS AND CONTRACT CLAUSES

252.203–7000 [Removed and reserved]

6. Section 252.203–7000 is removed and reserved.

[FR Doc. 96–22617 Filed 9–5–96; 8:45 am]

BILLING CODE 5000–04–M

48 CFR Parts 212, 219, 225, 226, 227, 233, and 252

[DFARS Case 96–D306]

Defense Federal Acquisition Regulation Supplement; Elimination of Certifications

AGENCY: Department of Defense (DoD).

ACTION: Proposed rule with request for comments.

SUMMARY: The Director of Defense Procurement is proposing to amend the Defense Federal Acquisition Regulation Supplement (DFARS) to remove certification requirements for contractors and offerors that are not specifically imposed by statute.

DATES: Comments on the proposed rule should be submitted in writing to the address shown below on or before November 5, 1996, to be considered in the formulation of the final rule.

ADDRESSES: Interested parties should submit written comments to: Defense Acquisition Regulations Council, Attn: Mr. Michael Mutty, PDUSD (A&T) DP (DAR), IMD 3D139, 3062 Defense Pentagon, Washington, DC 20301–3062. Telefax number (703) 602–0350. Please cite DFARS Case 96–D306 in all correspondence related to this issue.

FOR FURTHER INFORMATION CONTACT: Mr Michael Mutty, (703) 602–0131.

SUPPLEMENTARY INFORMATION:

A. Background

This proposed rule amends DFARS Parts 212, 219, 225, 226, 227, 233, and 252 to remove particular certification requirements. The proposed rule implements Section 4301(b) of the National Defense Authorization Act for Fiscal Year 1996 (Public Law 104–106). Section 4301(b) requires the head of each executive agency, that has agency procurement regulations containing one or more certification requirements for contractors and offerors that are not specifically imposed by statute, to issue for public comment a proposal to remove from the agency regulations those certification requirements that are not specifically imposed by statute. The head of the agency can omit such a certification from its proposal only if: (1) The senior procurement executive for the executive agency provides the head of the executive agency with a written justification for the requirement and a determination that there is no less burdensome means for administering and enforcing the particular regulation that contains the certification requirement; and (2) the head of the executive agency approves in writing the retention of such certification requirement.

The DFARS certifications for contractors and offerors proposed for elimination are summarized as follows:

DFARS citation	Title/subject
219.301	Representations by the offeror.
219.302–70	Protesting a small disadvantaged business representation.
225.603	Customs and Duties.
226.7005/7008	Eligibility as an HBCU or MI.
227.7004/7103/7104	Patents/Technical Data.
233.70/252.233–7000	Certification of Claims and Request for Adjustment or Relief.
252.216–7000	Economic Price Adjustment—Basic Steel, Aluminum, Brass, Bronze, or Copper Mill Products.
252.216–7001	Economic Price Adjustment—Nonstandard Steel Items.
252.217–7005	Inspection and Manner of Doing Work.
252.219–7000	Small Disadvantaged Business Concern Representation (DoD Contracts).
252.225–7000/7006	Buy American Act/Trade Agreements/Balance of Payments Program.
252.225–7007	Trade Agreements.
252.225–7009/7010/7037	Duty Free Entry.
252.225–7018	Notice of Prohibition of Certain Contracts with Foreign Entities for the Conduct of Ballistic Missile Defense RDT&E.
252.225–7027	Limitation on Sales Commissions and Fees.
252.225–7035/7036	Buy American Act/NAFTA/Balance of Payments Program.
252.226–7001	Historically Black College or University and Minority Institution Certification.
252.227–7036	Certification of Technical Data Conformity.
252.236–7003	Payment for Mobilization and Preparatory Work.
252.236–7006	Cost Limitation.
252.239–7007	Cancellation or Termination of Orders—Common Carriers.
252.247–7001	Price Adjustment.

The DFARS certifications for contractors and offerors specifically required by statute are summarized as follows:

DFARS citation	Title/subject	Statute
225.770/252.225–7031	Secondary Arab Boycott of Israel	10 U.S.C. 2410i.
232.970–1	Subcontractor Assertions of Nonpayment	31 U.S.C. 3903(b)(1)(B).
239.7406/252.239–7009	Cost or Pricing Data—Common Carriers	10 U.S.C. 2306a.
252.239–7010	Audit and Records—Common Carriers	10 U.S.C. 2306a.
252.243–7000	Engineering Change Proposals	10 U.S.C. 2306a.

B. Regulatory Flexibility Act

This proposed rule is expected to have a significant beneficial impact on a substantial number of small entities, because it reduces the number of certifications that offerors and contractors must provide to the Government. An Initial Regulatory Flexibility Analysis (IRFA) has been prepared and may be obtained from the address specified herein. A copy of the IRFA has been submitted to the Chief Counsel for Advocacy of the Small Business Administration. The IRFA is summarized as follows: This rule removes DFARS certification requirements for contractors and offerors that are not specifically imposed by statute. The objective and legal basis of the rule is Section 4301(b) of the Fiscal Year 1996 Defense Authorization Act (Public Law 104–106). The rule will apply to all entities, large and small, who are interested in receiving Government contracts. The rule imposes no reporting, recordkeeping, or other compliance requirements, but, rather, deletes existing certification requirements that are not required by statute. The rule does not duplicate, overlap, or conflict with any other Federal rules. There are no practical alternatives that will effectively implement Section 4301(b) of Public Law 104–106. The rule is expected to have a beneficial impact on the public and, therefore, applies equally to both large and small entities.

Comments are invited from small businesses and other interested parties. Comments from small entities concerning the affected DFARS subparts also will be considered in accordance with 5 U.S.C. 610. Such comments must be submitted separately and cite DFARS Case 96–D306 in correspondence.

C. Paperwork Reduction Act

The Paperwork Reduction Act does not apply because the proposed rule does not impose any new recordkeeping, information collection requirements, or collections of information from offerors, contractors, or members of the public which require the approval of the Office of Management and Budget under 44 U.S.C. 3501, et seq.

List of Subjects in 48 CFR Parts 212, 219, 225, 226, 227, 233, and 252

Government procurement.

Michele P. Peterson,

Executive Editor, Defense Acquisition Regulations Council.

Therefore, 48 CFR Parts 212, 219, 225, 226, 227, 233, and 252 are proposed to be amended as follows:

1. The authority citation for 48 CFR Parts 212, 219, 225, 226, 227, 233, and 252 continues to read as follows:

Authority: 41 U.S.C. 421 and 48 CFR Chapter 1.

PART 212—ACQUISITION OF COMMERCIAL ITEMS

2. Section 212.301 is amended by revising paragraph (f)(ii) to read as follows:

212.301 Solicitation provisions and contract clauses for the acquisition of commercial items.

(f) * * *

(ii) Use one of the following provisions as prescribed in Part 225:

(A) 252.225–7000, Buy American Act—Balance of Payments Program Provision.

(B) 252.225–7006, Buy American Act—Trade Agreements—Balance of Payments Program Provision.

(C) 252.225–7035, Buy American Act—North American Free Trade Agreement Implementation Act—Balance of Payments Program Provision.

* * * * *

PART 219—SMALL BUSINESS PROGRAMS

3. Section 219.301 is amended by revising paragraph (b) to read as follows:

219.301 Representation by the offeror.

* * * * *

(b) The contracting officer shall protest an offeror's representation that it is a small disadvantaged business concern when—

(i) There is conflicting evidence;

(ii) The offeror represents that the Small Business Administration previously determined the concern to be non-disadvantaged; or

(iii) The offeror represents its ownership as other than Black American, Hispanic American, Native American (including Indian tribes and Native Hawaiian organizations), Asian Pacific American, or Subcontinent Asian American; unless the offeror represents that—

(A) It currently is in the Section 8(a) program; or

(B) Within the 6 months preceding submission of its offer, the offeror was determined by the Small Business Administration to be socially and economically disadvantaged, and no circumstances have changed to vary that determination.

4. Section 219.302–70 is amended by revising paragraphs (d) and (e) to read as follows:

219.302–70 Protesting a small disadvantaged business representation.

* * * * *

(d) Upon receipt of a timely protest, the contracting officer shall withhold award and forward the protest to the SBA Office of Program Eligibility, Office of Minority Small Business and Capitol Ownership Development, 409 3rd Street, SW., Washington, DC 20416. Send SBA—

(1) The protest;

(2) The date the protest was received and a determination of timeliness; and

(3) The date of bid opening or date on which notification of apparent successful offeror was sent to unsuccessful offerors.

(e) Do not withhold award when—

(1) The contracting officer makes a written determination that award must be made to protect the public interest; or

(2) The offeror represents that, within the 6 months preceding submission of its offer, the SBA has determined the concern to be socially and economically disadvantaged, and no circumstances have changed to vary that determination.

* * * * *

PART 225—FOREIGN ACQUISITION

5. Section 225.109 is amended by revising the first sentence of paragraph (a) to read as follows:

225.109 Solicitation provisions and contract clauses.

(a) Use the provision at 252.225–7000, Buy American Act—Balance of Payments Program Provision, instead of

the provisions at FAR 52.225–1, Buy American Provision, and FAR 52.225–6, Balance of Payments Program Provision.
* * *

* * * * *

6. Section 225.408 is amended by revising paragraphs (a)(1) and (a)(3) to read as follows:

225.408 Solicitation provisions and contract clauses.

(a)(1) Use the provision at 252.225–7006, Buy American Act—Trade Agreements—Balance of Payments Program Provision, instead of the provision at FAR 52.225–8, Buy American Act—Trade Agreements—Balance of Payments Program Provision, in all solicitations that include the clause at 252.225–7007, Trade Agreements.

* * * * *

(3) Use the provision at 252.225–7035, Buy American Act—North American Free Trade Agreement Implementation Act—Balance of Payments Program Provision, instead of the provision at FAR 52.225–20, Buy American Act—North American Free Trade Agreement Implementation Act—Balance of Payments Program Provision, in all solicitations that include the clause at 252.225–7036, North American Free Trade Agreement Implementation Act.

* * * * *

7. Section 225.603 is amended by revising paragraph (1)(iii)(C)*(2)* to read as follows:

225.603 Procedures.

(1) * * *

(iii) * * *

(c) * * *

(2) The supplies so purchased will be delivered to the Government or incorporated in Government-owned property or in an end product to furnished to the Government, and the duty will be paid if such supplies or any portion are used for other than the performance of the Government contract or disposed of other than for the benefit of the Government in accordance with the contract terms; and

* * * * *

PART 226—OTHER SOCIOECONOMIC PROGRAMS

8. Section 226.7005 is amended by revising the introductory text of paragraph (b) and paragraph (b)(1) to read as follows:

226.7005 Eligibility as an HBCU or MI.

* * * * *

(b) The contracting officer shall accept an offeror's HBCU or MI status under the provision at 252.226–7001, unless—

(1) Another offeror challenges the status; or

* * * * *

226.7008 [Amended]

9. Section 226.7008 is amended in paragraph (b) by removing the word ''Certification'' and inserting the word ''Status'' in its place.

PART 227—PATENTS, DATA, AND COPYRIGHTS

227.7004 [Amended]

10. Section 227.7004 is amended in paragraph (a)(6) by removing the word ''certification'' and inserting the word ''declaration'' in its place.

227.7103–6 [Amended]

11. Section 227.7103–6 is amended in paragraph (e)(3) by removing the word ''Certification'' and inserting the word ''Declaration'' in its place.

227.7104 [Amended]

12. Section 227.7104 is amended in paragraph (e)(5) by removing the word ''Certification'' and inserting the word ''Declaration'' in its place.

PART 233—PROTESTS, DISPUTES, AND APPEALS

Subpart 233.70—[Removed]

13. Subpart 233.70 is removed.

PART 252—SOLICITATION PROVISIONS AND CONTRACT CLAUSES

14. Section 252.216–7000 is amended by removing paragraph (c)(4) and by revising paragraph (e)(1) to read as follows:

252.216–7000 Economic Price Adjustment—Basic Steel, Aluminum, Brass, Bronze, or Copper Mill Products.

* * * * *

(e) * * *

(1) The Contractor may, after that time, deliver any items which were completed or in the process of manufacture at the time of receipt of the cancellation notice, provided the Contractor notifies the Contracting Officer of such items within 10 days after the Contractor receives the cancellation notice.

* * * * *

252.216–7001 [Amended]

15. Section 252.216–7001 is amended in the introductory text of paragraph (f)(2) by removing the words ''and certifying''; and in the first sentence of paragraph (f)(4) by removing the word ''certified''.

16. Section 252.217–7005 is amended by revising paragraph (e)(6) to read as follows:

252.217–7005 Inspection and Manner of Doing Work.

* * * * *

(e) * * *

(6) Furnish the Contracting Officer or designated representative with a copy of the ''gas-free'' or ''safe-for-hotwork'' certificate, provided by a Marine Chemist or Coast Guard authorized person in accordance with Occupational Safety and Health Administration regulations (29 CFR 1915.14) before any hot work is done on a tank;

* * * * *

17. Section 252.219–7000 is amended by revising the introductory text of paragraph (c) to read as follows:

252.219–7000 Small Disadvantaged Business Concern Representation (DoD Contracts).

* * * * *

(c) Complete the following—

* * * * *

18. Section 252.225–7000 is amended by revising the section title, clause title and date, and paragraph (c) to read as follows:

252.225–7000 Buy American Act—Balance of Payments Program Provision.

* * * * *

Buy American Act—Balance of Payments Program Provision (Date)

* * * * *

(c) *Origin of end products.*

(1) Each end product, except those listed in paragraphs (c) (2) or (3) of this clause, is a domestic end product. Components of unknown origin are considered to have been mined, produced, or manufactured outside the United States or a qualifying country.

(2) The following end products are qualifying country end products:

Qualifying Country End Products

_____

Line Item Number

_____

Country of Origin

(3) The following end products are nonqualifying country end products:

Nonqualifying Country End Products

_____

Line Item Number

_____

Country of Origin (If known)

(End of provision)

19. Section 252.225–7006 is amended by revising the section title, clause title and date, and paragraph (c) to read as follows:

252.225–7006 Buy American Act—Trade Agreements—Balance of Payments Program Provision.

* * * * *

Buy American Act—Trade Agreements—Balance of Payments Program Provision (Date)

* * * * *

(c) *Origin of end products.*

(1) Each end product, except the end products listed in paragraph (c)(2) of this provision, is a domestic end product (as defined in the Buy American Act and Balance of Payments Program clause of this solicitation). Components of unknown origin are considered to have been mined, produced, or manufactured outside the United States or a qualifying country.

(2) The offeror must identify all end products that are not domestic end products.

(i) The following supplies qualify as ''U.S. made end products'' but do not meet the definition of ''domestic end product'':

_____

(insert line item number)

(ii) The following supplies are qualifying country end products:

_____

(insert line item number)

_____

(insert country of origin)

(iii) The following supplies qualify as designated country end products:

_____

(insert line item number)

_____

(insert country of origin)

(iv) The following supplies qualify as Caribbean Basin country end products:

_____

(insert line item number)

_____

(insert country of origin)

(v) The following supplies qualify as NAFTA country end products:

_____

(insert line item number)

_____

(insert country of origin)

(vi) The following supplies are other nondesignated country end products:

_____

(insert line item number)

_____

(insert country of origin)

(End of provision)

20. Section 252.225–7007 is amended by revising the introductory text of paragraph (c), paragraph (c)(2), and paragraph (d) to read as follows:

§ 252.225–7007 Trade Agreements.

* * * * *

(c) The Contractor agrees to deliver under this contract only U.S. made end products unless, in its offer, it specified delivery of qualifying country, designated country, NAFTA country, or nondesignated country end products in the Buy American Act—Trade Agreements—Balance of Payments Program Provision.

* * * * *

(2) An offer proposing that a qualifying country end product, a designated country end product, a NAFTA country end product, or a Caribbean Basin country end product will be supplied requires the Contractor to supply a qualifying country end product, a designated country end product, a NAFTA country end product, or a Caribbean Basin country end product, whichever is proposed, or, at the Contractor's option, a U.S. made end product.

(d) The offered price of end products listed under paragraphs (c)(2)(i) and (vi) of the Buy American Act—Trade Agreements—Balance of Payments Program Provision of the solicitation must include all applicable duty. The offered price of qualifying country end products, designated country end products, NAFTA country end products, and Caribbean Basin country end products for line items subject to the Trade Agreements Act, or the North American Free Trade Agreement Implementation Act, should not include custom fees or duty.

(End of clause)

21. Section 252.225–7009 is amended by revising paragraph (i)(10) to read as follows:

§ 252.225–7009 Duty-Free Entry—Qualifying Country End Products and Supplies.

* * * * *

(i) * * *

(10) An agreement by the Contractor that duty shall be paid by the Contractor to the extent that such supplies, or any portion (if not scrap or salvage), are diverted to nongovernmental use other than as a result of a competitive sale made, directed, or authorized by the Contracting Officer;

* * * * *

22. Section 252.225–7010 is amended by revising paragraph (c)(10) to read as follows:

§ 252.225–7010 Duty-Free Entry—Additional Provisions.

* * * * *

(c) * * *

(10) An agreement by the Contractor that duty shall be paid by the Contractor to the extent that such supplies, or any portion (if not scrap or salvage), are diverted to nongovernmetnal use other than as a result of a competitive sale made, directed, or authorized by the Contracting Officer.

* * * * *

23. Section 252.225–7018 is amended by revising paragraph (e) to read as follows:

252.225.7018 Notice of Prohibition of Certain Contracts with Foreign Entities for the Conduct of Ballistic Missile Defense RDT&E.

* * * * *

(e) The offeror (____) is (____) is not a U.S. firm.

(End of provision)

24. Section 252.225–7027 is amended by revising paragraphs (a) and (b) to read as follows:

252.225–7027 Limitation on Sales Commissions and Fees.

* * * * *

(a) For firm-fixed-price contracts or fixed-price contracts with economic price adjustment, the contract price (including any subcontracts) shall not include any direct or indirect cost of sales commissions or fees for Contractor sales representatives for solicitation or promotion or otherwise to secure the conclusion of the sale of any of the supplies or services called for by this contract to the Government of _____.

(b) For all other types of contracts, notwithstanding any other provision of this contract, any direct or indirect costs of sales commissions or fees for Contractor (or subcontractor) sales representatives for solicitation or promotion or otherwise to secure the conclusion of the sale of any of the supplies or services called for by this contract to the Government of _____ shall be an unallowable item of cost under this contract.

(End of clause)

25. Section 252.225–7035 is amended by revising the section title, clause title and date, and paragraph (c) to read as follows:

252.225–7035 Buy American Act—North American Free Trade Agreement Implementation Act—Balance of Payments Program Provision.

* * * * *

Buy American Act—North American Free Trade Agreement Implementation Act—Balance of Payment Program Provision (Date)

* * * * *

(c) *Origin of end products.*

(1) Each end product, except the end products listed in paragraph (c)(2) of this provision, is a domestic end product (as defined in the Buy American Act and Balance of Payments Program clause of this solicitation). Components of unknown origin are considered to have been mined, produced, or manufactured outside the United States or a qualifying country.

(2) The offeror must identify all end products that are not domestic end products.

(i) The following supplies qualify as ''U.S. made end products'' but do not meet the definition of ''domestic end product'':

_____

(insert line item number)

(ii) The following supplies are qualifying country (except Canada) end products:

_____

(insert line item number)

_____

(insert country of origin)

(iii) The following supplies qualify as NAFTA country end products:

_____

(insert line item number)

_____

(insert country of origin)

(iv) The following supplies are other non-NAFTA country end products:

_____

(insert line item number)

_____

(insert country of origin)

(End of provision)

26. Section 252.225–7036 is amended by revising paragraphs (c) and (d); and in Alternate I by revising the date and paragraph (c) to read as follows:

252.225–7036 North American Free Trade Agreement Implementation Act.

* * * * *

(c) The Contractor agrees to deliver under this contract only U.S. made end products unless, in its offer, it specified delivery of qualifying country, NAFTA country, or non-NAFTA country end products in the Buy American Act—North American Free Trade Agreement Implementation Act—Balance of Payments Program Provision. An offer proposing that a qualifying country end product or a NAFTA country end product will be supplied requires the Contractor to supply a qualifying country end product or a NAFTA country end product, whichever is proposed, or, at the Contractor's option, a U.S. made end product.

(d) The offered price of end products listed under paragraphs (c)(2) (i) and (iv) of the Buy American Act—North American Free Trade Agreement Implementation Act—Balance of Payment Program Provision of the solicitation must include all applicable duty. The offered price of qualifying country end products or NAFTA country end products for line items subject to the North American Free Trade Agreement Implementation Act, should not include custom fees or duty.

(End of clause)

Alternate I (Date)

* * * * *

(c) The Contractor agrees to deliver under this contract only U.S. made end products unless, in its offer, it specified delivery of qualifying country, NAFTA country, or non-NAFTA country end products in the Buy American Act—North American Free Trade Agreement Implementation Act—Balance of Payments Program Provision. An offer proposing that a qualifying country end product or a Canadian end product will be supplied requires the Contractor to supply a qualifying country end product or a Canadian end product, whichever is proposed, or, at the Contractor's option, a U.S. made end product.

27. Section 252.225–7037 is amended by revising paragraph (i)(10) to read as follows:

252.225–7037 Duty-Free Entry—NAFTA Country End Products and Supplies.

* * * * *

(i) * * *

(10) An agreement by the Contractor that duty shall be paid by the Contractor to the extent that such supplies, or any portion (if not scrap or salvage), are diverted to nongovernmental use other than as a result of a competitive sale made, directed, or authorized by the Contracting Officer; and

* * * * *

28. Section 252.226–7001 is amended by revising the section title, clause title and date, and paragraph (b) to read as follows:

252.226–7001 Historically Black College or University and Minority Institution Status.

* * * * *

HISTORICALLY BLACK COLLEGE OR UNIVERSITY AND MINORITY INSTITUTION STATUS (DATE)

* * * * *

(b) *Status.*

If applicable, the offeror shall check the appropriate box below:

_____ A historically black college or university

_____ A minority institution

(End of provision)

29. Section 252.227–7036 is revised to read as follows:

252.227–7036 Declaration of Technical Data Conformity.

As prescribed at 227.7103–6(e)(3) or 227.7104(e)(5), use the following clause:

Declaration of Technical Data Conformity (Date)

All technical data delivered under this contract shall be accompanied by the following written declaration: The Contractor, _____, hereby declares that, to the best of its knowledge and belief, the technical data delivered herewith under Contract No. _____ is complete, accurate, and complies with all requirements of the contract.

Date _____

Name and Title of Authorized Official _____

(End of clause)

252.233–7000 [Removed]

30. Section 252.233–7000 is removed.

31. Section 252.236–7003 is amended by revising paragraphs (c)(1) and (c)(2) and the introductory text of paragraph (c)(3) to read as follows:

252.236–7003 Payment for Mobilization and Preparatory Work.

* * * * *

(c) * * *

(1) An account of the Contractor's actual expenditures;

(2) Supporting documentation, including receipted bills or copies of payrolls and freight bills; and

(3) The Contractor's documentation—

* * * * *

252.236–7006 [Amended]

32. Section 252.236–7006 is amended by removing paragraph (c) and redesignating paragraph (d) as paragraph (c).

252.239–7007 [Amended]

33. Section 252.239–7007 is amended in paragraph (d)(1) by removing the word ''certified''.

252.247–7001 [Amended]

34. Section 252.247–7001 is amended in paragraph (g) by removing the word ''certification'' and inserting the word ''statement'' in its place.

[FR Doc. 96–22618 Filed 9–5–96; 8:45 am]

BILLING CODE 5000–04–M

DEPARTMENT OF THE INTERIOR

Fish and Wildlife Service

50 CFR Part 17

Endangered and Threatened Wildlife and Plants; Notice of Public Hearing and Reopening of Public Comment Period on Proposed Endangered Status for Two San Fransciso Bay California Tidal Marsh Plants

AGENCY: Fish and Wildlife Service, Interior.

ACTION: Proposed rule; notice of public hearing and reopening of public comment period.

SUMMARY: The U.S. Fish and Wildlife Service (Service), pursuant to the Endangered Species Act of 1973, as amended (Act), provides notice of a public hearing and reopening of the comment period on the proposed endangered status for *Cirsium hydrophilum* var. *hydrophilum* (Suisun thistle) and *Cordylanthus mollis* ssp. *mollis* (soft bird's-beak). All parties are invited to comment on this proposal.

DATES: The public hearing will be held from 6:00 p.m. to 8:00 p.m. on Wednesday, October 2, 1996, in Fairfield, California. The public comment period now closes on October 15, 1996. Any comments received by the closing date will be considered in the final decision on this proposal.

ADDRESSES: The public hearing will be held at the Holiday Inn, 1350 Holiday Lane, Fairfield, California. Written comments and materials concerning this proposal should be sent to the Field Supervisor, Sacramento Field Office, U.S. Fish and Wildlife Service, 3310 El Camino Avenue, Suite 130, Sacramento, California 95821–6340. Comments and materials received, as well as the supporting documentation used in preparing the rule, will be available for public inspection, by appointment, during normal business hours at the above address.

FOR FURTHER INFORMATION CONTACT: Kirsten Tarp, Sacramento Field Office (see **ADDRESSES** section) at (916) 979–2710; facsimile (916) 979–2723.

SUPPLEMENTARY INFORMATION:

Background

Cirsium hydrophilum var. *hydrophilum* (Suisun thistle) and *Cordylanthus mollis* ssp. *mollis* (soft bird's beak) are restricted to salt or brackish tidal marshes within the San Francisco Bay area in northern California. Habitat conversion, changes in salinity of tidal marshes, water pollution, indirect effects of urbanization, habitat fragmentation, mosquito abatement activities such as off-road vehicle use and dredging, competition with non-native plants, insect predation, chance environmental events, inadequacy of existing laws, erosion, and other human-caused activities variously threaten these plants. Activities such as waterfowl hunting, bird watching, and fishing do not adversely affect the plants. A proposal to list these two plants was published in the Federal Register on June 12, 1995 (60 FR 31000).

Section 4(b)(5)(E) of the Act (16 U.S.C. 1531 et seq.) requires that a public hearing be held if it is requested within 45 days of the publication of the proposed rule. A public hearing request was received within the allotted time period from Paul Campos, General Council for the Building Industry Association. Because a Congressional moratorium on the Service's activities associated with final listing actions was in effect from April 1995, to April 1996, scheduling of the hearing was delayed. The Service has now scheduled a public hearing to be held on Wednesday, October, 2, 1996, from 6:00 p.m. to 8:00 p.m. at the Holiday Inn, 1350 Holiday Lane, Fairfield, California.

Anyone wishing to make statements for the record should bring a written copy of their statement to the hearing. Oral statements may be limited in length if the number of parties present at the hearing necessitates such a limitation. Oral and written comments receive equal consideration. The Service places no limits on the length of written comments or materials presented at the hearing or mailed to the Service.

The comment period on the proposal was to close on August 21, 1995. To accommodate the hearing, the public comment period is reopened upon publication of this notice. Written comments may now be submitted until October 15, 1996, to the Service in the **ADDRESSES** section.

The primary author of this notice is Kirsten Tarp (see **ADDRESSES** section).

Authority

The authority for this action is the Endangered Species Act of 1973, as amended: (16 U.S.C. 1531 *et seq.*)

Dated: August 30, 1996.

Thomas Dwyer,

Acting Regional Director, Region 1, U.S. Fish and Wildlife Service.

[FR Doc. 96–22765 Filed 9–5–96; 8:45 am]

BILLING CODE 4310–55–P

DEPARTMENT OF COMMERCE

National Oceanic and Atmospheric Administration

50 CFR Part 648

[Docket No. 960805216–6236–02; I.D. 081696D]

RIN 0648–AH06

Fisheries of the Northeastern United States; Amendment 9 to the Fishery Management Plan for the Summer Flounder, Scup, and Black Sea Bass Fisheries; Resubmission of Disapproved Measure

AGENCY: National Marine Fisheries Service (NMFS), National Oceanic and Atmospheric Administration (NOAA), Commerce.

ACTION: Proposed rule; request for comments.

SUMMARY: NMFS issues this proposed rule to obtain public comments concerning a provision of Amendment 9 to the Fishery Management Plan (FMP) for the Summer Flounder, Scup, and Black Sea Bass Fisheries that was initially disapproved, but that has been revised and resubmitted by the Mid-Atlantic Fishery Management Council (Council). This measure would establish a quarterly coastwide commercial quota setting mechanism with trip limits for the coastal states from Maine through North Carolina. The intent of Amendment 9 is to reduce fishing mortality and to allow the stock to rebuild.

DATES: Public comments must be received on or before September 26, 1996.

ADDRESSES: Send comments on this proposed rule to Dr. Andrew A. Rosenberg, Regional Administrator, Northeast Regional Office, NMFS, One Blackburn Drive, Gloucester, MA 01930. Mark the outside of the envelope, ''Comments on the Resubmitted Black Sea Bass Measure.''

Copies of the resubmitted portion of Amendment 9 and other supporting documents are available upon request from David R. Keifer, Executive Director, Mid-Atlantic Fishery Management Council, Room 2115, Federal Building, 300 South New Street, Dover, DE 19901.

FOR FURTHER INFORMATION CONTACT: Regina L. Spallone, Fishery Policy Analyst, 508–281–9221.

SUPPLEMENTARY INFORMATION:

Background

The Council submitted Amendment 9 for Secretarial review on June 20, 1996. On July 19, 1996, NMFS, on behalf of the Secretary of Commerce, after a preliminary evaluation of Amendment 9, as authorized under section 304(a)(1)(A) of the Magnuson Fishery Management and Conservation Act (Magnuson Act), disapproved the provision that would have implemented a state-by-state quota for black sea bass in 1998. A proposed rule to implement the remainder of Amendment 9 was published on August 21, 1996 (61 FR 43217).

The Council revised the quota provision to address NMFS' concerns, which are summarized in the preamble to the proposed rule, and, under section 304(b)(3)(A) of the Magnuson Act, submitted for Secretarial review a proposed measure that would implement a quarterly coastwide quota with trip limits that would be allocated to the commercial black sea bass fishery from Maine through North Carolina.

Proposed Measures

The resubmitted measure would implement in 1998 a quarterly coastwide quota with trip limits that would be allocated to the commercial black sea bass fishery from Maine through North Carolina. The allocation and the associated percentages for the total quota would be: January–March (38.64 percent), April–June (29.26 percent), July–September (12.33 percent), and October–December (19.77 percent). Under the proposed measure, any black sea bass landed by a vessel possessing a black sea bass moratorium permit would count towards the quota, regardless of where the fish were harvested. Any black sea bass landed for sale by a vessel without a moratorium permit and fishing exclusively in state waters north of Cape Hatteras would be counted towards the quota by the state in which it is landed pursuant to the Fishery Management Plan for the Black Sea Bass Fishery adopted by the Atlantic States Marine Fisheries Commission. The Regional Director would close the exclusive economic zone (EEZ) to possession of black sea bass by commercial vessels with a

moratorium permit when any quarterly quota has been landed. States would have the responsibility for closure in their state to further landings.

A series of prohibitions and management measures have been proposed to address NMFS' original concerns with regard to monitoring and enforcement in the State of North Carolina. For example, because all landings of black sea bass by vessels with moratorium permits would count against the quota, landings of black sea bass in states south of North Carolina by these vessels would diminish the accuracy of the quota monitoring. The states of Maine through North Carolina have an investment in the administration of the quota system. In the event of a closure in the EEZ north of Cape Hatteras, vessels with moratorium permits could not possess black sea bass either north or south of Cape Hatteras in order to maintain the integrity of that closure, as it would be impossible to determine the harvest location of the black sea bass on board. As a consequence, owners of vessels that have both a moratorium permit and a snapper-grouper permit would be prevented from using their snapper-grouper permit to land black sea bass south of Cape Hatteras, unless they relinquish their moratorium permit. Therefore, to allow vessel owners with moratorium permits greater flexibility to fish for and land black sea bass south of Cape Hatteras, vessel owners could voluntarily relinquish their moratorium permit during a closure and fish the southern stock of black sea bass under their valid snapper-grouper permit. After a 6-month delay for administrative and enforcement purposes, they could reapply for a moratorium permit and again be subject to the provisions of that permit. It is anticipated that with these specific restrictions in place, implementation, monitoring, and enforcement of the quota would be possible.

Classification

Section 304(a)(1)(D)(ii) of the Magnuson Act, as amended, requires NMFS to publish regulations proposed by a Council within 15 days of receipt of the amendment and proposed regulations. At this time, NMFS has not determined whether the measures that this rule would implement are consistent with the national standards, other provisions of the Magnuson Act, and other applicable law. NMFS, in making that determination, will take into account the information, views, and comments received during the comment period.

This proposed rule has been determined to be not significant for the purposes of E.O. 12866.

The Assistant General Counsel for Legislation and Regulation, Department of Commerce, certified to the Chief Counsel for Advocacy of the Small Business Administration that this proposed rule issued under authority of section 304(a) of the Magnuson Fishery Conservation and Management Act will not have a significant economic impact on a substantial number of small entities during the 1997 fishing year. The proposed rule would implement a coastwide commercial quota setting mechanism with trip limits allocated to quarterly periods (quota) for the black sea bass fishery in coastal states from Maine through North Carolina.

Because the quota would not be initiated until 1998, there will be no immediate effects on small entities from this rulemaking. During the 1997 fishing year, the Black Sea Bass Monitoring Committee (Monitoring Committee) will recommend a coastwide commercial quota and trip limits for 1998. The Monitoring Committee will review commercial and recreational catch data; current estimates of fishing mortality; stock status; recent estimates of recruitment; virtual population analysis results; levels of noncompliance by fishermen or individual states; impact of size/mesh regulations; and other information, and recommend to the Mid-Atlantic Fishery Management Council (Council) the allowable levels of fishing and other restrictions necessary to achieve the specified target exploitation rates. Based on the Council's consideration of these factors and resulting recommendation, NMFS will issue the proposed specifications for the 1998 quota. If it is determined that the proposed specifications will not have a significant economic impact on a substantial number of small entities, it will be so certified. If not, an initial regulatory flexibility analysis will be prepared at that time.

The Council has determined that the revised measure has no impact on the previous determination that Amendment 9 is consistent to the maximum extent practicable with the approved coastal zone management programs of the Atlantic states. The Amendment 9 submission from the Council analyzed the impacts of a bimonthly coastwide quota and the change to a quarterly system is insignificant for the reasons outlined above. Therefore, the proposed modified measure falls within the scope of the Coastal Zone Management Act consistency review conducted for Amendment 9.

List of Subjects in 50 CFR Part 648

Fisheries, Fishing, Reporting and recordkeeping requirements.

Dated: August 30, 1996.

Nancy Foster,

Deputy Assistant Administrator for Fisheries, National Marine Fisheries Service.

For the reasons set out in the preamble, the proposed rule published at 61 FR 43217, August 21, 1996, proposing to amend 50 CFR part 648 is further proposed to be amended as follows:

PART 648—FISHERIES OF THE NORTHEASTERN UNITED STATES

1. The authority citation for part 648 continues to read as follows:

Authority: 16 U.S.C. 1801 *et seq.*

2. In § 648.4 paragraphs (a)(7)(i)(C), (a)(7)(i)(D), (a)(7)(i)(E), and (a)(7)(i)(F) are redesignated as (a)(7)(i)(D), (a)(7)(i)(E), (a)(7)(i)(F), and (a)(7)(i)(G), respectively, and paragraph (a)(7)(i)(C) is added to read as follows:

§ 648.4 Vessel permits.

* * * * *

(a)(7) * * *

(i) * * *

(C) *Voluntary relinquishment of permit.* A moratorium permit for the black sea bass fishery that is voluntarily relinquished or surrendered to the Regional Director will be reissued at the vessel owner's request after a minimum period of 6 months from the date of cancellation.

* * * * *

3. In § 648.14 paragraph (t)(3) is revised, and paragraphs (t)(9) through (t)(11) are added, inclusively, to read as follows:

§ 648.14 Prohibitions.

(t) * * *

(3) Land black sea bass for sale in any state, or part thereof, north or south of 35°15.3′ N. lat. after the effective date of the notification published in the Federal Register stating that the commercial coastwide quota has been harvested and the EEZ is closed to the harvest of black sea bass.

* * * * *

(9) Possess, retain or land black sea bass harvested in or from the EEZ in excess of the commercial trip limit established pursuant to § 648.140.

(10) Land black sea bass for sale in any state south of North Carolina.

(11) Possess black sea bass harvested in or from the EEZ north or south of 35°15.3' N. lat. after the effective date of the notification published in the Federal Register stating that the commercial coastwide quota has been harvested and the EEZ is closed to the harvest of black sea bass.

* * * * *

4. In § 648.140 paragraphs (b)(1) through (b)(7) are redesignated as (b)(3) through (b)(9), respectively, paragraphs (b)(1) and (b)(2) are added, paragraph (c) is revised, and paragraph (d) is added to read as follows:

§ 648.140 Catch quotas and other restrictions.

(a) * * *

(b) * * *

(1) A commercial quota allocated to quarterly periods set from a range of (0) to the maximum allowed to achieve the specified target exploitation rate specified in paragraph (a) of this section. Implementation of this measure will begin in 1998.

(2) A commercial trip limit set from a range of (0) to the maximum allowed to assure that the quarterly quota is not exceeded.

* * * * *

(c) *Annual fishing measures.* The Demersal Species Committee shall review the recommendations of the Black Sea Bass Monitoring Committee. Based on these recommendations and any public comment, the Demersal Species Committee shall make its recommendations to the Council with respect to the measures necessary to assure that the target exploitation rate specified in paragraph (a) of this section are not exceeded. The Council shall review these recommendations and, based on the recommendations and public comment, make recommendations to the Regional Director with respect to the measures necessary to assure that the target exploitation rate specified in paragraph (a) of this section is not exceeded. Included in the recommendation will be supporting documents, as appropriate, concerning the environmental and economic impacts of the proposed action. The Regional Director will review these recommendations and any recommendations of the Commission. After such review, the Regional Director will publish a proposed rule in the Federal Register by October 15 to implement a quarterly coastwide commercial quota, a recreational harvest limit, and additional management measures for the commercial fishery. A proposed rule will be published in the Federal Register by February 15 to implement additional management measures for the recreational fishery, if the Regional Director determines that such measures are necessary to assure that the target exploitation rate specified in paragraph (a) of this section is not exceeded. After considering public comment, the Regional Director will publish a final rule in the Federal Register to implement the measures necessary to assure that the target exploitation rate specified in paragraph (a) of this section is not exceeded.

(d) *Distribution of annual quota.* (1) Beginning January 1, 1998, a coastwide commercial quota will be allocated by quarterly periods based upon the following percentages:

QUARTERLY COMMERCIAL QUOTA SHARES

Quarter	Share (percent)
January-March	38.64
April-June	29.26
July-September	12.33
October-December	19.77

(2) All black sea bass landed for sale in the states from North Carolina through Maine by a vessel with a moratorium permit issued under § 648.4(a)(7) of this part shall be applied against that quarter's coastwide commercial quota, regardless of where the black sea bass were harvested. All black sea bass landed for sale in the states from North Carolina through Maine by any vessel without a moratorium permit and fishing exclusively in state waters north of 35°15.3' N. lat. will be counted against the quota by the state in which it is landed pursuant to the Fishery Management Plan for the Black Sea Bass Fishery adopted by the Atlantic States Marine Fisheries Commission. The Regional Director will determine the date on which the quarterly quota will be harvested and the EEZ north of 35°15.3' N. lat. closed. The Regional Director will publish a notice in the Federal Register advising that, upon that date, no vessel may possess black sea bass in this area during a closure, nor may vessels issued a moratorium permit land black sea bass during the closure. Any overages of the commercial coastwide quota landed will be deducted from that quarter's coastwide quota for the following year.

[FR Doc. 96–22752 Filed 9–5–96; 8:45 am]

BILLING CODE 3510–22–W

---

50 CFR Part 679

[I.D. 082796A]

RIN 0648–AH28

Fisheries of the Exclusive Economic Zone Off Alaska; Protection of Red King Crab in Bristol Bay

AGENCY: National Marine Fisheries Service (NMFS), National Oceanic and Atmospheric Administration (NOAA), Commerce.

ACTION: Notice of Availability of an Amendment to the Fishery Management Plan for the Groundfish Fishery of the Bering Sea and Aleutian Islands area; request for comments.

SUMMARY: The North Pacific Fishery Management Council (Council) has submitted Amendment 37 to the Fishery Management Plan for the Groundfish Fishery of the Bering Sea and Aleutian Islands Area (FMP) for Secretarial review. Amendment 37 would establish the Red King Crab Savings Area trawl closure and the Nearshore Bristol Bay trawl closure, require increased observer coverage on some vessels in the closure areas, and adjust the Zone 1 red king crab prohibited species catch limits based on Bristol Bay red king crab abundance and biomass.

DATES: Comments on the FMP amendment should be submitted on or before October 29, 1996.

ADDRESSES: Comments on the FMP amendment should be submitted to Ronald J. Berg, Chief, Fisheries Management Division, Alaska Region, NMFS, P.O. Box 21668, Juneau, Alaska, 99802–1668, Attn: Lori Gravel, or delivered to the Federal Building, 709 West 9th Street, Juneau, AK. Copies of Amendment 37 and the environmental assessment/regulatory impact review/initial regulatory flexibility analysis (EA/RIR/IRFA) prepared for the amendment are available from the North Pacific Fishery Management Council, 605 West 4th Avenue, Suite 306, Anchorage, AK 99501–2252; telephone 907–271–2809.

FOR FURTHER INFORMATION CONTACT: Kaja Brix, 907–586–7228.

SUPPLEMENTARY INFORMATION: The Magnuson Fishery Conservation and Management Act (Magnuson Act) requires that each Regional Fishery Management Council submit any fishery management plan or plan amendment it prepares to NMFS for review and approval, disapproval, or partial disapproval. The Magnuson Act also requires that NMFS, upon receiving a fishery management plan or amendment, immediately publish a notice that the fishery management plan or amendment is available for public review and comment. NMFS will consider the public comments received during the comment period in determining whether to approve the FMP or amendment.

Bering Sea crab stocks are currently at relatively low levels based on 1995 NMFS bottom trawl survey data, which indicated that exploitable biomass of Bristol Bay red king crab is at about one-fifth record levels. The red king crab

stock is at its lowest level since the fishery was closed after the first stock collapse in 1983. In 1994 and 1995, Bristol Bay was closed to red king crab fishing because the female threshold of 8.4 million crab was not reached. In addition, the annual NMFS trawl surveys indicated little prospect for increased recruitment of mature males or females, and low female spawning biomass. Also, the area east of 163° W. long. was closed to Tanner crab fishing to minimize the bycatch of female red king crabs.

In view of the declining red king crab stock and the need to further protect and conserve red king crab in the Bristol Bay area of the Bering Sea, Amendment 37 would implement the following management measures:

1. A year round closure in a portion of Bristol Bay, the Red King Crab Savings Area (RKCSA), to directed fishing for groundfish by vessels using non-pelagic trawl gear;

2. A year round closure to all trawling in the nearshore waters of Bristol Bay, except that a portion would be left open during the period April 1 to June 15 each year; and

3. Adjustments to the Zone 1 PSC limit for red king crab taken in trawl fisheries.

Amendment 37 is intended to protect declining populations of red king crab and to further the goals and objectives of the FMP.

List of Subjects in 50 CFR Part 679

Fisheries, Reporting and recordkeeping requirements.

Authority: 16 U.S.C. 773 *et seq.* and 1801 *et seq.*

Dated: August 30, 1996.

Gary C. Matlock,

Director, Office of Sustainable Fisheries, National Marine Fisheries Service.

[FR Doc. 96–22724 Filed 8–30–96; 4:55 pm]

BILLING CODE 3510–22–F

Notices

Federal Register
Vol. 61, No. 174
Friday, September 6, 1996

This section of the FEDERAL REGISTER contains documents other than rules or proposed rules that are applicable to the public. Notices of hearings and investigations, committee meetings, agency decisions and rulings, delegations of authority, filing of petitions and applications and agency statements of organization and functions are examples of documents appearing in this section.

DEPARTMENT OF AGRICULTURE

Submission for OMB Review; Comment Request

August 30, 1996.

The Department of Agriculture has submitted the following information collection requirement(s) to OMB for review and clearance under the Paperwork Reduction Act of 1995, Public Law 104–13. Comments regarding these information collections are best assured of having their full effect if received within 30 days of this notification. Comments should be addressed to: Desk Officer For Agriculture, Office of Information and Regulatory Affairs, Office of Management and Budget (OMB), Washington, D.C. 20503 and to Department Clearance Officer, USDA, OCIO, Mail Stop 7602, Washington, D.C. 20250–7602. Copies of the submission(s) may be obtained by calling (202) 720–6204 or (202) 720–6746.

Rural Business-Cooperative Service

Title: Survey—Cooperative Coordination of Production and Harvesting Decision.

Summary: The information will be collected from cooperatives involved in the production and marketing of fruits, vegetables and specialty crops for the purpose of determining to what extent these cooperatives manage and coordinate production practices and harvesting schedules with member growers.

Need and Use of the Information: The objectives of this research study are to determine the extent that fruit and vegetable cooperatives coordinate production and harvesting decisions, examine the effects these practices have on operating efficiency and competitiveness and to identify conditions and situations where implementation of coordination practices will have their greatest economic impact.

Description of Respondents: Business or other for-profit: Farms.

Number of Respondents: 210.

Frequency of Responses: Reporting: Other, one-time.

Total Burden Hours: 210.

Rural Housing Service

Title: CFR 1944–J, Section 504 Rural Housing Loans and Grants.

Summary: The objective of the Section 504 loan/grant program is to assist eligible, very low income, owner/occupants repair single family homes located in rural areas. Grants are only available for repairs that remove health or safety hazards.

Need and Use of the Information: The information is used to verify program eligibility requirements, to secure loan/grant assistance and to ensure that the program is administered in a manner consistent with legislative and administrative requirements.

Description of Respondents: Individuals or households.

Number of Respondents: 20,997.

Frequency of Responses: Reporting: On occasion.

Total Burden Hours: 1,679.

Agricultural Marketing Service

Title: Tart Cherries Grown in the States of Michigan, New York, Pennsylvania, Oregon, Utah, Washington, Wisconsin, Marketing Order No. 930.

Summary: Marketing Order No. 930 authorizes the regulation of tart cherries for the purpose of providing orderly marketing conditions and to improve returns to growers.

Need and Use of the Information: The information is needed to establish a marketing order for tart cherries and will be used to determine voter eligibility and determine eligibility for nomination to serve as producer and handler members on the board.

Description of Respondents: Business or other for profit; Farms.

Number of Respondents: 1,678

Frequency of Responses: Reporting: On occasion.

Total Burden Hours: 373.

Food and Consumer Service

Title: Summer Food Service Program Claim for Reimbursement

Summary: To fulfill requirements set forth in the summer food service program regulation issued by the Secretary of Agriculture, the meal and cost data must be collected on the FCS–143 claim form.

Need and use of the Information: The claim form is used to collect meal and cost data from sponsors in order to determine the reimbursement entitlement for meals served and to manage, plan, evaluate and account for government resources.

Description of Respondents: Not for-profit institutions.

Number of Respondents: 530.

Frequency of Responses: Recordkeeping; Reporting: Other, Summer.

Total Burden Hours: 1,193.

Food and Consumer Service

Title: Report of the Emergency Food Assistance Program (TEFAP) Administrative Costs

Summary: The common rule entitled ''Uniform Administrative Requirements for Grants and Cooperative Agreements to State and local government'' sets forth financial reporting requirements for State agencies administering nonentitlement programs such as TEFAP.

Need and Use of the Information: The information is used to ensure that States meet legislatively mandated requirements and that States match all Federal administrative funds that are not passed down to local agencies.

Description of Respondents: State, Local, or Tribal Government; Individuals or households; Business or other for-profit; Not-for-profit institutions; Farms; Federal Government

Number of Respondents: 55.

Frequency of Responses: Reporting: Quarterly.

Total Burden Hours: 963.

Foreign Agricultural Service

Title: Export Sales of U.S. Agricultural Commodities—Addendum

Summary: The Agricultural Trade Act of 1978 requires mandatory reporting by all export sellers of selected U.S. produced agricultural commodities. The published data is an ''early warning'' of sales activity and provides basis for more informed decisions by producers, exporters, futures market participants, consumers and government.

Need and Use of the Information: The export sales reporting system provides commodity market participants with information about commodity exports

and is one means by which USDA seeks to ensure fairness and soundness in commodity marketing.

Description of Respondents: Business or other for-profit.

Number of Respondents: 308.

Frequency of Responses: Recordkeeping; Reporting: Weekly.

Total Burden Hours: 22,245.

Donald E. Hulcher,

Deputy Departmental Clearance Officer.

[FR Doc. 96–22785 Filed 9–5–96; 8:45 am]

BILLING CODE 3410–01–M

COMMITTEE FOR PURCHASE FROM PEOPLE WHO ARE BLIND OR SEVERELY DISABLED

Procurement List Addition

AGENCY: Committee for Purchase From People Who Are Blind or Severely Disabled.

ACTION: Addition to the Procurement List.

SUMMARY: This action adds to the Procurement List a commodity to be furnished by nonprofit agencies employing persons who are blind or have other severe disabilities.

EFFECTIVE DATE: October 7, 1996.

ADDRESSES: Committee for Purchase From People Who Are Blind or Severely Disabled, Crystal Square 3, Suite 403, 1735 Jefferson Davis Highway, Arlington, Virginia 22202–3461.

FOR FURTHER INFORMATION CONTACT: Beverly Milkman (703) 603–7740.

SUPPLEMENTARY INFORMATION: On April 26, 1996, the Committee for Purchase From People Who Are Blind or Severely Disabled published notice (61 FR 18571) of proposed addition to the Procurement List. Comments were received from the current contractor for this aircraft safety belt. The contractor indicated that its business is exclusively in military specification items, either as a contractor for the Department of Defense (DoD) or as a supplier to other DoD contractors. The contractor claimed that the Committee's actions in the past have generally served to injure or seriously impede the progress of small manufacturers like itself. The contractor also claimed that the Committee's practice of taking items from a family of similar products produced by small manufacturers frustrates the investment strategies which lead small businesses to offer families of products because they can use components interchangeably to provide cost-effective products at lower prices. The contractor stated that the Committee's actions in adding aircraft safety belts to the Procurement List in 1983 and 1987 have cost the contractor millions of dollars in sales volume. As a result, the contractor considers the Committee's program to be its most significant competitor and the most significant impediment the contractor faces in its attempt to grow from a small to a mid-size business.

It is true that there could be some cost savings realized by a contractor by purchasing larger quantities of components. However, there is no requirement for a contractor to pass these savings to the Government in the form of lower prices for the product being procured. Moreover, the contracting activity did not aggregate the proposed item with other family items in an effort to obtain lower prices. Consequently, the Committee must assume that the contracting activity didn't consider that purchasing the items as a family would result in lower prices. The nonprofit agency will be requested to solicit quotations from the commenter's firm for the components that the firm produces.

As the contractor noted in its comments, the Committee's primary measure of impact of a Procurement List addition on a current contractor is the percentage of the contractor's sales which the addition represents. This addition represents a very small percentage of the contractor's sales. In addition, the Committee does look at the impact of previous additions on a contractor. However, the Committee gives greater weight to the impact of recent additions, and less to earlier ones, particularly when the contractor's sales have increased since the addition occurred. The reason for this approach is that contractors usually recover from Committee impacts, so earlier impacts are not often a significant factor in the total impact on a contractor of a new addition to the Procurement List. In this case, the contractor's sales have increased since the 1983 and 1987 additions and a 1991 addition of another commodity where it was the current contractor. Accordingly, the Committee has determined that the current addition of an aircraft safety belt to the Procurement List will not have a severe adverse impact on the current contractor.

The Committee has interpreted the contractor's comments about the impact of the Committee's Javits-Wagner-O'Day (JWOD) Program on small business generally as a contention that the Committee should not add to its Procurement List commodities manufactured by small businesses. The Committee does not agree with this contention. The great majority of nonprofit agencies participating in the JWOD Program are small organizations, and their business capacities are similar to those of small businesses. The Committee would not be able to fulfill its statutory mandate of creating jobs for people who are blind or have other severe disabilities through nonprofit agencies if it could not add commodities manufactured by small businesses to its Procurement List. In addition, the JWOD Program's share of Federal contracts is only a very small percentage of the size of small businesses' share of Federal contracting. Consequently, small businesses, including the contractor, will not be significantly impeded by the JWOD Program from competing for DoD and other Federal contracts.

After consideration of the material presented to it concerning capability of qualified nonprofit agencies to provide the commodity and impact of the addition on the current or most recent contractors, the Committee has determined that the commodity listed below are suitable for procurement by the Federal Government under 41 U.S.C. 46–48c and 41 CFR 51–2.4.

I certify that the following action will not have a significant impact on a substantial number of small entities. The major factors considered for this certification were:

1. The action will not result in any additional reporting, recordkeeping or other compliance requirements for small entities other than the small organizations that will furnish the commodity to the Government.

2. The action will not have a severe economic impact on current contractors for the commodity.

3. The action will result in authorizing small entities to furnish the commodity to the Government.

4. There are no known regulatory alternatives which would accomplish the objectives of the Javits-Wagner-O'Day Act (41 U.S.C. 46–48c) in connection with the commodity proposed for addition to the Procurement List.

Accordingly, the following commodity is hereby added to the Procurement List:

Belt, Aircraft Safety
1680–00–163–1570

This action does not affect current contracts awarded prior to the effective date of this addition or options that may be exercised under those contracts.

Beverly L. Milkman,

Executive Director.

[FR Doc. 96–22776 Filed 9–5–96; 8:45 am]

BILLING CODE 6353–01–M

Procurement List Additions

AGENCY: Committee for Purchase From People Who Are Blind or Severely Disabled.

ACTION: Additions to the Procurement List.

SUMMARY: This action adds to the Procurement List commodities and services to be furnished by nonprofit agencies employing persons who are blind or have other severe disabilities.

EFFECTIVE DATES: October 7, 1996.

ADDRESSES: Committee for Purchase From People Who Are Blind or Severely Disabled, Crystal Square 3, Suite 403, 1735 Jefferson Davis Highway, Arlington, Virginia 22202–3461.

FOR FURTHER INFORMATION CONTACT: Beverly Milkman (703) 603–7740.

SUPPLEMENTARY INFORMATION: On April 5, June 21, 28, July 26, 1996, the Committee for Purchase From People Who Are Blind or Severely Disabled published notices (61 F.R. 15225, 31927, 33710 and 39118) of proposed additions to the Procurement List.

After consideration of the material presented to it concerning capability of qualified nonprofit agencies to provide the commodities and services and impact of the additions on the current or most recent contractors, the Committee has determined that the commodities and services listed below are suitable for procurement by the Federal Government under 41 U.S.C. 46–48c and 41 CFR 51–2.4.

I certify that the following action will not have a significant impact on a substantial number of small entities. The major factors considered for this certification were:

1. The action will not result in any additional reporting, recordkeeping or other compliance requirements for small entities other than the small organizations that will furnish the commodities and services to the Government.

2. The action will not have a severe economic impact on current contractors for the commodity and services.

3. The action will result in authorizing small entities to furnish the commodities and services to the Government.

4. There are no known regulatory alternatives which would accomplish the objectives of the Javits-Wagner-O'Day Act (41 U.S.C. 46–48c) in connection with the commodities and services proposed for addition to the Procurement List. Accordingly, the following commodities and services are hereby added to the Procurement List:

Commodities

Tool Box and Kit
5140–01–424–9917 (box)
5180–01–423–6468 (kit)

Services

Grounds Maintenance, Scott Air Force Base, Illinois
Janitorial/Custodial, Federal Building and U.S. Courthouse, 46 E. Ohio Street, Indianapolis, Indiana
Janitorial/Grounds Maintenance, Calexico East Border Station, Calexico, California

This action does not affect current contracts awarded prior to the effective date of this addition or options that may be exercised under those contracts.

Beverly L. Milkman,

Executive Director.

[FR Doc. 96–22777 Filed 9–5–96; 8:45 am]

BILLING CODE 6353–01–M

Procurement List Addition

AGENCY: Committee for Purchase From People Who Are Blind or Severely Disabled.

ACTION: Addition to the Procurement List.

SUMMARY: This action adds to the Procurement List a commodity to be furnished by nonprofit agencies employing persons who are blind or have other severe disabilities.

EFFECTIVE DATE: October 7, 1996.

ADDRESSES: Committee for Purchase From People Who Are Blind or Severely Disabled, Crystal Square 3, Suite 403, 1735 Jefferson Davis Highway, Arlington, Virginia 22202–3461.

FOR FURTHER INFORMATION CONTACT: Beverly Milkman (703) 603–7740.

SUPPLEMENTARY INFORMATION: On May 24, 1996, the Committee for Purchase From People Who Are Blind or Severely Disabled published notices (61 FR 26266) of proposed addition to the Procurement List. Comments were received from the current contractor for the typewriter ribbon in response to a request for sales data. The contractor indicated that the Government contract for this ribbon represented a significant portion of the company's sales, and that loss of the contract would require personnel layoffs which would have adverse effects on the small community where the contractor is located. In order to mitigate this impact, the Committee decided to add only 40 percent of the Government requirement for the ribbon to the Procurement List rather than the 100 percent originally contemplated. The impact of this reduced addition on the contractor is below the percentage which the Committee considers to be severe adverse impact and should not result in the level of impact predicted by the contractor.

After consideration of the material presented to it concerning capability of qualified nonprofit agencies to provide the commodities and impact of the addition on the current or most recent contractors, the Committee has determined that the commodity listed below are suitable for procurement by the Federal Government under 41 U.S.C. 46–48c and 41 CFR 51–2.4.

I certify that the following action will not have a significant impact on a substantial number of small entities. The major factors considered for this certification were:

1. The action will not result in any additional reporting, recordkeeping or other compliance requirements for small entities other than the small organizations that will furnish the commodity to the Government.

2. The action will not have a severe economic impact on current contractors for the commodity.

3. The action will result in authorizing small entities to furnish the commodity the Government.

4. There are no known regulatory alternatives which would accomplish the objectives of the Javits-Wagner-O'Day Act (41 U.S.C. 46–48c) in connection with the commodity proposed for addition to the Procurement List.

Accordingly, the following commodity is hereby added to the Procurement List:

Ribbon, Typewriter
7510–01–219–2309
(40% of the Government's requirement)

This action does not affect current contracts awarded prior to the effective date of this addition or options that may be exercised under those contracts.

Beverly L. Milkman,

Executive Director.

[FR Doc. 96–22778 Filed 9–5–96; 8:45 am]

BILLING CODE 6353–01–M

Proposed Addition and Deletions

AGENCY: Committe for Purchase From People Who Are Blind or Severely Disabled.

ACTION: Proposed addition to and deletions from procurement list.

SUMMARY: The Committee has received proposals to add to the Procurement List a service to be furnished by nonprofit agencies employing persons who are blind or have other severe disabilities, and to delete commodities previously furnished by such agencies.

COMMENTS MUST BE RECEIVED ON OR BEFORE: October 7, 1996.

ADDRESSES: Committee for Purchase From People Who Are Blind or Severely Disabled, Crystal Square 3, Suite 403, 1735 Jefferson Davis Highway, Arlington, Virginia 22202–3461.

FOR FURTHER INFORMATION CONTACT: Beverly Milkman (703) 603–7740.

SUPPLEMENTARY INFORMATION: This notice is published pursuant to 41 U.S.C. 47(a)(2) and 41 CFR 51–2.3. Its purpose is to provide interested persons an opportunity to submit comments on the possible impact of the proposed actions.

Addition

If the Committee approves the proposed addition, all entities of the Federal Government (except as otherwise indicated) will be required to procure the service listed below from nonprofit agencies employing persons who are blind or have other severe disabilities.

I certify that the following action will not have a significant impact on a substantial number of small entities. The major factors considered for this certification were:

1. The action will not result in any additional reporting, recordkeeping or other compliance requirements for small entities other than the small organizations that will furnish the service to the Government.

2. The action does not appear to have a severe economic impact on current contractors for the service.

3. The action will result in authorizing small entities to furnish the service to the Government.

4. There are no known regulatory alternatives which would accomplish the objectives of the Javits-Wagner-O'Day Act (41 U.S.C. 46–48c) in connection with the service proposed for addition to the Procurement List.

Comments on this certification are invited. Commenters should identify the statement(s) underlying the certification on which they are providing additional information.

The following service has been proposed for addition to Procurement List for production by the nonprofit agency listed:

Disposal Support Services, Gunter Air Force Base and Fort Rucker, Alabama
NPA: Goodwill Industries of Central Alabama, Inc., Montgomery, Alabama

Deletions

The following commodities have been proposed for deletion from the Procurement List:

Bag, Urine Collection
6530–01–074–6600
Bandage, Gauze
6510–00–582–7992
6510–00–582–7993
Seat Cover
P.S. #054–B
Seat Assembly, Complete
P.S. #054–A
Splint, Wood
6515–00–372–1200
Hood, Extreme Cold Weather
8415–00–472–4695
Gown, Operating, Surgical
6532–00–083–6534
6532–00–083–6535
6532–00–083–6536
Chest, Lighting Equipment
6210–00–382–9173
Apron, Protective
6532–00–935–9765
Lacquer
8010–00–085–0559

Beverly L. Milkman,

Executive Director.

[FR Doc. 96–22779 Filed 9–5–96; 8:45 am]

BILLING CODE 6353–01–M

COMMISSION ON CIVIL RIGHTS

Agenda and Notice of Public Meeting of the Indiana Advisory Committee

Notice is hereby given, pursuant to the provisions of the rules and regulations of the U.S. Commission on Civil Rights, that a meeting of the Indiana Advisory Committee to the Commission will convene at 9:00 a.m. and adjourn at 1:00 p.m. on Tuesday, September 24, 1996, at the Radisson Hotel City Centre, 37 W. Ohio Street, Indianapolis, Indiana. The purpose of the meeting is to hold a press conference to release the report, The Enforcement of Affirmative Action Compliance in Indiana Under Executive Order 11246, discuss civil rights issues, and plan future activities.

Persons desiring additional information, or planning a presentation to the Committee, should contact Committee Chairperson Paul Chase, 317–920–3190, or Constance Davis, Director of the Midwestern Regional Office, 312–353–8311 (TDD 312–353–8362). Hearing-impaired persons who will attend the meeting and require the services of a sign language interpreter should contact the Regional Office at least five (5) working days before the scheduled date of the meeting.

The meeting will be conducted pursuant to the provisions of the rules and regulations of the Commission.

Dated at Washington, DC, August 27, 1996.

Carol-Lee Hurley,

Chief, Regional Programs Coordination Unit.

[FR Doc. 96–22711 Filed 9–5–96; 8:45 am]

BILLING CODE 6335–01–P

DEPARTMENT OF COMMERCE

National Oceanic and Atmospheric Administration

[I.D. 082996B]

Endangered Species; Permits

AGENCY: National Marine Fisheries Service (NMFS), National Oceanic and Atmospheric Administration (NOAA), Commerce.

ACTION: Notice of receipt of application for modification 1 to scientific research permit 943 (P430A).

SUMMARY: Notice is hereby given that Thomas Savoy of Connecticut Department of Environmental Protection (P430A) has applied in due form for modification 1 to scientific research permit 943 to take listed shortnose sturgeon.

DATES: Written comments or requests for a public hearing on this modification request must be received on or before October 7, 1996.

ADDRESSES: The application, permit, and related documents are available for review by appointment in the following offices:

Office of Protected Resources, F/PR8, NMFS, 1315 East-West Hwy., Room 13307, Silver Spring, MD 20910–3226 (301–713–1401); and

Director, Northeast Region, NMFS, One Blackburn Drive, Gloucester, MA 01930–2298 (508–281–9250).

Written comments, or requests for a public hearing on this application should be submitted to the Chief, Endangered Species Division, Office of Protected Resources.

SUPPLEMENTARY INFORMATION: Thomas Savoy (P430A) requests modification 1 under the authority of the Endangered Species Act of 1973 (ESA) (16 U.S.C. 1531–1543) and NMFS regulations governing listed fish and wildlife permits (50 CFR parts 217–227). The applicant is currently authorized to collect, handle, and tag 800 shortnose sturgeon (*Acipenser brevirostrum*) per year in the Connecticut River, within the boundaries of the State of Connecticut. These sturgeon are captured using gillnets, trammel nets, and trawls; then measured, weighed, sexed when possible, and examined for condition, deformities, and previous tags. All fish that do not already have a PIT tag receive one in the musculature on the left side under the dorsal fin. Ten fish may receive a radio or sonic transmitter. The purpose of the research is to determine current numbers, locations, and movement patterns of shortnose sturgeon within the Connecticut River..

The purpose of the modification request is to test theories and gain information on spawning and migration. This permit expires March 31, 2000, and all numbers listed below are for take authorized annually. The applicant has requested three changes to the permit. First, he wishes to change his take authorization from 800 adult shortnose sturgeon to 400 adult shortnose sturgeon and 100 juvenile shortnose sturgeon. In addition, the applicant wishes to have the authorization to lethally take 150 shortnose sturgeon larvae and 150 shortnose sturgeon eggs. Second, the applicant wishes to increase the number of shortnose sturgeon to be tagged with a radio or sonic transmitter from 10 to 25. Third, the applicant wishes to expand the location of his study on the Connecticut River, to include southern Massachusetts south of the Holyoke Dam.

Those individuals requesting a hearing should set out the specific reasons why a hearing on this particular modification request would be appropriate (see **ADDRESSES**). The holding of such hearing is at the discretion of the Assistant Administrator for Fisheries, NOAA. All statements and opinions contained in this application summary are those of the applicant and do not necessarily reflect the views of NMFS.

Dated: August 29, 1996.

Robert C. Ziobro,

Acting Chief, Endangered Species Division, Office of Protected Resources, National Marine Fisheries Service.

[FR Doc. 96–22725 Filed 9–5–96; 8:45 am]

BILLING CODE 3510–22–F

DEPARTMENT OF DEFENSE

Defense Information Systems Agency

Membership of the Defense Information Systems Agency Senior Executive Service (SES) Performance Review Board (PRB)

AGENCY: Defense Information System Agency, DOD.

ACTION: Notice of membership of the Defense Information Systems Agency Senior Executive Service Performance Review Board.

SUMMARY: This notice announces the appointment of the members of the Performance Review Board of the Defense Information Systems Agency. The publication of membership is required by 5 U.S.C. 4314 (c)(4).

The Performance Review Board provides fair and impartial review of Senior Executive Service Performance appraisals and makes recommendations regarding performance ratings and performance awards to the Director, DISA.

EFFECTIVE DATE: August 27, 1996.

FOR FURTHER INFORMATION CONTACT: Ms. Carrie K. Bazemore, SES Program Manager, Civilian Personnel Division, Personnel and Manpower Directorate, Defense Information Systems Agency (703) 607–4411.

SUPPLEMENTARY INFORMATION: In accordance with 5 U.S.C. 4314(c)(4), the following are names and titles of the executives who have been appointed to serve as members of the SES Performance Review Board. They will serve a one-year renewable term, effective 27 August 1996.

David J. Kelley, Major General, USA
Vice Director, DISA

John W. Meincke, Brig Gen, USAF
Commander, DISA WESTHEM

Diann McCoy
Deputy Director for C41 Programs Directorate

Robert Hutten
Deputy Director for Strategic Plans and Policy

Jack Penkoske,

Chief, Civilian Personnel Division.

[FR Doc. 96–22712 Filed 9–5–96; 8:45 am]

BILLING CODE 3610–55–M

DEPARTMENT OF ENERGY

Morgantown Energy Technology Center; Research Opportunity Announcement (ROA) Applied Research and Development

AGENCY: Morgantown Energy Technology Center, Department of Energy (DOE).

ACTION: Amendment to the Research Opportunity Announcement (ROA) No. DE–RO21–96MC33204.

SUMMARY: The purpose of this notice is to amend the ROA previously published in the Federal Register at 61 FR 19917, May 3, 1996, in order to (1) correct measurements stated in the Characterization, Monitoring, and Sensor Technology needs area; (2) add the receipt date and return address for receipt of proposals; and (3) add the Certificate of ES&H Program document.

ADDRESSES/FOR FURTHER INFORMATION CONTACT: The ROA and an Information Package are available on the Internet at http://www.metc.doe.gov/business/solicita.html. Requests for information concerning the ROA should be submitted in writing to the following address: U.S. Department of Energy, ATTN: Crystal A. Sharp, M.S. I07, Morgantown Energy Technology Center, P.O. Box 880, 3610 Collins Ferry Road, Morgantown, WV, 26507–0880, Phone Number (304) 285–4634, FAX (304) 285–4683, or Internet Address: CSHARP@METC.DOE.GOV.

SUPPLEMENTARY INFORMATION: The ROA DE–RO21–96MC33204 is amended accordingly;

1. Research Opportunity Announcement (ROA), Applied Research and Development, Description of Research Areas; Section 5, Characterization, Monitoring, and Sensor Technology; Paragraph A, High-Level Waste Tank; paragraph 2, sentence 6. The text of the sentence is deleted in its entirety and the following is substituted in lieu thereof:

''Devices and systems for in situ deployment must be capable of performing in a radiation field of 5,000 rad/hr for an accumulated dose of 10^7 rad.''

2. Research Opportunity Announcement (ROA), Applied Research and Development, Description of Research Areas; Section 5, Characterization, Monitoring, and Sensor Technology; Paragraph D, Mixed Waste Characterization, Treatment, and Disposal; subparagraph 2, *Heavy Metal Monitoring* paragraph (c). The text of the paragraph is deleted in its entirety and the following is substituted in lieu thereof:

''Sensitivity at least 5 micro grams/m^3 except for beryllium (0.5 micro grams/m^3), lead (50 micro grams/m^3), and selenium (50 micro grams/m^3). The instrument would be more cost-effective, compact, require little maintenance, and generate no waste.''

3. Research Opportunity Announcement (ROA), Applied Research and Development, Description of Research Areas; Section 5, Characterization, Monitoring, and Sensor Technology; Paragraph D, Mixed Waste Characterization, Treatment, and Disposal; subparagraph 2, *Mercury monitoring* paragraph (c). The text of the paragraph is deleted in its entirety and the following is substituted in lieu thereof:

''Sensitivity of at least 5 micro grams/m^3. It would operate continuously, providing real-time data for control. The instrument would be more cost-effective, compact, require little maintenance, and generate no waste.''

4. Research Opportunity Announcement (ROA), Applied Research and Development, Description of Research Areas; Section 5, Characterization, Monitoring, and Sensor Technology; subparagraph 3(a);

paragraph 3. The text of the paragraph is deleted in its entirety and the following is substituted in lieu thereof:

''DOE facilities are also required to examine mixed waste to verify that the waste has been assigned to the proper matrix parameter category (MPC) and to verify compliance with treatment/disposal facilities waste acceptance criteria (WAC). For example, the WIPP-WAC requires that waste containers be examined to detect the presence of free liquids (residual liquid <1% volume of external container), pressurized containers, and particulates (waste materials shall be immobilized if >1% by weight is particulate material <10 microns in diameter, or if >15% by weight is particulate material <200 microns in diameter). Appropriate MPC assignment is made by determining if the waste material parameters (e.g., glass, metal, plastics) meet the criteria specified in DOE Waste Treatability Group Guidance, DOE/LLW–217, for the assigned MPC.''

5. Date, Time, and Place Proposals are DUE.

Mail Proposals to: U. S. Department of Energy, Morgantown Energy Technology Center, ATTN: Crystal A. Sharp, P. O. Box 880, 3610 Collins Ferry Road, Morgantown, WV 26507–0880.

All proposals are due at 3610 Collins Ferry Road, Morgantown, West Virginia, no later than 2:00 P.M. local prevailing time on May 2, 1997.

6. Information Package, Overall Arrangement of Proposal, Volume I, Section C. Attachment A titled, ''Certificate of ES&H Program'' is hereby made a part of this amendment and incorporated into the Information Package.

Attachment A—Certificate of ES&H Program

(Note: Successful Offerors will be required to execute this certification prior to contract award.)

By signing below, the contractor certifies that they have an Environmental, Safety and Health (ES&H) program which, to the best of their knowledge, is consistent and in accordance with applicable local, State, and Federal laws and regulations, and will take all necessary precautions in the performance of the work under this contract to protect the safety and health of its employees and the public and to prevent damage to property, materials, supplies, equipment, and environmental resources.

Name of Organization: _____

Signature of the Officer: _____

Typed Name and Title of the Officer: _____

_____

Date of Execution: _____

The above certification is a material representation of fact upon which reliance was placed when making an award. If it is later determined that the contractor knowingly rendered an erroneous certification, the Contracting Officer may terminate the contract for default.

James J. Grabulis,

Director, Acquisition and Assistance Division.

[FR Doc. 96–22753 Filed 9–5–96; 8:45 am]

BILLING CODE 6450–01–P

Office of Energy Efficiency and Renewable Energy

[Case No. CW–005]

Energy Conservation Program for Consumer Products: Granting of the Application for Interim Waiver and Publishing of the Petition for Waiver of General Electric Appliances From the DOE Clothes Washer Test Procedure

AGENCY: Office of Energy Efficiency and Renewable Energy, Department of Energy.

ACTION: Notice.

SUMMARY: Today's notice grants an Interim Waiver to General Electric Appliances (GEA) and publishes GEA's Petition for Waiver from the existing Department of Energy (DOE or Department) clothes washer test procedure regarding GEA's clothes washer models YLXR1020T, WLXR1020T and VLXR1020T.

GEA seeks a waiver because its clothes washer models YLXR1020T, WLXR1020T and VLXR1020T have only two temperature selections, a configuration which is not covered in the existing DOE clothes washer test procedure. GEA seeks to test the wash temperature selections by modifying the existing test procedure Temperature Use Factors (TUF's) for a three temperature machine (hot/cold, warm/cold and cold/cold).

DATES: DOE will accept comments, data, and information not later than October 7, 1996.

ADDRESSES: Written comments and statements shall be sent to: Department of Energy, Office of Energy Efficiency and Renewable Energy, Case No. CW–005, Mail Stop EE–43, Room 1J–018, Forrestal Building, 1000 Independence Avenue, SW, Washington, DC, 20585–0121 (202) 586- 7140.

FOR FURTHER INFORMATION CONTACT:

P. Marc LaFrance, U.S. Department of Energy, Office of Energy Efficiency and Renewable Energy, Mail Station EE–431, Forrestal Building, 1000 Independence Avenue, SW., Washington, DC 20585–0121, (202) 586–8423

Eugene Margolis, Esq., U.S. Department of Energy, Office of General Counsel, Mail Station GC–72, Forrestal Building, 1000 Independence Avenue, SW., Washington, DC 20585–0103, (202) 586–9507

SUPPLEMENTARY INFORMATION: The Energy Conservation Program for Consumer Products (other than automobiles) was established pursuant to the Energy Policy and Conservation Act, as amended, (EPCA) 42 USC 6291 *et seq.*, which requires DOE to prescribe standardized test procedures to measure the energy consumption of certain consumer products, including clothes washers. The intent of the test procedures is to provide a comparable measure of energy consumption that will assist consumers in making purchasing decisions. These test procedures appear at Title 10 CFR Part 430, Subpart B.

DOE amended the test procedures rules to provide for a waiver process by adding § 430.27 to Title 10, CFR Part 430. (45 FR 64108, September 26, 1980). Thereafter, DOE further amended the appliance test procedure waiver process to allow the Assistant Secretary for Energy Efficiency and Renewable Energy (Assistant Secretary) to grant an Interim Waiver from test procedure requirements to manufacturers that have petitioned DOE for a waiver from such prescribed test procedures. (51 FR 42823, November 26, 1986).

The waiver process allows the Assistant Secretary to temporarily waive the test procedures for a particular basic model when a petitioner shows that the basic model contains one or more design characteristics which prevent testing according to the prescribed test procedures or when the prescribed test procedures may evaluate the basic model in a manner so unrepresentative of its true energy consumption as to provide materially inaccurate comparative data. Waivers generally remain in effect until final test procedure amendments become effective, resolving the problem that is the subject of the waiver.

The Interim Waiver provisions, added by the 1986 amendment, allow the Assistant Secretary to grant an Interim Waiver when it is determined that the applicant will experience economic hardship if the Application for Interim Waiver is denied, if it appears likely that the Petition for Waiver will be granted, and/or the Assistant Secretary determines that it would be desirable for

public policy reasons to grant immediate relief pending a determination on the Petition for Waiver. An Interim Waiver remains in effect for a period of 180 days or until DOE issues its determination on the Petition for Waiver, whichever is sooner, and may be extended for an additional 180 days, if necessary.

On December 19, 1995, GEA filed a Petition for Waiver and an Application for Interim Waiver regarding its clothes washer models YLXR1020T, WLXR1020T and VLXR1020T. On February 8, 1996, GEA withdrew its Application for Interim Waiver and Petition for Waiver. On March 26, 1996, GEA resubmitted its Application for Interim Waiver and Petition for Waiver for the same model numbers. The GEA clothes washers have only two temperature selections (warm/cold and cold/cold). However, the DOE clothes washer test procedure does not have a provision to test a clothes washer with only two temperature selections.

GEA proposed a test method for its clothes washers which would modify the existing test procedure TUF's for a three temperature machine (hot/cold, warm/cold and cold/cold) found in the existing test procedure at Section 5.3 of Appendix J to Subpart B. GEA's proposal would combine the existing TUF's (proration values) for hot/cold (30 percent) and warm/cold (55 percent) for its warm/cold temperature selection. Furthermore, GEA's proposal would maintain the existing test procedure TUF for a cold/cold temperature selection (15 percent) for its machines. The existing test procedure TUF's are based on old (1970's) consumer usage habits. GEA believes that the TUF's for its two temperature machines should be consistent with the existing test procedure. Thus, the GEA clothes washers would be tested with TUF values of 85 percent for warm/cold and 15 percent for cold/cold.

Discussion of Comments

The Whirlpool Corporation (Whirlpool) provided comments relative to the GEA Interim Waiver Application and Petition for Waiver. Whirlpool stated that it supported the GEA request and indicated that both the Interim Waiver and Petition for Waiver should be granted.

The Speed Queen Company (Speed Queen) also commented on the GEA Interim Waiver Application and Petition for Waiver. Speed Queen stated that it supported the GEA proposed test methodology.

GEA provided justification for an Interim Waiver based on the likely approval of the Petition for Waiver. GEA stated that the Petition for Waiver is likely to be granted because the test procedure proposed is very conservative, and to the best of its knowledge is the current practice in the industry.

The Department agrees with GEA that the Petition for Waiver is likely to be granted. The GEA clothes washer should be tested on the same basis as other models on the market. The waiver should use TUF's that are consistent with the old consumer usage habits rather than reflecting current consumer habits. The test procedure has TUF's for three, four, five and six temperature machines which are used to prorate energy consumption among the various temperature selections. The current clothes washer test procedure specifies a TUF value of 15 percent for a cold wash/cold rinse temperature selection. This is consistent for all of the various multiple temperature selection clothes washers. Therefore, any remaining heated temperature selection should be tested with a TUF value of 85 percent. Furthermore, the Department has received comment supporting this test methodology.

Therefore, based on the likely approval of the Petition for Waiver, the Department grants GEA an Interim Waiver from the DOE test procedures for GEA's clothes washer models YLXR1020T, WLXR1020T and VLXR1020T. GEA shall be permitted to test its clothes washers on the basis of the test procedures specified in Title 10 CFR Part 430, Subpart B, Appendix J, with the following modifications:

(i) Add new section, 5.4 in Appendix J to read as follows:

5.4 Two temperature selection (n=2)

Wash/rinse temperature setting	Temperature use factor (TUF)
Heated/cold	0.85
Cold/cold	0.15

This Interim Waiver is based upon the presumed validity of statements and all allegations submitted by GEA. This Interim Waiver may be revoked or modified at any time upon a determination that the factual basis underlying the Application is incorrect.

This Interim Waiver is effective on the date of issuance by the Assistant Secretary for the Office of Energy Efficiency and Renewable Energy. This Interim Waiver shall remain in effect for a period of 180 days, or until the Department acts on the Petition for Waiver, whichever is sooner, and may be extended for an additional 180-day period, if necessary.

Pursuant to paragraph (b) of Title 10 CFR 430.27, DOE is hereby publishing the ''Petition for Waiver'' in its entirety. The petition contains no confidential information. DOE would appreciate comments, data and other information regarding the petition discussed above.

Issued in Washington, DC, August 29, 1996.

Robert L. SanMartin,

Director of Scientific Initiatives, Energy Efficiency and Renewable Energy.

March 26, 1996.

Assistant Secretary,

Conservation and Renewable Energy, United States Department of Energy, Forrestal Building, 1000 Independence Avenue SW., Washington, DC 20585.

RE: Application for Interim Waiver and Petition for Waiver, Appendix J, Subpart B CFR part 430, Test Method for Clothes Washers with Two Temperatures.

Dear Assistant Secretary:

This Application for Interim Waiver and Petition for Waiver is submitted pursuant to Title 10 CFR 430.27, which provides for modification of test method because of design characteristics preventing testing or producing data unrepresentative of a covered product's true energy consumption characteristics.

GE Appliances (GEA) is introducing a new model with two temperature selections. The model numbers are YLXR1020T, WLXR1020T, and VLXR1020T. The existing Appendix J test method does not provide a Temperature Usage Factor for a two temperature machine.

Other manufacturers who incorporate similar designs are Whirlpool (model #LBR2121D) and Frigidaire/White Westinghouse (models #MWX121RB/#MWL111RBW). There is also a Kenmore model #15122 with two temperature settings.

GEA requests an Interim Waiver and Waiver to allow testing of the machine per Appendix J with the following modifications:

Add Section 5.4 Two temperature selection (n=2).

Wash/rinse temperature setting	TUF
Warm/cold	.85
Cold/cold	.15

The reasons why these TUF's are suggested are:

(1) The three temperature TUF is Hot/cold .30, Warm/cold .55, and Cold/cold .15. Adding the Hot/cold and Warm/cold TUF's together yields .85. One might assume, conservatively, that if only Warm were available, it would be used 85% of the time.

(2) The test procedures for Canada prescribe the TUF's above.

(3) The AHAM proposed test procedure, based on 1994 data, is less conservative. It uses TUF's of .64 for Warm/cold and .36 for Cold/cold.

GEA requests immediate relief by grant of the proposed Interim Waiver, justified by the following reason:

Likely Approval of Waiver—The Petition for Waiver is likely to be granted because the

test procedure proposed is very conservative, even more so than the new test procedure supported by AHAM, and to the best of our knowledge is the current practice in the industry. Thank you for considering this petition.

Jane Ransdell,

Energy Standards Engineer.

cc: Earl Jones

[FR Doc. 96–22754 Filed 9–5–96; 8:45 am]

BILLING CODE 6450–01–P

Federal Energy Regulatory Commission

[Docket No. RP96–349–000]

Colorado Interstate Gas Company; Notice of Section 4 Filing

August 30, 1996.

Take notice that on August 27, 1996, Colorado Interstate Gas Company (CIG) tendered for filing pursuant to Section 4 of the Natural Gas Act, a notice of termination of gathering services which CIG currently provides on gathering facilities that the Commission has authorized to be transfer to its affiliate, CIG Field Service Company.[1] CIG states that the termination of service does not apply to gathering services provided by CIG using its Panhandle Field Gathering System in Potter, Moore, Hutchinson, Carson, Hartley, and Oldham Counties, Texas.

Any person desiring to be heard or to protest said filing should file a motion to intervene or protest with the Federal Energy Regulatory Commission, 888 First Street, N.E., Washington, D.C., 20426, in accordance with Rules 211 and 214 of the Commission's Rules of Practice and Procedure. All such motions or protests should be filed on or before September 9, 1996. Protests will be considered by the Commission in determining the appropriate action to be taken, but will not serve to make protestants parties to the proceeding. Any person wishing to become a party must file a motion to intervene. Copies of this filing are on file with the Commission and are available for public inspection.

Lois D. Cashell,

Secretary.

[FR Doc. 96–22735 Filed 9–5–96; 8:45 am]

BILLING CODE 6717–01–M

[1] Pursuant to authorization issued in Docket No. CP96–41–000, *et al.*, 75 FERC ¶61,324 (1996), the Commission authorized CIG to transfer a substantial portion of its gathering facilities and operation to CIG Field Services Company.

[Docket No. CP96–749–000]

Columbia Gas Transmission Corporation; Notice of Request Under Blanket Authorization

August 30, 1996.

Take notice that on August 27, 1996, Columbia Gas Transmission Corporation (Columbia), 1700 MacCorkle Avenue, S.E., Charleston, West Virginia 25314–1599, filed in Docket No. CP96–749–000 a request pursuant to Sections 157.205 and 157.212 of the Commission's Regulations under the Natural Gas Act (18 CFR 157.205, 157.212) for authorization to construct and operate a new point of delivery in Southampton County, Virginia, under Columbia's blanket certificate issued in Docket No. CP83–76–000 pursuant to Section 7 of the Natural Gas Act, all as more fully set forth in the request that is on file with the Commission and open to public inspection.

Columbia proposes to construct and operate a new point of delivery. The new delivery point has been requested by Commonwealth Gas Services, Inc. for additional firm transportation service for commercial service. Columbia states that there will be no impact on its existing peak day obligation to its other customers.

Any person or the Commission's staff may, within 45 days after issuance of the instant notice by the Commission, file pursuant to Rule 214 of the Commission's Procedural Rules (18 CFR 385.214) a motion to intervene or notice of intervention and pursuant to Section 157.205 of the Regulations under the Natural Gas Act (18 CFR 157.205) a protest to the request. If no protest is filed within the time allowed therefor, the proposed activity shall be deemed to be authorized effective the day after the time allowed for filing a protest. If a protest is filed and not withdrawn within 30 days after the time allowed for filing a protest, the instant request shall be treated as an application for authorization pursuant to Section 7 of the Natural Gas Act.

Lois D. Cashell,

Secretary.

[FR Doc. 96–22732 Filed 9–5–96; 8:45 am]

BILLING CODE 6717–01–M

[Docket No. TM97–1–23–000]

Eastern Shore Natural Gas Company; Notice of Tariff Filing

August 30, 1996.

Take notice that on August 27, 1996, Eastern Shore Natural Gas Company (Eastern Shore) tendered for filing revised tariff sheets to its FERC Gas Tariff, First Revised Volume No. 1. Such proposed tariff sheets are proposed to be effective October 1, 1996.

Eastern Shore states that the purpose of the filing is to reflect a decrease in the Annual Charge Adjustment (ACA) Charge in the commodity portion of Eastern Shore's sales and transportation rates. Pursuant to Order No. 472, the Commission has assessed Eastern Shore its ACA unit rate of $0.0020 per Mcf ($0.0019 per dt on Eastern Shore's system) for the annual period commencing October 1, 1996.

Eastern Shore states that copies of the filing are being mailed to affected customers and interested State Commissions.

Any person desiring to be heard or to protest said filing should file a motion to intervene or protest with the Federal Energy Regulatory Commission, 888 First Street, N.E., Washington, D.C. 20426, in accordance with Sections 385.214 and 385.211 of the Commission's Rules and Regulations. All such motions or protests must be filed as provided in Section 154.210 of the Commission's Regulations. Protests will be considered by the Commission in determining the appropriate action to be taken, but will not serve to make protestants parties to the proceeding. Any person wishing to become a party must file a motion to intervene. Copies of this filing are on file with the Commission and are available for public inspection in the Public Reference Room.

Lois D. Cashell,

Secretary.

[FR Doc. 96–22728 Filed 9–5–96; 8:45 am]

BILLING CODE 6717–01–M

[Docket No. TM97–2–23–000]

Eastern Shore Natural Gas Company; Notice of Tariff Filing

August 30, 1996.

Take notice that on August 27, 1996 Eastern Shore Natural Gas Company (Eastern Shore) tendered for filing certain revised tariff sheets to its FERC Gas Tariff, First Revised Volume No. 1. Such proposed tariff sheets are proposed to be effective October 1, 1996.

Eastern Shore states that the purpose of the filing is to track the coast of storage service purchased from Columbia Gas Transmission Corporation under their Rate Schedules FSS and SST, the costs of which are included in the rates payable under Eastern Shore's Rate Schedules CWS and CFSS, respectively.

Eastern Shore states that copies of the filing are being mailed to affected customers and interested State Commissions.

Any person desiring to be heard or to protest said filing should file a motion to intervene or protest with the Federal Energy Regulatory Commission, 888 First Street, NE., Washington, DC 20426, in accordance with Sections 385.214 and 385.211 of the Commission's Rules and Regulations. All such motions or protests must be filed as provided in Section 154.210 of the Commission's Regulations. Protests will be considered by the Commission in determining the appropriate action to be taken, but will not serve to make protestants parties to the proceeding. Any person wishing to become a party must file a motion to intervene. Copies of this filing are on file with the Commission and are available for public inspection in the Public Reference Room.

Lois D. Cashell,

Secretary.

[FR Doc. 96–22737 Filed 9–5–96; 8:45 am]

BILLING CODE 6717–01–M

[Docket No. CP96–738–000]

Koch Gateway Pipeline Company; Notice of Request Under Blanket Authorization

August 30, 1996.

Take notice that on August 22, 1996, Koch Gateway Pipeline Company (Koch), 600 Travis Street, Houston, Texas 77251–1478 filed in Docket No. CP96–738–000 a request pursuant to Sections 157.205, and 157.216(b) of the Commission's Regulations under the Natural Gas Act (18 CFR 157.205 and 157.216) for approval and permission to abandon by sale in place approximately 2,028 feet of two-inch pipeline and abandon by removal approximately 200 feet of two-inch pipeline and a meter station, under the blanket certificate issued in Docket No. CP82–430–000, pursuant to Section 7(b) of the Natural Gas Act (NGA), all as more fully set forth in the request which is on file with the Commission and open to public inspection.

Koch states that it proposes to abandon facilities that were originally certificated in Docket No. G–8230 for use to an end-user, Fernwood Industries (Fernwood) and are located within Pike County, Mississippi. Koch further states that Fernwood agrees to the proposed abandonment.

Any person or Commission Staff may, within 45 days of the issuance of the instant notice by the Commission, file pursuant to Rule 214 of the Commission's Rules of Practice and Procedure (18 CFR 385.214), a motion to intervene and pursuant to Section 157.205 of the regulations under the Natural Gas Act (18 CFR 157.205), a protest to the request. If no protest is filed within the time allowed therefor, the proposed activities shall be deemed to be authorized effective the day after the time allowed for filing a protest. If a protest is filed and not withdrawn 30 days after the time allowed for filing a protest, the instant request shall be treated as an application for authorization pursuant to Section 7 of the Natural Gas Act.

Lois D. Cashell,

Secretary.

[FR Doc. 96–22729 Filed 9–5–96; 8:45 am]

BILLING CODE 6717–01–M

[Docket No. CP96–747–000]

Northern Natural Gas Company; Notice of Request Under Blanket Authorization

August 30, 1996.

Take notice that on August 27, 1996, Northern Natural Gas Company (Applicant), P.O. Box 3330, Omaha, Nebraska 68103–0330, filed in Docket No. CP96–747–000 a request pursuant to Sections 157.205 and 157.212 of the Commission's Regulations under the Natural Gas Act for authorization to construct and operate a new delivery point, under blanket certificate issued in Docket No. CP82–401–000,[1] all as more fully set forth in the request for authorization on file with the Commission and open for public inspection.

Applicant proposes to construct a new delivery point to accommodate natural gas deliveries to Emmetsburg Municipal Gas Works (Emmetsburg), a local distribution company, for redelivery to AG Processing Inc. (AGP) at their new facility located in Palo Alto County, Iowa. Applicant states that the new delivery point will accommodate natural gas deliveries for industrial consumption under its existing transportation rate schedules and service agreements. Applicant holds a blanket transportation certificate pursuant to Part 284 of the Commission's Regulations issued in Docket No. CP86–435–000.[2] The estimated total volume proposed to be delivered is expected to result in an increase in Applicant's peak day deliveries of 3,350 Mcf per day and 796,000 Mcf on an annual basis.

The estimated cost to install the delivery point is $74,000. Applicant states that Emmetsburg will reimburse Applicant for the cost of these facilities. Applicant states that construction of the proposed delivery point is not prohibited by its existing tariff and that it has sufficient capacity to accommodate the service proposed herein without determent or disadvantage to Applicant's other customers.

Any person or the Commission's staff may, within 45 days after issuance of the instant notice by the Commission, file pursuant to Rule 214 of the Commission's Procedural Rules (18 CFR 385.214) a motion to intervene or notice of intervention and pursuant to Section 157.205 of the Regulations under the Natural Gas Act (18 CFR 157.205) a protest to the request. If no protest is filed within the time allowed therefor, the proposed activity shall be deemed to be authorized effective the day after the time allowed for filing a protest. If a protest is filed and not withdrawn within 30 days after the time allowed for filing a protest, the instant request shall be treated as an application for authorization pursuant to Section 7 of the Natural Gas Act.

Lois D. Cashell,

Secretary.

[FR Doc. 96–22731 Filed 9–5–96; 8:45 am]

BILLING CODE 6717–01–M

[Docket No. RP95–185–014]

Northern Natural Gas Company; Notice of Proposed Changes in FERC Gas Tariff

August 30, 1996.

Take notice that on August 27, 1996, Northern Natural Gas Company (Northern), tendered for filing to become part of Northern's FERC Gas Tariff, the following tariff sheets proposed to be effective September 1, 1996:

Fifth Revised Volume No. 1

24 Revised Sheet No. 50
24 Revised Sheet No. 51
Tenth Revised Sheet No. 52
1 Revised 30 Revised Sheet No. 53
Second Revised Sheet No. 54
Second Revised Sheet No. 55
Tenth Revised Sheet No. 59
Eleventh Revised Sheet No. 60
Second Revised Sheet No. 61
Second Revised Sheet No. 62
Second Revised Sheet No. 63
Second Revised Sheet No. 64
Second Revised Sheet No. 100
Third Revised Sheet No. 101
Second Revised Sheet No. 103
Second Revised Sheet No. 106

---

[1] *See*, 20 FERC ¶ 62,410 (1982).

[2] *See*, 37 FERC ¶ 61,268 (1986).

Second Revised Sheet No. 114
Second Revised Sheet No. 115
Third Revised Sheet No. 206
Second Revised Sheet No. 255
Second Revised Sheet No. 265
Third Revised Sheet No. 401

Original Volume No. 2

150 Revised Sheet No. 1C
25 Revised Sheet No. 1C.a

Northern states that its filing contains Northern's proposal to implement, on an interim basis until a final Commission order on Northern's Settlement is issued, the Settlement rates in Docket No. RP95–185 effective September 1, 1996. Northern further states that its filing is contingent on final Commission approval of the filing without modification.

Northern states that copies of the filing were served upon the company's customers and interested State Commissions.

Any person desiring to protest said filing should file a protest with the Federal Energy Regulatory Commission, 888 First Street NE., Washington, DC 20426, in accordance with Section 385.211 of the Commission's Rules and Regulations. All such protests must be filed as provided in Section 154.210 of the Commission's Regulations. All protests will be considered by the Commission in determining the appropriate action to be taken in this proceeding, but will not serve to make Protestant a party to the proceeding. Copies of this filing are on file with the Commission and are available for inspection.

Lois D. Cashell,

Secretary.

[FR Doc. 96–22734 Filed 9–5–96; 8:45 am]

BILLING CODE 6717–01–M

[Docket Nos. EL96–70–000; QF84–329–001]

Pacific Gas & Electric Company v. Red Top Cogeneration, L.P.; Errata to Notice of Filing

August 30, 1996.

The Notice of Filing issued in the above-referenced dockets on August 20, 1996 (61 FR 43757, August 26, 1996), should be replaced in its entirety with the following language:

Take notice that on August 7, 1996, Pacific Gas & Electric Company (PG&E) tendered for filing a Motion for revocation of certification of Red Top Cogeneration, L.P. Facility, as a qualifying cogeneration facility. PG&E alleges that Red Top Cogeneration, L.P. has failed to meet the Commission's operating and efficiency standards.

Any person desiring to be heard or to protest said filing should file a motion to intervene or protest with the Federal Energy Regulatory Commission, 888 First Street, N.E., Washington, D.C. 20426, in accordance with Rules 211 and 214 of the Commission's Rules of Practice and Procedure (18 CFR 385.211 and 18 CFR 385.214). All such motions or protests should be filed on or before September 20, 1996. Protests will be considered by the Commission in determining the appropriate action to be taken, but will not serve to make protestants parties to the proceeding. Any person wishing to become a party must file a motion to intervene. Copies of this filing are on file with the Commission and are available for public inspection.

Lois D. Cashell,

Secretary.

[FR Doc. 96–22727 Filed 9–5–96; 8:45 am]

BILLING CODE 6717–01–M

[Docket No. CP96–740–000]

Pacific Gas Transmission Company; Notice of Request Under Blanket Authorization

August 30, 1996.

Take notice that on August 23, 1996, Pacific Gas Transmission Company (PGT), 2100 Southwest River Parkway, Portland, Oregon 97201, filed in Docket No. CP96–740–000 a request pursuant to Sections 157.205 and 157.211 of the Commission's Regulations under the Natural Gas Act (18 CFR 157.205, 157.211) for authorization to install a new tap and meter set near Bend, Oregon (the ''South Bend Meter Station'') for delivery of gas to Cascade Natural Gas Corporation, under PGT's blanket certificate issued in Docket No. CP82–530–000 pursuant to Section 7 of the Natural Gas Act, all as more fully set forth in the request that is on file with the Commission and open to public inspection.

PGT proposes to construct a 2-inch tap and meter set and appurtenant facilities in order to provide Cascade with a supplemental source to serve Cascade's existing load in the south Bend area and anticipated future load growth.

PGT states that the new tap and meter set is not prohibited by its existing tariff and that it has sufficient capacity to accomplish deliveries without detriment or disadvantage to other customers. The new tap and meter set will not have an effect on PGT's peak day and annual deliveries and the total volumes delivered will not exceed total volumes authorized prior to this request.

Any person or the Commission's staff may, within 45 days after issuance of the instant notice by the Commission, file pursuant to Rule 214 of the Commission's Procedural Rules (18 CFR 385.214) a motion to intervene or notice of intervention and pursuant to Section 157.205 of the Regulations under the Natural Gas Act (18 CFR 157.205) a protest to the request. If no protest is filed within the time allowed therefor, the proposed activity shall be deemed to be authorized effective the day after the time allowed for filing a protest. If a protest is filed and not withdrawn within 30 days after the time allowed for filing a protest, the instant request shall be treated as an application for authorization pursuant to Section 7 of the Natural Gas Act.

Lois D. Cashell,

Secretary.

[FR Doc. 96–22730 Filed 9–5–96; 8:45 am]

BILLING CODE 6717–01–M

[Project No. 2984–025]

S.D. Warren Company; Notice of Settlement Offer

August 30, 1996.

On August 22, 1996, the State of Maine, Departments of Environmental Protection, Conservation, and Inland Fisheries & Wildlife (Maine) filed comments in the above-captioned proceeding, with an attached ''compromise'' water level management plan for Sebago Lake in lieu of that previously proposed by S.D. Warren Company, licensee of the Eel Weir Hydroelectric Project No. 2984. Maine states that the compromise plan was agreed to by all parties at a meeting in Augusta, Maine, on August 12, 1996. Although Maine is not an intervenor in this proceeding, it has been an active participant, and its filing will be treated as an offer of settlement under Rule 602 of the Commission's Rules of Practice and Procedure, 18 CFR 385.602.

Comments on the proposed settlement may be filed with the Commission by no later than September 18, 1996, and replies by no later than September 30, 1996. Copies of comments and replies by parties and intervenors must be served on all other parties and intervenors, as well as Maine. Under Rule 602(f)(3), a failure to file comments constitutes a waiver of all objections to the offer of settlement.

Lois D. Cashell,

Secretary.

[FR Doc. 96–22733 Filed 9–5–96; 8:45 am]

BILLING CODE 6717–01–M

[Docket No. TM97–1–17–000]

Texas Eastern Transmission Corporation; Notice of Proposed Changes in FERC Gas Tariff

August 30, 1996.

Take notice that on August 27, 1996, Texas Eastern Transmission Corporation (Texas Eastern) tendered for filing as part of its FERC Gas Tariff, Sixth Revised Volume No. 1 and Original Volume No. 2, the revised tariff sheets listed on Appendix A of the filing, to become effective October 1, 1996.

Texas Eastern states that the purpose of this filing is to permit the tracking of the ACA Unit Surcharge authorized by the Commission to be applied to rates in fiscal year 1997 for recovery of the Annual Charge for fiscal year 1996. The ACA Unit Surcharge authorized by the Commission for fiscal year 1997 is $0.0020 per MCF, $0.0020 per Dth converted to Texas Eastern's measurement basis.

Texas Eastern states that copies of the filing were served on firm customers of Texas Eastern, interested state commissions, and all current interruptible customers.

Any person desiring to be heard or to protest this filing should file a motion to intervene or protest with the Federal Energy Regulatory Commission, 888 First Street, N.E., Washington, DC 20426, in accordance with Sections 385.214 and 385.211 of the Commission's Rules and Regulations. All such motions or protests must be filed as provided in Section 154.210 of the Commission's Regulations. Protests will be considered by the Commission in determining the appropriate action to be taken, but will not serve to make protestants parties to the proceeding. Any person wishing to become a party must file a motion to intervene. Copies of this filing are on file with the Commission and are available for public inspection in the Public Reference Room.

Lois D. Cashell,

Secretary.

[FR Doc. 96–22736 Filed 9–5–96; 8:45 am]

BILLING CODE 6717–01–M

[Docket No. ER96–2760–000, et al.]

Carolina Power & Light Company, et al.; Electric Rate and Corporate Regulation Filings

August 29, 1996.

Take notice that the following filings have been made with the Commission:

1. Carolina Power & Light Company

[Docket No. ER96–2760–000]

Take notice that on August 20, 1996, Carolina Power & Light Company (CP&L), tendered for filing separate Service Agreements executed between CP&L and the following Eligible Transmission Customers: PECO Energy Company, Sonat Power Marketing, Inc., SCANA Energy Marketing, Inc., ENRON Power Marketing, Inc., and Virginia Electric and Power Company. Service to each Eligible Customer will be in accordance with the terms and conditions of Carolina Power & Light Company's Open Access Transmission Tariff.

Copies of the filing were served upon the North Carolina Utilities Commission and the South Carolina Public Service Commission.

Comment date: September 12, 1996, in accordance with Standard Paragraph E at the end of this notice.

2. Jersey Central Power & Light Company Metropolitan Edison Company Pennsylvania Electric Company

[Docket No. ER96–2253–000]

Take notice that on August 20, 1996, GPU Service Corporation (GPU), on behalf of Jersey Central Power & Light Company, Metropolitan Edison Company and Pennsylvania Electric Company, filed an amendment to its filing in this proceeding. GPU has served copies of the filing on regulatory agencies in New Jersey and Pennsylvania.

Comment date: September 12, 1996, in accordance with Standard Paragraph E at the end of this notice.

3. Carolina Power & Light Company

[Docket No. ER96–2761–000]

Take notice that on August 20, 1996, Carolina Power & Light Company (Carolina), tendered for filing separate Service Agreements executed between Carolina and the following Eligible Entities: PacifiCorp Power Marketing, Inc. and Vastar Power Marketing, Inc. Service to each Eligible Entity will be in accordance with the terms and conditions of Carolina's Tariff No. 1 for Sales of Capacity and Energy.

Copies of the filing were served upon the North Carolina Utilities Commission and the South Carolina Public Service Commission.

Comment date: September 12, 1996, in accordance with Standard Paragraph E at the end of this notice.

4. Houston Lighting & Power Company

[Docket No. ER96–2762–000]

Take notice that on August 19, 1996, Houston Lighting & Power Company (HL&P), tendered for filing an executed transmission service agreement (TSA) with DuPont Power Marketing, Inc. (DuPont) for Economy Energy Transmission Service under HL&P's FERC Electric Tariff, Original Volume No. 1, for Transmission Service To, From and Over Certain HVDC Interconnections. HL&P has requested an effective date of July 29, 1996.

Copies of the filing were served on DuPont and the Public Utility Commission of Texas.

Comment date: September 12, 1996, in accordance with Standard Paragraph E at the end of this notice.

5. UtiliCorp United Inc.

[Docket No. ER96–2763–000]

Take notice that on August 19, 1996, UtiliCorp United Inc., tendered for filing on behalf of its operating division, WestPlains Energy-Kansas, a Service Agreement under its Power Sales Tariff, FERC Electric Tariff Original Volume No. 12, with *VTEC Energy Inc.* The Service Agreement provides for the sale of capacity and energy by WestPlains Energy-Kansas to *VTEC Energy Inc.* pursuant to the tariff, and for the sale of capacity and energy by *VTEC Energy Inc.* to WestPlains Energy-Kansas pursuant to *VTEC Energy Inc.'s* Rate Schedule No. 1.

UtiliCorp also has tendered for filing a Certificate of Concurrence by *VTEC Energy Inc.*

UtiliCorp requests waiver of the Commission's regulations to permit the Service Agreement to become effective in accordance with its terms.

Comment date: September 12, 1996, in accordance with Standard Paragraph E at the end of this notice.

6. UtiliCorp United Inc.

[Docket No. ER96–2764–000]

Take notice that on August 19, 1996, UtiliCorp United Inc., tendered for filing on behalf of its operating division, Missouri Public Service, a Service Agreement under its Power Sales Tariff, FERC Electric Tariff Original Volume No. 10, with *VTEC Energy Inc.* The Service Agreement provides for the sale of capacity and energy by Missouri Public Service to *VTEC Energy Inc.* pursuant to the tariff, and for the sale of capacity and energy by *VTEC Energy Inc.* to Missouri Public Service pursuant to *VTEC Energy Inc.'s* Rate Schedule No. 1.

UtiliCorp also has tendered for filing a Certificate of Concurrence by *VTEC Energy Inc.*

UtiliCorp requests waiver of the Commission's regulations to permit the Service Agreement to become effective in accordance with its terms.

Comment date: September 12, 1996, in accordance with Standard Paragraph E at the end of this notice.

7. Cinergy Services, Inc.

[Docket No. ER96–2765–000]

Take notice that on August 19, 1996, Cinergy Services, Inc. (Cinergy), tendered for filing a service agreement under Cinergy's Open Access Transmission Service Tariff (the Tariff) entered into between Cinergy and PanEnergy Power Services, Inc.

Comment date: September 12, 1996, in accordance with Standard Paragraph E at the end of this notice.

8. Kentucky Utilities Company

[Docket No. ER96–2766–000]

Take notice that on August 19, 1996, Kentucky Utilities Company (KU), tendered for filing service agreements between KU and Duke/Louis Dreyfus L.L.C. under its TS Tariff and between KU and AIG Trading Corporation under its PS Tariff. KU requests effective dates of July 26, 1996 and July 31, 1996, respectively.

Comment date: September 12, 1996, in accordance with Standard Paragraph E at the end of this notice.

9. South Carolina Electric & Gas Company

[Docket No. ER96–2768–000]

Take notice that on August 19, 1996, South Carolina Electric & Gas Company (SCE&G), tendered for filing proposed changes to its negotiated market sales tariff. SCE&G requests that the changes be placed into effect no later than 60 days after the date of tender.

Comment date: September 12, 1996, in accordance with Standard Paragraph E at the end of this notice.

10. Public Service Company of Colorado

[Docket No. ER96–2769–000]

Take notice that on August 20, 1996, Public Service Company of Colorado (Public Service), tendered for filing revisions to Exhibits 1 and 19 to its Consolidated Facility Arrangements Contract No. 87–LAO–337, with the Western Area Power Administration. Specifically Public Service is submitting Revision No. 1 to Exhibit 1 and Revision No. 1 to Exhibit 19 to Contract No. 87–LAO–337 designated as Public Service Rate Schedule FERC No. 47.

Comment date: September 12, 1996, in accordance with Standard Paragraph E at the end of this notice.

11. Idaho Power Company

[Docket No. ER96–2771–000]

Take notice that on August 20, 1996, Idaho Power Company (IPC), tendered for filing with the Federal Energy Regulatory Commission a Service Agreement under Idaho Power Company FERC Electric Tariff, Second Revised, Volume No. 1 between the City of Richland and Idaho Power Company.

Comment date: September 12, 1996, in accordance with Standard Paragraph E at the end of this notice.

12. Southwestern Public Service Company

[Docket No. ER96–2772–000]

Take notice that on August 21, 1996, Southwestern Public Service Company (Southwestern), submitted an executed service agreement under its point-to-point transmission tariff with Missouri Public Service Company (MPS). The service agreement is for umbrella non-firm transmission service.

Comment date: September 12, 1996, in accordance with Standard Paragraph E at the end of this notice.

13. Arizona Public Service Company

[Docket No. ER96–2773–000]

Take notice that on August 21, 1996, Arizona Public Service Company (APS), tendered for filing the proposed Facilities Agreement between APS and Tohono O'odham Utility Authority (TOUA).

The agreement proposes that APS construct, upgrade, operate and maintain certain facilities necessary to serve TOUA's additional electric service requirements on the Reservation.

A copy of this filing has been served on TOUA and the Arizona Corporation Commission.

Comment date: September 12, 1996, in accordance with Standard Paragraph E at the end of this notice.

14. IES Utilities Inc.

[Docket No. ER96–2774–000]

Take notice that on August 21, 1996, IES Utilities Inc. (IES), tendered for filing proposed changes to modify the IES and Central Iowa Power Cooperative (CIPCO) Operating and Transmission Agreement (Agreement) by the addition of Appendix 13.

Copies of the filing were served upon CIPCO and the Iowa State Utilities Board.

Comment date: September 12, 1996, in accordance with Standard Paragraph E at the end of this notice.

15. Northern Indiana Public Service Company

[Docket No. ER96–2775–000]

Take notice that on August 21, 1996, Northern Indiana Public Service Company, tendered for filing an executed Service Agreement between Northern Indiana Public Service Company and PanEnergy Power Services, Inc.

Under the Service Agreement, Northern Indiana Public Service Company agrees to provide services to PanEnergy Power Services, Inc. under Northern Indiana Public Service Company's Power Sales Tariff, which was accepting for filing by the Commission and made effective by Order dated August 17, 1995 in Docket No. ER95–1222–000. Northern Indiana Public Service Company and PanEnergy Power Services, Inc. request a waiver of the Commission's sixty-day notice requirement to permit an effective date of October 1, 1996.

Copies of this filing have been sent to the Indiana Utility Regulatory Commission and the Indiana Office of Utility Consumer Counselor.

Comment date: September 12, 1996, in accordance with Standard Paragraph E at the end of this notice.

16. Commonwealth Edison Company, Commonwealth Edison Company of Indiana, Inc.

[Docket No. ER96–2776–000]

Take notice that on August 20, 1996, Commonwealth Edison Company and Commonwealth Edison Company of Indiana, Inc. (ComEd), tendered for filing revisions to ComEd's Open Access Transmission Service Tariff filed on July 9, 1996 (Tariff) in Docket No. OA96–166–000.

ComEd requests an effective date of July 9, 1996 and has therefore requested that the Commission waive the Commission's notice requirement. Copies of this filing have been served on all persons that have moved to intervene in Docket Nos. OA96–166–000 and OA96–84–000.

Comment date: September 12, 1996, in accordance with Standard Paragraph E at the end of this notice.

17. New England Power Company

[Docket No. ER96–2777–000]

Take notice that on August 22, 1996, New England Power Company, filed a Service Agreement with Cinergy Services Inc. under NEP's FERC Electric Tariff, Original Volume No. 5.

Comment date: September 12, 1996, in accordance with Standard Paragraph E at the end of this notice.

18. Union Electric Company

[Docket No. ER96–2778–000]

Take notice that on August 22, 1996, Union Electric Company (UE), tendered for filing an Interchange Agreement dated August 13, 1996, between UE and Jacksonville Electric Authority. UE asserts that the purpose of the Agreement is to set out specific rates, terms, and conditions for the types of power and energy to be exchanged.

Comment date: September 12, 1996, in accordance with Standard Paragraph E at the end of this notice.

19. Union Electric Company

[Docket No. ER96–2779–000]

Take notice that on August 22, 1996, Union Electric Company (UE), tendered for filing a Service Agreement for Non-Firm Point-to-Point Transmission Service dated August 19, 1996 between Federal Energy Sales, Inc. (FES) and UE. UE asserts that the purpose of the Agreement is to permit UE to provide transmission service to FES pursuant to UE's Open Access Transmission Tariff filed in Docket No. OA96–50–000.

Comment date: September 12, 1996, in accordance with Standard Paragraph E at the end of this notice.

20. Union Electric Company

[Docket No. ER96–2780–000]

Take notice that on August 22, 1996, Union Electric Company (UE), tendered for filing an unexecuted Service Agreement for Non-Firm Point-to-Point Transmission Service between Commonwealth Edison Company (CE) and UE. UE asserts that the purpose of the Agreement is to permit UE, to provide transmission service to CE pursuant to UE's Open Access Transmission Tariff filed in Docket No. OA96–50.

Comment date: September 12, 1996, in accordance with Standard Paragraph E at the end of this notice.

21. UtiliCorp United Inc.

[Docket No. ES96–39–000]

Take notice that on August 28, 1996, UtiliCorp United Inc. (UtiliCorp) filed an application, under § 204 of the Federal Power Act, seeking authorization to enter into five-year corporate guarantees in an amount of not more than $270 million to replace existing corporate guarantees authorized in Docket No. ES96–5–000.[1]

Also, UtiliCorp requests an exemption from the Commission's competitive bidding or negotiated placement requirements.

[1] 73 FERC ¶ 62,175 (1995).

Comment date: September 18, 1996, in accordance with Standard Paragraph E at the end of this notice.

Standard Paragraph

E. Any person desiring to be heard or to protest said filing should file a motion to intervene or protest with the Federal Energy Regulatory Commission, 888 First Street, N.E., Washington, D.C. 20426, in accordance with Rules 211 and 214 of the Commission's Rules of Practice and Procedure (18 CFR 385.211 and 18 CFR 385.214). All such motions or protests should be filed on or before the comment date. Protests will be considered by the Commission in determining the appropriate action to be taken, but will not serve to make protestants parties to the proceeding. Any person wishing to become a party must file a motion to intervene. Copies of this filing are on file with the Commission and are available for public inspection.

Lois D. Cashell,

Secretary.

[FR Doc. 96–22767 Filed 9–5–96; 8:45 am]

BILLING CODE 6717–01–P

[Project No. 2365–011]

Madison Paper Industries; Notice of Availability of Final Environmental Assessment

August 30, 1996.

A final environmental assessment (FEA) is available for public review. The FEA is for an application to amend the Anson Hydroelectric Project. The application is to resurface the dam; reconfigure the permanent crest; raising the elevation from 241.67′ to 242.62′ (except for a 50-ft section which will be lowered to 242.62′) in order to accept an inflatable flashboard system; and install an inflatable flashboard system, raising the normal headpond elevation by 1.5 feet. The FEA finds that approval of the application would not constitute a major federal action significantly affecting the quality of the human environment. The Anson Hydroelectric Project is located on the Kennebec River in Somerset County, Maine.

The FEA was written by staff in the Office of Hydroelectric Licensing, Federal Energy Regulatory Commission. Copies of the FEA can be viewed at the Commission's Public Reference Room, Room 2A, 888 First Street, N.E., Washington, D.C. 20426. Copies can also be obtained by calling the project manager listed below. For further information, please contact the project manager, Jean A. Potvin, at (202) 219–0022.

Lois D. Cashell,

Secretary.

[FR Doc. 96–22766 Filed 9–5–96; 8:45 am]

BILLING CODE 6717–01–M

[Docket No. CP96–720–000, et al.]

Natural Gas Pipeline Company of America, et al.; Natural Gas Certificate Filings

August 29, 1996.

Take notice that the following filings have been made with the Commission:

1. Natural Gas Pipeline Company of America

[Docket No. CP96–720–000]

Take notice that on August 16, 1996, Natural Gas Pipeline Company of America (NGPL), 701 East 22nd Street, Lombard, Illinois 60148, filed an application: (1) For authorization, pursuant to section 7(b) of the Natural Gas Act, to abandon (by removal) a compressor unit located at NGPL's Station No. 139 in Lea County, New Mexico; and (2) for a certificate of public convenience and necessity, pursuant to section 7(c) of the Natural Gas Act, authorizing NGPL to construct (i.e., relocate and upgrade) and operate the aforementioned compressor unit as part of NGPL's Station No. 346 facility in Cameron Parish, Louisiana, all as more fully set forth in the application, which is on file with the Commission and open to public inspection.

NGPL states that the subject compressor is no longer needed at Station No. 139, and has not been utilized since January of 1993. NGPL proposes to abandon and remove the entire compressor unit (including the removal of all associated conduit, wiring, supports and piping), and have the compressor engine manufacturer upgrade it to the ''Best Available Control Technology'' (BACT) in order to reduce nitrous oxide (NOX) emissions. In addition to the BACT upgrade, NGPL proposes to increase the compressor unit to a 4,500 hp rating. NGPL proposes to relocate the upgraded compressor unit to its Station No. 346 facility on its Louisiana Line, in Cameron Parish, Louisiana, thereby increasing the Louisiana Line's capacity by 63 MMcfd. NGPL adds that it will perform certain non-jurisdictional activities as part of the Louisiana Line expansion project, including the re-wheeling of three existing compressors at its Station No. 346, and certain modifications to station piping at

NGPL's Station No. 342, in Cameron Parish, Louisiana.

NGPL states that its gas transmission system consists of two mainlines, its Amarillo Mainline, Gulf Coast Mainline, plus NGPL's A/G Line, which connects the two mainlines. NGPL adds that its Louisiana Line consists of 30-inch and 36-inch diameter pipelines which extend along the Gulf of Mexico from St. Mary Parish, Louisiana, to near Port Arthur, at the Texas/Louisiana border, and on to an interconnection with NGPL's Gulf Coast Mainline, in Montgomery County, Texas. NGPL states that the Louisiana Line section of its system serves east coast markets by delivering a total of 1,000 MMcfd of gas to other interstate pipeline companies, with approximately 414 MMcfd of this total being delivered to the eastern terminus of the Louisiana Line at the Henry Hub.

According to NGPL, MidCon Gas Service Corporation (MidCon), a marketing affiliate of NGPL, responded to an open season that NGPL held with respect to the possible expansion of capacity on its Louisiana Line, by signing a precedent agreement with NGPL for 50 MMcfd of the proposed 63 MMcfd capacity expansion for NGPL's Louisiana Line. NGPL states that the MidCon contract is for firm transportation service at a rate of $0.20, for seven years. NGPL also states that the revenues provided by the MidCon contract will cover the cost of the additional compression, and that NGPL will endeavor to market the remaining 13 MMcfd of uncommitted capacity.

NGPL further states that it will seek to roll-in the cost of the expansion facilities in its first rate case following the Commission's certification of the subject facilities. NGPL asserts that rolled-in rate treatment will reduce general system transportation rates, because the increased transportation revenues generated by the expansion facilities will exceed the incremental cost of such facilities.

Comment date: September 19, 1996, in accordance with Standard Paragraph F at the end of this notice.

2. Northern Natural Gas Company

[Docket No. CP96–731–000]

Take notice that on August 20, 1996, Northern Natural Gas Company (Northern), P.O. Box 3330, Omaha, Nebraska 68103–0330, filed in Docket No. CP96–731–000 a request pursuant to Sections 157.205 and 157.212 of the Commission's Regulations under the Natural Gas Act (18 CFR 157.205, 157.212) for authorization to install and operate new delivery point facilities located in Goodhue County, Minnesota, under Northern's blanket certificate issued in Docket No. CP82–401–000, pursuant to Section 7(c) of the Natural Gas Act, all as more fully set forth in the request that is on file with the Commission and open to public inspection.

Northern proposes to install and operate a new delivery point to accommodate natural gas deliveries to Northern States Power Company (NSP) under Northern's currently effective throughput service agreement(s) for redelivery to the community of Goodhue, Minnesota. It is indicated that NSP requests authorization to install a new delivery point due to the expansion of its distribution system into new areas. It is stated that this community does not currently have natural gas service. Northern states that the estimated volumes proposed to be delivered to NSP to the proposed delivery point are 500 MMBtu equivalent of natural gas on a peak day and 34,100 MMBtu equivalent on an annual basis. Northern states that it will own, operate, and maintain the delivery point. Northern estimates the total costs to install this delivery point to be $66,000.

Northern advises that the total volumes to be delivered to the customer after the request do not exceed the total volumes authorized prior to the request. Northern states that the proposed activity is not prohibited by its existing tariff and that it has sufficient capacity to accommodate the changes proposed herein without detriment or disadvantage to Northern's other customers.

Comment date: October 15, 1996, in accordance with Standard Paragraph G at the end of this notice.

3. Northwest Pipeline Corporation

[Docket No. CP96–736–000]

Take notice that on August 21, 1996, Northwest Pipeline Corporation (Northwest), 295 Chipeta Way, Salt Lake City, Utah 84158–0900, filed in Docket No. CP96–736–000 an application pursuant to Sections 7(b) and 7(c) of the Natural Gas Act for authorization to construct and operate replacement pipeline and measurement facilities and to abandon existing pipeline and measurement facilities in LaPlata County, Colorado, all as more fully set forth in the application on file with the Commission and open to public inspection.

Northwest proposes to relocate the facilities because they would be submerged by the Ridges Basin Dam and Reservoir which is being constructed 2 miles southwest of the town of Durango in LaPlata County. Specifically, Northwest proposes to construct and operate approximately 6 miles of 26-inch replacement pipeline and to install a new, relocated meter station in LaPlata County. Northwest proposes to abandon by removal 0.6 mile of 26-inch existing pipeline and to abandon in place 4.02 miles of existing 26-inch pipeline and the existing Durango delivery tap. Northwest estimates the cost of the abandonment and construction at $7.3 million, which would be reimbursed by the U.S. Bureau of Reclamation, which is building the dam and reservoir. It is stated that the proposed relocation is needed to assure the operational integrity of Northwest's mainline transmission system and to avoid significant reliability concerns associated with the inundation of the facilities by the dam and reservoir. It is asserted that the design capacity of Northwest's system would not be affected by the proposal.

Comment date: September 19, 1996, in accordance with Standard Paragraph F at the end of this notice.

4. Koch Gateway Pipeline Company

[Docket No. CP96–739–000]

Take notice that on August 22, 1996, Koch Gateway Pipeline Company (Koch Gateway), P.O. Box 1478, Houston, Texas 77521–1478, filed in Docket No. CP96–739–000, an application, pursuant to Section 7(c) of the Natural Gas Act, for a certificate of public convenience and necessity authorizing the construction and operation of compresson facilities, all as more fully set forth in the application which is on file with the Commission and open to public inspection.

Specifically, Koch Gateway requests authorization to construct and operate a 1,600 horsepower compression facility, to be known as the White Oak Compressor Station, in Gregg County, Texas. Koch Gateway states that the compression facilities are to be located on its existing 16-inch Latex-Fort Worth Main Line, designated as Index 1. Koch Gateway states that the gas requirements of its customers have changed, necessitating a directional change in the flow of natural gas, and that the proposed compression facilities will enhance its ability to move supplies through its system.

Comment date: September 19, 1996, in accordance with Standard Paragraph F at the end of this notice.

5. Florida Gas Transmission Company

[Docket No. CP96–742–000]

Take notice that on August 26, 1996, Florida Gas Transmission Company (FGT), 1400 Smith Street, Houston, Texas 77002, filed in Docket No. CP96–

742–000 an application pursuant to Section 7(b) of the Natural Gas Act for permission and approval to abandon a sale for resale service for Transcontinental Gas Pipe Line Corporation (Transco) which was authorized in Docket No. CP68–111,[1] all as more fully set forth in the application on file with the Commission and open to public inspection.

FGT proposes to abandon the sale for resale service it once provided Transco under an agreement dated August 28, 1967 which is designated as Rate Schedule X–2 in FGT's FERC Gas Tariff, Original Volume No. 3. FGT states that the August 28, 1967 agreement expired under its own terms on April 30, 1970. FGT further states that the proposed abandonment will not result in the abandonment of facilities nor will it result in the abandonment of service to any other customer of FGT.

Comment date: September 19, 1996, in accordance with Standard Paragraph F at the end of this notice.

Standard Paragraphs

F. Any person desiring to be heard or make any protest with reference to said filing should on or before the comment date file with the Federal Energy Regulatory Commission, 888 First Street, N.E., Washington, D.C. 20426, a motion to intervene or a protest in accordance with the requirements of the Commission's Rules of Practice and Procedure (18 CFR 385.211 and 385.214) and the Regulations under the Natural Gas Act (18 CFR 157.10). All protests filed with the Commission will be considered by it in determining the appropriate action to be taken but will not serve to make the protestants parties to the proceeding. Any person wishing to become a party to a proceeding or to participate as a party in any hearing therein must file a motion to intervene in accordance with the Commission's Rules.

Take further notice that, pursuant to the authority contained in and subject to jurisdiction conferred upon the Federal Energy Regulatory Commission by Sections 7 and 15 of the Natural Gas Act and the Commission's Rules of Practice and Procedure, a hearing will be held without further notice before the Commission or its designee on this filing if no motion to intervene is filed within the time required herein, if the Commission on its own review of the matter finds that a grant of the certificate is required by the public convenience and necessity. If a motion for leave to intervene is timely filed, or if the Commission on its own motion believes that a formal hearing is required, further notice of such hearing will be duly given.

Under the procedure herein provided for, unless otherwise advised, it will be unnecessary for the applicant to appear or be represented at the hearing.

G. Any person or the Commission's staff may, within 45 days after the issuance of the instant notice by the Commission, file pursuant to Rule 214 of the Commission's Procedural Rules (18 CFR 385.214) a motion to intervene or notice of intervention and pursuant to Section 157.205 of the Regulations under the Natural Gas Act (18 CFR 157.205) a protest to the request. If no protest is filed within the time allowed therefore, the proposed activity shall be deemed to be authorized effective the day after the time allowed for filing a protest. If a protest is filed and not withdrawn within 30 days after the time allowed for filing a protest, the instant request shall be treated as an application for authorization pursuant to Section 7 of the Natural Gas Act.

Lois D. Cashell,

Secretary.

[FR Doc. 96–22768 Filed 9–5–96; 8:45 am]

BILLING CODE 6717–01–P

[1] *See* 9 FERC ¶ 61,069 (1979).

ENVIRONMENTAL PROTECTION AGENCY

[ER–FRL–5472–8]

Environmental Impact Statements; Notice of Availability

Responsible Agency: Office of Federal Activities, General Information (202) 564–7167 OR (202) 564–7153. Weekly receipt of Environmental Impact Statements Filed August 26, 1996 Through August 30, 1996 Pursuant to 40 CFR 1506.9.

EIS No. 960403, Draft EIS, NPS, MA, Cape Cod National Seashore General Management Plan, Implementation, Barnstable County, MA, Due: October 31, 1996, Contact: Maria Burks (508) 349–3785.

This EIS was inadvertently omitted from the 8–30–96 Federal Register. The official 45 day NEPA review period is calculated from 8–30–96.

EIS No. 960404, Final EIS, FRC, WI, Flambeau River Hydroelectric Projects, Big Falls (FERC No. 2930), Thornapple (FERC No. 2475), Upper (FERC No. 2640), Lower (FERC No. 2421), Pixley (FERC No. 2395) and Crowley (FERC No. 2473), Relicensing WI, Due: October 7, 1996, Contact: Frank Karwoski (202) 219–2782.

EIS No. 960405, Final EIS, FRC, ME, NH, Saco River Basin Hydropower Development, (FERC Project Nos. 2528, 2527, 2194, 2531, 2529, 2530, and 11365), Licenses and Relicenses, ME and NH, Due: October 7, 1996, Contact: Rich McGuire (202) 219–3084.

EIS No. 960406, Draft EIS, FHW, WV, WV–9 Transportation Corridor Improvements, from Martinsburg to Charles Town, Berkeley, Jefferson and Morgan Counties, WV, Due: November 1, 1996, Contact: David Leighow (304) 347–5329.

EIS No. 960407, Final EIS, FRC, VT, MA, Deerfield River Hydroelectric Project (FERC No. 2323), Bear Swamp Pumped Storage Project (FERC No. 2669) and Gardners Falls Project (FERC, No. 2334), New License/Relicense Issuance, VT and MA, Due: October 7, 1996, Contact: R. Feller (202) 219–2796.

EIS No. 960408, Draft EIS, NOA, OH, Ohio Combined Coastal Management Program, Implementation, Special Management Areas (SMAs), Lake Erie, OH, Coastal Management Program, Implementation, Special Management Areas (SMAs), Lake Erie, OH, Due: November 15, 1996, Contact: Diana Olinger (301) 713–3113.

EIS No. 960409, Final EIS, AFS, OR, Upper Deschutes Wild and Scenic River and State Scenic Waterway, Management Plan, Implementation, Deschutes National Forest, Deschutes County, OR, Due: October 7, 1996, Contact: Mollie Chaudet (541) 383–4769.

EIS No. 960410, Final EIS, MMS, AL, CA, DE, LA, NJ, AK, CT, FL, MS, NY, NC, RI, VA, OR, TX, WA, Gulf of Mexico and Offshore Alaska Outer Continental Shelf (OCS) Oil and Gas Leasing Program 1997 to 2002 for 16 Lease Sales on Five-Year Leasing Program, Due: October 7, 1996, Contact: Richard Wilderman (703) 787–1674.

EIS No. 960411, Final EIS, NPS, NB, Niobrara National Scenic River, General Management Plan, Niobrara/Missouri National Scenic Riverways, Implementation, Brown, Cherry, Keya Paha and Rock Counties, NB, Due: October 7, 1996, Contact: Warren Hill (402) 336–3970.

EIS No. 960412, Draft Supplement, EPA, CA, International Wastewater Treatment Plant and South Bay Ocean Outfall, Updated Information, Interim Operation, Tijuana River, San Diego, CA, Due: October 21, 1996, Contact: Elizabeth Borowiec (415) 744–1165.

EIS No. 960413, Draft EIS, USN, CA, Las Pulgas and San Mateo Basin, Cease and Desist Order, Sewage Effluent Compliance Project, NPDES Permit, Marine Corps Base, Camp Pendleton,

San Diego County, CA, Due: October 21, 1996, Contact: David Walls (703) 696/2138.

EIS No. 960414, Final EIS, USN, United States Navy Shipboard Solid Waste Disposal, Implementation, MARPOL Special Areas: Designated Baltic Sea, North Sea, Wilder Caribbean, Antarctic Ocean, Mediterranean Sea, Black Sea and Red Sea, Gulfs Region: Persian Gulf and Gulf of Oman, Due: October 7, 1996, Contact: Robert K. Ostermueller (610) 595–0759.

Amended Notices

EIS No. 960318, Draft EIS, FHW, CA, CA–125 South Route Location, Adoption and Construction, between CA–905 on Otay Mesa to CA–54 in Spring Valley, Funding and COE Section 404 Permit, San Diego County, CA, Due: September 16, 1996, Contact: Jeffery S. Lewis (916) 498–5035. Published FR 7–12–96—Review Period extended.

Dated: September 3, 1996.

William D. Dickerson,

Director, NEPA Compliance Division, Office of Federal Activities.

[FR Doc. 96–22823 Filed 9–5–96; 8:45 am]

BILLING CODE 6560–50–M

[ER–FRL–5472–9]

Environmental Impact Statements and Regulations; Availability of EPA Comments

Availability of EPA comments prepared August 19, 1996 through August 23, 1996 pursuant to the Environmental Review Process (ERP), under Section 309 of the Clean Air Act and Section 102(2)(c) of the National Environmental Policy Act as amended. Requests for copies of EPA comments can be directed to the Office of Federal Activities at (202) 564–7167.

An explanation of the ratings assigned to draft environmental impact statements (EISs) was published in FR dated April 05, 1996 (61 FR 15251).

Drafts EISs

ERP No. D–AFS–G61036–NM Rating LO, EL Cajete Pumice Mine Project, Implementation, Plan of Operation and COE Section 404 Permit, Jemez National Recreation Area, Santa Fe National Forest, Jemez Ranger District, Sandoval County, NM.

Summary: EPA expressed lack of objections to the selection of the Forest Service's preferred Alternative 1(a) as described in the draft EIS.

ERP No. D–AFS–J65250–CO Rating EC1, Routt National Forest Land and Resource Management Plan, Implementation, Grand, Routt, Rio Blanco, Jackson, Moffat and Garfield Counties, CO.

Summary: EPA expressed environmental concerns about water quality, fisheries and wildlife habitat and noxious weed control. EPA suggests that the FEIS add details or general plans to improve or maintain environmental conditions and include revised requirements for grazing allotment analysis.

ERP No. D–AFS–J65253–MT Rating EC2, Boulder and Wyman Gulch Vegetation Management Timber Sale and Prescribed Burning, Implementation, Beaverhead-Deerlodge National Forests, Philipsburg Ranger District, Granite County, MT.

Summary: EPA expressed environmental concerns regarding exiting degraded water quality and fisheries in the project area and choice of treatment method/units in alternatives. EPA recommends additional information be included in the final EIS to fully assess and mitigate for potential adverse impacts to fisheries cumulative watershed impact, timber supply and wildlife habitat.

ERP No. D–AFS–J65254–MT Rating EC2, Sheep Range and China Basin Salvage Project, Implementation, Kootenai National Forest, Libby Ranger District, Lincoln County, MT.

Summary: EPA expressed environmental concerns about inadequate disclosure of environmental impacts and cumulative impacts to the threatened grizzly bear. EPA suggests that the final EIS include information to fully assess and mitigate all potential environmental impacts of the management actions.

ERP No. DS–AFS–J65153–MT Rating LO, Trail Creek Timber Sale, Implementation, New and Updated Information, Beaverhead National Forest, Wisdom Ranger District, Beaverhead County, MT.

Summary: EPA expressed lack of objections to the proposed action.

Final EISs

ERP No. F–AFS–E65047–MS, G. F. Erambert and Black Creek Seed Orchards Pest Management Plan, Implementation, Southern Region, National Forests in Mississippi, Forrest and Perry Counties, MS.

Summary: EPA expressed no objections; our comments in the draft EIS were adequately addressed in the final EIS.

ERP No. F–BLM–J02009–00, Express Crude Oil Pipeline Project, Construction, Operation and Maintenance, Issuance of Right-of-Way Grant, Hill, Chouteau, Fergus, Judith Basin, Wheatland, Golden Valley, Stillwater and Carbon Counties, MT and Bighorn, Washakies, Hot Springs, Freemont and Watrona Counties, WY.

Summary: EPA expressed environmental concerns regarding the proposed pipeline crossings of rivers, streams and wetlands, and requests that directional drilling be used for the pipeline crossing of the Yellowstone River, as well as be considered for other major river crossings with significant fisheries, wide channels, and late season flows. EPA recommended that a wetland mitigation plan be prepared and will continue to work closely with the Corps of Engineers on 404 permitting issues related to this project.

ERP No. F–BLM–J65229–MT, Sweet Grass Hills Resource Management Plan Amendment, Implementation, West HiLine Resource Management Plan, Toole and Liberty Counties, MT.

Summary: EPA continues to express environmental concerns regarding potential adverse impacts to cultural and water resource associated with reasonably foreseeable mining actions.

ERP No. F–BLM–J67019–MT, Zortman and Landusky Mines Reclamation Plan Modifications and Mine Life Extensions, Approval of Mine Operation, Mine Reclamation and COE Section 404 Permits, Little Rocky Mountains, Phillip County, MT.

Summary: EPA continues to express environmental objections regarding water quality and environmental justice. The FEIS responded to a number of the DEIS water quality objections in the expanded Water Quality Improvement Plan. Many of the remaining water quality objections would be addressed if the proposed operating permit incorporates requirements necessary to comply with the Clean Water Act. The proposed action potentially poses a significantly high adverse impact to cultural resources and religious practices of the tribal community. EPA recommends considering alternative dispute resolution to investigate additional opportunities for mitigating impacts to the Tribes.

ERP No. FS–BLM–J65203–MT, Big Dry Land and Resource Management Plan, Updated Information on Leaving the Calypso Trail Open or Closing the Trail to Motorized Vehicles, Implementation, Miles City District, MT.

Summary: EPA expressed environmental concerns about potential adverse impacts, i.e. erosion, to the trail from unlimited motorized access. EPA suggests analyzing additional options and alternatives that may better balance the multiple uses expected by the public. EPA suggests that the standards and criteria used by BLM to evaluate

and quantify trail erosion and impacts to Wilderness Study Areas be clearly outlined and be made publically available.

Dated: September 3, 1996.

William D. Dickerson,

Director, NEPA Compliance Division, Office of Federal Activities.

[FR Doc. 96–22824 Filed 9–5–96; 8:45 am]

BILLING CODE 6560–50–U

[OPP–00449; FRL–5394–8]

FIFRA Scientific Advisory Panel, Open Meeting; Extension of Comment Period on Proposed Test Guidelines

AGENCY: Environmental Protection Agency (EPA).

ACTION: Notice of open meeting and extension of comment period.

SUMMARY: There will be a 2-day meeting of the Federal Insecticide, Fungicide, and Rodenticide Act (FIFRA) Scientific Advisory Panel (SAP) to review a set of scientific issues being considered by the Agency in connection with the Agency Test Guidelines, Series 870, Health Effects for OPPTS. These Test Guidelines have been updated and harmonized, to the extent possible, with the OECD Guidelines for Testing of Chemicals, and other relevant international standards. Two specific risk assessment methodology issues will be addressed. The first concerns applying an extra 10-fold safety factor when using developmental effects and the second, in-utero exposure for carcinogenicity studies. The SAP also will review carcinogenicity assessments for the chemicals alachlor and vinclozolin as well as the developmental effects assessment for vinclozolin. EPA is also extending the comment period for a notice published in the Federal Register of June 20, 1996, announcing the availability of proposed testing guidelines for Series 870--Health Effects Test Guidelines.

DATES: The meeting will be held on Tuesday and Wednesday, October 29 and 30, 1996, from 8:30 a.m. to 5 p.m.

Comments on the proposed guidelines for Series 870 will be accepted until September 19, 1996.

ADDRESSES: The meeting will be held at: Holiday Inn at Ballston, 4610 North Fairfax Drive, Arlington, VA 22203 (I-66 and Glebe Road), Telephone: (703) 243–9900. Submit written comments (one original and 20 copies) to: By mail: Public Response and Program Resources Branch, Field Operations Division (7506C), Environmental Protection Agency, 401 M St., SW., Washington, DC 20460. In person, bring comments to: Rm. 1132, Crystal Mall #2, 1921 Jefferson Davis Highway, Arlington, VA.

Comments and data may also be submitted electronically by sending electronic mail (e-mail) to: opp-docket@epamail.epa.gov. Electronic comments must be submitted as an ASCII file avoiding the use of special characters and any form of encryption. Comments and data will also be accepted on disks in WordPerfect 5.1 file format or ASCII file format. All comments and data in electronic form must be identified by the docket number ''OPP–00449.'' No Confidential Business Information (CBI) should be submitted through e-mail. Electronic comments on this document may be filed online at many Federal Depository Libraries. Additional information on electronic submissions can be found under SUPPLEMENTARY INFORMATION.

FOR FURTHER INFORMATION CONTACT: By mail: Larry C. Dorsey, Designated Federal Official, FIFRA Scientific Advisory Panel (7501C), Office of Pesticide Programs, Environmental Protection Agency, 401 M St., SW., Washington, DC 20460, Office location: Rm. 815B, CM #2, 1921 Jefferson Davis Highway, Arlington, VA 22203, Telephone: (703) 305–5369/7351, e-mail: dorsey.larry@epamail.epa.gov.

Copies of EPA documents may be obtained by contacting: By mail: Public Response and Program Resources Branch, Field Operations Division (7506C), Office of Pesticide Programs, Environmental Protection Agency, 401 M St., SW., Washington, DC 20460, Office location: Rm. 1132 Bay, CM #2, 1921 Jefferson Davis Highway, Arlington, VA 22203, Telephone: (703) 305–5805.

SUPPLEMENTARY INFORMATION: On June 20, 1996 (61 FR 31522) (FRL–5367–7), the Agency issued a Notice of Availability and request for comments for the proposed Health Effects Testing Guidelines that are the subject of this meeting. In that Notice, the deadline for comments was cited as August 19, 1996. The Agency will continue to accept comments on these proposed guidelines until September 19, 1996. All comments received as per the June 20th Notice in addition to comments received as per this Notice will be used as background material for the upcoming SAP meeting.

Any member of the public wishing to submit written comments should contact Larry C. Dorsey at the address or the telephone number given above to be sure that the meeting is still scheduled and to confirm the Panel's agenda. Interested persons are permitted to file written statements before the meeting. To the extent that time permits and upon advanced written request to the Designated Federal Official, interested persons may be permitted by the chairman of the Scientific Advisory Panel to present oral statements at the meeting. There is no limit on written comments for consideration by the Panel, but oral statements before the Panel are limited to approximately 5 minutes. As oral statements will be permitted only as time permits, the Agency urges the public to submit written comments in lieu of oral presentations. Persons wishing to make oral and/or written statements should notify the Designated Federal Official and submit 20 copies of a summary no later than October 1, 1996, to ensure appropriate consideration by the Panel.

Information submitted as a comment in response to this notice may be claimed confidential by marking any part or all of that information as CBI. Information so marked will not be disclosed except in accordance with procedures set forth in 40 CFR part 2. A copy of the comment that does not contain CBI must be submitted for inclusion in the public docket. Information not marked confidential will be included in the public docket without prior notice. All statements will be made part of the record and will be taken into consideration by the Panel.

A public record has been established for this notice under docket number ''OPP–00449'' (including comments and data submitted electronically as described below). A public version of this record, including printed, paper versions of electronic comments, which does not include any information claimed as CBI, is available for inspection from 8 a.m. to 4 p.m., Monday through Friday, excluding legal holidays. The public record is located in Rm. 1132 Bay of the Public Response and Program Resources Branch, Field Operations Division (7506C), Office of Pesticide Programs, Environmental Protection Agency, Crystal Mall #2, 1921 Jefferson Davis Highway, Arlington, VA.

Electronic comments can be sent directly to EPA at:

opp-docket@epamail.epa.gov.

Electronic comments must be submitted as an ASCII file avoiding the use of special characters and any form of encryption.

The official record for this notice, as well as the public version, as described above will be kept in paper form. Accordingly, EPA will transfer all comments received electronically into printed, paper form as they are received and will place the paper copies in the official record which will also include

all comments submitted directly in writing. The official record is the paper record maintained at the address in ''ADDRESSES'' at the beginning of this document.

Copies of the Panel's report of their recommendations will be available 10 to 15 working days after the meeting and may be obtained by contacting the Public Response and Program Resources Branch, at the address or telephone number given above.

Dated: August 28, 1996.

Daniel Barolo,

Director, Office of Pesticide Programs.

[FR Doc. 96–22780 Filed 9–5–96; 8:45 am]

BILLING CODE 6560–50–F

FEDERAL DEPOSIT INSURANCE CORPORATION

Sunshine Act Meeting

Pursuant to the provisions of the ''Government in the Sunshine Act'' (5 U.S.C. 552b), notice is hereby given that the Federal Deposit Insurance Corporation's Board of Directors will meet in open session at 10:00 a.m. on Tuesday 10, 1996, to consider the following matters:

Summary Agenda: No substantive discussion of the following items is anticipated. These matters will be resolved with a single vote unless a member of the Board of Directors requests that an item be moved to the discussion agenda.

Disposition of minutes of previous meetings.

Reports of actions approved by officers of the Corporation pursuant to authority delegated by the Board of Directors.

Memorandum and resolution re: Rescission of Part 3202 of the FDIC's rules and regulations entitled Supplemental Financial Disclosure Requirements for Employees.

Memorandum and resolution re: Rescission of a Statement of Policy on the Interest Rate Futures Contracts, Forward Contracts, and Standby Contracts.

Memorandum and resolution re: Revision of the Statement of Policy concerning Applicability on Foreclosure Consent and Redemption Rights and Update to Notice of Financial Institutions for Which the FDIC has been Appointed either Receiver, Liquidator, or Manager.

Discussion Agenda

Memorandum and resolution re: Proposed Amendments to Part 338—Fair Housing.

The meeting will be held in the Board Room on the sixth floor of the FDIC Building located at 550—17th Street, N.W., Washington, DC.

The FDIC will provide attendees with auxiliary aids (e.g., sign language interpretation) required for this meeting. Those attendees needing such assistance should call (202) 416–2449 (Voice); (202) 416–2004 (TTY), to make necessary arrangements.

Requests for further information concerning the meeting may be directed to Mr. Jerry L. Langley, Executive Secretary of the Corporation, at (202) 898–6757.

Dated: September 3, 1996.

Federal Deposit Insurance Corporation

Jerry L. Langley,

Executive Secretary.

[FR Doc. 96–22927 Filed 9–4–96; 12:17 pm]

BILLING CODE 6714–01–M

Sunshine Act Meeting

Pursuant to the provisions of the ''Government in the Sunshine Act'' (5 U.S.C. 552b), notice is hereby given that at 10:03 a.m. on Tuesday, August 27, 1996, the Board of Directors of the Federal Deposit Insurance Corporation met in closed session to consider matters relating to the Corporation's supervisory activities.

In calling the meeting, the Board determined, on motion of Vice Chairman Andrew C. Hove, Jr., seconded by Director Joseph H. Neely (Appointive), concurred in by Ms. Julie Williams, acting in the place and stead of Director Eugene A. Ludwig (Comptroller of the Currency), Mr. John Downey, acting in the place and stead of Director Jonathan L. Fiechter (Acting Director, Office of Thrift Supervision), and Chairman Ricki Helfer, that Corporation business required its consideration of the matters on less than seven days' notice to the public; that no earlier notice of the meeting was practicable; that the public interest did not require consideration of the matters in a meeting open to public observation; and that the matters could be considered in a closed meeting by authority of subsections (c)(4), (c)(6), (c)(8), (c)(9)(A)(ii) and (c)(9)(B) of the ''Government in the Sunshine Act'' (5 U.S.C. 552b (c)(4), (c)(6), (c)(8), (c)(9)(A)(ii) and (c)(9)(B)).

The meeting was held in the Board Room of the FDIC Building located at 550—17th Street, N.W., Washington, D.C.

Dated: August 27, 1996.

Federal Deposit Insurance Corporation

Valerie J. Best,

Assistant Executive Secretary.

[FR Doc. 96–22928 Filed 9–4–96; 12:17 pm]

BILLING CODE 6714–01–M

FEDERAL RESERVE SYSTEM

Change in Bank Control Notices; Acquisitions of Shares of Banks or Bank Holding Companies

The notificants listed below have applied under the Change in Bank Control Act (12 U.S.C. 1817(j)) and § 225.41 of the Board's Regulation Y (12 CFR 225.41) to acquire a bank or bank holding company. The factors that are considered in acting on the notices are set forth in paragraph 7 of the Act (12 U.S.C. 1817(j)(7)).

The notices are available for immediate inspection at the Federal Reserve Bank indicated. Once the notices have been accepted for processing, they will also be available for inspection at the offices of the Board of Governors. Interested persons may express their views in writing to the Reserve Bank indicated for that notice or to the offices of the Board of Governors. Comments must be received not later than September 19, 1996.

A. Federal Reserve Bank of St. Louis (Randall C. Sumner, Vice President) 411 Locust Street, St. Louis, Missouri 63166:

1. Jackson T. Stephens, Little Rock, Arkansas; to acquire a total of 3.84 percent; W.R. Stephens Trust, Little Rock, Arkansas, to acquire an additional 3.59 percent, for a total of 3.63 percent; W.R. Stephens Revocable Trust, Little Rock, Arkansas, to acquire a total of 0.03 percent; Warren A. Stephens Trust, Little Rock, Arkansas, to acquire a total of 0.28 percent; Elizabeth Ann Stephens Campbell Trust, Little Rock, Arkansas, to acquire a total of 0.80 percent; Stephens Group, Inc., Little Rock, Arkansas, to acquire a total of 0.10 percent; and Bess C. Stephens Trust, Little Rock, Arkansas, to acquire an additional 2.72 percent, for a total of 6.75 percent, of the voting shares of First United Bancshares, Inc., El Dorado, Arkansas, and thereby indirectly acquire First National Bank of El Dorado, El Dorado, Arkansas; Bank of North Arkansas, Melbourne, Arkansas; City National Bank of Fort Smith, Fort Smith, Arkansas; Commercial Bank at Alma, Alma, Arkansas; First National Bank of Magnolia, Magnolia, Arkansas; First Stuttgart Bank & Trust Company,

Stuttgart, Arkansas; Merchants & Planters Bank, N.A., Camden, Arkansas, and FirstBank, Texarkana, Texas.

B. Federal Reserve Bank of Dallas (Genie D. Short, Vice President) 2200 North Pearl Street, Dallas, Texas 75201-2272:

1. Ned S. Holmes, Houston, Texas; to acquire an additional 3.24 percent, for a total of 17.65 percent, of the voting shares of Commercial Bancshares, Inc., Houston, Texas, and thereby indirectly acquire Heritage Bank, Wharton, Texas.

2. Rayford Holley Reily, Groveton, Texas; to acquire an additional 5 percent, for a total of 28.82 percent, of the voting shares of Citizens State Financial Corporation, Corrigan, Texas, and thereby indirectly acquire Citizens State Bank, Corrigan, Texas, and First Bank, Groveton, Texas.

Board of Governors of the Federal Reserve System, August 30, 1996.

William W. Wiles

Secretary of the Board.

[FR Doc. 96–22743 Filed 9–5–96; 8:45 am]

BILLING CODE 6210–01–F

De Novo Corporation to do Business Under Section 25A of the Federal Reserve Act

An application has been submitted for the Board's approval of the organization of a corporation to do business under Section 25A of the Federal Reserve Act (Edge Corporation) 12 U.S.C. § 611 *et seq*. The Edge Corporation will operate as a subsidiary of the applicant, Bank One, Texas, National Association, Dallas, Texas. The factors that are to be considered in acting on the application are set forth in the Board's Regulation K (12 CFR 211.4).

The application may be inspected at the Federal Reserve Bank of Cleveland or at the Board of Governors. Any comment on an application that requests a hearing must include a statement of why a written presentation would not suffice in lieu of a hearing, identify specifically any questions of fact that are in dispute, and summarize the evidence that would be presented at a hearing.

Comments regarding the application must be received by the Reserve Bank indicated or at the offices of the Board of Governors no later than September 20, 1996.

A. Federal Reserve Bank of Cleveland (Andrew C. Burkle, Jr., Vice President) 1455 East 6th, Cleveland, Ohio 44114:

1. Bank One, Texas, National Association, Dallas, Texas; to establish Banc One International Corporation, Dallas, Texas, a *de novo* Edge Corporation pursuant to Section 25A of the Federal Reserve Act.

Board of Governors of the Federal Reserve System, August 30, 1996.

William W. Wiles

Secretary of the Board

[FR Doc. 96–22740 Filed 9–5–96; 8:45 am]

BILLING CODE 6210–01–F

Formations of, Acquisitions by, and Mergers of Bank Holding Companies

The companies listed in this notice have applied to the Board for approval, pursuant to the Bank Holding Company Act of 1956 (12 U.S.C. 1841 *et seq*.) (BHC Act), Regulation Y (12 CFR Part 225), and all other applicable statutes and regulations to become a bank holding company and/or to acquire the assets or the ownership of, control of, or the power to vote shares of a bank or bank holding company and all of the banks and nonbanking companies owned by the bank holding company, including the companies listed below.

The applications listed below, as well as other related filings required by the Board, are available for immediate inspection at the Federal Reserve Bank indicated. Once the application has been accepted for processing, it will also be available for inspection at the offices of the Board of Governors. Interested persons may express their views in writing on the standards enumerated in the BHC Act (12 U.S.C. 1842(c)). If the proposal also involves the acquisition of a nonbanking company, the review also includes whether the acquisition of the nonbanking company complies with the standards in section 4 of the BHC Act, including whether the acquisition of the nonbanking company can ''reasonably be expected to produce benefits to the public, such as greater convenience, increased competition, or gains in efficiency, that outweigh possible adverse effects, such as undue concentration of resources, decreased or unfair competition, conflicts of interests, or unsound banking practices'' (12 U.S.C. 1843). Any request for a hearing must be accompanied by a statement of the reasons a written presentation would not suffice in lieu of a hearing, identifying specifically any questions of fact that are in dispute, summarizing the evidence that would be presented at a hearing, and indicating how the party commenting would be aggrieved by approval of the proposal. Unless otherwise noted, nonbanking activities will be conducted throughout the United States.

Unless otherwise noted, comments regarding each of these applications must be received at the Reserve Bank indicated or the offices of the Board of Governors not later than September 30, 1996.

A. Federal Reserve Bank of St. Louis (Randall C. Sumner, Vice President) 411 Locust Street, St. Louis, Missouri 63166:

1. Union Planters Corporation, Memphis, Tennessee, and Capital Bancoporation, Inc., Memphis, Tennessee; to acquire 100 percent of the voting shares of, and merge with Financial Bancshares, Inc., St. Louis, Missouri; and thereby indirectly acquire First Financial Bank of St. Louis, St. Louis, Missouri; First Financial Bank of Mississippi County, East Prairie, Missouri; First Financial Bank of Ste. Genevieve, Ste. Genevieve, Missouri; First Financial Bank of Southeast Missouri, Sikeston, Missouri; Citizens First Financial Bank, Dexter, Missouri.

B. Federal Reserve Bank of Kansas City (John E. Yorke, Senior Vice President) 925 Grand Avenue, Kansas City, Missouri 64198:

1. Premier Bancorp, Inc., Denver, Colorado; to become a bank holding company by acquiring 100 percent of the voting shares of Premier Bank, Denver, Colorado.

Board of Governors of the Federal Reserve System, August 30, 1996.

William W. Wiles

Secretary of the Board

[FR Doc. 96–22741 Filed 9–5–96; 8:45 am]

BILLING CODE 6210–01–F

Notice of Proposals to Engage in Permissible Nonbanking Activities or to Acquire Companies that are Engaged in Permissible Nonbanking Activities

The companies listed in this notice have given notice under section 4 of the Bank Holding Company Act (12 U.S.C. 1843) (BHC Act) and Regulation Y, (12 CFR Part 225) to engage *de novo*, or to acquire or control voting securities or assets of a company that engages either directly or through a subsidiary or other company, in a nonbanking activity that is listed in § 225.25 of Regulation Y (12 CFR 225.25) or that the Board has determined by Order to be closely related to banking and permissible for bank holding companies. Unless otherwise noted, these activities will be conducted throughout the United States.

Each notice is available for inspection at the Federal Reserve Bank indicated. Once the notice has been accepted for processing, it will also be available for inspection at the offices of the Board of Governors. Interested persons may express their views in writing on the question whether the proposal complies with the standards of section 4 of the

BHC Act, including whether consummation of the proposal can ''reasonably be expected to produce benefits to the public, such as greater convenience, increased competition, or gains in efficiency, that outweigh possible adverse effects, such as undue concentration of resources, decreased or unfair competition, conflicts of interests, or unsound banking practices'' (12 U.S.C. 1843). Any request for a hearing on this question must be accompanied by a statement of the reasons a written presentation would not suffice in lieu of a hearing, identifying specifically any questions of fact that are in dispute, summarizing the evidence that would be presented at a hearing, and indicating how the party commenting would be aggrieved by approval of the proposal.

Unless otherwise noted, comments regarding the applications must be received at the Reserve Bank indicated or the offices of the Board of Governors not later than September 19, 1996.

A. Federal Reserve Bank of Boston (Robert M. Brady, Vice President) 600 Atlantic Avenue, Boston, Massachusetts 02106:

1. State Street Boston Corporation, Boston, Massachusetts; to engage *de novo* through its subsidiaries, Boston Financial Data Services, Inc., Quincy, Massachusetts, and National Financial Data Services, Inc., Kansas City, Missouri, in securities brokerage activities, pursuant to § 225.25(b)(15)(i) of the Board's Regulation Y.

B. Federal Reserve Bank of New York (Christopher J. McCurdy, Senior Vice President) 33 Liberty Street, New York, New York 10045:

1. Summit Bancorp, Princeton, New Jersey; to acquire Central Jersey Financial Corp., East Brunswick, New Jersey, and thereby indirectly acquire Central Jersey Savings Bank, SLA, East Brunswick, New Jersey, and thereby engage in operating a savings association, pursuant to § 225.25(b)(9) of the Board's Regulation Y.

C. Federal Reserve Bank of Philadelphia (Michael E. Collins, Senior Vice President) 100 North 6th Street, Philadelphia, Pennsylvania 19105:

1. CoreStates Financial Corp., Philadelphia, Pennsylvania; to engage *de novo* through its subsidiary, CoreStates Securities Corp, Philadelphia, Pennsylvania, in underwriting and dealing in government obligations, pursuant to § 225.25(b)(16) of the Board's Regulation Y.

2. Fulton Financial Corporation, Lancaster, Pennsylvania; to engage *de novo* in community development activities through a limited partnership, pursuant to § 225.25(b)(6) of the Board's Regulation Y.

D. Federal Reserve Bank of Chicago (James A. Bluemle, Vice President) 230 South LaSalle Street, Chicago, Illinois 60690:

1. Caisse Nationale de Credit Agricole S.A., Paris, France; to retain through Banque Indosuez, Paris, France, Indosuez Carr Futures, Inc., Chicago, Illinois, Daniel Breen & Company, L.P., Houston, Texas, and thereby engage in acting as a futures commission merchant and providing related advisory services, and in investment advisory activities. In connection with this application, Caisse Nationale de Credit Agricole S.A., Paris, France, and Banque Indosuez, Paris, France, also have applied to engage through Daniel Breen & Company, L.P., Houston, Texas, and Breen Trust Company, Houston, Texas, in functions and activities permitted for trust companies. In addition, Applicants also have applied to engage *de novo* in acting as a futures commission merchant and providing related advisory services with respect to non-financial futures and, to provide execution-only and clearance-only services with respect to futures transactions. Applicant proposed to engage in these activities, pursuant to § 225.25 b)(18), and (b)(3) of the Board's Regulation Y and Board Order. 79 Fed. Res. Bull. 1049 (1993); 80 Fed. Res. Bull. 151 (1994); 80 Fed. Res. Bull. 649 (1994); and 80 Fed. Res. Bull. 552 (1994).

2. Stichting Prioriteit ABN AMRO Holding, Amsterdam, The Nertherlands; Stichting Administratiekantoor ABN AMRO Holding, Amsterdam, The Netherlands; ABN AMRO Holding N.V., Amsterdam, The Netherlands; ABN AMRO Bank N.V., Amsterdam, The Netherlands; ABN AMRO North America, Inc., Chicago, Illinois, to acquire Heigle Mortgage and Financial Corporation, Bloomington, Minnesota, and thereby indirectly acquire LaSalle Home Mortgage Corporation, Chicago, Illinois, and thereby engage in the nonbanking activity of making and servicing loans, pursuant to § 225.25(b)(1) of the Board's Regulation Y.

E. Federal Reserve Bank of St. Louis (Randall C. Sumner, Vice President) 411 Locust Street, St. Louis, Missouri 63166:

1. National Commerce Bancorporation, Memphis, Tennessee; to acquire Kenesaw Leasing Inc., Knoxville, Tennessee, and thereby engage in leasing personal or real property, pursuant to § 225.25(b)(5) of the Board's Regulation Y.

Board of Governors of the Federal Reserve System, August 30, 1996.

William W. Wiles

Secretary of the Board

[FR Doc. 96–22742 Filed 9–5–96; 8:45 am]

BILLING CODE 6210–01–F

Federal Open Market Committee; Domestic Policy Directive of July 2-3, 1996.

In accordance with § 271.5 of its rules regarding availability of information (12 CFR part 271), there is set forth below the domestic policy directive issued by the Federal Open Market Committee at its meeting held on July 2-3, 1996.[1] The directive was issued to the Federal Reserve Bank of New York as follows:

The information reviewed at this meeting suggests that economic activity advanced considerably further in the second quarter, but increases in final demand showed some signs of moderation. Nonfarm payroll employment was up substantially in April and May; the civilian unemployment rate rose to 5.6 percent in May. Industrial production increased appreciably further in May, reflecting gains across a wide range of industries. Real consumer spending rose substantially on balance over April and May. Single-family housing starts fell considerably in May from a relatively high level in April. Orders and contracts point to some deceleration in spending on business equipment and nonresidential structures after a very rapid expansion earlier in the year. The nominal deficit on U.S. trade in goods and services widened in April from its rate in the first quarter. Upward pressures on food and energy prices have led to somewhat larger increases in the consumer price index over recent months.

Most Market interest rates have edged higher since the Committee meeting on May 21. In foreign exchange markets, the trade-weighted value of the dollar in terms of the other G-10 currencies has depreciated slightly over the intermeeting period.

M2 declined in May, though partial data for June pointed to a rebound. Growth of M3 was relatively sluggish in May but also appears to have turned up in June. For the year through June, both aggregates are estimated to have grown at rates around the upper bounds of

[1] Copies of the Minutes of the Federal Open Market Committee meeting of July 2-3, 1996, which include the domestic policy directive issued at that meeting, are available upon request to the Board of Governors of the Federal Reserve System, Washington, D.C. 20551. The minutes are published in the Federal Reserve Bulletin and in the Board's annual report.

their respective ranges for the year. Expansion in total domestic nonfinancial debt has been moderate on balance over recent months and has remained in the middle portion of its range.

The Federal Open Market Committee seeks monetary and financial conditions that will foster price stability and promote sustainable growth in output. In furtherance of these objectives, the Committee reaffirmed at this meeting the ranges it had established in January for growth of M2 and M3 of 1 to 5 percent and 2 to 6 percent respectively, measured from the fourth quarter of 1995 to the fourth quarter of 1996. The monitoring range for growth of total domestic nonfinancial debt was maintained at 3 to 7 percent for the year. For 1997 the Committee agreed on tentative ranges for monetary growth, measured from the fourth quarter of 1996 to the fourth quarter of 1997, of 1 to 5 percent for M2 and 2 to 6 percent for M3. The Committee provisionally set the associated monitoring range for growth of total domestic nonfinancial debt at 3 to 7 percent for 1997. The behavior of the monetary aggregates will continue to be evaluated in the light of progress toward price level stability, movements in their velocities, and developments in the economy and financial markets.

In the implementation of policy for the immediate future, the Committee seeks to maintain the existing degree of pressure on reserve positions. In the context of the Committee's long-run objectives for price stability and sustainable economic growth, and giving careful consideration to economic, financial, and monetary developments, somewhat greater reserve restraint would or slightly lesser reserve restraint might be acceptable in the intermeeting period. The contemplated reserve conditions are expected to be consistent with moderate growth in M2 and M3 over coming months.

By order of the Federal Open Market Committee, August 28, 1996.

Donald L. Kohn,

Secretary, Federal Open Market Committee.

[FR Doc. 96–22805 Filed 9–5–96; 8:45 am]

BILLING CODE 6210–01–F

Sunshine Act Meeting

AGENCY HOLDING THE MEETING: Committee on Employee Benefits of the Federal Reserve System*

TIME AND DATE: 9:00 a.m., Wednesday, September 11, 1996.

PLACE: Marriner S. Eccles Federal Reserve Board Building, C Street entrance between 20th and 21st Streets, N.W., Washington, D.C. 20551.

STATUS: Closed.

MATTERS TO BE CONSIDERED:

1. Proposals relating to Federal Reserve System benefits.

2. Any items carried forward from a previously announced meeting.

* * * * * *

* The Committee on Employee Benefits considers matters relating to the Retirement, Thrift, Long-Term Disability Income, and Insurance Plans for Employees of the Federal Reserve System.

CONTACT PERSON FOR MORE INFORMATION: Mr. Joseph R. Coyne, Assistant to the Board; (202) 452–3204.

Dated: September 4, 1996

William W. Wiles,

Secretary of the Board.

[FR Doc. 96–22900 Filed 9–4–96; 10:20 am]

BILLING CODE 6210–01–P

Sunshine Act Meeting.

AGENCY HOLDING THE MEETING: Board of Governors of the Federal Reserve System.

TIME AND DATE: 10:00 a.m., Wednesday, September 11, 1996.

PLACE: Marriner S. Eccles Federal Reserve Board Building, C Street entrance between 20th and 2lst Streets, N.W., Washington, D.C. 20551.

STATUS: Open

MATTERS TO BE CONSIDERED:

Summary Agenda: Because of its routine nature, no discussion of the following item is anticipated. This matter will be voted on without discussion unless a member of the Board requests that the item be moved to the discussion agenda.

1. Proposed amendments to Regulation Z (Truth in Lending) concerning lenders' liability for disclosure errors in real estate-secured loans and new disclosure rules for debt cancellation contracts (proposed earlier for public comment; Docket No. R–0927).

2. Any items carried forward from a previously announced meeting.

Discussion Agenda: PLEASE NOTE THAT NO DISCUSSION ITEMS ARE SCHEDULED FOR THIS MEETING.

Note: If the items are moved from the Summary Agenda to the Discussion Agenda, discussion of the items will be recorded. Cassettes will then be available for listening in the Board's Freedom of Information Office, and copies can be ordered for $5 per cassette by calling (202) 452–3684 or by writing to: Freedom of Information Office, Board of Governors of the Federal Reserve System, Washington, D.C. 20551.

CONTACT PERSON FOR MORE INFORMATION: Mr. Joseph R. Coyne, Assistant to the Board; (202) 452–3204.

Dated: September 4, 1996.

William W. Wiles,

Secretary of the Board.

[FR Doc. 96–22901 Filed 9–4–96; 10:20 am]

BILLING CODE 6210–01–P

Sunshine Act Meeting

AGENCY HOLDING THE MEETING: Board of Governors of the Federal Reserve System.

TIME AND DATE: Approximately 10:15 a.m., Wednesday, September 11, 1996, following a recess at the conclusion of the open meeting.

PLACE: Marriner S. Eccles Federal Reserve Board Building, C Street entrance between 20th and 21st Streets, NW., Washington, DC 20551.

STATUS: Closed.

MATTERS TO BE CONSIDERED:

1. Personnel actions (appointments, promotions, assignments, reassignments, and salary actions) involving individual Federal Reserve System employees.

2. Any items carried forward from a previously announced meeting.

CONTACT PERSON FOR MORE INFORMATION: Mr. Joseph R. Coyne, Assistant to the Board; (202) 452–3204. You may call (202) 452–3207, beginning at approximately 5 p.m. two business days before this meeting, for a recorded announcement of bank and bank holding company applications scheduled for the meeting.

Dated: September 4, 1996.

William W. Wiles,

Secretary of the Board.

[FR Doc. 96–22902 Filed 9–4–96; 10:20 am]

BILLING CODE 6210–01–P

FEDERAL RETIREMENT THRIFT INVESTMENT BOARD

Sunshine Act Meeting Federal Retirement Thrift Investment Board

TIME AND DATE: 8:00 a.m. (EDT) September 16, 1996.

PLACE: 4th Floor, Conference Room, 1250 H Street, N.W., Washington, D.C.

STATUS: Open.

MATTERS TO BE CONSIDERED:

1. Approval of the minutes of the August 19, 1996, Board meeting.

2. Thrift Savings Plan activity report by the Executive Director.

3. Review of FY 1996 expenditures, approval of FY 1997 proposed budget, and review of FY 1996 estimates.

CONTACT PERSON FOR MORE INFORMATION: Thomas J. Trabucco, Director, Office of Eternal Affairs, (202) 942–1640.

Date: September 3, 1996.

Roger W. Mehle,

Executive Director, Federal Retirement Thrift Investment Board.

[FR Doc. 96–22899 Filed 9–4–96; 9:48 am]

BILLING CODE 6760–01–M

DEPARTMENT OF HEALTH AND HUMAN SERVICES

Centers for Disease Control and Prevention (CDC)

Addressing Immunization Information Systems Barriers Meeting

The National Immunization Program (NIP) of the Centers for Disease Control and Prevention (CDC), announces the following meeting.

Name: Addressing Immunization Information Systems Barriers.

Time and Date: 9 a.m.-4 p.m., September 12, 1996.

Place: Office of the National Immunization Program, CDC, Corporate Square Office Park, Building 12, Third Floor Conference Room, Atlanta, Georgia 30329, telephone 404/639–8250.

Status: Open to the public for observation and comment, limited only by the space available. To reserve a seat, please pre-register by calling the contact person listed below.

Purpose: The purpose of this meeting is to identify barriers to the development and implementation of automated immunization information systems, and strategies to address these barriers. Agenda items will include discussion between information systems experts, public health officials, and other healthcare providers.

Agenda items are subject to change as priorities dictate.

Contact Person for More Information: Jim Harrison, Director, Data Management Division, NIP, CDC, Corporate Square Boulevard, M/S E–62, Atlanta, Georgia 30329, telephone 404/639–8250.

Dated: August 28, 1996.

Carolyn J. Russell,

Director, Management Analysis and Services Office, Centers for Disease Control and Prevention (CDC).

[FR Doc. 96–22763 Filed 9–5–96; 8:45 am]

BILLING CODE 4163–18–M

Health Care Financing Administration

[Document Identifier: HCFA–1964]

Agency Information Collection Activities: Proposed Collection; Comment Request

AGENCY: Health Care Financing Administration, HHS.

In compliance with the requirement of section 3506(c)(2)(A) of the Paperwork Reduction Act of 1995, the Health Care Financing Administration (HCFA), Department of Health and Human Services, is publishing the following summaries of proposed collections for public comment. Interested persons are invited to send comments regarding this burden estimate or any other aspect of this collection of information, including any of the following subjects: (1) The necessity and utility of the proposed information collection for the proper performance of the agency's functions; (2) the accuracy of the estimated burden; (3) ways to enhance the quality, utility, and clarity of the information to be collected; and (4) the use of automated collection techniques or other forms of information technology to minimize the information collection burden.

1. HCFA–1964 *Type of Information Collection Request:* Reinstatement, without change, of previously approved collection for which approval has expired; *Title of Information Collection:* Request for Review of Part B Medicare Claim and Supporting regulation 42 CFR 405.807; *Form No.:* HCFA–1964; *Use:* This form is completed by beneficiaries, representative, or assignees who wish to pursue their statutory appeal rights by requesting a review of an initial determination made by a Part B carrier on a claim for medical and other health services. 42 CFR 405.807 is the regulation supporting this collection of information; *Frequency:* On occasion; *Affected Public:* Individuals or households, not for profit institutions; *Number of Respondents:* 7,200,000; *Total Annual Responses:* 7,200,000; *Total Annual Hours:* 1,800,000.

To obtain copies of the supporting statement for the proposed paperwork collections referenced above, access HCFA's WEB SITE ADDRESS at http://www.hcfa.gov, or to obtain the supporting statement and any related forms, E-mail your request, including your address and phone number, to Paperwork@hcfa.gov, or call the Reports Clearance Office on (410) 786–1326. Written comments and recommendations for the proposed information collections must be mailed within 60 days of this notice directly to the HCFA Paperwork Clearance Officer designated at the following address: HCFA, Office of Financial and Human Resources, Management Planning and Analysis Staff, Attention: John Burke, Room C2–26–17, 7500 Security Boulevard, Baltimore, Maryland 21244–1850.

Dated: August 28, 1996.

Edwin J. Glatzel,

Director, Management Planning and Analysis Staff, Office of Financial and Human Resources, Health Care Financing Administration.

[FR Doc. 96–22718 Filed 9–5–96; 8:45 am]

BILLING CODE 4120–03–P

[(HCFA-R–13, 2567–A]

Agency Information Collection Activities: Submission for OMB Review; Comment Request

In compliance with the requirement of section 3506(c)(2)(A) of the Paperwork Reduction Act of 1995, the Health Care Financing Administration (HCFA), Department of Health and Human Services, has submitted to the Office of Management and Budget (OMB) the following proposal for the collection of information. Interested persons are invited to send comments regarding the burden estimate or any other aspect of this collection of information, including any of the following subjects: (1) The necessity and utility of the proposed information collection for the proper performance of the agency's functions; (2) the accuracy of the estimated burden; (3) ways to enhance the quality, utility, and clarity of the information to be collected; and (4) the use of automated collection techniques or other forms of information technology to minimize the information collection burden.

1. *Type of Information Collection Request:* Revision of a currently approved collection; *Title of Information Collection:* Conditions of Coverage for Organ Procurement Organizations; *Form No.:* HCFA–R–13; *Use:* Organ procurement organizations are required to submit accurate data to HCFA concerning population and information on donors and organs on an annual basis in order to assure maximum effectiveness in the procurement and distribution of organs. Frequency: Annually; *Affected Public:* Not-for-profit institutions; *Number of Respondents:* 66; *Total Annual Responses:* 66; *Total Annual Hours Requested:* 1.

2. *Type of Information Collection Request:* Extension of a currently

approved collection; *Title of Information Collection:* Statement of Deficiencies and Plan of Correction; *Form No.:* HCFA–2567–A; *Use:* This Paperwork package provides information regarding deficiencies for Organ Procurement Organizations (OPO) as well as deficiencies noted during periodic facility and laboratory certification surveys. This information is used to make decisions concerning OPO redesignation, certification/recertification of health care facilities participating in the Medicare/Medicaid Programs, and laboratories regulated by CLIA. *Frequency:* Annually and Biennially; *Affected Public:* State, Local or Tribal Governments, Business or other for-profit, Not-for-profit institutions, and Federal Government; *Number of Respondents:* 49,200; *Total Annual Responses:* 98,400; *Total Annual Hours Requested:* 196,800.

To request copies of the proposed paperwork collections referenced above, E-mail your request, including your address, to Paperwork@hcfa.gov, or call the Reports Clearance Office on (410) 786–1326. Written comments and recommendations for the proposed information collections should be sent within 30 days of this notice directly to the OMB Desk Officer designated at the following address: OMB Human Resources and Housing Branch, Attention: Allison Eydt, New Executive Office Building, Room 10235, Washington, D.C. 20503.

Date: August 28, 1996.

Edwin J. Glatzel,

Director, Management Planning and Analysis Staff, Office of Financial and Human Resources, Health Care Financing Administration.

[FR Doc. 96–22714 Filed 9–5–96; 8:45 am]

BILLING CODE 4120–03–P

National Institutes of Health

Opportunity for a Cooperative Research and Development Agreement

National Heart, Lung and Blood Institute (NHLBI); Opportunity for a Cooperative Research and Development Agreement (CRADA) for the development of different therapeutic modalities to raise plasma concentrations of the enzyme lecithin cholesterol acyltransferase (LCAT) for the treatment of atherosclerosis and LCAT deficiency.

AGENCY: National Institutes of Health, PHS, HHS.

ACTION: Notice.

SUMMARY: In humans, the development of atherosclerosis is positively and inversely correlated with the plasma levels of low density lipoproteins (LDL) and high density lipoproteins (HDL) respectively. LCAT, the major enzyme involved in the esterification of free cholesterol present in circulating plasma lipoproteins, is a major determinant of plasma HDL concentrations. Recent studies have established that transgenic rabbits overexpressing human LCAT have 6–7 fold higher plasma HDL levels than control, non-transgenic siblings. In addition, LCAT transgenic rabbits have reduced plasma concentrations of the atherogenic LDL and apoB-containing lipoproteins. This lipoprotein phenotype characterized by elevated plasma HDL and reduced LDL levels leads to marked protection against the development of diet-induced atherosclerosis in LCAT transgenic rabbits compared to control animals.

The NHLBI of the NIH is seeking capability statements from parties interested in entering into a CRADA on the development of different therapeutic modalities to raise plasma concentrations of the enzyme lecithin cholesterol acyltransferase (LCAT) for the treatment of atherosclerosis and LCAT deficiency. This project is with the Molecular Disease Branch, National Heart Lung and Blood Institute, National Institutes of Health, Bethesda, Maryland. The goals are to use the respective strengths of both parties to achieve one or more of the following:

(1) Evaluate the feasibility of gene therapy utilizing the LCAT gene and suitable vectors as a treatment approach for the prevention of atherosclerosis in animal models as well as patients with premature cardiovascular disease; and,

(2) Evaluate the use of gene therapy to correct LCAT deficiency in LCAT knockout mice models systems and patients with LCAT deficiency; and,

(3) Develop and evaluate the anti-atherogenic properties of pharmacological agents that raise plasma concentrations of LCAT.

It is anticipated that the commercial collaborator(s) will participate in ongoing studies on one or both of the research projects involving (1) the transfer of the human LCAT gene in animal models and patients with atherosclerosis or LCAT deficiency and (2) the development of pharmacologic agents that will increase plasma concentrations of LCAT. It is highly desirable that the collaborator have the resources to provide new effective vectors for the long term *in vivo* expression of the LCAT gene. The collaborator may also be expected to contribute financial support under this CRADA for supplies and personnel to support these projects.

CRADA capability statements should be submitted to Ms. Lili Portilla, Technology Transfer Specialist, National Heart, Lung, and Blood Institute, Technology Transfer and Commercialization Team, 31 Center Drive MSC 2490, Bldg. 31/Room 1B32, Bethesda, Maryland 20892–2490, Phone: (301) 402–5579, Fax: (301) 594–3080. Capability statements must be received by the NHLBI on or before October 7, 1996.

The NHLBI has applied for patents claiming this core technology. Non-exclusive and/or exclusive licenses for these patents covering core aspects of this project are available to interested parties. Licensing inquiries regarding this technology should be referred to Ms. Carol Lavrich, Licensing Specialist, NIH Office of Technology Transfer, 6011 Executive Blvd., Suite 325, Rockville, Maryland, 20852–3804, Phone: (301) 496–7735, Ext. 287, Fax: (301) 402–0220.

Dated: August 29, 1996.

Sheila Merritt,

Executive Officer, NHLBI.

[FR Doc. 96–22758 Filed 9–5–96; 8:45 am]

BILLING CODE 4140–01–M

National Library of Medicine; Amended Notice of Meeting

Notice is hereby given of a change in the meeting of the Board of Regents, National Library of Medicine, September 24–25, 1996, Board Room of the National Library of Medicine, Building 38, which was published in the Federal Register on August 19, 1996. (61 FR 43066).

The meeting was to have been open to the public on September 24 from 9 a.m. to 4:30 p.m., but has been changed to be open from 9 a.m. to approximately 11:25 a.m. and 12 noon to approximately 4:15 p.m. The meeting was to have been closed to the public on September 24 from 4:30 to 5 p.m., but has been changed to be closed from 11:25 a.m. to 12 noon, and from 3:45 to 4:15 p.m.

As previously announced, the meeting will be open to the public on September 25 from 9 a.m. to adjournment.

Dated: August 30, 1996.

Margery G. Grubb,

Senior NIH Committee Management Specialist.

[FR Doc. 96–22757 Filed 9–5–96; 8:45 am]

BILLING CODE 4410–01–M

DEPARTMENT OF HOUSING AND URBAN DEVELOPMENT

Office of the Assistant Secretary for Community Planning and Development; Federal Property Suitable as Facilities to Assist the Homeless

[Docket No. FR–4124–N–02]

AGENCY: Office of the Assistant Secretary for Community Planning and Development, HUD.

ACTION: Notice.

SUMMARY: This Notice identifies unutilized, underutilized, excess, and surplus Federal property reviewed by HUD for suitability for possible use to assist the homeless.

FOR FURTHER INFORMATION CONTACT: Mark Johnston, room 7256, Department of Housing and Urban Development, 451 Seventh Street SW, Washington, DC 20410; telephone (202) 708–1226; TDD number for the hearing- and speech-impaired (202) 708–2565 (these telephone numbers are not toll-free), or call the toll-free Title V information line at 1–800–927–7588.

SUPPLEMENTARY INFORMATION: In accordance with 24 CFR Part 581 and section 501 of the Stewart B. McKinney Homeless Assistance Act (42 U.S.C. 11411), as amended, HUD is publishing this Notice to identify Federal buildings and other real property that HUD has reviewed for suitability for use to assist the homeless. The properties were reviewed using information provided to HUD by Federal landholding agencies regarding unutilized and underutilized buildings and real property controlled by such agencies or by GSA regarding its inventory of excess or surplus Federal property. This Notice is also published in order to comply with the December 12, 1988 Court Order in *National Coalition for the Homeless* v. *Veterans Administration*, No. 88–2503–OG (D.D.C.).

Properties reviewed are listed in this Notice according to the following categories: Suitable/available, suitable/unavailable, suitable/to be excess, and unsuitable. The properties listed in the three suitable categories have been reviewed by the landholding agencies, and each agency has transmitted to HUD: (1) Its intention to make the property available for use to assist the homeless, (2) its intention to declare the property excess to the agency's needs, or (3) a statement of the reasons that the property cannot be declared excess or made available for use as facilities to assist the homeless.

Properties listed as suitable/available will be available exclusively for homeless use for a period of 60 days from the date of this Notice. Homeless assistance providers interested in any such property should send a written expression of interest to HHS, addressed to Brian Rooney, Division of Property Management, Program Support Center, HHS, room 5B–41, 5600 Fishers Lane, Rockville, MD 20857; (301) 443–2265. (This is not a toll-free number.) HHS will mail to the interested provider an application packet, which will include instructions for completing the application. In order to maximize the opportunity to utilize a suitable property, providers should submit their written expressions of interest as soon as possible. For complete details concerning the processing of applications, the reader is encouraged to refer to the interim rule governing this program, 24 CFR Part 581.

For properties listed as suitable/to be excess, that property may, if subsequently accepted as excess by GSA, be made available for use by the homeless in accordance with applicable law, subject to screening for other Federal use. At the appropriate time, HUD will publish the property in a Notice showing it as either suitable/available or suitable/unavailable.

For properties listed as suitable/unavailable, the landholding agency has decided that the property cannot be declared excess or made available for use to assist the homeless, and the property will not be available.

Properties listed as unsuitable will not be made available for any other purpose for 20 days from the date of this Notice. Homeless assistance providers interested in a review by HUD of the determination of unsuitability should call the toll-free information line at 1–800–927–7588 for detailed instructions or write a letter to Mark Johnston at the address listed at the beginning of this Notice. Included in the request for review should be the property address (including zip code), the date of publication in the Federal Register, the landholding agency, and the property number.

For more information regarding particular properties identified in this Notice (*i.e.*, acreage, floor plan, existing sanitary facilities, exact street address), providers should contact the appropriate landholding agencies at the following addresses: Army: Mr. Derrick Mitchell, CECPW–FP, U.S. Army Center for Public Works, 7701 Telegraph Road, Alexandria, VA 22310–3862; (703) 428–6083; (These are not toll-free numbers).

Dated: August 30, 1996.

Jacquie M. Lawing,

Deputy Assistant Secretary for Economic Development.

Title V, Federal Surplus Property Program Federal Register Report for 09/06/96

Suitable/Available Properties

Buildings (by State)

Alabama

Bldg. 3702, Fort Rucker
Ft. Rucker Co: Dale AL 36362–5138
Landholding Agency: Army
Property Number: 219340183
Status: Unutilized
Comment: 5310 sq. ft., 2-story wood, needs rehab, most recent use—barracks, off-site use only

Bldg. 3703, Fort Rucker
Ft. Rucker Co: Dale AL 36362–5138
Landholding Agency: Army
Property Number: 219340184
Status: Unutilized
Comment: 5310 sq. ft., 2-story wood, needs rehab, most recent use—barracks, off-site use only

Bldg. 3704, Fort Rucker
Ft. Rucker Co: Dale AL 36362–5138
Landholding Agency: Army
Property Number: 219340185
Status: Unutilized
Comment: 5310 sq. ft., 2-story wood, needs rehab, most recent use—barracks, off-site use only

Bldg. 3705, Fort Rucker
Ft. Rucker Co: Dale AL 36362–5138
Landholding Agency: Army
Property Number: 219340186
Status: Unutilized
Comment: 2975 sq. ft., 1-story wood, needs rehab, most recent use—general purpose, off-site use only

Bldg. 3706, Fort Rucker
Ft. Rucker Co: Dale AL 36362–5138
Landholding Agency: Army
Property Number: 219340187
Status: Unutilized
Comment: 2975 sq. ft., 1-story wood, needs rehab, most recent use—barracks, general purpose, off-site use only

Bldg. 3707, Fort Rucker
Ft. Rucker Co: Dale AL 36362–5138
Landholding Agency: Army
Property Number: 219340188
Status: Unutilized
Comment: 5310 sq. ft., 2-story wood, needs rehab, presence of asbestos, most recent use—barracks, off-site use only

Bldg. 3708, Fort Rucker
Ft. Rucker Co: Dale AL 36362–5138
Landholding Agency: Army
Property Number: 219340189
Status: Unutilized
Comment: 5310 sq. ft., 2-story wood, needs rehab, presence of asbestos, most recent use—barracks, off-site use only

Bldg. T274, Fort McClellan
Ft. McClellan Co: Calhoun AL 36205–5000
Landholding Agency: Army
Property Number: 219440389
Status: Unutilized

Comment: 3967 sq. ft., 1-story wood, most recent use—clinic, needs rehab, off-site use only

Bldg. T421, Fort McClellan
Ft. McClellan Co: Calhoun AL 36205–5000
Landholding Agency: Army
Property Number: 219440393
Status: Unutilized
Comment: 1602 sq. ft., 1-story wood, most recent use—support activity, needs rehab, off-site use only

7 Bldgs.
Fort. McClellan
#829–831, 833, 835–836, 844
Ft. McClellan Co: Calhoun Al 36205–5000
Landholding Agency: Army
Property Number: 219440395
Status: Unutilized
Comment: 4425 sq. ft. each, 2-story, most recent use—barracks, off-site use only

Bldg. T00893
Fort. McClellan
Ft. McClellan Co: Calhoun AL 36205–5000
Landholding Agency: Army
Property Number: 219440396
Status: Unutilized
Comment: 3269 sq. ft., each, 1-story, most recent use—chapel, off-site use only

Bldgs. T903, T909
Fort. McClellan
Ft. McClellan Co: Calhoun Al 36205–5000
Landholding Agency: Army
Property Number: 219440397
Status: Unutilized
Comment: 1677 sq. ft. and 1166 sq. ft. bldgs., most recent use—classroom, off-site use only

Bldgs. T916–T917, T925
Fort McClellan
Ft. McClellan Co: Calhoun Al 36205–5000
Landholding Agency: Army
Property Number: 219440398
Status: Unutilized
Comment: 3075–4500 sq. ft., 1-story, most recent use—barracks, off-site use only

Bldg. 60101
Shell Army Heliport
Ft. Rucker Co: Dale AL 36362–5000
Landholding Agency: Army
Property Number: 219520152
Status: Unutilized
Comment: 6082 sq. ft., 1-story, most recent use—airfield fire station, off-site use only

Bldg. 60100
Shell Army Heliport
Ft. Rucker Co: Dale AL 36362–5000
Landholding Agency: Army
Property Number: 219520153
Status: Unutilized
Comment: 64 sq. ft., mental structure, most recent use—entry station, off-site use only

Bldg. 60103
Shell Army Heliport
Ft. Rucker Co: Dale AL 36362–5000
Landholding Agency: Army
Property Number: 219520154
Status: Unutilized
Comment: 12516 sq. ft., 2-story, most recent use—admin., off-site use only

Bldg. 60110
Shell Army Heliport
Ft. Rucker Co: Dale AL 36362–5000
Landholding Agency: Army
Property Number: 219520155
Status: Unutilized
Comment: 8319 sq. ft., 1-story, most recent use—admin., off-site use only

Bldg. 60113
Shell Army Heliport
Ft. Rucker Co: Dale AL 36362–5000
Landholding Agency: Army
Property Number: 219520156
Status: Unutilized
Comment: 4000 sq. ft., 1-story, most recent use—admin., off-site use only

Bldgs. 832, 834
Fort McClellan
Ft. McClellan Co: Calhoun AL 36205–5000
Landholding Agency: Army
Property Number: 219540010
Status: Unutilized
Comment: 4425 sq. ft. each, most recent use—barracks w/o mess, off-site use only

Bldgs. 2802, 2805, 3811
Fort Rucker
Ft. Rucker Co: Dale AL 36362–
Landholding Agency: Army
Property Number: 219620662
Status: Unutilized
Comment: #2802=13,082 sq. ft., #2805=13,082 sq. ft., #3811=3000 sq. ft., most recent use—admin., needs repair, off-site use only

Alaska

Bldg. 400
Fort Richardson
Ft. Richardson AK 99505–
Landholding Agency: Army
Property Number: 219440400
Status: Unutilized
Comment: 13056 sq. ft., 2-story wood frame, presence of lead paint and asbestos, off-site use only

Bldg. 402
Fort Richardson
Ft. Richardson AK 99505–
Landholding Agency: Army
Property Number: 219440401
Status: Unutilized
Comment: 13056 sq. ft., 2-story wood, presence of lead paint and asbestos, off-site use only

Bldg. 407
Fort Richardson
Ft. Richardson AK 99505–
Landholding Agency: Army
Property Number: 219440402
Status: Unutilized
Comment: 13056 sq. ft., 2-story wood frame, presence of lead paint and asbestos, off-site use only

Bldg. 1168
Fort Wainwright
Ft. Wainwright Co: Fairbanks AK 99703–
Landholding Agency: Army
Property Number: 219610636
Status: Underutilized
Comment: 6455 sq. ft., concrete, presence of asbestos, most recent use—warehouse

Bldg. 4057
Fort Wainwright
Ft. Wainwright Co: Fairbanks AK 99703–
Landholding Agency: Army
Property Number: 219610637
Status: Underutilized
Comment: 2604 sq. ft., presence of asbestos/POL, most recent use—sewage/waste water treatment

Arizona

Bldg. 70117—Fort Huachuca
Sierra Vista Co: Cochise AZ 85635–
Landholding Agency: Army
Property Number: 219120306
Status: Excess
Comment: 3434 sq. ft., 1 story wood structure, presence of asbestos, most recent use—general instructional, off-site use only

Bldg. 70118—Fort Huachuca
Sierra Vista Co: Cochise AZ 85635–
Landholding Agency: Army
Property Number: 219120307
Status: Excess
Comment: 3434 sq. ft., 1 story wood structure, presence of asbestos, most recent use—general instructional, off-site use only

Bldg. 70119—Fort Huachuca
Sierra Vista Co: Cochise AZ 85635–
Landholding Agency: Army
Property Number: 219120308
Status: Excess
Comment: 3434 sq. ft., 1 story wood structure, presence of asbestos, most recent use—general instructional, off-site use only

Bldg. 70120—Fort Huachuca
Sierra Vista Co: Cochise AZ 85635–
Landholding Agency: Army
Property Number: 219120309
Status: Excess
Comment: 3434 sq. ft., 1 story wood structure, presence of asbestos, most recent use—admin. gen. purpose, off-site use only

Bldg. 70225—Fort Huachuca
Sierra Vista Co: Cochise AZ 85635–
Landholding Agency: Army
Property Number: 219120310
Status: Excess
Comment: 3813 sq. ft., 1 story wood structure, presence of asbestos, most recent use—admin. gen. purpose, off-site use only

Bldg. 83006—Fort Huachuca
Sierra Vista Co: Cochise AZ 85635–
Landholding Agency: Army
Property Number: 219120311
Status: Excess
Comment: 2062 sq. ft., 1 story wood structure, presence of asbestos, most recent use—admin. gen. purpose, off-site use only

Bldg. 83007—Fort Huachuca
Sierra Vista Co: Cochise AZ 85635–
Landholding Agency: Army
Property Number: 219120312
Status: Excess
Comment: 2000 sq. ft., 2 story wood structure, presence of asbestos, most recent use—admin. gen. purpose, off-site use only

Bldg. 83008—Fort Huachuca
Sierra Vista Co: Cochise AZ 85635–
Landholding Agency: Army
Property Number: 219120313
Status: Excess
Comment: 2192 sq. ft., 2 story wood structure, presence of asbestos, most recent use—admin. gen. purpose, off-site use only

Bldg. 83015—Fort Huachuca
Sierra Vista Co: Cochise AZ 85635–
Landholding Agency: Army
Property Number: 219120314
Status: Excess
Comment: 2325 sq. ft., 1 story wood structure, presence of asbestos, most recent use—admin. gen. purpose, off-site use only

Bldg. 81001

Fort Huachuca
Sierra Vista Co: Cochise AZ 85635–
Landholding Agency: Army
Property Number: 219240720
Status: Unutilized
Comment: 4386 sq. ft., 2 story wood frame, possible asbestos, most recent use—administrative, scheduled to become vacant in 6 months, off-site use only

Bldg. 81020
Fort Huachuca
Sierra Vista Co: Cochise AZ 85635–
Landholding Agency: Army
Property Number: 219240722
Status: Unutilized
Comment: 4386 sq. ft., 2 story wood frame, possible asbestos, most recent use—administrative, scheduled to become vacant in 6 months, off-site use only

Bldg. 67204
Fort Huachuca
Sierra Vista Co: Cochise AZ 85635–
Landholding Agency: Army
Property Number: 219240723
Status: Unutilized
Comment: 4332 sq. ft., 2 story wood frame, possible asbestos, most recent use—administrative, scheduled to become vacant in 6 months, off-site use only

Bldg. 66151
Fort Huachuca
Sierra Vista Co: Cochise AZ 85635–
Landholding Agency: Army
Property Number: 219240728
Status: Unutilized
Comment: 4194 sq. ft., 2 story wood frame, possible asbestos, most recent use—barracks, scheduled to become vacant in 6 months, off-site use only

Bldg. 72219
Fort Huachuca
Sierra Vista Co: Cochise AZ 85635–
Landholding Agency: Army
Property Number: 219240729
Status: Unutilized
Comment: 2730 sq. ft., 1 story wood frame, possible asbestos, most recent use—barracks, scheduled to become vacant in 6 months, off-site use only

Bldg. 72220
Fort Huachuca
Sierra Vista Co: Cochise AZ 85635–
Landholding Agency: Army
Property Number: 219240730
Status: Unutilized
Comment: 2879 sq. ft., 1 story wood frame, possible asbestos, most recent use—barracks, scheduled to become vacant in 6 months, off-site use only

Bldg. 72221
Fort Huachuca
Sierra Vista Co: Cochise AZ 85635–
Landholding Agency: Army
Property Number: 219240731
Status: Unutilized
Comment: 3736 sq. ft., 1 story wood frame, possible asbestos, most recent use—barracks, scheduled to become vacant in 6 months, off-site use only

Bldg. 67108
Fort Huachuca
Sierra Vista Co: Cochise AZ 85635–
Landholding Agency: Army
Property Number: 219240733
Status: Unutilized
Comment: 2403 sq. ft., 1 story wood frame, possible asbestos, most recent use—classrooms, scheduled to become vacant in 6 months, off-site use only

Bldg. 70226
Fort Huachuca
Sierra Vista Co: Cochise AZ 85635–
Landholding Agency: Army
Property Number: 219240734
Status: Unutilized
Comment: 1868 sq. ft., 1 story wood frame, possible asbestos, most recent use—classrooms, scheduled to become vacant in 6 months, off-site use only

Bldg. 71116
Fort Huachuca
Sierra Vista Co: Cochise AZ 85635–
Landholding Agency: Army
Property Number: 219240735
Status: Unutilized
Comment: 3470 sq. ft., 1 story wood frame, possible asbestos, most recent use—classrooms, scheduled to become vacant in 6 months, off-site use only

Bldg. 71215
Fort Huachuca
Sierra Vista Co: Cochise AZ 85635–
Landholding Agency: Army
Property Number: 219240736
Status: Unutilized
Comment: 4854 sq. ft., 1 story wood frame, possible asbestos, most recent use—classrooms, scheduled to become vacant in 6 months, off-site use only

Bldg. 70110
Fort Huachuca
Sierra Vista Co: Cochise AZ 85635–
Landholding Agency: Army
Property Number: 219240739
Status: Unutilized
Comment: 2675 sq. ft., 1 story wood frame, possible asbestos, scheduled to become vacant in 6 months, most recent use—offices, off-site use only

Bldg. 70111
Fort Huachuca
Sierra Vista Co: Cochise AZ 85635–
Landholding Agency: Army
Property Number: 219240740
Status: Unutilized
Comment: 2800 sq. ft., 1 story wood frame, possible asbestos, scheduled to become vacant in 6 months, most recent use—offices, off-site use only

Bldg. 70113
Fort Huachuca
Sierra Vista Co: Cochise AZ 85635–
Landholding Agency: Army
Property Number: 219240741
Status: Unutilized
Comment: 2800 sq. ft., 1 story wood frame, possible asbestos, scheduled to become vacant in 6 months, most recent use—offices, off-site use only

Bldg. 70114
Fort Huachuca
Sierra Vista Co: Cochise AZ 85635–
Landholding Agency: Army
Property Number: 219240742
Status: Unutilized
Comment: 2544 sq. ft., 1 story wood frame, possible asbestos, scheduled to become vacant in 6 months, most recent use—offices, off-site use only

Bldg. 70115
Fort Huachuca
Sierra Vista Co: Cochise AZ 85635–
Landholding Agency: Army
Property Number: 219240743
Status: Unutilized
Comment: 2544 sq. ft., 1 story wood frame, possible asbestos, scheduled to become vacant in 6 months, most recent use—offices, off-site use only

Bldg. 70123
Fort Huachuca
Sierra Vista Co: Cochise AZ 85635–
Landholding Agency: Army
Property Number: 219240744
Status: Unutilized
Comment: 3298 sq. ft., 1 story wood frame, possible asbestos, scheduled to become vacant in 6 months, most recent use—offices, off-site use only

Bldg. 70124
Fort Huachuca
Sierra Vista Co: Cochise AZ 85635–
Landholding Agency: Army
Property Number: 219240745
Status: Unutilized
Comment: 3298 sq. ft., 1 story wood frame, possible asbestos, scheduled to become vacant in 6 months, most recent use—offices, off-site use only

Bldg. 70126
Fort Huachuca
Sierra Vista Co: Cochise AZ 85635–
Landholding Agency: Army
Property Number: 219240746
Status: Unutilized
Comment: 3343 sq. ft., 1 story wood frame, possible asbestos, scheduled to become vacant in 6 months, most recent use—offices, off-site use only

Bldg. 70210
Fort Huachuca
Sierra Vista Co: Cochise AZ 85635–
Landholding Agency: Army
Property Number: 219240747
Status: Unutilized
Comment: 3258 sq. ft., 1 story wood frame, possible asbestos, scheduled to become vacant in 6 months, most recent use—offices, off-site use only

Bldg. 70211
Fort Huachuca
Sierra Vista Co: Cochise AZ 85635–
Landholding Agency: Army
Property Number: 219240748
Status: Unutilized
Comment: 2966 sq. ft., 1 story wood frame, possible asbestos, scheduled to become vacant in 6 months, most recent use—offices, off-site use only

Bldg. 70221
Fort Huachuca
Sierra Vista Co: Cochise AZ 85635—
Landholding Agency: Army
Property Number: 219240749
Status: Unutilized
Comment: 2526 sq. ft., 1 story wood frame, possible asbestos, scheduled to become vacant in 6 months, most recent use—offices, off-site use only

Bldg. 70222
Fort Huachuca
Sierra Vista Co: Cochise AZ 85635—
Landholding Agency: Army
Property Number: 219240750
Status: Unutilized

Comment: 1627 sq. ft., 1 story wood frame, possible asbestos, scheduled to become vacant in 6 months, most recent use—offices, off-site use only

Bldg. 71214
Fort Huachuca
Sierra Vista Co: Cochise AZ 85635—
Landholding Agency: Army
Property Number: 219240751
Status: Unutilized
Comment: 3779 sq. ft., 1 story wood frame, possible asbestos, scheduled to become vacant in 6 months, most recent use—offices, off-site use only

Bldg. 82013
Fort Huachuca
Sierra Vista Co: Cochise AZ 85635–
Landholding Agency: Army
Property Number: 219240752
Status: Unutilized
Comment: 2193 sq. ft., 1 story wood frame, possible asbestos, scheduled to become vacant in 6 months, most recent use—offices, off-site use only

Bldg. 90327
Fort Huachuca
Sierra Vista Co: Cochise AZ 85635—
Landholding Agency: Army
Property Number: 219240753
Status: Unutilized
Comment: 279 sq. ft., 1 story wood frame, possible asbestos, scheduled to become vacant in 6 months, most recent use—offices, off-site use only

Bldg. 71213
Fort Huachuca
Sierra Vista Co: Cochise AZ 85635—
Landholding Agency: Army
Property Number: 219240754
Status: Unutilized
Comment: 3779 sq. ft., 1 story wood frame, possible asbestos, scheduled to become vacant in 6 months, most recent use—storehouse, off-site use only

Bldg. 82007
Fort Huachuca
Sierra Vista Co: Cochise AZ 85635—
Landholding Agency: Army
Property Number: 219240755
Status: Unutilized
Comment: 4386 sq. ft., 2 story wood frame, possible asbestos, scheduled to become vacant in 6 months, most recent use—storehouse, off-site use only

Bldg. 82009
Fort Huachuca
Sierra Vista Co: Cochise AZ 85635–
Landholding Agency: Army
Property Number: 219240756
Status: Unutilized
Comment: 2444 sq. ft., 2 story wood frame, possible asbestos, scheduled to become vacant in 6 months, most recent use—storehouse, off-site use only

Bldg. 70216
Fort Huachuca
Sierra Vista Co: Cochise AZ 85635—
Landholding Agency: Army
Property Number: 219310287
Status: Excess
Comment: 3725 sq. ft., 1-story wood, presence of asbestos, most recent use—admin., off-site use only

Bldg. 70215
Fort Huachuca
Sierra Vista Co: Cochise AZ 85635—
Landholding Agency: Army
Property Number: 219310288
Status: Excess
Comment: 3706 sq. ft., 1-story wood, presence of asbestos, most recent use—admin., off-site use only

Bldg. 70214
Fort Huachuca
Sierra Vista Co: Cochise AZ 85635—
Landholding Agency: Army
Property Number: 219310289
Status: Unutilized
Comment: 3142 sq. ft., 1-story wood structure, presence of asbestos, most recent use—admin., off-site use only

Bldg. 70212
Fort Huachuca
Sierra Vista Co: Cochise AZ 85635–
Landholding Agency: Army
Property Number: 219310290
Status: Excess
Comment: 3534 sq. ft., 1-story wood, presence of asbestos, most recent use—admin., off-site use only

Bldg. 70220
Fort Huachuca
Sierra Vista Co: Cochise AZ 85635—
Landholding Agency: Army
Property Number: 219310291
Status: Excess
Comment: 1249 sq. ft., 1-story wood, presence of asbestos, most recent use—admin., off-site use only

Bldg. 70218, Fort Huachuca
Sierra Vista Co: Cochise AZ 85635–
Landholding Agency: Army
Property Number: 219310292
Status: Excess
Comment: 3475 sq. ft., 1-story wood, presence of asbestos, most recent use—classroom, off-site use only

Bldg. 70217, Fort Huachuca
Sierra Vista Co: Cochise AZ 85635–
Landholding Agency: Army
Property Number: 219310293
Status: Excess
Comment: 304 sq. ft., 1-story concrete block, presence of asbestos, most recent use—storage, off-site use only

Bldg. 80010, Fort Huachuca
Sierra Vista Co: Cochise AZ 85635–
Landholding Agency: Army
Property Number: 219310294
Status: Excess
Comment: 2318 sq. ft., 1-story wood, presence of asbestos, most recent use—admin.

Bldg. 84103, Fort Huachuca
Sierra Vista Co: Cochise AZ 85635–
Landholding Agency: Army
Property Number: 219310296
Status: Excess
Comment: 984 sq. ft., 1-story, presence of asbestos and lead paint, most recent use—admin.

Bldg. 67101, Fort Huachuca
Sierra Vista Co: Cochise AZ 85635–
Landholding Agency: Army
Property Number: 219310297
Status: Excess
Comment: 2216 sq. ft., 1-story wood, presence of asbestos and lead paint, most recent use—classroom

Bldg. 30012, Fort Huachuca
Sierra Vista Co: Cochise AZ 85635–
Landholding Agency: Army
Property Number: 219310298
Status: Excess
Comment: 237 sq. ft., 1-story block, most recent use—storage

Bldg. 67221
U.S. Army Intelligence Center, Fort Huachuca
Sierra Vista Co: Cochise AZ 85635–
Landholding Agency: Army
Property Number: 219330235
Status: Unutilized
Comment: 1068 sq. ft., 1-story wood, presence of asbestos, most recent use—office, off-site use only

Bldg. 83102
U.S. Army Intelligence Center, Fort Huachuca
Sierra Vista Co: Cochise AZ 85635–
Landholding Agency: Army
Property Number: 219330236
Status: Unutilized
Comment: 984 sq. ft., 1-story wood, presence of asbestos, most recent use—office, off-site use only

Bldg. 84010
U.S. Army Intelligence Center, Fort Huachuca
Sierra Vista Co: Cochise AZ 85635–
Landholding Agency: Army
Property Number: 219330237
Status: Unutilized
Comment: 2147 sq. ft., 1-story wood, presence of asbestos, most recent use—office, off-site use only

Bldg. 67116
Fort Huachuca
Sierra Vista Co: Cochise AZ 85635–
Landholding Agency: Army
Property Number: 219410243
Status: Unutilized
Comment: 1784 sq. ft.; 1 story; wood; most recent use—admin.; off-site use only

Bldg. 67205
Fort Huachuca
Sierra Vista Co: Cochise AZ 85635–
Landholding Agency: Army
Property Number: 219410244
Status: Unutilized
Comment: 2166 sq. ft.; 2 story; wood; most recent use—admin.; off-site use only

Bldg. 67207
Fort Huachuca
Sierra Vista Co: Cochise AZ 85635–
Landholding Agency: Army
Property Number: 219410245
Status: Unutilized
Comment: 2166 sq. ft.; 2 story; wood; most recent use—admin.; off-site use only

Bldg. 67213
Fort Huachuca
Sierra Vista Co: Cochise AZ 85635–
Landholding Agency: Army
Property Number: 219410246
Status: Unutilized
Comment: 2594 sq. ft.; 1 story; wood; most recent use—admin.; off-site use only

Bldg. 73913
Fort Huachuca
Sierra Vista Co: Cochise AZ 85635–
Landholding Agency: Army
Property Number: 219410247

Status: Unutilized
Comment: 910 sq. ft.; 1 story; wood; most recent use—admin.; off-site use only

Bldg. 80001
Fort Huachuca
Sierra Vista Co: Cochise AZ 85635–
Landholding Agency: Army
Property Number: 219410248
Status: Unutilized
Comment: 1958 sq. ft.; 2 story; wood; most recent use—admin.; off-site use only

Bldg. 83027
Fort Huachuca
Sierra Vista Co: Cochise AZ 85635–
Landholding Agency: Army
Property Number: 219410249
Status: Unutilized
Comment: 1993 sq. ft.; 2 story; wood; most recent use—admin.; off-site use only

Bldg. 84007
Fort Huachuca
Sierra Vista Co: Cochise AZ 85635–
Landholding Agency: Army
Property Number: 219410250
Status: Unutilized
Comment: 2000 sq. ft.; 2 story; wood; most recent use—admin.; off-site use only

Bldg. 68320
Fort Huachuca
Sierra Vista Co: Cochise AZ 85635–
Landholding Agency: Army
Property Number: 219410251
Status: Unutilized
Comment: 1531 sq. ft.; 1 story; wood; most recent use—recreation center; off-site use only

Bldg. 30126
Fort Huachuca
Sierra Vista Co: Cochise AZ 85635–
Landholding Agency: Army
Property Number: 219410252
Status: Unutilized
Comment: 9324 sq. ft.; 1 story; wood; most recent use—maintenance; off-site use only

Bldg. 84014
Fort Huachuca
Sierra Vista Co: Cochise AZ 85635–
Landholding Agency: Army
Property Number: 219410253
Status: Unutilized
Comment: 2260 sq. ft.; 1 story; wood; most recent use—maintenance; off-site use only

Bldg. S–106
Yuma Proving Ground
Yuma Co: Yuma/La Paz AZ 85635–9104
Landholding Agency: Army
Property Number: 219420345
Status: Unutilized
Comment: 1101 sq. ft., 1-story, cold storage bldg., needs repair

Bldgs. 67210, 67217
Fort Huachuca
Sierra Vista Co: Cochise AZ 85635–
Landholding Agency: Army
Property Number: 219420347
Status: Unutilized
Comment: 1165 sq. ft., 1-story wood, presence of asbestos, most recent use—office, off-site use only

Bldg. 8005
Fort Huachuca
Sierra Vista Co: Cochise AZ 85635–
Landholding Agency: Army
Property Number: 219430245
Status: Unutilized
Comment: 1718 sq. ft., 1-story, wood frame, most recent use—instructional bldg., needs repair, off-site use only

Bldg. 80006
Fort Huachuca
Sierra Vista Co: Cochise AZ 85635–
Landholding Agency: Army
Property Number: 219430246
Status: Unutilized
Comment: 1628 sq. ft., 1-story, wood frame, most recent use—instructional bldg., needs repair, off-site use only

Bldg. 83023
Fort Huachuca
Sierra Vista Co: Cochise AZ 85635–
Landholding Agency: Army
Property Number: 219430247
Status: Unutilized
Comment: 1648 sq. ft., 1-story, wood frame, most recent use—instructional bldg., needs repair, off-site use only

Bldg. 81027
Fort Huachuca
Sierra Vista Co: Cochise AZ 85635–
Landholding Agency: Army
Property Number: 219430248
Status: Unutilized
Comment: 2193 sq. ft., 2-story, wood frame, most recent use—admin., needs repair, off-site use only

Bldg. 81028
Fort Huachuca
Sierra Vista Co: Cochise AZ 85635–
Landholding Agency: Army
Property Number: 219430249
Status: Unutilized
Comment: 2193 sq. ft., 2-story, wood frame, most recent use—admin., needs repair, off-site use only

Bldg. 80111
Fort Huachuca
Sierra Vista Co: Cochise AZ 85635–
Landholding Agency: Army
Property Number: 219430250
Status: Unutilized
Comment: 2032 sq. ft., 1-story, wood frame, most recent use—instructional bldg., needs repair, off-site use only

Bldg. 503, Yuma Proving Ground
Yuma Co: Yuma AZ 85635–9104
Landholding Agency: Army
Property Number: 219520073
Status: Underutilized
Comment: 3789 sq. ft., 2-story, major structural changes required to meet floor loading & fire code requirements, presence of asbestos

Bldg. 63001, 80112
Fort Huachuca
Sierra Vista Co: Cochise AZ 85635–
Landholding Agency: Army
Property Number: 219520157
Status: Excess
Comment: 1898–2000 sq. ft., 1-story, presence of asbestos & lead base paint, off-site use only

9 Classroom Facilities
Fort Huachuca
Sierra Vista Co: Cochise AZ 85635–
Location: Bldgs. 67111, 67118, 67124, 67209, 81005, 81006, 81008, 83024, 84003
Landholding Agency: Army
Property Number: 219520158
Status: Excess
Comment: 1044–2602 sq. ft., 1–2 story, presence of asbestos and lead base paint, off-site use only

Bldg. 67214
Fort Huachuca
Sierra Vista Co: Cochise AZ 85635–
Landholding Agency: Army
Property Number: 219520159
Status: Excess
Comment: 955 sq. ft., 1-story, most recent use—rec. bldg., presence of asbestos and lead base paint, off-site use only

2 Storage Facilities
Fort Huachuca
Sierra Vista Co: Cochise AZ 85635–
Location: Bldgs. 72320, 80017
Landholding Agency: Army
Property Number: 219520160
Status: Excess
Comment: 2340 sq. ft., 1–2 story, presence of asbestos and lead base paint, off-site use only

10 Admin. Facilities
Fort Huachuca
Sierra Vista Co: Cochise AZ 85635–
Location: Bldgs. 80025, 80027, 80028, 80102, 81002, 81009, 81102, 83025, 83026, 84008
Landholding Agency: Army
Property Number: 219520161
Status: Excess
Comment: 996–2193 sq. ft., 1–2 story, presence of asbestos and lead base paint, off-site use only

12 Admin. Facilities
Fort Huachuca
Sierra Vista Co: Cochise AZ 85635–
Location: Bldgs. 67110, 67114, 67115, 67121, 67122, 67226, 67228, 70122, 80008, 80009, 80013, 80024
Landholding Agency: Army
Property Number: 219520162
Status: Excess
Comment: 1041–3298 sq. ft., 1–2 story, presence of asbestos and lead base paint, off-site use only

10 Barracks
Fort Huachuca
Sierra Vista Co: Cochise AZ 85635–
Location: Bldgs. 67102–67106, 67125–67129
Landholding Agency: Army
Property Number: 219520163
Status: Excess
Comment: 1352-2291 sq. ft., 2-story, presence of asbestos and lead base paint, off-site use only

Bldg. 73902
Fort Huachuca
Sierra Vista Co: Cochise AZ 85635–
Landholding Agency: Army
Property Number: 219610638
Status: Unutilized
Comment: 5355 sq. ft., presence of asbestos, most recent use—maintenance, off-site use only

9 Bldgs.
Fort Huachuca
Sierra Vista Co: Cochise AZ 85635–
Location: Bldgs. 82002, 82027, 82028, 83021, 83022, 85008, 85009, 85027, 85028
Landholding Agency: Army
Property Number: 219610639
Status: Unutilized

Comment: various sq. ft., presence of asbestos, most recent use—barracks, off-site use only

Bldg. 85005
Fort Huachuca
Sierra Vista Co: Cochise AZ 85635–
Landholding Agency: Army
Property Number: 219610640
Status: Unutilized
Comment: 3515 sq. ft., presence of asbestos, most recent use—dining, off-site use only

21 Bldgs.
Fort Huachuca
Sierra Vista Co: Cochise AZ 85635–
Location: 66057, 66152–66155, 66157–66159, 67201, 80020, 82105, 82106, 83013, 83017, 83020, 84002, 84017, 85015, 85017, 85102, 85105
Landholding Agency: Army
Property Number: 219610641
Status: Unutilized
Comment: various sq. ft., presence of asbestos, most recent use—admin., off-site use only

Bldg. 66055
Fort Huachuca
Sierra Vista Co: Cochise AZ 85635–
Landholding Agency: Army
Property Number: 219610642
Status: Unutilized
Comment: 1946 sq. ft., presence of asbestos, most recent use—recreation, off-site use only

7 Bldgs.
Fort Huachuca
Sierra Vista Co: Cochise AZ 85635–
Location: 30028, 66150, 67360, 71919, 73914, 74909, 82024
Landholding Agency: Army
Property Number: 219610643
Status: Unutilized
Comment: various sq. ft., presence of asbestos, most recent use—storage, off-site use only

7 Bldgs.
Fort Huachucu
Sierra Vista Co: Cochise AZ 85635–
Location: 71210, 71211, 80002, 80014, 82005, 82006, 85103
Landholding Agency: Army
Property Number: 219610644
Status: Unutilized
Comment: Various sq. ft., presence of asbestos, most recent use—classrooms, off-site use only

Bldgs. 13548, 72918
Fort Huachuca
Sierra Vista Co: Cochise AZ 85635–
Landholding Agency: Army
Property Number: 219620663
Status: Unutilized
Comment: #13548=2048 sq. ft., most recent use—maint. shop, #72918=2822 sq. ft., most recent use—storage, possible asbestos/lead base paint, off-site use only

California

Bldg. T–26
Sierra Army Depot
Herlong Co: Lassen CA 96113–
Landholding Agency: Army
Property Number: 219620684
Status: Underutilized
Comment: 15,551 sq. ft., most recent use—guest house, needs repair, off-site use only.

Georgia

Bldg. 5390
Fort Benning
Fort Benning Co: Muscogee GA 31905–
Landholding Agency: Army
Property Number: 219010137
Status: Unutilized
Comment: 2432 sq. ft., most recent use—dining room, needs rehab.

Bldg. 5362
Fort Benning Co: Muscogee GA 31905–
Landholding Agency: Army
Property Number: 219010147
Status: Unutilized
Comment: 5559 sq. ft., most recent use—service club, needs rehab.

Bldg. 5392
Fort Benning Co: Muscogee GA 31905–
Landholding Agency: Army
Property Number: 219010151
Status: Unutilized
Comment: 2432 sq. ft., most recent use—dining room, needs rehab.

Bldg. 5391
Fort Benning Co: Muscogee GA 31905–
Landholding Agency: Army
Property Number: 219010152
Status: Unutilized
Comment: 2432 sq. ft., most recent use—dining room, needs rehab.

Bldg. 4487
Fort Benning
Fort Benning Co: Muscogee GA 31905–
Landholding Agency: Army
Property Number: 219011681
Status: Unutilized
Comment: 1868 sq. ft., most recent use—telephone exchange bldg., needs substantial rehabilitation, 1 floor.

Bldg. 4319
Fort Benning
Fort Benning Co: Muscogee GA 31905–
Landholding Agency: Army
Property Number: 219011683
Status: Unutilized
Comment: 2584 sq. ft., most recent use—vehicle maintenance shop, needs substantial rehabilitation, 1 floor.

Bldg. 3400
Fort Benning
Fort Benning Co: Muscogee GA 31905–
Landholding Agency: Army
Property Number: 219011694
Status: Unutilized
Comment: 2570 sq. ft., most recent use—fire station, needs substantial rehabilitation, 1 floor.

Bldg. 2285
Fort Benning
Fort Benning Co: Muscogee GA 31905–
Landholding Agency: Army
Property Number: 219011704
Status: Unutilized
Comment: 4574 sq. ft., most recent use—clinic, needs substantial rehabilitation, 1 floor.

Bldg. 4092
Fort Benning
Fort Benning Co: Muscogee GA 31905–
Landholding Agency: Army
Property Number: 219011709
Status: Unutilized
Comment: 336 sq. ft., most recent use—inflamable materials storage, needs substantial rehabilitation, 1 floor.

Bldg. 4089
Fort Benning
Fort Benning Co: Muscogee GA 31905–
Landholding Agency: Army
Property Number: 219011710
Status: Unutilized
Comment: 176 sq. ft., most recent use—gas station, needs substantial rehabilitation, 1 floor.

Bldg. 1235
Fort Benning Co: Muscogee GA 31905–
Landholding Agency: Army
Property Number: 219014887
Status: Unutilized
Comment: 9367 sq. ft., 1-story building, needs rehab., most recent use—general storehouse.

Bldg. 1236
Fort Benning Co: Muscogee GA 31905–
Landholding Agency: Army
Property Number: 219014888
Status: Unutilized
Comment: 9367 sq. ft., 1 story building; needs rehab; most recent use—General Storehouse.

Bldg. 1251
Fort Benning Co: Muscogee GA 31905–
Landholding Agency: Army
Property Number: 219014889
Status: Unutilized
Comment: 18385 sq. ft., 1 story building; needs rehab; most recent use—Arms Repair Shop.

Bldg. 4491
Fort Benning Co: Muscogee GA 31905–
Landholding Agency: Army
Property Number: 219014916
Status: Unutilized
Comment: 18240 sq. ft., 1 story building; needs rehab; most recent use—Vehicle maintenance shop.

Bldg. 4633
Fort Benning Co: Muscogee GA 31905–
Landholding Agency: Army
Property Number: 219014919
Status: Unutilized
Comment: 5069 sq. ft., 1 story building; needs rehab; most recent use—Training Building.

Bldg. 2150
Fort Benning Co: Muscogee GA 31905–
Landholding Agency: Army
Property Number: 219120258
Status: Unutilized
Comment: 3909 sq. ft., 1 story, needs rehab; most recent use—general inst. bldg.

Bldg. 2409
Fort Benning
Fort Benning Co: Muscogee GA 31905–
Landholding Agency: Army
Property Number: 219120263
Status: Unutilized
Comment: 9348 sq. ft., 1 story, needs rehab, most recent use—general purpose warehouse.

Bldg. 2590
Fort Benning
Fort Benning Co: Muscogee GA 31905–
Landholding Agency: Army
Property Number: 219120265
Status: Unutilized
Comment: 3132 sq. ft., 1 story, needs rehab, most recent use—vehicle maintenance shop.

Bldg. 3828
Fort Benning
Fort Benning Co: Muscogee GA 31905–
Landholding Agency: Army
Property Number: 219120266
Status: Unutilized
Comment: 628 sq. ft., 1 story, needs rehab, most recent use—general storehouse.

Bldg. 3086, Fort Benning
Fort Benning Co: Muscogee GA 31905–
Landholding Agency: Army
Property Number: 219220688
Status: Unutilized
Comment: 4720 sq. ft., 2 story, most recent use—barracks. Needs major rehab, off-site removal only.

Bldg. 3089, Fort Benning
Fort Benning Co: Muscogee GA 31905–
Landholding Agency: Army
Property Number: 219220689
Status: Unutilized
Comment: 4720 sq. ft., 2 story, most recent use—barracks. Needs major rehab, off-site removal only.

Bldg. 1252, Fort Benning
Ft. Benning Co: Muscogee GA 31905–
Landholding Agency: Army
Property Number: 219220694
Status: Unutilized
Comment: 583 sq. ft., 1 story, most recent use—storehouse, needs major rehab, off-site removal only.

Bldg. 1733, Fort Benning
Ft. Benning Co: Muscogee GA 31905–
Landholding Agency: Army
Property Number: 219220698
Status: Unutilized
Comment: 9375 sq. ft., 1 story, most recent use—storehouse, needs major rehab, off-site removal only.

Bldg. 3083, Fort Benning
Ft. Benning Co: Muscogee GA 31905–
Landholding Agency: Army
Property Number: 219220699
Status: Unutilized
Comment: 1372 sq. ft., 1 story, most recent use—storehouse, needs major rehab, off-site removal only.

Bldg. 3856, Fort Benning
Ft. Benning Co: Muscogee GA 31905–
Landholding Agency: Army
Property Number: 219220703
Status: Unutilized
Comment: 4111 sq. ft., 1 story, most recent use—storehouse, needs major rehab, off-site removal only.

Bldg. 4881, Fort Benning
Ft. Benning Co: Muscogee GA 31905–
Landholding Agency: Army
Property Number: 219220707
Status: Unutilized
Comment: 2449 sq. ft., 1 story, most recent use—storehouse, need repairs, off-site removal only.

Bldg. 4963, Fort Benning
Ft. Benning Co: Muscogee GA 31905–
Landholding Agency: Army
Property Number: 219220710
Status: Unutilized
Comment: 6077 sq. ft., 1 story, most recent use—storehouse, need repairs, off-site removal only.

Bldg. 2396, Fort Benning
Ft. Benning Co: Muscogee GA 31905–
Landholding Agency: Army
Property Number: 219220712
Status: Unutilized
Comment: 9786 sq. ft., 1 story, most recent use—dining facility, needs major rehab, off-site removal only.

Bldg. 3085, Fort Benning
Ft. Benning Co: Muscogee GA 31905–
Landholding Agency: Army
Property Number: 219220715
Status: Unutilized
Comment: 2253 sq. ft., 1 story, most recent use—dining facility, needs major rehab, off-site removal only.

Bldg. 4882, Fort Benning
Ft. Benning Co: Muscogee GA 31905–
Landholding Agency: Army
Property Number: 219220727
Status: Unutilized
Comment: 6077 sq. ft., 1 story, most recent use—storage, need repairs, off-site removal only.

Bldg. 4967, Fort Benning
Ft. Benning Co: Muscogee GA 31905–
Landholding Agency: Army
Property Number: 219220728
Status: Unutilized
Comment: 6077 sq. ft., 1 story, most recent use—storage, need repairs, off-site removal only.

Bldg. 5396, Fort Benning
Ft. Benning Co: Muscogee GA 31905–
Landholding Agency: Army
Property Number: 219220734
Status: Unutilized
Comment: 10944 sq. ft., 1 story, most recent use—general instruction bldg., needs major rehab, off-site removal only.

Bldg. 247, Fort Benning
Ft. Benning Co: Muscogee GA 31905–
Landholding Agency: Army
Property Number: 219220735
Status: Unutilized
Comment: 1144 sq. ft., 1 story, most recent use—offices, needs major rehab, off-site removal only.

Bldg. 4977, Fort Benning
Ft. Benning Co: Muscogee GA 31905–
Landholding Agency: Army
Property Number: 219220736
Status: Unutilized
Comment: 192 sq. ft., 1 story, most recent use—offices, need repairs, off-site removal only.

Bldg. 4978, Fort Benning
Ft. Benning Co: Muscogee GA 31905–
Landholding Agency: Army
Property Number: 219220737
Status: Unutilized
Comment: 192 sq. ft., 1 story, most recent use—offices, need repairs, off-site removal only.

Bldg. 4944, Fort Benning
Ft. Benning Co: Muscogee GA 31905–
Landholding Agency: Army
Property Number: 219220747
Status: Unutilized
Comment: 6400 sq. ft., 1 story, most recent use—vehicle maintenance shop, need repairs, off-site removal only.

Bldg. 4960, Fort Benning
Ft. Benning Co: Muscogee GA 31905–
Landholding Agency: Army
Property Number: 219220752
Status: Unutilized
Comment: 3335 sq. ft., 1 story, most recent use—vehicle maintenance shop, off-site removal only.

Bldg. 4969, Fort Benning
Ft. Benning Co: Muscogee GA 31905–
Landholding Agency: Army
Property Number: 219220753
Status: Unutilized
Comment: 8416 sq. ft., 1 story, most recent use—vehicle maintenance shop, off-site removal only.

Bldg. 1758, Fort Benning
Ft. Benning Co: Muscogee GA 31905–
Landholding Agency: Army
Property Number: 219220755
Status: Unutilized
Comment: 7817 sq. ft., 1 story, most recent use—warehouse, needs major rehab, off-site removal only.

Bldg. 3817, Fort Benning
Ft. Benning Co: Muscogee GA 31905–
Landholding Agency: Army
Property Number: 219220758
Status: Unutilized
Comment: 4000 sq. ft., 1 story, most recent use—warehouse, needs major repairs, off-site removal only.

Bldg. 4884, Fort Benning
Ft. Benning Co: Muscogee GA 31905–
Landholding Agency: Army
Property Number: 219220762
Status: Unutilized
Comment: 2000 sq. ft., 1 story, most recent use—headquarters bldg., needs repairs, off-site removal only.

Bldg. 4964, Fort Benning
Ft. Benning Co: Muscogee GA 31905–
Landholding Agency: Army
Property Number: 219220763
Status: Unutilized
Comment: 2000 sq. ft., 1 story, most recent use—headquarters bldg., need repairs, off-site removal only.

Bldg. 4966, Fort Benning
Ft. Benning Co: Muscogee GA 31905–
Landholding Agency: Army
Property Number: 219220764
Status: Unutilized
Comment: 2000 sq. ft., 1 story, most recent use—headquarters bldg., need repairs, off-site removal only.

Bldg. 4679, Fort Benning
Ft. Benning Co: Muscogee GA 31905–
Landholding Agency: Army
Property Number: 219220767
Status: Unutilized
Comment: 8657 sq. ft., 1 story, most recent use—supply bldg., needs major rehab, off-site removal only.

Bldg. 4883, Fort Benning
Ft. Benning Co: Muscogee GA 31905–
Landholding Agency: Army
Property Number: 219220768
Status: Unutilized
Comment: 2600 sq. ft., 1 story, most recent use—supply bldg., need repairs, off-site removal only.

Bldg. 4965, Fort Benning
Ft. Benning Co: Muscogee GA 31905–
Landholding Agency: Army
Property Number: 219220769
Status: Unutilized

Comment: 7713 sq. ft., 1 story, most recent use—supply bldg., need repairs, off-site removal only.

Bldg. 2513, Fort Benning
Ft. Benning Co: Muscogee GA 31905–
Landholding Agency: Army
Property Number: 219220770
Status: Unutilized
Comment: 9483 sq. ft., 1 story, most recent use—training center, needs major rehab, off-site removal only.

Bldg. 2526, Fort Benning
Ft. Benning Co: Muscogee GA 31905–
Landholding Agency: Army
Property Number: 219220771
Status: Unutilized
Comment: 11855 sq. ft., 1 story, most recent use—training center, needs major rehab, off-site removal only.

Bldg. 2589, Fort Benning
Ft. Benning Co: Muscogee GA 31905–
Landholding Agency: Army
Property Number: 219220772
Status: Unutilized
Comment: 146 sq. ft., 1 story, most recent use—training bldg., needs major rehab, off-site removal only.

Bldg. 4976, Fort Benning
Ft. Benning Co: Muscogee GA 31905–
Landholding Agency: Army
Property Number: 219220778
Status: Unutilized
Comment: 192 sq. ft., 1 story, most recent use—gas station, need repairs, off-site removal only.

Bldg. 4945, Fort Benning
Ft. Benning Co: Muscogee GA 31905–
Landholding Agency: Army
Property Number: 219220779
Status: Unutilized
Comment: 220 sq. ft., 1 story, most recent use—gas station, needs major rehab, off-site removal only.

Bldg. 4979, Fort Benning
Ft. Benning Co: Muscogee GA 31905–
Landholding Agency: Army
Property Number: 219220780
Status: Unutilized
Comment: 400 sq. ft., 1 story, most recent use—oil house, need repairs, off-site removal only.

Bldg. 4627, Fort Benning
Ft. Benning Co: Muscogee GA 31905–
Landholding Agency: Army
Property Number: 219220786
Status: Unutilized
Comment: 1676 sq. ft., 1 story, most recent use—sentry station, needs major rehab, off-site removal only.

Bldg. 4114, Fort Benning
Ft. Benning Co: Muscogee GA 31905–
Landholding Agency: Army
Property Number: 219310407
Status: Unutilized
Comment: 4425 sq. ft., 2-story, needs rehab, most recent use—barracks, off-site use only.

Bldg. 4117, Fort Benning
Ft. Benning Co: Muscogee GA 31905–
Landholding Agency: Army
Property Number: 219310408
Status: Unutilized
Comment: 4425 sq. ft., 2-story, needs rehab, most recent use—barracks, off-site use only.

Bldg. 4118, Fort Benning
Ft. Benning Co: Muscogee GA 31905–
Landholding Agency: Army
Property Number: 219310409
Status: Unutilized
Comment: 4425 sq. ft., 2-story, needs rehab, most recent use—barracks, off-site use only.

Bldg. 4125, Fort Benning
Ft. Benning Co: Muscogee GA 31905–
Landholding Agency: Army
Property Number: 219310410
Status: Unutilized
Comment: 4425 sq. ft., 2-story, needs rehab, most recent use—barracks, off-site use only.

Bldg. 4126, Fort Benning
Ft. Benning Co: Muscogee GA 31905–
Landholding Agency: Army
Property Number: 219310411
Status: Unutilized
Comment: 4425 sq. ft., 2-story, needs rehab, most recent use—barracks, off-site use only.

Bldg. 4129, Fort Benning
Ft. Benning Co: Muscogee GA 31905–
Landholding Agency: Army
Property Number: 219310412
Status: Unutilized
Comment: 4425 sq. ft., 2-story, needs rehab, most recent use—barracks, off-site use only.

Bldg. 4130, Fort Benning
Ft. Benning Co: Muscogee GA 31905–
Landholding Agency: Army
Property Number: 219310413
Status: Unutilized
Comment: 4425 sq. ft., 2-story, needs rehab, most recent use—barracks, off-site use only.

Bldg. 4137, Fort Benning
Ft. Benning Co: Muscogee GA 31905–
Landholding Agency: Army
Property Number: 219310414
Status: Unutilized
Comment: 4425 sq. ft., 2-story, needs rehab, most recent use—barracks, off-site use only.

Bldg. 4138, Fort Benning
Ft. Benning Co: Muscogee GA 31905–
Landholding Agency: Army
Property Number: 219310415
Status: Unutilized
Comment: 4425 sq. ft., 2-story, needs rehab, most recent use—barracks, off-site use only.

Bldg. 4140, Fort Benning
Ft. Benning Co: Muscogee GA 31905–
Landholding Agency: Army
Property Number: 219310416
Status: Unutilized
Comment: 4425 sq. ft., 2-story, needs rehab, most recent use—barracks, off-site use only.

Bldg. 4004, Fort Benning
Ft. Benning Co: Muscogee GA 31905–
Landholding Agency: Army
Property Number: 219310418
Status: Unutilized
Comment: 4720 sq. ft., 2-story, needs rehab, most recent use—barracks, off-site use only.

Bldg. 4106, Fort Benning
Ft. Benning Co: Muscogee GA 31905–
Landholding Agency: Army
Property Number: 219310425
Status: Unutilized
Comment: 4720 sq. ft., 2-story, needs rehab, most recent use—barracks, off-site use only.

Bldg. 4115, Fort Benning
Ft. Benning Co: Muscogee GA 31905–
Landholding Agency: Army
Property Number: 219310426
Status: Unutilized
Comment: 4720 sq. ft., 2-story, needs rehab, most recent use—barracks, off-site use only.

Bldg. 4116, Fort Benning
Ft. Benning Co: Muscogee GA 31905–
Landholding Agency: Army
Property Number: 219310427
Status: Unutilized
Comment: 4720 sq. ft., 2-story, needs rehab, most recent use—barracks, off-site use only.

Bldg. 4127, Fort Benning
Ft. Benning Co: Muscogee GA 31905–
Landholding Agency: Army
Property Number: 219310428
Status: Unutilized
Comment: 4720 sq. ft., 2-story, needs rehab, most recent use—barracks, off-site use only.

Bldg. 4128, Fort Benning
Ft. Benning Co: Muscogee GA 31905–
Landholding Agency: Army
Property Number: 219310429
Status: Unutilized
Comment: 4720 sq. ft., 2-story, needs rehab, most recent use—barracks, off-site use only.

Bldg. 4139, Fort Benning
Ft. Benning Co: Muscogee GA 31905–
Landholding Agency: Army
Property Number: 219310430
Status: Unutilized
Comment: 4720 sq. ft., 2-story, needs rehab, most recent use—barracks, off-site use only.

Bldg. 4149, Fort Benning
Ft. Benning Co: Muscogee GA 31905–
Landholding Agency: Army
Property Number: 219310431
Status: Unutilized
Comment: 4720 sq. ft., 2-story, needs rehab, most recent use—barracks, off-site use only.

Bldg. 4150, Fort Benning
Ft. Benning Co: Muscogee GA 31905–
Landholding Agency: Army
Property Number: 219310432
Status: Unutilized
Comment: 4720 sq. ft., 2-story, needs rehab, most recent use—barracks, off-site use only.

Bldg. 4112, Fort Benning
Ft. Benning Co: Muscogee GA 31905–
Landholding Agency: Army
Property Number: 219310436
Status: Unutilized
Comment: 1144 sq. ft., 1-story, needs rehab, most recent use—day room, off-site use only.

Bldg. 4119, Fort Benning
Ft. Benning Co: Muscogee GA 31905–
Landholding Agency: Army
Property Number: 219310437

Status: Unutilized
Comment: 1144 sq. ft., 1-story, needs rehab, most recent use—day room, off-site use only.

Bldg. 4124, Fort Benning
Ft. Benning Co: Muscogee GA 31905–
Landholding Agency: Army
Property Number: 219310438
Status: Unutilized
Comment: 1144 sq. ft., 1-story, needs rehab, most recent use—day room, off-site use only.

Bldg. 4141, Fort Benning
Ft. Benning Co: Muscogee GA 31905–
Landholding Agency: Army
Property Number: 219310439
Status: Unutilized
Comment: 1144 sq. ft., 1-story, needs rehab, most recent use—day room, off-site use only.

Bldg. 4136, Fort Benning
Ft. Benning Co: Muscogee GA 31905–
Landholding Agency: Army
Property Number: 219310440
Status: Unutilized
Comment: 1144 sq. ft., 1-story, needs rehab, most recent use—day room, off-site use only.

Bldg. 4131, Fort Benning
Ft. Benning Co: Muscogee GA 31905–
Landholding Agency: Army
Property Number: 219310441
Status: Unutilized
Comment: 1144 sq. ft., 1-story, needs rehab, most recent use—day room, off-site use only.

Bldg. 4108, Fort Benning
Ft. Benning Co: Muscogee GA 31905–
Landholding Agency: Army
Property Number: 219310442
Status: Unutilized
Comment: 1171 sq. ft., 1-story, needs rehab, most recent use—day room, off-site use only.

Bldg. 1835, Fort Benning
Ft. Benning Co: Muscogee GA 31905–
Landholding Agency: Army
Property Number: 219310443
Status: Unutilized
Comment: 1712 sq. ft., 1-story, needs rehab, most recent use—day room, off-site use only.

Bldg. 4107, Fort Benning
Ft. Benning Co: Muscogee GA 31905–
Landholding Agency: Army
Property Number: 219310446
Status: Unutilized
Comment: 4720 sq. ft., 2-story, needs rehab, most recent use—day room, off-site use only.

Bldg. 3072, Fort Benning
Ft. Benning Co: Muscogee GA 31905–
Landholding Agency: Army
Property Number: 219310447
Status: Unutilized
Comment: 479 sq. ft., 1-story, needs rehab, most recent use—hdqtrs. bldg., off-site use only.

Bldg. 4103, Fort Benning
Ft. Benning Co: Muscogee GA 31905–
Landholding Agency: Army
Property Number: 219310449
Status: Unutilized
Comment: 1635 sq. ft., 1-story, needs rehab, most recent use—hdqtrs bldg., off-site use only.

Bldg. 4019, Fort Benning
Ft. Benning Co: Muscogee GA 31905–
Landholding Agency: Army
Property Number: 219310451
Status: Unutilized
Comment: 3270 sq. ft., 2-story, needs rehab, most recent use—hdqtrs bldg., off-site use only.

Bldg. 4109, Fort Benning
Ft. Benning Co: Muscogee GA 31905–
Landholding Agency: Army
Property Number: 219310455
Status: Unutilized
Comment: 2253 sq. ft., 1-story, needs rehab, most recent use—dining facility, off-site use only.

Bldg. 4135, Fort Benning
Ft. Benning Co: Muscogee GA 31905–
Landholding Agency: Army
Property Number: 219310458
Status: Unutilized
Comment: 3755 sq. ft., 1-story, needs rehab, most recent use—dining facility, off-site use only.

Bldg. 4123, Fort Benning
Ft. Benning Co: Muscogee GA 31905–
Landholding Agency: Army
Property Number: 219310459
Status: Unutilized
Comment: 3755 sq. ft., 1-story, needs rehab, most recent use—dining facility, off-site use only.

Bldg. 4111, Fort Benning
Ft. Benning Co: Muscogee GA 31905–
Landholding Agency: Army
Property Number: 219310460
Status: Unutilized
Comment: 3755 sq. ft., 1-story, needs rehab, most recent use—dining facility, off-site use only.

Bldg. 4023, Fort Benning
Ft. Benning Co: Muscogee GA 31905–
Landholding Agency: Army
Property Number: 219310461
Status: Unutilized
Comment: 2269 sq. ft., 1-story, needs rehab, most recent use—maintenance shop, off-site use only.

Bldg. 4024, Fort Benning
Ft. Benning Co: Muscogee GA 31905–
Landholding Agency: Army
Property Number: 219310462
Status: Unutilized
Comment: 3281 sq. ft., 1-story, needs rehab, most recent use—maintenance shop, off-site use only.

Bldg. 4067, Fort Benning
Ft. Benning Co: Muscogee GA 31905–
Landholding Agency: Army
Property Number: 219310465
Status: Unutilized
Comment: 4406 sq. ft., 1-story, needs rehab, most recent use—admin., off-site use only.

Bldg. 4025, Fort Benning
Ft. Benning Co: Muscogee GA 31905–
Landholding Agency: Army
Property Number: 219310466
Status: Unutilized
Comment: 4720 sq. ft., 2-story, needs rehab, most recent use—admin., off-site use only.

Bldg. 4110, Fort Benning
Ft. Benning Co: Muscogee GA 31905–
Landholding Agency: Army
Property Number: 219310467
Status: Unutilized
Comment: 1017 sq. ft., 1-story, needs rehab, most recent use—storehouse, off-site use only.

Bldg. 4122, Fort Benning
Ft. Benning Co: Muscogee GA 31905–
Landholding Agency: Army
Property Number: 219310468
Status: Unutilized
Comment: 1017 sq. ft., 1-story, needs rehab, most recent use—storehouse, off-site use only.

Bldg. 4134, Fort Benning
Ft. Benning Co: Muscogee GA 31905–
Landholding Agency: Army
Property Number: 219310469
Status: Unutilized
Comment: 1017 sq. ft., 1-story, needs rehab, most recent use—storehouse, off-site use only.

Bldg. 4113, Fort Benning
Ft. Benning Co: Muscogee GA 31905–
Landholding Agency: Army
Property Number: 219310473
Status: Unutilized
Comment: 4425 sq. ft., 2-story, needs rehab, most recent use—storage, off-site use only.

Bldg. 10847, Fort Benning
Ft. Benning Co: Muscogee GA 31905–
Landholding Agency: Army
Property Number: 219310476
Status: Unutilized
Comment: 1056 sq. ft., 1-story, needs rehab, most recent use—scout bldg., off-site use only.

Bldg. 10768, Fort Benning
Ft. Benning Co: Muscogee GA 31905–
Landholding Agency: Army
Property Number: 219310477
Status: Unutilized
Comment: 1230 sq. ft., 1-story, needs rehab, most recent use—scout bldg., off-site use only.

Bldg. 2683, Fort Benning
Ft. Benning Co: Muscogee GA 31905–
Landholding Agency: Army
Property Number: 219310478
Status: Unutilized
Comment: 816 sq. ft., 1-story, needs rehab, most recent use—scout bldg., off-site use only.

Bldg. 4121, Fort Benning
Ft. Benning Co: Muscogee GA 31905–
Landholding Agency: Army
Property Number: 219310487
Status: Unutilized
Comment: 1017 sq. ft., 1-story, needs rehab, most recent use—arms bldg., off-site use only.

Bldg. 4133, Fort Benning
Ft. Benning Co: Muscogee GA 31905–
Landholding Agency: Army
Property Number: 219310488
Status: Unutilized
Comment: 1017 sq. ft., 1-story, needs rehab, most recent use—arms bldg., off-site use only.

Bldg. 4143, Fort Benning
Ft. Benning Co: Muscogee GA 31905–
Landholding Agency: Army
Property Number: 219310489

Status: Unutilized
Comment: 1017 sq. ft., 1-story, needs rehab, most recent use—arms bldg., off-site use only.

Bldg. 4105, Fort Benning
Ft. Benning Co: Muscogee GA 31905–
Landholding Agency: Army
Property Number: 219310490
Status: Unutilized
Comment: 1416 sq. ft., 1-story needs rehab, most recent use—arms bldg., off-site use only.

Bldg. 26306
Fort Gordon
Ft. Gordon Co: Richmond GA 30905–
Landholding Agency: Army
Property Number: 219320225
Status: Unutilized
Comment: 1272 sq. ft., 1-story wood frame, possible asbestos, needs repairs, off-site use only, most recent use—storage.

Bldg. 354, Fort Gordon
Ft. Gordon Co: Richmond GA 30905–
Landholding Agency: Army
Property Number: 219330259
Status: Unutilized
Comment: 4237 sq. ft., 1-story wood, possible termite damage, needs repair, presence of asbestos, most recent use—offices, off-site use only.

Bldg. 355, Fort Gordon
Ft. Gordon Co: Richmond GA 30905–
Landholding Agency: Army
Property Number: 219330260
Status: Unutilized
Comment: 4237 sq. ft., 1-story wood, needs repairs, presence of asbestos, most recent use—offices, off-site use only.

Bldg. 356, Fort Gordon
Ft. Gordon Co: Richmond GA 30905–
Landholding Agency: Army
Property Number: 219330261
Status: Unutilized
Comment: 4237 sq. ft., 1-story wood, possible termite damage, needs repairs, most recent use—offices, off-site use only.

Bldg. 377, Fort Gordon
Ft. Gordon Co: Richmond GA 30905–
Landholding Agency: Army
Property Number: 219330263
Status: Unutilized
Comment: 4768 sq. ft., 1-story wood, needs repairs, presence of asbestos, most recent use—offices, off-site use only.

Bldg. 19601, Fort Gordon
Ft. Gordon Co: Richmond GA 30905–
Landholding Agency: Army
Property Number: 219330268
Status: Unutilized
Comment: 2132 sq. ft., 1-story wood, possible termite damage, presence of asbestos, most recent use—offices, off-site use only.

Bldg. 19602, Fort Gordon
Ft. Gordon Co: Richmond GA 30905–
Landholding Agency: Army
Property Number: 219330269
Status: Unutilized
Comment: 1555 sq. ft., 1-story wood, presence of asbestos, most recent use—offices, off-site use only.

Bldg. 35503, Fort Gordon
Ft. Gordon Co: Richmond GA 30905–
Landholding Agency: Army
Property Number: 219330277
Status: Unutilized
Comment: 2500 sq. ft., 1-story wood, needs rehab, most recent use—offices, off-site use only.

Bldg. 332, Fort Gordon
Ft. Gordon Co: Richmond GA 30905–
Landholding Agency: Army
Property Number: 219330289
Status: Unutilized
Comment: 5340 sq. ft., 1-story wood, needs repair, presence of asbestos, most recent use—laboratory, off-site use only.

Bldg. 333, Fort Gordon
Ft. Gordon Co: Richmond GA 30905–
Landholding Agency: Army
Property Number: 219330290
Status: Unutilized
Comment: 5340 sq. ft., 1-story wood, possible termite damage, needs repair, presence of asbestos, most recent use—laboratory, off-site use only.

Bldg. 334, Fort Gordon
Ft. Gordon Co: Richmond GA 30905–
Landholding Agency: Army
Property Number: 219330291
Status: Unutilized
Comment: 4279 sq. ft., 1-story wood, possible termite damage, presence of asbestos, most recent use—medical admin., off-site use only.

Bldg. 335, Fort Gordon
Ft. Gordon Co: Richmond GA 30905–
Landholding Agency: Army
Property Number: 219330292
Status: Unutilized
Comment: 4300 sq. ft., 1-story wood, possible termite damage, needs repair, presence of asbestos, most recent use—laboratory, off-site use only.

Bldg. 353, Fort Gordon
Ft. Gordon Co: Richmond GA 30905–
Landholding Agency: Army
Property Number: 219330293
Status: Unutilized
Comment: 5157 sq. ft., 1-story wood, presence of asbestos, most recent use—laboratory, off-site use only.

Bldg. 352, Fort Gordon
Ft. Gordon Co: Richmond GA 30905–
Landholding Agency: Army
Property Number: 219330294
Status: Unutilized
Comment: 560 sq. ft., 1-story metal, presence of asbestos, most recent use—equip. storage, off-site use only.

Bldg. 10501
Fort Gordon
Fort Gordon Co: Richmond GA 30905–
Landholding Agency: Army
Property Number: 219410264
Status: Unutilized
Comment: 2516 sq. ft., 1-story, wood, needs rehab., most recent use—office, off-site use only.

Bldg. 10601
Fort Gordon
Fort Gordon Co.: Richmond GA 30905–
Landholding Agency: Army
Property Number: 219410265
Status: Unutilized
Comment: 1334 sq. ft., 1-story, wood, most recent use—office, off-site use only.

Bldg. 20303
Fort Gordon
Fort Gordon Co: Richmond GA 30905–
Landholding Agency: Army
Property Number: 219410266
Status: Unutilized
Comment: 2376 sq. ft., 1 story, wood, needs rehab., most recent use—office, off-site use only.

Bldg. 11813
Fort Gordon
Fort Gordon Co: Richmond GA 30905–
Landholding Agency: Army
Property Number: 219410269
Status: Unutilized
Comment: 70 sq. ft., 1-story, metal, needs rehab., most recent use—storage, off-site use only.

Bldg. 21314
Fort Gordon
Fort Gordon Co: Richmond GA 30905–
Landholding Agency: Army
Property Number: 219410270
Status: Unutilized
Comment: 85 sq. ft., 1-story, needs rehab., most recent use—storage, off-site use only.

Bldg. 951
Fort Gordon
Fort Gordon Co: Richmond GA 30905–
Landholding Agency: Army
Property Number: 219410271
Status: Unutilized
Comment: 17,825 sq. ft., 1-story, wood, needs rehab., most recent use—workshop, off-site use only.

Bldg. 12809
Fort Gordon
Fort Gordon Co: Richmond GA 30905–
Landholding Agency: Army
Property Number: 219410272
Status: Unutilized
Comment: 2788 sq. ft., 1-story, wood, needs rehab., most recent use—maintenance shop, off-site use only.

Bldg. 10306
Fort Gordon
Fort Gordon Co: Richmond GA 30905–
Landholding Agency: Army
Property Number: 219410273
Status: Unutilized
Comment: 195 sq. ft., 1-story, wood, most recent use—oil storage shed, off-site use only.

Bldg. P–8582
Hunter Army Airfield
Savannah Co: Chatham GA 31409–
Landholding Agency: Army
Property Number: 219420355
Status: Unutilized
Comment: 5892 sq. ft., 2-story, steel, needs major repairs, most recent use—radar tower, off-site use only.

Bldg. T–305, Fort Stewart
Hinesville Co: Liberty Ga 31314–
Landholding Agency: Army
Property Number: 219510103
Status: Excess
Comment: 2340 sq. ft., 1-story, most recent use—hosp. clinic, needs rehab, off-site use only.

Bldg. T–1414
Hunter Army Airfield
Savannah Co: Chatham GA 31409–
Landholding Agency: Army
Property Number: 219510106
Status: Excess

Comment: 2000 sq. ft., 1-story, most recent use—office, needs rehab, off-site use only.

Bldg. 2813, Ft. Benning
Ft. Benning Co: Muscogee GA 31905–
Landholding Agency: Army
Property Number: 219520074
Status: Unutilized
Comment: 40536 sq. ft., 4-story, most recent use—admin., needs major repair, off-site use only.

Bldg. 401
Hunter Army Airfield
Savannah Co: Chatham GA 31409–
Landholding Agency: Army
Property Number: 219520076
Status: Unutilized
Comment: 5167 sq. ft., 1-story, needs major repair, most recent use—office, off-site use only.

Bldg. T–901
Hunter Army Airfield
Savannah Co: Chatham GA 31409–
Landholding Agency: Army
Property Number: 219520077
Status: Unutilized
Comment: 1828 sq. ft., 1-story, needs major repair, most recent use—admin., off-site use only.

Bldg. T–902
Hunter Army Airfield
Savannah Co: Chatham GA 31409–
Landholding Agency: Army
Property Number: 219520078
Status: Unutilized
Comment: 1828 sq. ft., 1-story, needs major repair, most recent use—admin., off-site use only.

Bldg. 51202, Fort Gordon
Ft. Gordon Co: Richmond GA 30905–
Landholding Agency: Army
Property Number: 219520080
Status: Unutilized
Comment: 1555 sq. ft., 1-story, needs repair, presence of lead paint, most recent use—office, off-site use only.

Bldgs. 61401 and 91501
Fort Gordon
Ft. Gordon Co: Richmond GA 30905–
Landholding Agency: Army
Property Number: 219520132
Status: Unutilized
Comment: 7036 sq. ft. each, 2-story, needs rehab, presence of asbestos & lead base paint, most recent use—barracks, off-site use only.

Bldg. 2814, Fort Benning
Ft. Benning Co: Muscogee GA 31905–
Landholding Agency: Army
Property Number: 219520133
Status: Unutilized
Comment: 40536 sq. ft., 4-story, most recent use—barracks w/dining, needs major repair, off-site use only.

Bldg. 90, Fort Benning
Ft. Benning Co: Muscogee GA 31905–
Landholding Agency: Army
Property Number: 219520165
Status: Unutilized
Comment: 25065 sq. ft., 1-story, needs rehab, most recent use—theater, off-site use only.

Bldg. 227, Fort Benning
Ft. Benning Co: Muscogee GA 31905–
Landholding Agency: Army
Property Number: 219520166
Status: Unutilized
Comment: 14019 sq. ft., 2-story, needs rehab, most recent use—NCO club, off-site use only.

Bldg. 1755, Fort Benning
Ft. Benning Co: Muscogee GA 31905–
Landholding Agency: Army
Property Number: 219520170
Status: Unutilized
Comment: 3142 sq. ft., needs rehab, most recent use—maint. shop, off-site use only.

Bldg. 3802, Fort Benning
Ft. Benning Co: Muscogee GA 31905–
Landholding Agency: Army
Property Number: 219520173
Status: Unutilized
Comment: 3362 sq. ft., 1-story, needs rehab, most recent use—chapel, off-site use only.

Bldg. 4051, Fort Benning
Ft. Benning Co: Muscogee GA 31905–
Landholding Agency: Army
Property Number: 219520175
Status: Unutilized
Comment: 967 sq. ft., 1-story, needs rehab, most recent use—storage, off-site use only.

Bldg. A1618, Fort Gordon
Ft. Gordon Co: Richmond GA 30905–
Landholding Agency: Army
Property Number: 219520184
Status: Unutilized
Comment: 2800 sq. ft., 1-story, needs rehab, most recent use—storage, presence of asbestos & lead base paint, off-site use only.

Bldg. 61404, Fort Gordon
Ft. Gordon Co: Richmond GA 30905–
Landholding Agency: Army
Property Number: 219520185
Status: Unutilized
Comment: 3428 sq. ft., 1-story, most recent use—maint. shop, needs rehab, presence of asbestos & lead base paint, off-site use only.

Bldg. T–959
Fort Stewart
Hinesville Co: Liberty GA 31314–
Landholding Agency: Army
Property Number: 219610646
Status: Unutilized
Comment: 3108 ft., needs rehab, most recent use—motor pool, off-site use only.

Bldg. T–1119
Fort Stewart
Hinesville Co: Liberty GA 31314–
Landholding Agency: Army
Property Number: 219610647
Status: Unutilized
Comment: 94 sq. ft., poor condition, most recent use—storage, off-site use only.

Bldg. P–4583
Fort Stewart
Hinesville Co: Liberty GA 31314–
Landholding Agency: Army
Property Number: 219610648
Status: Unutilized
Comment: 40 sq ft., most recent use—fuel bldg., off-site use only.

Bldg. B1201
Fort Gordon
Ft. Gordon Co: Richmond GA 30905–
Landholding Agency: Army
Property Number: 219610649
Status: Unutilized
Comment: 980 sq. ft., needs repair, most recent use—office, off-site use only.

Bldg. 2141
Fort Gordon
Ft. Gordon Co: Richmond GA 30905–
Landholding Agency: Army
Property Number: 219610655
Status: Unutilized
Comment: 2283 sq. ft., needs repair, most recent use—office, off-site use only.

Bldg. T–8224
Hunter Army Airfield
Savannah Co: Chatham GA 31409–
Landholding Agency: Army
Property Number: 219610661
Status: Unutilized
Comment: 25 sq. ft., sentry station, needs repair, off-site use only.

Bldg. 34300
Fort Gordon
Ft. Gordon Co: Richmond GA 30905–
Landholding Agency: Army
Property Number: 219620664
Status: Unutilized
Comment: 2525 sq. ft., most recent use—auto svc store, possible asbestos, off-site use only.

Hawaii

P–88
Aliamanu Military Reservation
Honolulu Co: Honolulu HI 96818–
Location: Approximately 600 feet from Main Gate on Aliamanu Drive.
Landholding Agency: Army
Property Number: 219030324
Status: Unutilized
Comment: 45,216 sq. ft. underground tunnel complex, pres. of asbestos clean-up required of contamination, use of respirator required by those entering property, use limitations.

Bldg. S–823
Wheeler Army Airfield
Wahiawa HI 96786–
Landholding Agency: Army
Property Number: 219520082
Status: Unutilized
Comment: 3150 sq. ft., 2-story wood frame, most recent use—office, off-site use only.

Bldg. P–125
Tripler Army Medical Center
Honolulu Co: Honolulu HI 96859–5000
Landholding Agency: Army
Property Number: 219540013
Status: Excess
Comment: 7987 sq. ft., need major repairs, most recent use—boiler plant, off-site use only.

Bldg. T–1191
Schofield Barracks
Wahiawa HI 96786–
Landholding Agency: Army
Property Number: 219610663
Status: Unutilized
Comment: 7186 gross sq. ft., termite damage, most recent use—range support, off-site use only.

Bldg. T–255A
Schofield Barracks
Wahiawa HI 96786–
Landholding Agency: Army
Property Number: 219610664
Status: Unutilized
Comment: 943 gross sq. ft., most recent use—boy scout hut, off-site use only.

Bldg. P–A3025

Schofield Barracks
Wahiawa HI 96786–
Landholding Agency: Army
Property Number: 219610665
Status: Unutilized
Comment: 1093 gross sq. ft., termite damage, most recent use—storage, off-site use only.

Bldg. P–31
Mauna Kapu Communications Station Site
Makakilo Co: Ewa HI 96706–
Landholding Agency: Army
Property Number: 219610666
Status: Unutilized
Comment: 214 gross sq. ft., most recent use—generator bldg., off-site use only.

Bldg. S–571
Wheeler Army Airfield
Wahiawa HI 96786–
Landholding Agency: Army
Property Number: 219620654
Status: Unutilized
Comment: 10,053 sq. ft., most recent use—classroom, off-site use only.

Bldg. S–120
Wheeler Army Airfield
Wahiawa HI 96786–
Landholding Agency: Army
Property Number: 219620655
Status: Unutilized
Comment: 2750 sq. ft., most recent use—admin., off-site use only.

Bldg. S–570
Wheeler Army Airfield
Wahiawa HI 96786–
Landholding Agency: Army
Property Number: 219620656
Status: Unutilized
Comment: 60 sq. ft., most recent use—ticket booth, off-site use only.

Bldg. T–723
Fort Shafter
Honolulu HI 96819–
Landholding Agency: Army
Property Number: 219620657
Status: Unutilized
Comment: 1751 sq. ft., most recent use—store house, off-site use only.

Bldg. T–1629
Schofield Barracks
Wahiawa HI 96786–
Landholding Agency: Army
Property Number: 219620658
Status: Unutilized
Comment: 3287 sq. ft., most recent use—storage, possible termite infestation, off-site use only.

Bldg. T–489
Schofield Barracks
Wahiawa HI 96786–
Landholding Agency: Army
Property Number: 219620659
Status: Unutilized
Comment: 6120 sq. ft., most recent use—storage, needs repair, off-site use only.

Bldg. T–310
Fort Shafter
Honolulu HI 96819–
Landholding Agency: Army
Property Number: 219620660
Status: Unutilized
Comment: 400 sq. ft., most recent use—storage, off-site use only.

Illinois

WARD Army Reserve Center
1429 Northmoor Road
Peoria Co: Peoria IL 61614–3498
Landholding Agency: Army
Property Number: 219430254
Status: Unutilized
Comment: 2 bldgs. on 3.15 acres, 36451 sq. ft., reserve center & warehouse, presence of asbestos, most recent use—office/storage/training.

Stenafich Army Reserve Center
1600 E. Willow Road
Kankakee Co: Kankakee IL 60901–2631
Landholding Agency: Army
Property Number: 219430255
Status: Unutilized
Comment: 2 bldgs.—reserve center & vehicle maint. shop on 3.68 acres, 5641 sq. ft., most recent use—office/storage/training, presence of asbestos.

Bldg. 54
Rock Island Arsenal
Rock Island Co: Rock Island IL 61299–
Landholding Agency: Army
Property Number: 219620666
Status: Unutilized
Comment: 2000 sq. ft., most recent use—oil storage, needs repair, off-site use only.

Indiana

Bldgs. 7215, 7216
Indiana Army Ammunition Plant
Charlestown Co: Clark IN 47111–
Landholding Agency: Army
Property Number: 219330297
Status: Unutilized
Comment: roadside shelters, no utilities, located on Indiana State Highway Right of Way.

Bldg. 41, USARC Brann
Rushville Co: Rush IN 46173–
Landholding Agency: Army
Property Number: 219610667
Status: Unutilized
Comment: 10820 sq. ft., presence of asbestos, most recent use—office/storage/training.

Bldg. 42, USARC Brann
Rushville Co: Rush IN 46173–
Landholding Agency: Army
Property Number: 219610668
Status: Unutilized
Comment: 2464 sq. ft., presence of asbestos, most recent use—vehicle maintenance shop.

Bldg. 27, USARC Paulsen
North Judson Co: Starke IN 46366–
Landholding Agency: Army
Property Number: 219610669
Status: Unutilized
Comment: 10379 sq. ft., presence of asbestos, most recent use—office/storage/training.

Bldg. 36, USARC Paulsen
North Judson Co: Starke IN 46366–
Landholding Agency: Army
Property Number: 219610670
Status: Unutilized
Comment: 1802 sq. ft., presence of asbestos, most recent use—vehicle maintenance.

Iowa

U.S. Army Reserve Center
705 E. Taylor Street
Creston Co: Adams IA 50801–4040
Landholding Agency: Army
Property Number: 219430253
Status: Unutilized
Comment: 6500 sq. ft., 1-story structure on 2 acres, most recent use—office/storage/training.

Kansas

Bldg. T–2549, Fort Riley
Ft. Riley Co: Geary KS 66442–
Landholding Agency: Army
Property Number: 219310251
Status: Unutilized
Comment: 3082 sq. ft., 1-story wood frame, needs rehab, presence of asbestos, most recent use—storage.

Bldg. 166, Fort Riley
Ft. Riley Co: Geary KS 66442–
Landholding Agency: Army
Property Number: 219410325
Status: Unutilized
Comment: 3803 sq. ft., 3-story brick residence, needs rehab, presence of asbestos, located within National Registered Historic District.

Bldg. 184, Fort Riley
Ft. Riley KS 66442–
Landholding Agency: Army
Property Number: 219430146
Status: Unutilized
Comment: 1959 sq. ft., 1-story, needs rehab, presence of asbestos, most recent use—boiler plant, historic district.

Bldg. 1461
Fort Leavenworth
Ft. Leavenworth Co: Leavenworth KS 66027–
Landholding Agency: Army
Property Number: 219440424
Status: Unutilized
Comment: 1075 sq. ft., 1-story wood frame, asbestos cement shingles, most recent use—office, off-site use only.

Bldgs. T–2018, T–2120, T–2338
Fort Riley
Ft. Riley KS 66442–
Landholding Agency: Army
Property Number: 219510099
Status: Unutilized
Comment: 3059–3278 sq. ft., 1-2 story, needs rehab, presence of asbestos, most recent use—office/storage.

Bldgs. S–403, S–401
Fort Leavenworth
Leavenworth KS 66027–
Landholding Agency: Army
Property Number: 219510100
Status: Excess
Comment: 2978 sq. ft., 1-story, presence of asbestos, most recent use—hosp. clinic, off-site use only.

Bldg. P–157
Fort Leavenworth
Leavenworth Co: Leavenworth KS 66027–
Landholding Agency: Army
Property Number: 219610677
Status: Unutilized
Comment: 2070 sq. ft., needs rehab, most recent use—storage, off-site use only.

Bldg. P–1042
Fort Leavenworth
Leavenworth KS 66027–
Landholding Agency: Army
Property Number: 219610678
Status: Unutilized
Comment: 3 floors, needs repair, presence of lead paint, most recent use—maintenance shop, off-site use only.

Bldg. P–313, Fort Riley

Ft. Riley KS 66442–
Landholding Agency: Army
Property Number: 219610668
Status: Unutilized
Comment: 6222 sq. ft., most recent use—admin. bldg., needs repair, possible asbestos.

Kentucky

Bldg. 2541
Fort Campbell
Ft. Campbell Co: Christian KY 42223–
Landholding Agency: Army
Property Number: 219610679
Status: Unutilized
Comment: 1850 sq. ft., needs repair, possible asbestos, most recent use—admin., off-site use only.

Bldg. 2556
Fort Campbell
Ft. Campbell Co: Christian KY 42223–
Landholding Agency: Army
Property Number: 219610680
Status: Unutilized
Comment: 5400 sq. ft., possible asbestos, most recent use—admin., off-site use only.

Bldg. 2634
Fort Campbell
Ft. Campbell Co: Christian KY 42223–
Landholding Agency: Army
Property Number: 219610681
Status: Unutilized
Comment: 5310 sq. ft., possible asbestos, most recent use—admin., off-site use only.

Bldg. 2636
Fort Campbell
Ft. Campbell Co: Christian KY 42223–
Landholding Agency: Army
Property Number: 219610682
Status: Unutilized
Comment: 5310 sq. ft., possible asbestos, most recent use—admin., off-site use only.

Bldg. 2711
Fort Campbell
Ft. Campbell Co: Christian KY 42223–
Landholding Agency: Army
Property Number: 219610683
Status: Unutilized
Comment: 5310 sq. ft., needs rehab, presence of asbestos, most recent use—barracks, off-site use only.

Bldg. 2713
Fort Campbell
Ft. Campbell Co: Christian KY 42223–
Landholding Agency: Army
Property Number: 219610684
Status: Unutilized
Comment: 5310 sq. ft., needs rehab, presence of asbestos, most recent use—barracks, off-site use only.

Bldg. 2742
Fort Campbell
Ft. Campbell Co: Christian KY 42223–
Landholding Agency: Army
Property Number: 219610685
Status: Unutilized
Comment: 5310 sq. ft., needs rehab, presence of asbestos, most recent use—barracks, off-site use only.

Bldg. 2521
Fort Campbell
Ft. Campbell Co: Christian KY 42223–
Landholding Agency: Army
Property Number: 219610686
Status: Unutilized
Comment: 5310 sq. ft., needs rehab, presence of asbestos, most recent use—storage, off-site use only.

Bldg. 6550
Fort Campbell
Ft. Campbell Co: Christian KY 42223–
Landholding Agency: Army
Property Number: 219610687
Status: Unutilized
Comment: 25701 sq. ft., needs rehab, presence of asbestos, most recent use—storage, off-site use only.

Bldgs. 2306, 2307
Fort Campbell
Ft. Campbell Co: Christian KY 42223–
Landholding Agency: Army
Property Number: 219610688
Status: Unutilized
Comment: 2160 & 2250 sq. ft., needs rehab, presence of asbestos, most recent use—admin., off-site use only.

Bldg. 2311
Fort Campbell
Ft. Campbell Co: Christian KY 42223–
Landholding Agency: Army
Property Number: 219610689
Status: Unutilized
Comment: 2500 sq. ft., needs rehab, presence of asbestos, most recent use—admin., off-site use only.

Bldg. 2313
Fort Campbell
Ft. Campbell Co: Christian KY 42223–
Landholding Agency: Army
Property Number: 219610690
Status: Unutilized
Comment: 2250 sq. ft., needs rehab, presence of asbestos, most recent use—admin., off-site use only.

Bldg. 2315
Fort Campbell
Ft. Campbell Co: Christian KY 42223–
Landholding Agency: Army
Property Number: 219610691
Status: Unutilized
Comment: 2250 sq. ft., needs rehab, presence of asbestos, most recent use—admin., off-site use only.

Bldg. 2317
Fort Campbell
Ft. Campbell Co: Christian KY 42223–
Landholding Agency: Army
Property Number: 219610692
Status: Unutilized
Comment: 2500 sq. ft., needs rehab, presence of asbestos, most recent use—admin., off-site use only.

Bldg. 2323
Fort Campbell
Ft. Campbell Co: Christian KY 42223–
Landholding Agency: Army
Property Number: 219610693
Status: Unutilized
Comment: 2250 sq. ft., needs rehab, presence of asbestos, most recent use—admin., off-site use only.

Bldg. 2325
Fort Campbell
Ft. Campbell Co: Christian KY 42223–
Landholding Agency: Army
Property Number: 219610694
Status: Unutilized
Comment: 2625 sq. ft., needs rehab, presence of asbestos, most recent use—admin., off-site use only.

Bldg. 2327
Fort Campbell
Ft. Campbell Co: Christian KY 42223–
Landholding Agency: Army
Property Number: 219610695
Status: Unutilized
Comment: 2500 sq. ft., presence of asbestos, most recent use—admin., off-site use only.

Bldg. 2329
Fort Campbell
Ft. Campbell Co: Christian KY 42223–
Landholding Agency: Army
Property Number: 219610696
Status: Unutilized
Comment: 2250 sq. ft., needs rehab, presence of asbestos, most recent use—admin., off-site use only.

Bldgs. 2336, 2346, 2348, 2513
Fort Campbell
Ft. Campbell Co: Christian KY 42223–
Landholding Agency: Army
Property Number: 219610697
Status: Unutilized
Comment: 5310 sq. ft. each, presence of asbestos, most recent use—admin., off-site use only.

Bldg. 2527
Fort Campbell
Ft. Campbell Co: Christian KY 42223–
Landholding Agency: Army
Property Number: 219610698
Status: Unutilized
Comment: 5310 sq. ft., needs rehab, presence of asbestos, most recent use—admin., off-site use only.

Bldg. 2537
Fort Campbell
Ft. Campbell Co: Christian KY 42223–
Landholding Agency: Army
Property Number: 219610699
Status: Unutilized
Comment: 5310 sq. ft., presence of asbestos, most recent use—admin., off-site use only.

Bldg. 2539
Fort Campbell
Ft. Campbell Co: Christian KY 42223–
Landholding Agency: Army
Property Number: 219610700
Status: Unutilized
Comment: 2500 sq. ft., presence of asbestos, most recent use—admin., off-site use only.

Bldg. 2642
Fort Campbell
Ft. Campbell Co: Christian KY 42223–
Landholding Agency: Army
Property Number: 219610701
Status: Unutilized
Comment: 5310 sq. ft., needs rehab, presence of asbestos, most recent use—admin., off-site use only.

Bldg. 2730
Fort Campbell
Ft. Campbell Co: Christian KY 42223–
Landholding Agency: Army
Property Number: 219610702
Status: Unutilized
Comment: 3060 sq. ft., needs rehab, presence of asbestos, most recent use—admin., off-site use only.

Bldg. 2734
Fort Campbell
Ft. Campbell Co: Christian KY 42223–
Landholding Agency: Army
Property Number: 219610703

Status: Unutilized
Comment: 2950 sq. ft., needs rehab, presence of asbestos, most recent use—admin., off-site use only.

Bldg. 2744
Fort Campbell
Ft. Campbell Co: Christian KY 42223–
Landholding Agency: Army
Property Number: 219610704
Status: Unutilized
Comment: 5310 sq. ft., needs rehab, presence of asbestos, most recent use—admin., off-site use only.

Bldg. 2909
Fort Campbell
Ft. Campbell Co: Christian KY 42223–
Landholding Agency: Army
Property Number: 219610705
Status: Unutilized
Comment: 1198 sq. ft., needs rehab, presence of asbestos, most recent use—admin., off-site use only.

Bldg. 3105
Fort Campbell
Ft. Campbell Co: Christian KY 42223–
Landholding Agency: Army
Property Number: 219610706
Status: Unutilized
Comment: 2750 sq. ft., needs rehab, presence of asbestos, most recent use—admin., off-site use only.

Bldg. 3108
Fort Campbell
Ft. Campbell Co: Christian KY 42223–
Landholding Agency: Army
Property Number: 219610707
Status: Unutilized
Comment: 7538 sq. ft., needs rehab, presence of asbestos, most recent use—admin., off-site use only.

Bldg. 2632
Fort Campbell
Ft. Campbell Co: Christian KY 42223–
Landholding Agency: Army
Property Number: 219620669
Status: Unutilized
Comment: 5310 sq. ft., most recent use—admin., possible asbestos, off-site use only.

Bldg. 2436
Fort Campbell
Ft. Campbell Co: Christian KY 42223–
Landholding Agency: Army
Property Number: 219620670
Status: Unutilized
Comment: 1200 sq. ft., most recent use—admin., possible asbestos, off-site use only.

Bldg. 2264
Fort Campbell
Ft. Campbell Co: Christian KY 42223–
Landholding Agency: Army
Property Number: 219620671
Status: Unutilized
Comment: 2500 sq. ft., most recent use—admin., possible asbestos, off-site use only.

Bldg. 2344
Fort Campbell
Ft. Campbell Co: Christian KY 42223–
Landholding Agency: Army
Property Number: 219620672
Status: Unutilized
Comment: 5310 sq. ft., most recent use—admin., needs repair, possible asbestos, off-site use only.

Bldg. 02157
Fort Campbell
Ft. Campbell Co: Christian KY 42223–
Landholding Agency: Army
Property Number: 219620673
Status: Unutilized
Comment: 2500 sq. ft., most recent use—admin., off-site use only.

Bldg. 6111
Fort Campbell
Ft. Campbell Co: Christian KY 42223–
Landholding Agency: Army
Property Number: 219620674
Status: Unutilized
Comment: 2700 sq. ft., most recent use—admin., off-site use only.

Bldg. 02411
Fort Campbell
Ft. Campbell Co: Christian KY 42223–
Landholding Agency: Army
Property Number: 219620675
Status: Unutilized
Comment: 5310 sq. ft., most recent use—admin., off-site use only.

Louisiana

Bldg. 7316, Fort Polk
Ft. Polk Co: Vernon LA 71459–
Landholding Agency: Army
Property Number: 219620676
Status: Underutilized
Comment: 507 sq. ft., most recent use—BOQ Transient.

Bldg. 7315, Fort Polk
Ft. Polk Co: Vernon LA 71459–
Landholding Agency: Army
Property Number: 219620677
Status: Underutilized
Comment: 507 sq. ft., most recent use—BOQ Transient.

Bldg. 7314, Fort Polk
Ft. Polk Co: Vernon LA 71459–
Landholding Agency: Army
Property Number: 219620678
Status: Underutilized
Comment: 507 sq. ft., most recent use—BOQ Transient.

Bldg. 7313, Fort Polk
Ft. Polk Co: Vernon LA 71459–
Landholding Agency: Army
Property Number: 219620679
Status: Underutilized
Comment: 507 sq. ft., most recent use—BOQ Transient.

Bldg. 7312, Fort Polk
Ft. Polk Co: Vernon LA 71459–
Landholding Agency: Army
Property Number: 219620680
Status: Underutilized
Comment: 507 sq. ft., most recent use—BOQ Transient.

Bldg. 7311, Fort Polk
Ft. Polk Co: Vernon LA 71459–
Landholding Agency: Army
Property Number: 219620681
Status: Underutilized
Comment: 643 sq. ft., most recent use—BOQ Transient.

Bldg. 7310, Fort Polk
Ft. Polk Co: Vernon LA 71459–
Landholding Agency: Army
Property Number: 219620682
Status: Underutilized
Comment: 643 sq. ft., most recent use—BOQ Transient.

Bldg. 7309, Fort Polk
Ft. Polk Co: Vernon LA 71459–
Landholding Agency: Army
Property Number: 219620683
Status: Underutilized
Comment: 643 sq. ft., most recent use—BOQ Transient, needs repair.

Maryland

Bldg. E5878
Aberdeen Proving Ground
Edgewood Area
Aberdeen City Co: Harford MD 21010–5425
Landholding Agency: Army
Property Number: 219012652
Status: Unutilized
Comment: 213 sq. ft.; structural deficiencies; possible abestos; and contamination.

Bldg. E5879
Aberdeen Proving Ground
Edgewood Area
Aberdeen City Co: Harford MD 21010–55425
Landholding Agency: Army
Property Number: 219012653
Status: Unutilized
Comment: 213 sq. ft.; possible asbestos and contamination; no utilities; most recent use—igloo storage.

Bldg. 10302
Aberdeen Proving Ground
Edgewood Area
Aberdeen City Co: Harford MD 21010–5425
Landholding Agency: Army
Property Number: 219012666
Status: Unutilized
Comment: 42 sq. ft.; possible asbestos; most recent use—pumping station.

Bldg. E5975
Aberdeen Proving Ground
Edgewood Area
Aberdeen City Co: Harford MD 21010–5425
Landholding Agency: Army
Property Number: 219012677
Status: Unutilized
Comment: 650 sq. ft.; possible contamination; structural deficiencies most recent use—training exercises/chemicals and explosives; potential use—storage.

Bldg. 6687
Fort George G. Meade
Mapes and Zimbroski Roads
Ft. Meade Co: Anne Arundel MD 20755–5115
Landholding Agency: Army
Property Number: 219220446
Status: Unutilized
Comment: 1150 sq. ft., presence of asbestos, wood frame, most recent use—veterinarian clinic, off-site removal only, sched. to be vacated 10/1/92.

Bldgs. 303–308, 323–328, 333–337
Forth George G. Meade
Ft. Meade Co: Anne Arundel MD 20755–5115
Landholding Agency: Army
Property Number: 219320293
Status: Unutilized
Comment: 4720 sq. ft. each, 2-story wood frame, possible asbestos, most recent use—barracks/classrooms, fair to good condition, off-site use only.

Bldg. 309
Fort George G. Meade
Ft. Meade Co: Anne Arundel MD 20755–5115
Landholding Agency: Army
Property Number: 219320294
Status: Unutilized

Comment: 2324 sq. ft., 1-story wood frame, possible asbestos, fair to good condition, off-site use only.

Bldgs. 313–314, 317–318
Fort George G. Meade
Ft. Meade Co: Anne Arundel MD 20755–5115
Landholding Agency: Army
Property Number: 219320296
Status: Unutilized
Comment: 1144 sq. ft., 1-story wood frame, possible asbestos, most recent use—storage, fair to good condition, off-site use only.

Bldgs. 2251, 2252
Fort Meade
Ft. Meade Co: Anne Arundel MD 20755–5115
Landholding Agency: Army
Property Number: 219430180
Status: Unutilized
Comment: 648 & 3594 sq. ft., 1-story, concrete/metal structure, needs rehab, presence of asbestos, most recent use—heating plant & admin.

Bldg. E4144
Aberdeen Proving Ground
Aberdeen Co: Harford MD 21005–5001
Landholding Agency: Army
Property Number: 219540001
Status: Unutilized
Comment: 1632 sq. ft., concrete frame bath house, 1 story, presence of asbestos and lead paint.

Missouri

Bldg. T599
Fort Leonard Wood
Ft. Leonard Wood Co: Pulaski MO 65473–5000
Landholding Agency: Army
Property Number: 219230260
Status: Underutilized
Comment: 18270 sq. ft., 1-story, presence of asbestos, most recent use—storehouse, off-site use only.

Bldg. T1311
Fort Leonard Wood
Ft. Leonard Wood Co: Pulaski MO 65473–5000
Landholding Agency: Army
Property Number: 219230261
Status: Underutilized
Comment: 2740 sq. ft., 1-story, presence of asbestos, most recent use—storehouse, off-site use only.

Bldg. T427
Fort Leonard Wood
Ft. Leonard Wood Co: Pulaski MO 65473–5000
Landholding Agency: Army
Property Number: 219330299
Status: Underutilized
Comment: 10245 sq. ft., 1-story, presence of asbestos, most recent use—post office, off-site use only.

Bldg. T2368
Fort Leonard Wood
Ft. Leonard Wood Co: Pulaski MO 65473–5000
Landholding Agency: Army
Property Number: 219330306
Status: Underutilized
Comment: 3663 sq. ft., 1-story, presence of asbestos, off-site use only.

Bldg. T3005
Fort Leonard Wood
Ft. Leonard Wood Co: Pulaski MO 65473–5000
Landholding Agency: Army
Property Number: 219330307
Status: Underutilized
Comment: 2220 sq. ft., 1-story, presence of asbestos, most recent use—motor repair shop, off-site use only.

Bldg. T2171
Fort Leonard Wood
Ft. Leonard Wood Co: Pulaski MO 65473–5000
Landholding Agency: Army
Property Number: 219340212
Status: Unutilized
Comment: 1296 sq. ft., 1-story wood frame, most recent use—administrative, no handicap fixtures, lead base paint, off-site use only.

Bldg. T2312
Fort Leonard Wood
Ft. Leonard Wood Co: Pulaski MO 65473–5000
Landholding Agency: Army
Property Number: 219340217
Status: Underutilized
Comment: 1403 sq. ft., 1-story wood frame, most recent use—paint shop, no handicap fixtures, lead base paint, off-site use only.

Bldg. T6822
Fort Leonard Wood
Ft. Leonard Wood Co: Pulaski MO 65473–5000
Landholding Agency: Army
Property Number: 219340219
Status: Underutilized
Comment: 4000 sq. ft., 1-story wood frame, most recent use—storage, no handicap fixtures, off-site use only.

Bldg. T1363
Fort Leonard Wood
Ft. Leonard Wood Co: Pulaski MO 65473–5000
Landholding Agency: Army
Property Number: 219420392
Status: Underutilized
Comment: 1296 sq. ft., 1-story, presence of lead base paint, most recent use—storage, off-site use only.

Bldg. T1364
Fort Leonard Wood
Ft. Leonard Wood Co: Pulaski MO 65473–5000
Landholding Agency: Army
Property Number: 219420393
Status: Underutilized
Comment: 1144 sq. ft., 1-story, presence of lead base paint, most recent use—storage, off-site use only.

Bldg. T281
Fort Leonard Wood
Ft. Leonard Wood Co: Pulaski MO 65473–5000
Landholding Agency: Army
Property Number: 219420397
Status: Underutilized
Comment: 4230 sq. ft., 1-story, presence of lead base paint, most recent use—admin/gen. purpose, off-site use only.

Bldg. T282
Fort Leonard Wood
Ft. Leonard Wood Co: Pulaski MO 65473–5000
Landholding Agency: Army
Property Number: 219420398
Status: Underutilized
Comment: 15923 sq. ft., 2-story, presence of lead base paint, most recent use—admin/gen. purpose, off-site use only.

Bldg. T283
Fort Leonard Wood
Ft. Leonard Wood Co: Pulaski MO 65473–5000
Landholding Agency: Army
Property Number: 219420431
Status: Underutilized
Comment: 6163 sq. ft., 2-story, presence of lead base paint, most recent use—admin/gen. purpose, off-site use only.

Bldg. T407
Fort Leonard Wood
Ft. Leonard Wood Co: Pulaski MO 65473–5000
Landholding Agency: Army
Property Number: 219420432
Status: Underutilized
Comment: 2265 sq. ft., 1-story, presence of lead base paint, most recent use—admin/gen. purpose, off-site use only.

Bldg. T408
Fort Leonard Wood
Ft. Leonard Wood Co: Pulaski MO 65473–5000
Landholding Agency: Army
Property Number: 219420433
Status: Underutilized
Comment: 10296 sq. ft., 1-story, presence of lead base paint, most recent use—admin/gen. purpose, off-site use only.

Bldg. T409
Fort Leonard Wood
Ft. Leonard Wood Co: Pulaski MO 65473–5000
Landholding Agency: Army
Property Number: 219420434
Status: Underutilized
Comment: 2450 sq. ft., 1-story, presence of lead base paint, most recent use—admin/gen. purpose, off-site use only.

Bldg. T410
Fort Leonard Wood
Ft. Leonard Wood Co: Pulaski MO 65473–5000
Landholding Agency: Army
Property Number: 219420435
Status: Underutilized
Comment: 2664 sq. ft., 1-story, presence of lead base paint, most recent use—admin/gen. purpose, off-site use only.

Bldg. T412
Fort Leonard Wood
Ft. Leonard Wood Co: Pulaski MO 65473–5000
Landholding Agency: Army
Property Number: 219420437
Status: Unutilized
Comment: 1296 sq. ft., 1-story, presence of lead base paint, most recent use—admin/gen. purpose, off-site use only.

Bldg. T415
Fort Leonard Wood
Ft. Leonard Wood Co: Pulaski MO 65473–5000
Landholding Agency: Army
Property Number: 219420438
Status: Unutilized
Comment: 1144 sq. ft., 1-story, presence of lead base paint, most recent use—admin/gen. purpose, off-site use only.

Bldg. T429

Fort Leonard Wood
Ft. Leonard Wood Co: Pulaski MO 65473–5000
Landholding Agency: Army
Property Number: 219420439
Status: Unutilized
Comment: 2475 sq. ft., 1-story, presence of lead base paint, most recent use—admin/gen. purpose, off-site use only.

Bldg. T1100
Fort Leonard Wood
Ft. Leonard Wood Co: Pulaski MO 65473–5000
Landholding Agency: Army
Property Number: 219420440
Status: Unutilized
Comment: 3236 sq. ft., 1-story, presence of lead base paint, most recent use—admin/gen. purpose, off-site use only.

Bldg. T1497
Fort Leonard Wood
Ft. Leonard Wood Co: Pulaski MO 65473–5000
Landholding Agency: Army
Property Number: 219420441
Status: Unutilized
Comment: 4720 sq. ft., 2-story, presence of lead base paint, most recent use—admin/gen. purpose, off-site use only.

Bldg. T2139
Fort Leonard Wood
Ft. Leonard Wood Co: Pulaski MO 65473–5000
Landholding Agency: Army
Property Number: 219420446
Status: Unutilized
Comment: 3663 sq. ft., 1-story, presence of lead base paint, most recent use—admin/gen. purpose, off-site use only.

Bldg. T2191
Fort Leonard Wood
Ft. Leonard Wood Co: Pulaski MO 65473–5000
Landholding Agency: Army
Property Number: 219440334
Status: Excess
Comment: 4720 sq. ft., 2 story wood frame, off-site removal only, to be vacated 8/95, lead based paint, most recent use—barracks.

Bldg. T2197
Fort Leonard Wood
Ft. Leonard Wood Co: Pulaski MO 65473–5000
Landholding Agency: Army
Property Number: 219440335
Status: Excess
Comment: 4720 sq. ft., 2 story wood frame, off-site removal only, to be vacated 8/95, lead based paint, most recent use—barracks.

Bldg. T403
Fort Leonard Wood
Ft. Leonard Wood Co: Pulaski MO 65473–
Landholding Agency: Army
Property Number: 219510107
Status: Excess
Comment: 5818 sq. ft., 1-story, wood frame, most recent use—admin., to be vacated 8/95, off-site use only.

Bldg. T460
Fort Leonard Wood
Ft. Leonard Wood Co: Pulaski MO 65473–
Landholding Agency: Army
Property Number: 219510108
Status: Excess
Comment: 5428 sq. ft., 1-story, wood frame, most recent use—admin., to be vacated 8/95, off-site use only.

Bldg. T464
Fort Leonard Wood
Ft. Leonard Wood Co: Pulaski MO 65473–
Landholding Agency: Army
Property Number: 219510109
Status: Excess
Comment: 5310 sq. ft., 2-story, wood frame, most recent use—admin., to be vacated 8/95, off-site use only.

Bldg. T590
Fort Leonard Wood
Ft. Leonard Wood Co: Pulaski MO 65473–
Landholding Agency: Army
Property Number: 219510110
Status: Excess
Comment: 3263 sq. ft., 1-story, wood frame, most recent use—admin., to be vacated 8/95, off-site use only.

Bldg. T1246
Fort Leonard Wood
Ft. Leonard Wood Co: Pulaski MO 65473–
Landholding Agency: Army
Property Number: 219510111
Status: Excess
Comment: 1144 sq. ft., 1-story, wood frame, most recent use—admin., to be vacated 8/95, off-site use only.

Bldg. T2385
Fort Leonard Wood
Ft. Leonard Wood Co: Pulaski MO 65473–
Landholding Agency: Army
Property Number: 219510115
Status: Excess
Comment: 3158 sq. ft., 1-story, wood frame, most recent use—admin., to be vacated 8/95, off-site use only.

Bldg. T3007
Fort Leonard Wood
Ft. Leonard Wood Co: Pulaski MO 65473–
Landholding Agency: Army
Property Number: 219510116
Status: Excess
Comment: 4687 sq. ft., 1-story, wood frame, most recent use—admin., to be vacated 8/95, off-site use only.

Bldg. T3008
Fort Leonard Wood
Ft. Leonard Wood Co: Pulaski MO 65473–
Landholding Agency: Army
Property Number: 219510117
Status: Excess
Comment: 4687 sq. ft., 1-story, wood frame, most recent use—admin., to be vacated 8/95, off-site use only.

Bldg. T3010
Fort Leonard Wood
Ft. Leonard Wood Co: Pulaski MO 65473–
Landholding Agency: Army
Property Number: 219510118
Status: Excess
Comment: 4687 sq. ft., 1-story, wood frame, most recent use—admin., to be vacated 8/95, off-site use only.

Bldg. T3011
Fort Leonard Wood
Ft. Leonard Wood Co: Pulaski MO 65473–
Landholding Agency: Army
Property Number: 219510119
Status: Excess
Comment: 4687 sq. ft. 1-story, wood frame, most recent use—admin., to be vacated 8/95, off-site use only.

Nevada

Bldgs. 00425–00449
Hawthorne Army Ammunition Plant
Schweer Drive Housing Area
Hawthorne Co: Mineral NV 89415–
Landholding Agency: Army
Property Number: 219011946
Status: Unutilized
Comment: 1310–1640 sq ft., one floor residential, semi/wood construction, good condition.

New Mexico

Bldg. 149
White Sands Missile Range
White Sands Co: Dona Ana NM 88002–
Landholding Agency: Army
Property Number: 219330333
Status: Unutilized
Comment: 3570 sq. ft., 2-story, needs rehab, presence of asbestos, most recent use—admin., off-site use only.

Bldg. 150
White Sands Missile Range
White Sands Co: Dona Ana NM 88002–
Landholding Agency: Army
Property Number: 219330334
Status: Unutilized
Comment: 3750 sq. ft., 2-story, presence of asbestos, most recent use—admin., off-site use only.

Bldg. 357
White Sands Missile Range
White Sands Co: Dona Ana NM 88002–
Landholding Agency: Army
Property Number: 219330335
Status: Unutilized
Comment: 3600 sq. ft., 2-story, presence of asbestos, most recent use—admin., off-site use only.

Bldg. 1758
White Sands Missile Range
White Sands Co: Dona Ana NM 88002–
Landholding Agency: Army
Property Number: 219330336
Status: Unutilized
Comment: 1620 sq. ft., 1-story, presence of asbestos, most recent use—admin., off-site use only.

Bldg. 1768
White Sands Missile Range
White Sands Co: Dona Ana NM 88002–
Landholding Agency: Army
Property Number: 219330337
Status: Unutilized
Comment: 15.333 sq. ft., 1-story, presence of asbestos, most recent use—admin., off-site use only.

Bldg. 28281
White Sands Missile Range
White Sands Co: Dona Ana NM 88002–
Landholding Agency: Army
Property Number: 219330338
Status: Unutilized
Comment: 1856 sq. ft., 1-story, presence of asbestos, most recent use—admin., off-site use only.

Bldg. 28282
White Sands Missile Range
White Sands Co: Dona Ana NM 88002–
Landholding Agency: Army
Property Number: 219330339

Status: Unutilized
Comment: 1850 sq. ft., 3-story, needs rehab, presence of asbestos, most recent use—admin., off-site use only.

Bldg. 32980
White Sands Missile Range
White Sands Co: Dona Ana NM 88002–
Landholding Agency: Army
Property Number: 219330340
Status: Unutilized
Comment: 451 sq. ft., 1-story, presence of asbestos, most recent use—admin., off-site use only.

Bldg. 34252
White Sands Missile Range
White Sands Co: Dona Ana NM 88002–
Landholding Agency: Army
Property Number: 219330341
Status: Unutilized
Comment: 720 sq. ft., 1-story, presence of asbestos, most recent use—admin., off-site use only.

Bldg. 418
White Sands Missile Range
White Sands Co: Dona Ana NM 88002–
Landholding Agency: Army
Property Number: 219330342
Status: Unutilized
Comment: 3690 sq. ft., 1-story, presence of asbestos, most recent use—storage, off-site use only.

Bldg. 420
White Sands Missile Range
White Sands Co: Dona Ana NM 88002–
Landholding Agency: Army
Property Number: 219330343
Status: Unutilized
Comment: 2407 sq. ft., 1-story, presence of asbestos, most recent use—storage, off-site use only.

Bldg. 1348
White Sands Missile Range
White Sands Co: Dona Ana NM 88002–
Landholding Agency: Army
Property Number: 219330345
Status: Unutilized
Comment: 720 sq. ft., 1-story, needs rehab, presence of asbestos, most recent use—storage, off-site use only.

Bldg. 1765
White Sands Missile Range
White Sands Co: Dona Ana NM 88002–
Landholding Agency: Army
Property Number: 219330347
Status: Unutilized
Comment: 600 sq. ft., 1-story, presence of asbestos, most recent use—storage, off-site use only.

Bldg. 21542
White Sands Missile Range
White Sands Co: Dona Ana NM 88002–
Landholding Agency: Army
Property Number: 219330348
Status: Unutilized
Comment: 945 sq. ft., 1-story, presence of asbestos, most recent use—storage, off-site use only.

Bldg. 22118
White Sands Missile Range
White Sands Co: Dona Ana NM 88002–
Landholding Agency: Army
Property Number: 219330349
Status: Unutilized
Comment: 1341 sq. ft., 1-story, presence of asbestos, most recent use—storage, off-site use only.

Bldg. 22253
White Sands Missile Range
White Sands Co: Dona Ana NM 88002–
Landholding Agency: Army
Property Number: 219330350
Status: Unutilized
Comment: 216 sq. ft., 1-story, presence of asbestos, most recent use—storage, off-site use only.

Bldg. 28267
White Sands Missile Range
White Sands Co: Dona Ana NM 88002–
Landholding Agency: Army
Property Number: 219330351
Status: Unutilized
Comment: 617 sq. ft., 1-story, presence of asbestos, most recent use—storage, off-site use only.

Bldg. 29195
White Sands Missile Range
White Sands Co: Dona Ana NM 88002–
Landholding Agency: Army
Property Number: 219330352
Status: Unutilized
Comment: 56 sq. ft., 1-story, presence of asbestos, most recent use—storage, off-site use only.

Bldg. 34219
White Sands Missile Range
White Sands Co: Dona Ana NM 88002–
Landholding Agency: Army
Property Number: 219330353
Status: Unutilized
Comment: 720 sq. ft., 1-story, presence of asbestos, most recent use—storage, off-site use only.

Bldg. 34221
White Sands Missile Range
White Sands Co: Dona Ana NM 88002–
Landholding Agency: Army
Property Number: 219330354
Status: Unutilized
Comment: 720 sq. ft., 1-story, presence of asbestos, most recent use—storage, off-site use only.

Bldg. 145
White Sands Missile Range
White Sands Co: Dona Ana NM 88002–
Landholding Agency: Army
Property Number: 219330355
Status: Unutilized
Comment: 2954 sq. ft., 1-story, presence of asbestos, most recent use—chapel, off-site use only.

Bldg. 1754
White Sands Missile Range
White Sands Co: Dona Ana NM 88002–
Landholding Agency: Army
Property Number: 219330356
Status: Unutilized
Comment: 6974 sq. ft., 1-story, presence of asbestos, most recent use—maintenance shop, off-site use only.

Bldg. 19242
White Sands Missile Range
White Sands Co: Dona Ana NM 88002–
Landholding Agency: Army
Property Number: 219330357
Status: Unutilized
Comment: 450 sq. ft., 1-story, presence of asbestos, most recent use—maintenance shop, off-site use only.

Bldg. 34227
White Sands Missile Range
White Sands Co: Dona Ana NM 88002–
Landholding Agency: Army
Property Number: 219330358
Status: Unutilized
Comment: 675 sq. ft., 1-story, presence of asbestos, most recent use—maintenance shop, off-site use only.

Bldg. 34244
White Sands Missile Range
White Sands Co: Dona Ana NM 88002–
Landholding Agency: Army
Property Number: 219330359
Status: Unutilized
Comment: 720 sq. ft., 1-story, presence of asbestos, most recent use—maintenance shop, off-site use only.

Bldg. 21105
White Sands Missile Range
White Sands Co: Dona Ana NM 88002–
Landholding Agency: Army
Property Number : 219330360
Status: Unutilized
Comment: 239 sq. ft., presence of asbestos, most recent use—veterinarian facility, off-site only.

Bldg. 21106
White Sands Missile Range
White Sands Co: Dona Ana NM 88002–
Landholding Agency: Army
Property Number : 219330361
Status: Unutilized
Comment: 405 sq. ft., 1-story, presence of asbestos, most recent use—veterinarian facility, off-site use only.

Bldg. 21310
White Sands Missile Range
White Sands Co: Dona Ana NM 88002–
Landholding Agency: Army
Property Number : 219330362
Status: Unutilized
Comment: 1006 sq. ft., 1-story, presence of asbestos, most recent use—transmitter bldg., off-site use only.

Bldg. 29890
White Sands Missile Range
White Sands Co: Dona Ana NM 88002–
Landholding Agency: Army
Property Number : 219330363
Status: Unutilized
Comment: 450 sq. ft., 1-story, presence of asbestos, most recent use—frequency monitoring station, off-site use only.

Bldg. 1868
White Sands Missile Range
White Sands Co: Dona Ana NM 88002–
Landholding Agency: Army
Property Number : 219330364
Status: Unutilized
Comment: 41 sq. ft., 1-story presence of asbestos, most recent use—scale house, off-site use only.

Bldg. 528
White Sands Missile Range
White Sands Co: Dona Ana NM 88002–
Landholding Agency: Army
Property Number : 219330365
Status: Unutilized
Comment: 225 sq. ft., 1-story, presence of asbestos, most recent use—decontamination shelter, off-site use only.

Bldg. 1834
White Sands Missile Range

White Sands Co: Dona Ana NM 88002–
Landholding Agency: Army
Property Number : 219330366
Status: Unutilized
Comment: 150 sq. ft., 1-story, presence of asbestos, most recent use—animal kennel, off-site use only.

Bldg. 1300
White Sands Missile Range
White Sands Co: Dona Ana NM 88002–
Landholding Agency: Army
Property Number : 219330367
Status: Unutilized
Comment: 1500 sq. ft., 1-story, presence of asbestos, most recent use—indoor small arms range, off-site use only.

Bldg. 23100
White Sands Missile Range
White Sands Co: Dona Ana NM 88002–
Landholding Agency: Army
Property Number : 219330368
Status: Unutilized
Comment: 40 sq. ft., 1-story, presence of asbestos, most recent use—sentry station, off-site use only.

Bldg. 29196
White Sands Missile Range
White Sands Co: Dona Ana NM 88002–
Landholding Agency: Army
Property Number : 219330369
Status: Unutilized
Comment: 38 sq. ft., 1-story, presence of asbestos, most recent use—power plant bldg., off-site use only.

Bldg. 30774
White Sands Missile Range
White Sands Co: Dona Ana NM 88002–
Landholding Agency: Army
Property Number : 219330370
Status: Unutilized
Comment: 176 sq. ft., 1-story, presence of asbestos, off-site use only.

Bldg. 33136
White Sands Missile Range
White Sands Co: Dona Ana NM 88002–
Landholding Agency: Army
Property Number : 219330371
Status: Unutilized
Comment: 18 sq. ft., off-site use only.

New York

Bldg. 323
Fort Totten
Story Avenue
Bayside Co: Queens NY 11359–
Landholding Agency: Army
Property Number : 219012567
Status: Underutilized
Comment: 30000 sq. ft., 3 floors, most recent use—barracks & mess facility, needs major rehab.

Bldg. 304
Fort Totten
Shore Road
Bayside Co: Queens NY 11359–
Landholding Agency: Army
Property Number: 219012570
Status: Underutilized
Comment: 9610 sq. ft., 3 floors, most recent use–hospital, needs major rehab/utilities disconnected.

Bldg. 211
Fort Totten
211 Totten Avenue
Bayside Co: Queens NY 11359–
Landholding Agency: Army
Property Number: 219012573
Status: Underutilized
Comment: 6329 sq. ft., 3 floors, most recent use—family housing, needs major rehab, utilities disconnected.

Bldg. 332
Fort Totten
Theater Road
Bayside Co: Queens NY 11359–
Landholding Agency: Army
Property Number: 219012578
Status: Underutilized
Comment: 6288 sq. ft., 1 floor, most recent use—theater w/stage, needs major rehab, utilities disconnected.

Bldg. 322
Fort Totten
322 Story Avenue
Bayside Co: Queens NY 11359–
Landholding Agency: Army
Property Number: 219012583
Status: Underutilized
Comment: 30000 sq. ft., 3 floors, most recent use—barracks, mess and administration, utilities disconnected, needs rehab.

Bldg. 326
Fort Totten
326 Pratt Avenue
Bayside Co: Queens NY 11359–
Landholding Agency: Army
Property Number: 219012586
Status: Underutilized
Comment: 6000 sq. ft., 2 floors, most recent use—storage, offices & residential, utilities disconnected/needs rehab.

Bldg. 100, Fort Hamilton
Bellmore Co: Nassau NY 11710–
Landholding Agency: Army
Property Number: 219340254
Status: Underutilized
Comment: 155 sq. ft., 1-story, most recent use—storage.

Bldg. 200, Fort Hamilton
Bellmore Co: Nassau NY 11710–
Landholding Agency: Army
Property Number: 219340255
Status: Underutilized
Comment: 12000 sq. ft., 1-story, most recent use—office.

Bldg. 300, Fort Hamilton
Bellmore Co: Nassau NY 11710–
Landholding Agency: Army
Property Number: 219340256
Status: Underutilized
Comment: 11000 sq. ft., 1-story, most recent use—reserve center.

Bldg. 900, Fort Hamilton
Bellmore Co: Nassau NY 11710–
Landholding Agency: Army
Property Number: 219430259
Status: Underutilized
Comment: 400 sq. ft., 1-story, needs rehab, most recent use—material storage.

Bldg. P–2012, Fort Drum
Ft. Drum Co: Jefferson NY 13602–
Landholding Agency: Army
Property Number: 219440429
Status: Unutilized
Comment: 450 sq. ft., most recent use—water distribution bldg., off-site use only.

Bldg. T–2420, Fort Drum
Ft. Drum Co: Jefferson NY 13602–
Landholding Agency: Army
Property Number: 219440431
Status: Unutilized
Comment: 4340 sq. ft., 1-story, most recent use—warehouse, needs rehab, off-site use only.

Bldg. T–601, Fort Drum
Ft. Drum Co: Jefferson NY 13602–
Landholding Agency: Army
Property Number: 219520193
Status: Unutilized
Comment: 2305 sq. ft., 1-story, needs rehab, most recent use—NCO club, off-site use only.

Bldgs. 2611, 2613, 2615, 2617
Stewart Army Subpost
New Windsor Co: Orange NY 12553–
Landholding Agency: Army
Property Number: 219610721
Status: Unutilized
Comment: 4 detached garages with 2-vehicle parking per garage, off-site use only.

Bldg. 148
West Point
Highlands Co: Orange NY 10996–1592
Landholding Agency: Army
Property Number: 219610722
Status: Unutilized
Comment: 1900 sq. ft., 2-story brick residence, possible lead base paint, off-site use only.

Bldg. 1342
West Point
Highlands Co: Orange NY 10996–1592
Landholding Agency: Army
Property Number: 219610723
Status: Unutilized
Comment: 400 sq. ft. detached garage, possible lead base paint, off-site use only.

North Carolina

Bldg. 3–2331, Fort Bragg
Ft. Bragg Co: Cumberland NC 28307–
Landholding Agency: Army
Property Number: 219610724
Status: Unutilized
Comment: 1027 sq. ft. needs repair, possible asbestos, most recent use—storage, off-site use only.

Bldg. N–3931, Fort Bragg
Ft. Bragg Co: Cumberland NC 28307–
Landholding Agency: Army
Property Number: 219610725
Status: Unutilized
Comment: 3258 sq. ft., needs repair, possible asbestos, most recent use—admin., off-site use only.

Bldg. N–4921, Fort Bragg
Ft. Bragg Co: Cumberland NC 28307–
Landholding Agency: Army
Property Number: 219610727
Status: Unutilized
Comment: 5676 sq. ft., needs repair, possible asbestos, most recent use—maintenance, off-site use only.

Bldg. O–9064
Fort Bragg
Ft. Bragg Co: Cumberland NC 28307–
Landholding Agency: Army
Property Number: 219620686
Status: Unutilized
Comment: 480 sq. ft., most recent use—storage bldg., possible asbestos, needs repair, off-site use only.

Bldg. O–9107
Fort Bragg

Ft. Bragg Co: Cumberland NC 28307–
Landholding Agency: Army
Property Number: 219620687
Status: Unutilized
Comment: 80 sq. ft., most recent use—storage shed, possible asbestos, off-site use only.

Ohio

15 Units
Military Family Housing
Ravenna Army Ammunition Plant
Ravenna Co: Portage OH 44266–9297
Landholding Agency: Army
Property Number: 219230354
Status: Excess
Comment: 3 bedroom (7 units)—1,824 sq. ft. each, 4 bedroom (8 units)—2,430 sq. ft. each, 2-story wood frame, presence of asbestos, off-site use only.

7 Units
Military Family Housing Garages
Ravenna Army Ammunition Plant
Ravenna Co: Portage OH 44266-9297
Landholding Agency: Army
Property Number: 219230355
Status: Excess
Comment: 1 4-stall garage and 6 3-stall garages, presence of asbestos, off-site use only.

Bldg. P–3
Doan U.S. Army Reserve Center
Portmonth Co: Scioto OH 45662–
Landholding Agency: Army
Property Number: 219320311
Status: Unutilized
Comment: 10752 sq. ft., 1-story brick, most recent use—office, possible asbestos.

Bldg. P–4
Doan U.S. Army Reserve Center
Portmonth Co: Scioto OH 45662–
Landholding Agency: Army
Property Number: 219320312
Status: Unutilized
Comment: 2508 sq. ft., 1-story brick, most recent use—vehicle maint. shop.

Oklahoma

Bldg. T–2606
Fort Sill
2606 Currie Road
Lawton Co: Comanche OK 73503–5100
Landholding Agency: Army
Property Number: 219011273
Status: Unutilized
Comment: 2722 sq. ft.; possible asbestos, one floor wood frame; most recent use—Headquarters Bldg.

Bldg. T–838, Fort Sill
838 Macomb Road
Lawton Co: Comanche OK 73503–5100
Landholding Agency: Army
Property Number: 219220609
Status: Unutilized
Comment: 151 sq. ft., wood frame, 1 story, off-site removal only, most recent use—vet facility (quarantine stable).

Bldg. T–954, Fort Sill
954 Quinette Road
Lawton Co: Comanche OK 73503–5100
Landholding Agency: Army
Property Number: 219240659
Status: Unutilized
Comment: 3571 sq. ft., 1 story wood frame, needs rehab, off-site use only, most recent use—motor repair shop.

Bldg. T–1050, Fort Sill
1050 Quinette Road
Lawton Co: Comanche OK 73503–5100
Landholding Agency: Army
Property Number: 219240660
Status: Unutilized
Comment: 6240 sq. ft., 2 story wood frame, needs rehab, off-site use only, most recent use—barracks.

Bldg. T–1051, Fort Sill
1051 Quinette Road
Lawton Co: Comanche OK 73503–5100
Landholding Agency: Army
Property Number: 219240661
Status: Unutilized
Comment: 6240 sq. ft., 2 story wood frame, needs rehab, off-site use only, most recent use—barracks.

Bldg. T–2740, Fort Sill
2740 Miner Road
Lawton Co: Comanche OK 73503–5100
Landholding Agency: Army
Property Number: 219240669
Status: Unutilized
Comment: 8210 sq. ft., 2 story wood frame, needs rehab, off-site use only, most recent use—enlisted barracks.

Bldg. T–2633, Fort Sill
2633 Miner Road
Lawton Co: Comanche OK 73503–5100
Landholding Agency: Army
Property Number: 219240672
Status: Unutilized
Comment: 19455 sq. ft., 1-story wood frame, needs rehab, off-site use only, most recent use—enlisted mess.

Bldg. T–4050, Fort Sill
4050 Pitman Street
Lawton Co: Comanche OK 73503–5100
Landholding Agency: Army
Property Number: 219240676
Status: Unutilized
Comment: 3177 sq. ft., 1-story wood frame, needs rehab, off-site use only, most recent use—storage.

Bldg. P–3032, Fort Sill
3032 Haskins Road
Lawton Co: Comanche OK 73503–5100
Landholding Agency: Army
Property Number: 219240678
Status: Unutilized
Comment: 101 sq. ft., 1-story wood frame, needs rehab, off-site use only, most recent use—general storehouse.

Bldg. T–3325, Fort Sill
3325 Naylor Road
Lawton Co: Comanche OK 73503–5100
Landholding Agency: Army
Property Number: 219240681
Status: Unutilized
Comment: 8832 sq. ft., 1-story wood frame, needs rehab, off-site use only, most recent use—warehouse.

Bldg. T–260, Fort Sill
260 Corral Road
Lawton Co: Comanche OK 73503–5100
Landholding Agency: Army
Property Number: 219240776
Status: Unutilized
Comment: 4838 sq. ft., 1-story wood frame, off-site use only, possible asbestos, most recent use—admin.

Bldg. T–5122, Fort Sill
Lawton Co: Comanche OK 73503–5100
Landholding Agency: Army
Property Number: 219320334
Status: Unutilized
Comment: 1-story wood frame, possible asbestos, off-site use only.

Bldg. P–6220, Fort Sill
Lawton Co: Comanche OK 73503–5100
Landholding Agency: Army
Property Number: 219320335
Status: Unutilized
Comment: 848 sq. ft., 1-story metal frame, possible asbestos, most recent use—construction bldg., off-site use only.

Bldg. S–6228, Fort Sill
Lawton Co: Comanche OK 73503–5100
Landholding Agency: Army
Property Number: 219320336
Status: Unutilized
Comment: 352 sq. ft., 1-story wood frame, possible asbestos, most recent use—range house, off-site use only.

Bldg. P–2610, Fort Sill
Lawton Co: Comanche OK 73503–5100
Landholding Agency: Army
Property Number: 219330372
Status: Unutilized
Comment: 512 sq. ft., 1-story possible asbestos, most recent use—classroom, off-site use only.

Bldg. 4722, Fort Sill
Lawton Co: Comanche OK 73503–5100
Landholding Agency: Army
Property Number: 219330373
Status: Unutilized
Comment: 3375 sq. ft., 2-story, possible asbestos, most recent use—admin., off-site use only.

Bldg. T1652, Fort Sill
Lawton Co: Comanche OK 73503–5100
Landholding Agency: Army
Property Number: 219330380
Status: Unutilized
Comment: 1505 sq. ft., 1-story wood, possible asbestos, most recent use—storage, off-site use only.

Bldg. T1665, Fort Sill
Lawton Co: Comanche OK 73503–5100
Landholding Agency: Army
Property Number: 219330381
Status: Unutilized
Comment: 1305 sq. ft., 1-story wood, possible asbestos, most recent use—storage, off-site use only.

Bldg. T2034, Fort Sill
Lawton Co: Comanche OK 73503–5100
Landholding Agency: Army
Property Number: 219330383
Status: Unutilized
Comment: 401 sq. ft., 1-story wood, possible asbestos, most recent use—storage, off-site use only.

Bldg. T2705, Fort Sill
Lawton Co: Comanche OK 73503–5100
Landholding Agency: Army
Property Number: 219330384
Status: Unutilized
Comment: 1601 sq. ft., 2-story wood, possible asbestos, most recent use—storage, off-site use only.

Bldg. T2706, Fort Sill
Lawton Co: Comanche OK 73503–5100
Landholding Agency: Army
Property Number: 219330385
Status: Unutilized

Comment: 2156 sq. ft., 2-story wood, possible asbestos, most recent use—storage, off-site use only.

Bldg. T2709, Fort Sill
Lawton Co: Comanche OK 73503–5100
Landholding Agency: Army
Property Number: 219330388
Status: Unutilized
Comment: 2112 sq. ft., 2-story wood, possible asbestos, most recent use—storage, off-site use only.

Bldg. T2756, Fort Sill
Lawton Co: Comanche OK 73503–5100
Landholding Agency: Army
Property Number: 219330390
Status: Unutilized
Comment: 5172 sq. ft., 1-story wood, possible asbestos, most recent use—storage, off-site use only.

Bldg. T2757, Fort Sill
Lawton Co: Comanche OK 73503–5100
Landholding Agency: Army
Property Number: 219330391
Status: Unutilized
Comment: 5172 sq. ft., 1-story wood, possible asbestos, most recent use—storage, off-site use only.

Bldg. T3026, Fort Sill
Lawton Co: Comanche OK 73503–5100
Landholding Agency: Army
Property Number: 219330392
Status: Unutilized
Comment: 2454 sq. ft., 1-story, possible asbestos, most recent use—storage, off-site use only.

Bldg. T4035, Fort Sill
Lawton Co: Comanche OK 73503–5100
Landholding Agency: Army
Property Number: 219330401
Status: Unutilized
Comment: 867 sq. ft., 1-story, possible asbestos, most recent use—storage, off-site use only.

Bldg. T4474, Fort Sill
Lawton Co: Comanche OK 73503–5100
Landholding Agency: Army
Property Number: 219330402
Status: Unutilized
Comment: 1159 sq. ft., 1-story, possible asbestos, most recent use—storage, off-site use only.

Bldg. T5628, Fort Sill
Lawton Co: Comanche OK 73503–5100
Landholding Agency: Army
Property Number: 219330418
Status: Unutilized
Comment: 2016 sq. ft., 1 story, possible asbestos, most recent use—storage, off-site use only.

Bldg. T5637, Fort Sill
Lawton Co: Comanche OK 73503–5100
Landholding Agency: Army
Property Number: 219330419
Status: Unutilized
Comment: 1606 sq. ft., 1 story, possible asbestos, most recent use—storage, off-site use only.

Bldg. T3750, Fort Sill
3750 Wilson Street
Lawton Co: Comanche OK 73503–
Landholding Agency: Army
Property Number: 219440358
Status: Excess
Comment: 4525 sq. ft., 2 story wood frame, possible asbestos and lead paint, off-site removal only, most recent use—barracks.

Bldg. T5215
Fort Sill
Lawton Co: Comanche OK 73503–
Landholding Agency: Army
Property Number: 219440376
Status: Unutilized
Comment: 2797 sq. ft., 1-story wood frame, possible asbestos and lead paint, most recent use—admin., off-site use only.

Bldg. T–5219
Fort Sill
Lawton Co: Comanche OK 73503–
Landholding Agency: Army
Property Number: 219440381
Status: Unutilized
Comment: 2662 sq. ft., 1-story wood frame, possible asbestos and lead paint, most recent use—classroom, off-site use only.

Bldg. T–4226
Fort Sill
Lawton Co: Comanche OK 73503–
Landholding Agency: Army
Property Number: 219440384
Status: Unutilized
Comment: 114 sq. ft., 1-story wood frame, possible asbestos and lead paint, most recent use—storage, off-site use only.

Bldg. P–1815
Fort Sill
Lawton Co: Comanche OK 73503–
Landholding Agency: Army
Property Number: 219440388
Status: Unutilized
Comment: 14392 sq. ft., 2-story wood frame, possible asbestos and lead paint, most recent use—storage, off-site use only.

Bldg. P–1015, Fort Sill
Lawton Co: Comanche OK 73501–5100
Landholding Agency: Army
Property Number: 219520197
Status: Unutilized
Comment: 15402 sq. ft., 1-story, most recent use—storage, off-site use only.

Bldg. T–2405, Fort Sill
2405 Darby Loop
Lawton Co: Comanche OK 73503–5100
Landholding Agency: Army
Property Number: 219540019
Status: Excess
Comment: 114 sq. ft., 1 story steel frame, possible asbestos/lead paint, off-site removal only, most recent use—flammable material storage.

Bldg. T–2645, Fort Sill
2645 Tacy Street
Lawton Co: Comanche OK 73503–5100
Landholding Agency: Army
Property Number: 219540020
Status: Excess
Comment: 3135 sq. ft., 1 story, wood frame, possible/asbestos/lead paint, off-site removal only, most recent use—vehicle maintenance shop.

Bldg. T–2646, Fort Sill
2646 Tacy Street
Lawton Co: Comanche OK 73503–5100
Landholding Agency: Army
Property Number: 219540021
Status: Excess
Comment: 3213 sq. ft., 1 story wood frame, possible asbestos/lead paint, off-site removal only, most recent use—vehicle maintenance shop.

Bldg. T–2648, Fort Sill
2648 Tacy Street
Lawton Co: Comanche OK 73503–5100
Landholding Agency: Army
Property Number: 219540022
Status: Excess
Comment: 9407 sq. ft., 1 story wood frame, possible asbestos/lead paint, off-site removal only, most recent use—general purpose warehouse.

Bldg. T–3150, Fort Sill
3150 Hoskins Road
Lawton Co: Comanche OK 73503–5100
Landholding Agency: Army
Property Number: 219540023
Status: Excess
Comment: 9359 sq. ft., 1 story wood frame, possible asbestos/lead paint, off-site removal only, most recent use—warehouse.

Bldg. T–2649, Fort Sill
2649 Tacy Street
Lawton Co: Comanche OK 73503–5100
Landholding Agency: Army
Property Number: 219540024
Status: Excess
Comment: 9374 sq. ft., 1 story wood frame, possible asbestos/lead paint, off-site removal only, most recent use—general storehouse.

Bldg. T–3727, Fort Sill
3727 Webster Street
Lawton Co: Comanche OK 73503–5100
Landholding Agency: Army
Property Number: 219540026
Status: Excess
Comment: 4524 sq. ft., 2 story wood frame, possible asbestos/lead paint, off-site removal only, most recent use—enlisted barracks.

Bldg. T–2940, Fort Sill
2940 Currie Road
Lawton Co: Comanche OK 73503–5100
Landholding Agency: Army
Property Number: 219540033
Status: Excess
Comment: 4397 sq. ft., 1 story wood frame, possible asbestos/lead paint, off-site removal only, most recent use—recreation building.

Bldg. T–4036, Fort Sill
4036 Currie Road
Lawton Co: Comanche OK 73503–5100
Landholding Agency: Army
Property Number: 219540034
Status: Excess
Comment: 4532 sq. ft., 1 story wood frame, possible asbestos/lead paint, off-site removal only, most recent use—classroom.

Bldg. T–5043, Fort Sill
5043 Coune Road
Lawton Co: Comanche OK 73503–5100
Landholding Agency: Army
Property Number: 219540035
Status: Excess
Comment: 1563 sq. ft., 1 story wood frame, possible asbestos/lead paint, off-site removal only, most recent use—PX Branch.

Bldg. T–5050, Fort Sill
5050 Rumple Road
Lawton Co: Comanche OK 73503–5100
Landholding Agency: Army
Property Number: 219540036

Status: Excess
Comment: 2470 sq. ft., 1 story wood frame, possible asbestos/lead paint, off-site removal only, most recent use—PX Branch.

Bldg. T–241, Fort Sill
Lawton Co: Comanche OK 73503–
Landholding Agency: Army
Property Number: 219610731
Status: Unutilized
Comment: 2400 sq. ft., possible asbestos, most recent use—barracks, off-site use only.

Bldg. T–297, Fort Sill
Lawton Co: Comanche OK 73503–
Landholding Agency: Army
Property Number: 219610732
Status: Unutilized
Comment: 2427 sq. ft., possible asbestos, most recent use—classroom, off-site use only.

Bldg. T–4008, Fort Sill
Lawton Co: Comanche OK 73503–
Landholding Agency: Army
Property Number: 219610733
Status: Unutilized
Comment: 2750 sq. ft., possible asbestos, most recent use—office, off-site use only.

Bldg. T–4467, Fort Sill
Lawton Co: Comanche OK 73503–
Landholding Agency: Army
Property Number: 219610734
Status: Unutilized
Comment: 3069 sq. ft., possible asbestos, most recent use—mess hall, off-site use only.

Bldg. T–4458, Fort Sill
Lawton Co: Comanche OK 73503–
Landholding Agency: Army
Property Number: 219610735
Status: Unutilized
Comment: 2964 sq. ft., needs repair, possible asbestos, most recent use—mess hall, off-site use only.

Bldg. T–367, Fort Sill
Lawton Co: Comanche OK 73503–
Landholding Agency: Army
Property Number: 219610736
Status: Unutilized
Comment: 9370 sq. ft., possible asbestos, most recent use—storage, off-site use only.

Bldg. T–1955, Fort Sill
Lawton Co: Comanche OK 73503–
Landholding Agency: Army
Property Number: 219610737
Status: Unutilized
Comment: 12810 sq. ft., possible asbestos, most recent use—storage, off-site use only.

Bldg. T–2179, Fort Sill
Lawton Co: Comanche OK 73503–
Landholding Agency: Army
Property Number: 219610738
Status: Unutilized
Comment: 18775 sq. ft., possible asbestos, most recent use—storage, off-site use only.

Bldg. T–5604, Fort Sill
Lawton Co: Comanche OK 73503–
Landholding Agency: Army
Property Number: 219610739
Status: Unutilized
Comment: 9190 sq. ft., possible asbestos, most recent use—storage, off-site use only.

Bldg. P–366, Fort Sill
Lawton Co: Comanche OK 73503–
Landholding Agency: Army
Property Number: 219610740
Status: Unutilized
Comment: 482 sq. ft., possible asbestos, most recent use—storage, off-site use only.

Bldg. P–5237, Fort Sill
Lawton Co: Comanche OK 73503–
Landholding Agency: Army
Property Number: 219610741
Status: Unutilized
Comment: 87 sq. ft., possible asbestos, most recent use—storage, off-site use only.

Bldg. P–2787, Fort Sill
Lawton Co: Comanche OK 73503–
Landholding Agency: Army
Property Number: 219610742
Status: Unutilized
Comment: 200 sq. ft., possible asbestos, most recent use—transformer bldg., off-site use only.

Bldg. P–2785, Fort Sill
Lawton Co: Comanche OK 73503–
Landholding Agency: Army
Property Number: 219610743
Status: Unutilized
Comment: 196 sq. ft., possible asbestos, most recent use—transformer bldg., off-site use only.

Bldg. P–1198, Fort Sill
Lawton Co: Comanche OK 73503–
Landholding Agency: Army
Property Number: 219610744
Status: Unutilized
Comment: 256 sq. ft., possible asbestos, most recent use—water pumping station, off-site use only.

Bldg. T–4721
Fort Sill
Lawton Co: Comanche OK 73503–
Landholding Agency: Army
Property Number: 219620688
Status: Unutilized
Comment: 114 sq. ft., most recent use—storehosue, possible asbestos/lead paint, off-site use only.

Bldg. T–4430
Fort Sill
Lawton Co: Comanche OK 73503–
Landholding Agency: Army
Property Number: 219620689
Status: Unutilized
Comment: 2974 sq. ft., most recent use—warehouse, possible asbestos/lead paint, off-site use only.

Bldg. T–4428
Fort Sill
Lawton Co: Comanche OK 73503–
Landholding Agency: Army
Property Number: 219620690
Status: Unutilized
Comment: 2974 sq. ft., most recent use—storage/dining, possible asbestos/lead paint, off-site use only.

Bldg. T–4400
Fort Sill
Lawton Co: Comanche OK 73503–
Landholding Agency: Army
Property Number: 219620691
Status: Unutilized
Comment: 2974 sq. ft., most recent use—storage, possible asbestos/lead paint, off-site use only.

Bldg. T–4115
Fort Sill
Lawton Co: Comanche OK 73503–
Landholding Agency: Army
Property Number: 219620692
Status: Unutilized
Comment: 96 sq. ft., most recent use—shelter, possible asbestos/lead paint, off-site use only.

Bldg. T–3326
Fort Sill
Lawton Co: Comanche OK 73503–
Landholding Agency: Army
Property Number: 219620693
Status: Unutilized
Comment: 8892 sq. ft., most recent use—storage, possible asbestos/lead paint, off-site use only.

Bldg. T–3290
Fort Sill
Lawton Co: Comanche OK 73503–
Landholding Agency: Army
Property Number: 219620694
Status: Unutilized
Comment: 96 sq. ft., most recent use—shelter, possible asbestos/lead paint, off-site use only.

Bldg. T–2955
Fort Sill
Lawton Co: Comanche OK 73503–
Landholding Agency: Army
Property Number: 219620695
Status: Unutilized
Comment: 3660 sq. ft., most recent use—shelter, possible asbestos/lead paint, off-site use only.

Bldg. T–2917
Fort Sill
Lawton Co: Comanche OK 73503–
Landholding Agency: Army
Property Number: 219620696
Status: Unutilized
Comment: 3746 sq. ft., most recent use—exchange svc outlet, possible asbestos/lead paint, off-site use only.

Bldg. T–2450
Fort Sill
Lawton Co: Comanche OK 73503–
Landholding Agency: Army
Property Number: 219620697
Status: Unutilized
Comment: 1173 sq. ft., most recent use—storage, possible asbestos/lead paint, off-site use only.

Bldg. T–2438
Fort Sill
Lawton Co: Comanche OK 73503–
Landholding Agency: Army
Property Number: 219620698
Status: Unutilized
Comment: 9002 sq. ft., most recent use—storage/office, possible asbestos/lead paint, off-site use only.

Bldg. T–2425
Fort Sill
Lawton Co: Comanche OK 73503–
Landholding Agency: Army
Property Number: 219620699
Status: Unutilized
Comment: 9052 sq. ft., most recent use—storehouse, possible asbestos/lead paint, off-site use only.

Bldg. S–2242
Fort Sill
Lawton Co: Comanche OK 73503–
Landholding Agency: Army
Property Number: 219620700

Status: Unutilized
Comment: 348 sq. ft., most recent use—shower, possible asbestos/lead paint, off-site use only.

Bldg. P–2093
Fort Sill
Lawton Co: Comanche OK 73503–
Landholding Agency: Army
Property Number: 219620701
Status: Unutilized
Comment: 106 sq. ft., most recent use—transformer bldg., possible asbestos/lead paint, off-site use only.

Bldg. P–2092
Fort Sill
Lawton Co: Comanche OK 73503–
Landholding Agency: Army
Property Number: 219620702
Status: Unutilized
Comment: 131 sq. ft., most recent use—storage, possible asbestos/lead paint, off-site use only.

Bldg. P–2091
Fort Sill
Lawton Co: Comanche OK 73503–
Landholding Agency: Army
Property Number: 219620703
Status: Unutilized
Comment: 106 sq. ft., most recent use—transformer bldg, possible asbestos/lead paint, off-site use only.

Bldg. T–1951
Fort Sill
Lawton Co: Comanche OK 73503–
Landholding Agency: Army
Property Number: 219620704
Status: Unutilized
Comment: 402 sq. ft., most recent use—storage shed, possible asbestos/lead paint, off-site use only.

Bldg. T–1943
Fort Sill
Lawton Co: Comanche OK 73503–
Landholding Agency: Army
Property Number: 219620705
Status: Unutilized
Comment: 1439 sq. ft., most recent use—office/shop, possible asbestos/lead paint, off-site use only.

Bldg. T–1710
Fort Sill
Lawton Co: Comanche OK 73503–
Landholding Agency: Army
Property Number: 219620706
Status: Unutilized
Comment: 7668 sq. ft., most recent use—warehouse, possible asbestos/lead paint, off-site use only.

Bldg. P–1700
Fort Sill
Lawton Co: Comanche OK 73503–
Landholding Agency: Army
Property Number: 219620707
Status: Unutilized
Comment: 7574 sq. ft., most recent use—maint. shop/office, possible asbestos/lead paint, off-site use only.

Bldg. T–1610
Fort Sill
Lawton Co: Comanche OK 73503–
Landholding Agency: Army
Property Number: 219620708
Status: Unutilized
Comment: 96 sq. ft., most recent use—shelter, possible asbestos/lead paint, off-site use only.

Bldg. T–1002
Fort Sill
Lawton Co: Comanche OK 73503–
Landholding Agency: Army
Property Number: 219620709
Status: Unutilized
Comment: 264 sq. ft., most recent use—shelter, possible asbestos/lead paint, off-site use only.

Bldg. P–594
Fort Sill
Lawton Co: Comanche OK 73503–
Landholding Agency: Army
Property Number: 219620710
Status: Unutilized
Comment: 106 sq. ft., most recent use—transformer bldg., possible asbestos/lead paint, off-site use only.

Bldg. P–586
Fort Sill
Lawton Co: Comanche OK 73503–
Landholding Agency: Army
Property Number: 219620711
Status: Unutilized
Comment: 106 sq. ft., most recent use—transformer bldg., possible asbestos/lead paint, off-site use only.

Bldg. T–299
Fort Sill
Lawton Co: Comanche OK 73503–
Landholding Agency: Army
Property Number: 219620712
Status: Unutilized
Comment: 2974 sq. ft., most recent use—classroom, possible asbestos/lead paint off-site use only.

Bldg. T–271
Fort Sill
Lawton Co: Comanche OK 73503–
Landholding Agency: Army
Property Number: 219620713
Status: Unutilized
Comment: 283 sq. ft., most recent use—storage, possible asbestos/lead paint, off-site use only.

Bldg. T–298
Fort Sill
Lawton Co: Comanche OK 73503–
Landholding Agency: Army
Property Number: 219620714
Status: Unutilized
Comment: 2432 sq. ft., most recent use—classroom, possible asbestos/lead paint, off-site use only.

P–9001
U.S. Army Reserve Center
Guymon Co: Texas OK 73942–0906
Landholding Agency: Army
Property Number: 219630008
Status: Unutilized
Comment: 13400 sq. ft. bldg. on 4 acres w/parking, roads, and utility distribution systems, presence of lead, land reverts back to City.

South Carolina

Bldg. 5492
Fort Jackson
Fort Jackson Co: Richland SC 29207–
Landholding Agency: Army
Property Number: 219410207
Status: Unutilized
Comment: 2379 sq. ft.; wood frame; 1 story; off-site use only; utilities upgrade; most recent use—information management office.

Bldg. 5412
Fort Jackson
Fort Jackson Co: Richland SC 29207–
Landholding Agency: Army
Property Number: 219510139
Status: Excess
Comment: 3900 sq. ft., 1-story, wood frame, needs rehab, most recent use—admin., off-site use only.

Bldg. 9606, Fort Jackson
Fort Jackson Co: Richland SC 29207–
Landholding Agency: Army
Property Number: 219510168
Status: Unutilized
Comment: 1144 sq. ft., 1-story, wood frame, needs rehab, most recent use—criminal investigation bldg., off-site use only.

Bldg. 10–740, Fort Jackson
Fort Jackson Co: Richland SC 29207–
Landholding Agency: Army
Property Number: 219510191
Status: Unutilized
Comment: 2257 sq. ft., 2-story, wood frame, needs rehab, most recent use—enlisted billets, off-site use only.

Bldg. 10–768, Fort Jackson
Fort Jackson Co: Richland SC 29207–
Landholding Agency: Army
Property Number: 219510206
Status: Unutilized
Comment: 4800 sq. ft., 2-story, wood frame, needs rehab, most recent use—enlisted billets, off-site use only.

Bldg. 4510
Fort Jackson
Ft. Jackson Co: Richland SC 29207–
Landholding Agency: Army
Property Number: 219620715
Status: Unutilized
Comment: 10424 sq. ft., needs repair, most recent use—craft shop, off-site use only.

Bldg. 6528
Fort Jackson
Ft. Jackson Co: Richland SC 29207–
Landholding Agency: Army
Property Number: 219620716
Status: Unutilized
Comment: 3960 sq. ft., needs repair, most recent use—office, off-site use only.

Bldg. 6529
Fort Jackson
Ft. Jackson Co: Richland SC 29207–
Landholding Agency: Army
Property Number: 219620717
Status: Unutilized
Comment: 3960 sq. ft., needs repair, most recent use—office, off-site use only.

Bldg. 6530
Fort Jackson
Ft. Jackson Co: Richland SC 29207–
Landholding Agency: Army
Property Number: 219620718
Status: Unutilized
Comment: 3960 sq. ft., needs repair, most recent use—office, off-site use only.

Texas

Harlingen USARC
1920 East Washington
Harlingen Co: Cameron TX 78550–
Landholding Agency: Army

Property Number: 219120304
Status: Excess
Comment: 19440 sq. ft., 1 story brick, needs rehab, with approx. 6 acres including parking areas, most recent use—Army Reserve Training Center.

Bldg. P–3824, Fort Sam Houston
San Antonio Co: Bexar TX 78234–5000
Landholding Agency: Army
Property Number: 219220398
Status: Unutilized
Comment: 2232 sq. ft., 1-story concrete structure, within National Landmark Historic District, off-site removal only.

Bldg. 440, Fort Bliss
El Paso Co: El Paso TX 79916–
Landholding Agency: Army
Property Number:219320355
Status: Unutilized
Comment: 1651 sq. ft., 1-story brick, most recent use—education facility, off-site use only.

Bldg. P–377, Fort Sam Houston
San Antonio Co: Bexar TX 78234–5000
Landholding Agency: Army
Property Number: 219330444
Status: Unutilized
Comment: 74 sq. ft., 1-story brick, needs rehab, most recent use—scale house, located in National Historic District, off-site use only.

Bldg. T–1492
Fort Sam Houston
San Antonio Co: Bexar TX 78234–5000
Landholding Agency: Army
Property Number: 219330483
Status: Unutilized
Comment: 2284 sq. ft., 1-story wood frame, needs rehab, most recent use—admin., off-site use only.

Bldg. T–5901
Fort Sam Houston
San Antonio Co: Bexar TX 78234–5000
Landholding Agency: Army
Property Number: 219330486
Status: Unutilized
Comment: 742 sq. ft., 1-story wood frame, most recent use—admin., off-site use only.

Bldg. T–1874
Fort Sam Houston
San Antonio Co: Bexar TX 78234–5000
Landholding Agency: Army
Property Number: 219330488
Status: Unutilized
Comment: 3108 sq. ft., 1-story wood frame, needs rehab, off-site use only.

Bldg. 315, Fort Hood
Ft. Hood Co: Bell TX 76544–
Landholding Agency: Army
Property Number: 219410315
Status: Unutilized
Comment: 2400 sq. ft., 1-story, needs rehab, most recent use—storage, off-site use only.

Bldg. 316, Fort Hood
Ft. Hood Co: Bell TX 76544–
Landholding Agency: Army
Property Number: 219410316
Status: Unutilized
Comment: 1500 sq. ft., 1-story, needs rehab, most recent use—storage, off-site use only.

Bldg. 317, Fort Hood
Ft. Hood Co: Bell TX 76544–
Landholding Agency: Army
Property Number: 219410317
Status: Unutilized
Comment: 2000 sq. ft., 1-story, needs rehab, most recent use—storage, off-site use only.

Bldg. 4480, Fort Hood
Ft. Hood Co: Bell TX 76544–
Landholding Agency: Army
Property Number: 219410322
Status: Unutilized
Comment: 2160 sq. ft., 1-story, most recent use—storage, off-site use only.

Bldg. 1165, Fort Bliss
El Paso Co: El Paso TX 79916–
Landholding Agency: Army
Property Number: 219420456
Status: Unutilized
Comment: 5263 sq. ft., 1-story wood, needs repair, most recent use—office, off-site use only.

Bldg. 4718, Fort Bliss
El Paso Co: El Paso TX 79916–
Landholding Agency: Army
Property Number: 219420459
Status: Unutilized
Comment: 899 sq. ft., 1-story wood, needs repair, most recent use—storage, off-site use only.

Bldg. 4719, Fort Bliss
El Paso Co: El Paso TX 79916–
Landholding Agency: Army
Property Number: 219420460
Status: Unutilized
Comment: 519 sq. ft., 1-story wood, needs repair, most recent use—storage, off-site use only.

Bldg. 4105, Fort Hood
Ft. Hood Co: Coryell TX 76544–
Landholding Agency: Army
Property Number: 219420463
Status: Unutilized
Comment: 2535 sq. ft., 1-story, needs rehab, most recent use—storage, off-site use only.

Bldg. 1, Fort Hood
Lubbock Co: Lubbock TX 79408–
Landholding Agency: Army
Property Number: 219440336
Status: Unutilized
Comment: 11440 sq. ft., 1-story, fair condition, to be vacated 6/30/95, off-site removal only, most recent use—army reserve center.

Bldg. 2, Fort Hood
Lubbock Co: Lubbock TX 79408–
Landholding Agency: Army
Property Number: 219440337
Status: Unutilized
Comment: 2818 sq. ft., 1-story, fair condition, to be vacated 6/30/95, off-site removal only, most recent use—army reserve center maintenance shop.

Bldg. P–452
Fort Sam Houston
San Antonio Co: Bexar TX 78234–5000
Landholding Agency: Army
Property Number: 219440449
Status: Excess
Comment: 600 sq. ft., 1 story stucco frame, lead paint, off-site removal only, most recent use—bath house.

Bldg. P–6615
Fort Sam Houston
San Antonio Co: Bexar TX 78234–5000
Landholding Agency: Army
Property Number: 219440454
Status: Excess
Comment: 400 sq. ft., 1 story concrete frame, off-site removal only, most recent use—detached garage.

Bldg. T–300, Fort Sam Houston
San Antonio Co: Bexar TX 78234–5000
Landholding Agency: Army
Property Number: 219520118
Status: Unutilized
Comment: 8352 gr. sq. ft., 1-story, presence of lead base paint and asbestos, most recent use—admin., off-site use only.

Bldg. P–1059, Fort Sam Houston
San Antonio Co: Bexar TX 78234–5000
Landholding Agency: Army
Property Number: 219520121
Status: Unutilized
Comment: 700 gr. sq. ft., presence of lead base paint and asbestos, most recent use—admin., off-site use only.

Bldg. 307, Fort Hood
Ft. Hood Co: Bell TX 76544–
Landholding Agency: Army
Property Number: 219520198
Status: Excess
Comment: 1600 sq. ft., 1-story, most recent use—med. clinic, off-site use only.

Bldg. 507, Fort Hood
Ft. Hood Co: Bell TX 76544–
Landholding Agency: Army
Property Number: 219520199
Status: Unutilized
Comment: 1600 sq. ft., 1-story, presence of asbestos, off-site use only.

Bldg. 831, Fort Hood
Ft. Hood Co: Bell TX 76544–
Landholding Agency: Army
Property Number: 219520200
Status: Unutilized
Comment: 4780 sq. ft., 2-story, most recent use—training, needs rehab, off-site use only.

Bldg. 4201, Fort Hood
Ft. Hood Co: Bell TX 76544–
Landholding Agency: Army
Property Number: 219520201
Status: Unutilized
Comment: 9000 sq. ft., 1-story, off-site use only.

Bldg. 4202, Fort Hood
Ft. Hood Co: Bell TX 76544–
Landholding Agency: Army
Property Number: 219520202
Status: Unutilized
Comment: 5400 sq. ft., 1-story, most recent use—storage, off-site use only.

Bldg. P–1030
Fort Sam Houston
San Antonio Co: Bexar TX 78234–5000
Landholding Agency: Army
Property Number: 219520203
Status: Excess
Comment: 8212 sq. ft., 1-story, most recent use—storage, presence of asbestos & lead base paint, located in Historic District, off-site use only.

Bldg. T–2289
Fort Sam Houston
San Antonio Co: Bexar TX 78234–5000
Landholding Agency: Army
Property Number: 219520207
Status: Excess
Comment: 4720 sq. ft., 2-story, most recent use—training facility, needs rehab, presence of asbestos & lead base paint,

located in Historic District, off-site use only.

Bldg. 832, Fort Hood
Ft. Hood Co: Bell TX 76544–
Landholding Agency: Army
Property Number: 219540068
Status: Excess
Comment: 3983 sq. ft., 2-story, off-site removal only, most recent use—admin.

Land, Fort Hood
Ft. Hood Co: Bell TX 76544–
Landholding Agency: Army
Property Number: 219540069
Status: Excess
Comment: 4.808 acres of unimproved land, potential utilities.

Bldg. 56514
Fort Hood
Ft. Hood Co: Coryell TX 76544–
Landholding Agency: Army
Property Number: 219610745
Status: Unutilized
Comment: 500 sq. ft., most recent use—dining, off-site use only.

Bldgs. 56642–56645
Fort Hood
Ft. Hood Co: Coryell TX 76544–
Landholding Agency: Army
Property Number: 219610746
Status: Unutilized
Comment: 500 sq. ft., most recent use—dining, off-site use only.

Bldg. 56649
Fort Hood
Ft. Hood Co: Coryell TX 76544–
Landholding Agency: Army
Property Number: 219610747
Status: Unutilized
Comment: 506.7 sq. ft., most recent use—dining, off-site use only.

Bldgs. 56722–56725
Fort Hood
Ft. Hood Co: Coryell TX 76544–
Landholding Agency: Army
Property Number: 219610748
Status: Unutilized
Comment: 500 sq. ft. each, most recent use—dining, off-site use only.

Bldg. 56729
Fort Hood
Ft. Hood Co: Coryell TX 76544–
Landholding Agency: Army
Property Number: 219610749
Status: Unutilized
Comment: 506.7 sq. ft., most recent use—dining, off-site use only.

Bldgs. 56732–56735
Fort Hood
Ft. Hood Co: Coryell TX 76544–
Landholding Agency: Army
Property Number: 219610750
Status: Unutilized
Comment: 500 sq. ft. each, most recent use—dining, off-site use only.

Bldg. 56739
Fort Hood
Ft. Hood Co: Coryell TX 76544–
Landholding Agency: Army
Property Number: 219610751
Status: Unutilized
Comment: 506.7 sq. ft., most recent use—dining, off-site use only.

Bldgs. 56742–56745
Fort Hood
Ft. Hood Co: Coryell TX 76544–
Landholding Agency: Army
Property Number: 219610752
Status: Unutilized
Comment: 500 sq. ft. each, most recent use—dining, off-site use only.

Bldg. 56749
Fort Hood
Ft. Hood Co: Coryell TX 76544–
Landholding Agency: Army
Property Number: 219610753
Status: Unutilized
Comment: 506.7 sq. ft., most recent use—dining, off-site only.

Bldg. 439
Fort Hood
Ft. Hood Co: Coryell TX 76544–
Landholding Agency: Army
Property Number: 219610754
Status: Unutilized
Comment: 3983 sq. ft., needs rehab, most recent use—admin., off-site use only.

Bldgs. 2028–2034, 2038
Fort Hood
Ft. Hood Co: Coryell TX 76544–
Landholding Agency: Army
Property Number: 219610756
Status: Unutilized
Comment: 4508 sq. ft. each, needs rehab, most recent use—vehicle maint. shop, off-site use only.

Bldg. 2046
Fort Hood
Ft. Hood Co: Coryell TX 76544–
Landholding Agency: Army
Property Number: 219610757
Status: Unutilized
Comment: 2700 sq. ft., needs rehab, most recent use—storage, off-site use only.

Bldg. 4276A
Fort Hood
Ft. Hood Co: Coryell TX 76544–
Landholding Agency: Army
Property Number: 219610758
Status: Unutilized
Comment: 40 sq. ft., needs rehab, most recent use—storage, off-site use only.

Bldg. 57020
Fort Hood
Ft. Hood Co: Coryell TX 76544–
Landholding Agency: Army
Property Number: 219610760
Status: Unutilized
Comment: 33792 sq. ft., needs rehab, most recent use—storage, off-site use only.

Bldg. 4221
Fort Hood
Ft. Hood Co: Coryell TX 76544–
Landholding Agency: Army
Property Number: 219610762
Status: Unutilized
Comment: 44096 sq. ft., needs rehab, most recent use—laundry, off-site use only.

Bldg. 4276
Fort Hood
Ft. Hood Co: Coryell TX 76544–
Landholding Agency: Army
Property Number: 219610765
Status: Unutilized
Comment: 3772 sq. ft., most recent use—heat plant, off-site use only.

Bldg. 2035
Fort Hood
Ft. Hood Co: Coryell TX 76544–
Landholding Agency: Army
Property Number: 219610766
Status: Unutilized
Comment: 336 sq, ft., needs rehab, most recent use—dispatch bldg., off-site use only.

Bldg. 2036
Fort Hood
Ft. Hood Co: Coryell TX 76544–
Landholding Agency: Army
Property Number: 219610767
Status: Unutilized
Comment: 1350 sq. ft., needs rehab, most recent use—repair shop, off-site use only.

Bldgs. 56738, 56647
Fort Hood
Ft. Hood Co: Coryell TX 76544–
Landholding Agency: Army
Property Number: 219610768
Status: Unutilized
Comment: Needs rehab, off-site use only.

Bldg. P–8224B
Fort Sam Houston Co: Bexar TX 78234–5000
Landholding Agency: Army
Property Number: 219610783
Status: Underutilized
Comment: 1126 gross sq. ft., needs rehab, presence of lead base paint, most recent use—family housing.

5 Bldgs., Family Quarters
Hayes Housing Complex, Fort Bliss
El Paso Co: El Paso TX 79916–
Location: 2126A/B, 2148A/B, 2218A/B, 2230A/B, 2245A/B
Landholding Agency: Army
Property Number: 219620233
Status: Unutilized
Comment: 769 sq. ft., needs rehab, possible asbestos/lead paint, off-site use only.

12 Bldgs., Family Quarters
Hayes Housing Complex, Fort Bliss
El Paso Co: El Paso TX 79916–
Location: 2106A/B, 2144A/B, 2156A/B, 2164A/B, 2172A/B, 2194A/B, 2220A/B, 2228A/B, 2234A/B, 2239A/B, 2244A/B, 2214A/B
Landholding Agency: Army
Property Number: 219620234
Status: Unutilized
Comment: 916 sq. ft., needs rehab, possible asbestos/lead paint, off-site use only.

11 Bldgs., Family Quarters
Hayes Housing Complex, Fort Bliss
El Paso Co: El Paso TX 79916–
Location: 2105A/B, 2127A/B, 2137A/B, 2191A/B, 2205A/B, 2206A/B, 2216A/B, 2219A/B, 2231A/B, 2241A/B, 2250A/B
Landholding Agency: Army
Property Number: 219620235
Status: Unutilized
Comment: 896 sq. ft., needs rehab, possible asbestos/lead paint, off-site use only.

17 Bldgs., Family Quarters
Hayes Housing Complex, Fort Bliss
El Paso Co: El Paso TX 79916–
Location: 2129A/B, 2147A/B, 2150A/B, 2153A/B, 2158A/B, 2161A/B, 2167A/B, 2173A/B, 2179A/B, 2183A/B, 2186A/B, 2193A/B, 2209A/B, 2217A/B, 2227A/B, 2237A/B, 2249A/B
Landholding Agency: Army
Property Number: 219620236
Status: Unutilized
Comment: 911 sq. ft., needs rehab, possible asbestos/lead paint, off-site use only.

35 Bldgs., Family Quarters
Hayes Housing Complex, Fort Bliss
El Paso Co: El Paso TX 79916–
Location: 2108, 2109, 2111, 2113, 2119, 2124, 2128, 2134, 2140, 2142, 2145, 2151, 2162, 2163, 2168, 2171, 2174, 2176, 2182, 2184, 2188, 2192, 2195, 2202, 2203, 2212, 2223, 2224, 2226, 2232, 2238, 2242, 2246, 2132, 2152
Landholding Agency: Army
Property Number: 219620237
Status: Unutilized
Comment: 913 sq. ft., needs rehab, possible asbestos/lead paint, off-site use only.

Bldg. P–1
Bay City Memorial Reserve Center
Bay City Co: Matagorda TX 77414–3813
Landholding Agency: Army
Property Number: 219620719
Status: Unutilized
Comment: 4408 sq. ft., possible asbestos/lead paint, possible lease restrictions, most recent use—reserve center.

Bldg. P–3
Bay City Memorial Reserve Center
Bay City Co: Matagorda TX 77414–3813
Landholding Agency: Army
Property Number: 219620720
Status: Unutilized
Comment: 1798 sq. ft., possible asbestos/lead paint, possible lease restrictions, most recent use—vehicle maint. shop.

Bldg. P–5
Bay City Memorial Reserve Center
Bay City Co: Matagorda TX 77414–3813
Landholding Agency: Army
Property Number: 219620721
Status: Unutilized
Comment: 56 sq. ft., possible asbestos/lead paint, possible lease restrictions, most recent use—shed.

Bldg. 57015
Fort Hood
Ft Hood Co: Coryell TX 76544–
Landholding Agency: Army
Property Number: 219620722
Status: Unutilized
Comment: 7680 sq. ft., needs rehab, most recent use—storage, off-site use only.

Bldg. 57016
Fort Hood
Ft Hood Co: Coryell TX 76544–
Landholding Agency: Army
Property Number: 219620723
Status: Unutilized
Comment: 7680 sq. ft., needs rehab, most recent use—storage, off-site use only.

Bldg. 53
Fort Hood
Ft Hood Co: Coryell TX 76544–
Landholding Agency: Army
Property Number: 219620724
Status: Unutilized
Comment: 3746 sq. ft., most recent use—chapel, off-site use only.

Bldg. 2808
Fort Hood
Ft Hood Co: Coryell TX 76544–
Landholding Agency: Army
Property Number: 219620725
Status: Unutilized
Comment: 3746 sq. ft., most recent use—chapel, off-site use only.

Bldg. S–655
Fort Sam Houston
San Antonio Co: Bexar TX 78234–5000
Landholding Agency: Army
Property Number: 219620728
Status: Unutilized
Comment: 3296 sq. ft., presence of asbestos/lead paint, most recent use—storage, possible National Historic Pres. Act requirements.

Bldg. 2202
Fort Sam Houston
San Antonio Co: Bexar TX 78234–5000
Landholding Agency: Army
Property Number: 219620741
Status: Unutilized
Comment: 3525 sq. ft., needs rehab, most recent use—chapel.

9 Bldgs., Family Quarters
Hayes Housing Complex, Fort Bliss
El Paso Co: El Paso TX 79916—
Location: 2125A/B, 2135A/B, 2159A/B, 2175A/B, 2197A/B, 2201A/B, 2213A/B 2221A/B, 2243A/B
Landholding Agency: Army
Property Number: 219620742
Status: Unutilized
Comment: 903 sq. ft. each, needs rehab, most recent use—family quarters, presence of asbestos/lead paint, off-site use only.

14 Bldgs., Family Quarters
Hayes Housing Complex, Fort Bliss
El Paso Co: El Paso TX 79916—
Location: 2120A/B, 2121A/B, 2131A/B, 2157A/B, 2166A/B, 2177A/B, 2185A/B, 2200A/B, 2210A/B, 2211A/B, 2229A/B, 2235A/B, 2240A/B, 2247A/B
Landholding Agency: Army
Property Number: 219620743
Status: Unutilized
Comment: 899 sq. ft. each, needs rehab, most recent use—family quarters, presence of asbestos/lead paint, off-site use only.

35 Bldgs., Family Quarters
Hayes Housing Complex, Fort Bliss
El Paso Co: El Paso TX 79916—
Location: 2107, 2110, 2112, 2114, 2122, 2123, 2130, 2133, 2136, 2138, 2146, 2149, 2154, 2155, 2165, 2169, 2170, 2178, 2180, 2181, 2187, 2189, 2190, 2196, 2198, 2204, 2207, 2208, 2215, 2222, 2225, 2233, 2236, 2248, 2251—A/B
Landholding Agency: Army
Property Number: 219620744
Status: Unutilized
Comment: 776 sq. ft. each, needs rehab, most recent use—family quarters, presence of asbestos/lead paint, off-site use only.

Virginia

Bldg. T303
Fort Picket
W. 33rd Street
Blackstone Co: Nottoway VA 23824–
Landholding Agency: Army
Property Number: 219440446
Status: Underutilized
Comment: 1750 sq. ft., 1 story wood frame, most recent use—confinement facility, need repairs.

Bldg. T2800
Fort Picket
Off Armistead Road
Blackstone Co: Nottoway VA 23824–
Landholding Agency: Army
Property Number: 219440447
Status: Underutilized
Comment: 2056 sq. ft., 1 story wood frame, most recent use—clinic, need repairs.

Bldg. T2857
Fort Picket
Off Armistead Road
Blackstone Co: Nottoway VA 23824–
Landholding Agency: Army
Property Number: 219440448
Status: Underutilized
Comment: 2987 sq. ft., 1 story wood frame, most recent use—admin.

Bldg. TT0104
Fort A.P. Hill
Bowling Green Co: Caroline VA 22427–5000
Landholding Agency: Army
Property Number: 219520217
Status: Unutilized
Comment: 1464 sq. ft., 1-story most recent use—training, needs rehab, off-site use only.

Bldg. TT0105
Fort A.P. Hill
Bowling Green Co: Caroline VA 22427–5000
Landholding Agency: Army
Property Number: 219520218
Status: Unutilized
Comment: 2273 sq. ft., 1-story, most recent use—storage, off-site use only.

Bldg. T00103
Fort A.P. Hill
Bowling Green Co: Caroline VA 22427–5000
Landholding Agency: Army
Property Number: 219610789
Status: Unutilized
Comment: 430 sq. ft., presence of asbestos, most recent use—barber shop, off-site use only.

Bldg. 602, Fort Eustis
Ft. Eustis VA 23604
Landholding Agency: Army
Property Number: 219620729
Status: Unutilized
Comment: 2368 sq. ft., 1-story brick, most recent use—storage, presence of asbestos, off-site use only.

Bldg. 74
Fort Monroe
Ft. Monroe VA 23651–
Landholding Agency: Army
Property Number: 219620730
Status: Unutilized
Comment: 284 sq. ft., needs repair, most recent use—storage, off-site use only.

Bldg. 75
Fort Monroe
Ft. Monroe VA 23651–
Landholding Agency: Army
Property Number: 219620731
Status: Unutilized
Comment: 171 sq. ft., needs repair, most recent use—storage, off-site use only.

Bldg. T–99
Fort Monroe
Ft. Monroe VA 23651–
Landholding Agency: Army
Propery Number: 219620732
Status: Unutilized
Comment: 7410 sq. ft. most recent use—storage, off-site use only.

Bldg. T–193
Fort Monroe
Ft. Monroe VA 13651
Landholding Agency: Army

Property Number: 219620733
Status: Unutilized
Comment: 2415 sq. ft., most recent use—training, off-site use only.

Bldg. T–194
Fort Monroe
Ft. Monroe VA 23651–
Landholding Agency: Army
Property Number: 219620734
Status: Unutilized
Comment: 1950 sq. ft., most recent use—office, off-site use only.

Bldg. T–195
Fort Monroe
Ft. Monroe VA 23651–
Landholding Agency: Army
Property Number: 219620735
Status: Unutilized
Comment: 1830 sq. ft., most recent use—office, off-site use only.

Bldg. T–196
Fort Monroe
Ft. Monroe VA 23651–
Landholding Agency: Army
Property Number: 219620736
Status: Unutilized
Comment: 1500 sq. ft., most recent use—office/storage, off-site use only.

Bldg. T–248
Fort Monroe
Ft. Monroe VA 23651–
Landholding Agency: Army
Property Number: 219620737
Status: Unutilized
Comment: 1894 sq. ft., most recent use—office, off-site use only.

Bldg. T–249
Fort Monroe
Ft. Monroe VA 23651–
Landholding Agency: Army
Property Number: 219620738
Status: Unutilized
Comment: 1909 sq. ft., most recent use—office, off-site use only.

Bldg. T–259
Fort Monroe
Ft. Monroe VA 23651–
Landholding Agency: Army
Property Number: 219620739
Status: Unutilized
Comment: 1983 sq. ft., most recent use—office, off-site use only.

Washington

Reserve Center, Longview
14 Port Way
Longview Co: Cowlitz WA 98632–
Landholding Agency: Army
Property Number: 219320368
Status: Unutilized
Comment: 17,034 sq. ft., 1-story training facility, scheduled to be vacated 9/93.

Wisconsin

Bldg. 7174, Fort McCoy
Ft. McCoy Co: Monroe WI 54656–
Landholding Agency: Army
Property Number: 219320372
Status: Underutilized
Comment: 8466 sq. ft., 1-story, presence of asbestos, needs rehab, used intermittently by Army, most recent use—gen. purpose warehouse.

Bldg. 7176, Fort McCoy
Ft. McCoy Co: Monroe WI 54656–
Landholding Agency: Army
Property Number: 219320373
Status: Underutilized
Comment: 5415 sq. ft., 1-story, presence of asbestos, needs rehab, used intermittently by Army, most recent use—gen. purpose warehouse.

Bldg. 7261, Fort McCoy
Ft. McCoy Co: Monroe WI 54656–
Landholding Agency: Army
Property Number: 219320374
Status: Unutilized
Comment: 4800 sq. ft., 1-story, presence of asbestos, needs rehab, used intermittently by Army, most recent use—gen. purpose warehouse.

Bldg. 2321
Fort McCoy
Ft. McCoy Co: Monroe WI 54656–
Landholding Agency: Army
Property Number: 219430225
Status: Unutilized
Comment: 682 sq. ft., 1-story, needs rehab, most recent use—heat plant.

Bldg. 2673
Fort McCoy
Ft. McCoy Co: Monroe WI 54656–
Landholding Agency: Army
Property Number: 219430226
Status: Unutilized
Comment: 13,515 sq. ft., 1-story, needs rehab, most recent use—theater.

Bldg. 2110
Fort McCoy
Ft. McCoy Co: Monroe WI 54656–
Landholding Agency: Army
Property Number: 219430232
Status: Unutilized
Comment: 18,270 sq. ft., 1-story, needs rehab, most recent use—vehicle maint.

Bldg. 2320
Fort McCoy
Ft. McCoy Co: Monroe WI 54656–
Landholding Agency: Army
Property Number: 219430233
Status: Unutilized
Comment: 33,345 sq. ft., 1-story, needs rehab, most recent use—vehicle maint.

Bldg. 2763
Fort McCoy
Ft. McCoy Co: Monroe WI 54656–
Landholding Agency: Army
Property Number: 219430236
Status: Unutilized
Comment: 3250 sq. ft., 1-story, needs rehab, most recent use—admin.

Bldg. 2755
Fort McCoy
Ft. McCoy Co: Monroe WI 54656–
Landholding Agency: Army
Property Number: 219430239
Status: Unutilized
Comment: 168 sq. ft., 1-story, needs rehab, most recent use—dispatch bldg.

Bldg. 850
Fort McCoy
Ft. McCoy Co: Monroe WI 54656–
Landholding Agency: Army
Property Number: 219430243
Status: Unutilized
Comment: 2350 sq. ft., 1-story, needs rehab, most recent use—dining facility.

Bldg. 240, Fort McCoy
Ft. McCoy Co: Monroe WI 54656–5162
Landholding Agency: Army
Property Number: 219520219
Status: Underutilized
Comment: 1750 sq. ft., 1-story, needs rehab, most recent use—admin.

U.S. Army Reserve Center
2310 Center Street
Racine Co: Racine WI 53403–3330
Landholding Agency: Army
Property Number: 219620740
Status: Unutilized
Comment: 3 bldgs. (14,137 sq. ft.) on 3 acres, needs repair, most recent use—office/storage/training.

Land (by State)

Alaska

Harding Lake Recreation Area
Fort Richardson
Anchorage AK
Landholding Agency: Army
Property Number: 219540009
Status: Underutilized
Comment: 25.5 acres, most recent use—recreation.

California

U.S. Army Reserve Center
Mountain Lakes Industrial Park
Redding Co: Shasta CA
Landholding Agency: Army
Property Number: 219610645
Status: Unutilized
Comment: 5.13 acres within a light industrial park.

Georgia

Land (Railbed)
Fort Benning
Ft. Benning Co: Muscogee GA 31905–
Landholding Agency: Army
Property Number: 219440440
Status: Unutilized
Comment: 17.3 acres extending 1.24 miles, no known utilities potential.

Minnesota

Land
Twin Cities Army Ammunition Plant
New Brighton Co: Ramsey MN 55112–
Landholding Agency: Army
Property Number: 219120269
Status: Underutilized
Comment: Approx. 25 acres, possible contamination, secured area with alternate access.

Nevada

Parcel A
Hawthorne Army Ammunition Plant
Hawthorne Co: Mineral NV 89415–
Location: At Foot of Eastern slope of Mount Grant in Wassuk Range & S.W. edge of Walker Lane
Landholding Agency: Army
Property Number: 219012049
Status: Unutilized
Comment: 160 acres, road and utility easements, no utility hookup, possible flooding problem.

Parcel B
Hawthorne Army Ammunition Plant
Hawthorne Co: Mineral NV 89415–
Location: At Foot of Eastern slope of Mount Grant in Wassuk Range & S.W. edge of Walker Lane
Landholding Agency: Army

Property Number: 219012056
Status: Unutilized
Comment: 1920 acres, road and utility easements, no utility hookup, possible flooding problem.

Parcel C
Hawthorne Army Ammunition Plant
Hawthorne Co: Mineral NV 89415–
Location: South-southwest of Hawthorne along HWAAP's South Magazine Area at Western edge of State Route 359
Landholding Agency: Army
Property Number: 219012057
Status: Unutilized
Comment: 85 acres, road & utility easements, no utility hookup.

Parcel D
Hawthorne Army Ammunition Plant
Hawthorne Co: Mineral NV 89415–
Location: South-southwest of Hawthorne along HWAAP's South Magazine Area at western edge of State Route 359
Landholding Agency: Army
Property Number: 219012058
Status: Unutilized
Comment: 955 acres, road & utility easements, no utility hookup.

New York

Land—6.965 Acres
Dix Avenue
Queensbury Co: Warren NY 12801–
Landholding Agency: Army
Property Number: 219540018
Status: Unutilized
Comment: 6.96 acres of vacant land, located in industrial area, potential utilities.

Ohio

5 acres
Doan U.S. Army Reserve Center
Portmonth Co: Scioto OH 45662–
Landholding Agency: Army
Property Number: 219320313
Status: Unutilized
Comment: 5 acres including paved roads, parking, sidewalks, etc.

Tennessee

Holston Army Ammunition Plant
Kingsport Co: Hawkins TN 61299–6000
Landholding Agency: Army
Property Number: 219012338
Status: Unutilized
Comment: 8 acres; unimproved; could provide access; 2 acres unusable; near explosives.

Texas

Vacant Land, Fort Sam Houston
All of Block 1800, Portions of Blocks 1900, 3100 and 3200
San Antonio Co: Bexar TX 78234–5000
Landholding Agency: Army
Property Number: 219220438
Status: Unutilized
Comment: 244.47 acres, 85% located in floodplain, possibility of unexploded ordnance.

Old Camp Bullis Road
Fort Sam Houston
San Antonio Co: Bexar TX 78234–5000
Landholding Agency: Army
Property Number: 219420461
Status: Unutilized
Comment: 7.16 acres, rural gravel road.

Camp Bullis, Tract 9
Fort Sam Houston
San Antonio Co: Bexar TX 78234–5000
Landholding Agency: Army
Property Number: 219420462
Status: Unutilized
Comment: 1.07 acres of undeveloped land.

Castner Range
Fort Bliss
El Paso Co: El Paso TX 79916–
Landholding Agency: Army
Property Number: 219610788
Status: Unutilized
Comment: approx. 56.81 acres, portion in floodway, most recent use—recreation picnic park.

Suitable/Unavailable Properties

Buildings (by State)

Arizona

Bldg. S–306
Yuma Proving Ground
Yuma Co: Yuma/La Paz AZ 85365–9104
Landholding Agency: Army
Property Number: 219420346
Status: Unutilized
Comment: 4103 sq. ft., 2-story, needs major rehab, scheduled to be vacated on or about 2/95.

Colorado

Bldg. P–1388
Fort Carson
Colorado Springs Co: El Paso CO 80913–
Landholding Agency: Army
Property Number: 219430134
Status: Unutilized
Comment: 240 sq. ft., 1-story steel structure, needs rehab, secure area with alternate access, off-site use only.

Georgia

Bldg. T201, Fort Stewart
Hinesville Co: Liberty GA 31314–
Landholding Agency: Army
Property Number: 219420357
Status: Unutilized
Comment: 2929 sq. ft., 1-story wood frame, needs repair, most recent use—offices, off-site use only.

Bldg. T–902, Fort Stewart
Hinesville Co: Liberty GA 31314–
Landholding Agency: Army
Property Number: 219420360
Status: Unutilized
Comment: 2990 sq. ft., 1-story wood frame, needs repair, most recent use—offices, off-siste use only.

Bldg. 704, Fort Stewart
Hinesville Co: Liberty GA 31314–
Landholding Agency: Army
Property Number: 219420364
Status: Unutilized
Comment: 2028 sq. ft., 1-story, needs major repair, most recent use—admin.

Bldg. TT0791
Fort Stewart
Hinesville Co: Liberty GA 31314–
Landholding Agency: Army
Property Number: 219440408
Status: Unutilized
Comment: 1440 sq. ft., 1-story aluminum frame, needs rehab, most recent use—aces. facility, off-site use only.

Bldg. TT0792
Fort Stewart
Hinesville Co: Liberty GA 31314–
Landholding Agency: Army
Property Number: 219440409
Status: Unutilized
Comment: 1440 sq. ft., 1-story aluminum frame, needs rehab, most recent use—aces. facility, off-site use only.

Bldg. TT0793
Fort Stewart
Hinesville Co: Liberty GA 31314–
Landholding Agency: Army
Property Number: 219440410
Status: Unutilized
Comment: 1440 sq. ft., 1-story aluminum frame, needs rehab, most recent use—aces. facility, off-site use only.

Bldg. 4090
Fort Benning
Ft. Benning Co: Muscogee GA 31905–
Landholding Agency: Army
Property Number: 219630007
Status: Underutilized
Comment: 3530 sq. ft., most recent use—chapel, off-site use only.

Hawaii

Bldg. S–275
Fort DeRussy
Honolulu HI 96815–
Landholding Agency: Army
Property Number: 219540014
Status: Unutilized
Comment: 26047 gross sq. ft., some termite damage, most recent use—office/workshop, limitations on use (PL90–110, Sec. 809).

Kansas

Bldg. T–2014, Fort Riley
Ft. Riley KS 66442–
Landholding Agency: Army
Property Number: 219520112
Status: Unutilized
Comment: 4856 sq. ft., 2-story wood frame, most recent use—admin., presence of asbestos, poor condition.

Bldg. T–2017, Fort Riley
Ft. Riley KS 66442–
Landholding Agency: Army
Property Number: 219520113
Status: Unutilized
Comment: 3292 sq. ft., 2-story wood frame, most recent use—admin., presence of asbestos, poor condition.

Bldg. T–2019, Fort Riley
Ft. Riley KS 66442–
Landholding Agency: Army
Property Number: 219520114
Status: Unutilized
Comment: 2353 sq. ft., 1-story wood frame, most recent use—admin., presence of asbestos, poor condition.

Bldg. 3210, Fort Riley
Ft. Riley KS 66442–
Landholding Agency: Army
Property Number: 219520192
Status: Unutilized
Comment: 190 sq. ft., 1-story, needs rehab, presence of asbestos.

Kentucky

Bldg. 05713, Fort Campbell
Ft. Campbell Co: Christian KY 422213–
Landholding Agency: Army
Property Number: 219410341
Status: Unutilized

Comment: 10944 sq. ft., 1-story, needs rehab, presence of asbestos, most recent use—maintenance shop.

Louisiana

Bldg. 3322, Fort Polk
Texas Avenue
Ft. Polk Co: Vernon Parish LA 71459–
Landholding Agency: Army
Property Number: 219440441
Status: Underutilized
Comment: 480 sq. ft., 1 story, need repairs, most recent use—offices.

Maryland

Bldgs. TMA4, TMA5, TMA8, TMA9
Fort George G. Meade
Ft. Meade Co: Anne Arundel MD 20755–5115
Landholding Agency: Army
Property Number: 219320292
Status: Unutilized
Comment: approx. 800 sq. ft. steel plate, gravel base ammunition storage area, fair condition.

Montana

USARC Bozeman Reserve Center
32 South Tracy Ave.
Bozeman Co: Gallatin MT
Landholding Agency: Army
Property Number: 219420391
Status: Unutilized
Comment: 15236 sq. ft., 3-story reserve center on .54 acres, bldg. on National Register of Historic Places, secured with alternate access
GSA Number: 7–D–MT–0605.

Nevada

U.S. Army Reserve Center
685 East Plumb Lane
Reno Co: Washoe NV 89502–
Landholding Agency: Army
Property Number: 219340180
Status: Unutilized
Comment: 11457 sq. ft. Reserve Center and 2611 sq. ft. vehicle repair shop on 4.29 acres, presence of asbestos, 1-story each, perpetual easement for road right of way 50 ft. from prop.

New Jersey

Bldg. 3305
Armament Research, Dev. and Eng. Center
Picatinny Arsenal Co: Morris NJ 07806–5000
Landholding Agency: Army
Property Number: 219540002
Status: Underutilized
Comment: 12000 sq. ft., 1-story, most recent use—admin and R&D activities.
Bldg. 1104
Armament Research, Dev. and Eng. Center
Picatinny Arsenal Co: Morris NJ 07806–5000
Landholding Agency: Army
Property Number: 219540003
Status: Unutilized
Comment: 1320 sq. ft., 2-story, fire/electrical/safety code violations, need repairs, most recent use—family housing.

Bldg. 1105
Armament Research, Dev. and Eng. Center
Picatinny Arsenal Co: Morris NJ 07806–5000
Landholding Agency: Army
Property Number: 219540004
Status: Unutilized
Comment: 2806 sq. ft., 3-story, fire/electrical safety code violations, need repairs, most recent use—family housing.

Bldg. 1113
Armament Research, Dev. & Eng. Center
Picatinny Arsenal Co: Morris NJ 07806–5000
Landholding Agency: Army
Property Number: 219540005
Status: Unutilized
Comment: 1580 sq. ft., 2 story, fire/electrical/safety code violations, need repairs, most recent use—family housing.

Bldg. 1117
Armament Research, Dev. & Eng. Center
Picatinny Arsenal Co: Morris NJ 07806–5000
Landholding Agency: Army
Property Number: 219540006
Status: Unutilized
Comment: 1784 sq. ft., 2 story, fire/electrical/safety code violations, need repairs, most recent use—family housing.

Bldg. 1118
Armament Research, Dev. & Eng. Center
Picatinny Arsenal Co: Morris NJ 07806–5000
Landholding Agency: Army
Property Number: 219540007
Status: Unutilized
Comment: 648 sq. ft., 1 story, fire/electrical/safety code violations, need repairs, most recent use—family housing.

Bldg. 1392
Armament Research, Dev. & Eng. Center
Picatinny Arsenal Co: Morris NJ 07806–5000
Landholding Agency: Army
Property Number: 219540008
Status: Unutilized
Comment: 1128 sq. ft., 1 story, fire/electrical/safety code violations, need repairs, most recent use—family housing.

Texas

Bldg. P–2000, Fort Sam Houston
San Antonio Co: Bexar TX 78234–5000
Landholding Agency: Army
Property Number: 219220389
Status: Unutilized
Comment: 49,542 sq. ft., 3-story brick structure, within National Landmark Historic District.

Bldg. P–2001, Fort Sam Houston
San Antonio Co: Bexar TX 78234–5000
Landholding Agency: Army
Property Number: 219220390
Status: Underutilized
Comment: 16,539 sq. ft., 4-story brick structure, within National Landmark Historic District.

Bldg. T–189, Fort Sam Houston
San Antonio Co: Bexar TX 78234–5000
Landholding Agency: Army
Property Number: 219220402
Status: Underutilized
Comment: 11,949 sq. ft., 4-story brick structure, within National Landmark Historic District, possible lead contamination.

Bldg. P–8249
Fort Sam Houston
San Antonio Co: Bexar TX 78234–5000
Landholding Agency: Army
Property Number: 219440455
Status: Excess
Comment: 2775 sq. ft., 1 story wood frame, lead paint, off-site removal only, most recent use—family housing.

Bldg. S–1461
Fort Sam Houston Co: Bexar TX 78234–5000
Landholding Agency: Army
Property Number: 219610772
Status: Unutilized
Comment: 11568 gross sq. ft., presence of asbestos/lead base paint, most recent use—admin., off-site use only.

Bldg. T–5114
Fort Sam Houston Co: Bexar TX 78234–5000
Landholding Agency: Army
Property Number: 219610777
Status: Unutilized
Comment: 3612 gross sq. ft., presence of asbestos/lead base paint, most recent use—dining hall, off-site use only.

Bldg. T–5124
Fort Sam Houston Co: Bexar TX 78234–5000
Landholding Agency: Army
Property Number: 219610778
Status: Unutilized
Comment: 3499 gross sq. ft., presence of asbestos/lead base paint, most recent use—dining facility, off-site use only.

Bldg. P–6088 thru P–6091
Fort Sam Houston Co: Bexar TX 78234–5000
Landholding Agency: Army
Property Number: 219610781
Status: Unutilized
Comment: 465 gross sq. ft., presence of lead base paint, needs repair, most recent use—storage, off-site use only.

Bldg. T–6101
Fort Sam Houston Co: Bexar TX 78234–5000
Landholding Agency: Army
Property Number: 219610782
Status: Unutilized
Comment: 400 sq. ft., presence of lead base paint, most recent use—dispatch office, off-site use only.

Virginia

Bldg. T–3004, Fort Pickett
Blackstone Co: Nottoway VA 23824–
Landholding Agency: Army
Property Number: 219310317
Status: Unutilized
Comment: 2350 sq. ft., 1-story wood frame, needs repair, most recent use—clinic.

Bldg. T–3022, Fort Pickett
Blackstone Co: Nottoway VA 23824–
Landholding Agency: Army
Property Number: 219310318
Status: Underutilized
Comment: 5310 sq. ft., 2-story wood frame, needs repair, most recent use—barracks.

Bldg. T3023, Fort Pickett
Blackstone Co: Nottoway VA 23824–
Landholding Agency: Army
Property Number: 219310319
Status: Underutilized
Comment: 5310 sq. ft., 2-story wood frame, needs repair, most recent use—barracks.

Bldg. T3024, Fort Pickett
Blackstone Co: Nottoway VA 23824–
Landholding Agency: Army
Property Number: 219310320
Status: Underutilized
Comment: 5310 sq. ft., 2-story wood frame, needs repair, most recent use—barracks.

Bldg. T3026, Fort Pickett
Blackstone Co: Nottoway VA 23824–
Landholding Agency: Army
Property Number: 219310321
Status: Underutilized
Comment: 3550 sq. ft., 1-story wood frame, needs repair, most recent use—dining room.

Bldg. T3025, Fort Pickett
Blackstone Co: Nottoway VA 23824–
Landholding Agency: Army
Property Number: 219310322
Status: Underutilized
Comment: 2950 sq. ft., 1-story wood frame, needs repair, most recent use—dining room.

Bldg. T3040, Fort Pickett
Blackstone Co: Nottoway VA 23824–
Landholding Agency: Army
Property Number: 219310323
Status: Underutilized
Comment: 2950 sq. ft., 1-story wood frame, needs repair, most recent use—dining room.

Bldg. T3041, Fort Pickett
Blackstone Co: Nottoway VA 23824–
Landholding Agency: Army
Property Number: 219310324
Status: Underutilized
Comment: 2950 sq. ft., 2-story wood frame, needs repair, most recent use—dining room.

Bldg. T3049, Fort Pickett
Blackstone Co: Nottoway VA 23824–
Landholding Agency: Army
Property Number: 219310325
Status: Underutilized
Comment: 2950 sq. ft., 2-story wood frame, needs repair, most recent use—dining room.

Bldg. T3050, Fort Pickett
Blackstone Co: Nottoway VA 23824–
Landholding Agency: Army
Property Number: 219310326
Status: Underutilized
Comment: 2950 sq. ft., 2-story wood frame, needs repair, most recent use—dining room.

Bldg. T3029, Fort Pickett
Blackstone Co: Nottoway VA 23824–
Landholding Agency: Army
Property Number: 219310327
Status: Underutilized
Comment: 5310 sq. ft., 2-story wood frame, needs repair, most recent use—barracks.

Bldg. T3030, Fort Pickett
Blackstone Co: Nottoway VA 23824–
Landholding Agency: Army
Property Number: 219310328
Status: Underutilized
Comment: 5310 sq. ft., 2-story wood frame, needs repair, most recent use—barracks.

Bldg. T3037, Fort Pickett
Blackstone Co: Nottoway VA 23824–
Landholding Agency: Army
Property Number: 219310329
Status: Underutilized
Comment: 5310 sq. ft., 2-story wood frame, needs repair, most recent use—barracks.

Bldg. T3038, Fort Pickett
Blackstone Co: Nottoway VA 23824–
Landholding Agency: Army
Property Number: 219310330
Status: Underutilized
Comment: 5310 sq. ft., 2-story wood frame, needs repair, most recent use—barracks.

Bldg. T3039, Fort Pickett
Blackstone Co: Nottoway VA 23824–
Landholding Agency: Army
Property Number: 219310331
Status: Underutilized
Comment: 5310 sq. ft., 2-story wood frame, needs repair, most recent use—barracks.

Bldg. T3042, Fort Pickett
Blackstone Co: Nottoway VA 23824–
Landholding Agency: Army
Property Number: 219310332
Status: Underutilized
Comment: 5310 sq. ft., 2-story wood frame, needs repair, most recent use—barracks.

Bldg. T3043, Fort Pickett
Blackstone Co: Nottoway VA 23824–
Landholding Agency: Army
Property Number: 219310333
Status: Underutilized
Comment: 5310 sq. ft., 2-story wood frame, needs repair, most recent use—barracks.

Bldg. T3044, Fort Pickett
Blackstone Co: Nottoway VA 23824–
Landholding Agency: Army
Property Number: 219310334
Status: Underutilized
Comment: 5310 sq. ft., 2-story wood frame, needs repair, most recent use—barracks.

Bldg. T3045, Fort Pickett
Blackstone Co: Nottoway VA 23824–
Landholding Agency: Army
Property Number: 219310335
Status: Underutilized
Comment: 5310 sq. ft., 2-story wood frame, needs repair, most recent use—barracks.

Bldg. T3046, Fort Pickett
Blackstone Co: Nottoway VA 23824–
Landholding Agency: Army
Property Number: 219310336
Status: Underutilized
Comment: 5310 sq. ft., 2-story wood frame, needs repair, most recent use—barracks.

Bldg. T3047, Fort Pickett
Blackstone Co: Nottoway VA 23824–
Landholding Agency: Army
Property Number: 219310337
Status: Underutilized
Comment: 5310 sq. ft., 2-story wood frame, needs repair, most recent use—barracks.

Bldg. T3048, Fort Pickett
Blackstone Co: Nottoway VA 23824–
Landholding Agency: Army
Property Number: 219310338
Status: Underutilized
Comment: 5310 sq. ft., 2-story wood frame, needs repair, most recent use—barracks.

Bldg. T3051, Fort Pickett
Blackstone Co: Nottoway VA 23824–
Landholding Agency: Army
Property Number: 219310339
Status: Underutilized
Comment: 5310 sq. ft., 2-story wood frame, needs repair, most recent use—barracks.

Bldg. T3052, Fort Pickett
Blackstone Co: Nottoway VA 23824–
Landholding Agency: Army
Property Number: 219310340
Status: Underutilized
Comment: 5310 sq. ft., 2-story wood frame, needs repair, most recent use—barracks.

Bldg. T3053, Fort Pickett
Blackstone Co: Nottoway VA 23824–
Landholding Agency: Army
Property Number: 219310341
Status: Underutilized
Comment: 5310 sq. ft., 2-story wood frame, needs repair, most recent use—barracks.

Bldg. T3054, Fort Pickett
Blackstone Co: Nottoway VA 23824–
Landholding Agency: Army
Property Number: 219310342
Status: Underutilized
Comment: 5310 sq. ft., 2-story wood frame, needs repair, most recent use—barracks.

Bldg. T3027, Fort Pickett
Blackstone Co: Nottoway VA 23824–
Landholding Agency: Army
Property Number: 219310343
Status: Underutilized
Comment: 5310 sq. ft., 2-story wood frame, needs repair, most recent use—barracks.

Bldg. T3028, Fort Pickett
Blackstone Co: Nottoway VA 23824–
Landholding Agency: Army
Property Number: 219310344
Status: Underutilized
Comment: 5310 sq. ft., 2-story wood frame, needs repair, most recent use—barracks.

Bldg. T3031, Fort Pickett
Blackstone Co: Nottoway VA 23824–
Landholding Agency: Army
Property Number: 219310345
Status: Underutilized
Comment: 2987 sq. ft., 1-story wood frame, needs repair, most recent use—admin./supply.

Bldg. T3032, Fort Pickett
Blackstone Co: Nottoway VA 23824–
Landholding Agency: Army
Property Number: 219310346
Status: Underutilized
Comment: 2987 sq. ft., 1-story wood frame, needs repair, most recent use—admin./supply.

Bldg. T3033, Fort Pickett
Blackstone Co: Nottoway VA 23824–
Landholding Agency: Army
Property Number: 219310347
Status: Underutilized
Comment: 2987 sq. ft., 1-story wood frame, needs repair, most recent use—admin./supply.

Bldg. T3034, Fort Pickett
Blackstone Co: Nottoway VA 23824–
Landholding Agency: Army
Property Number: 219310348
Status: Underutilized
Comment: 2987 sq. ft., 1-story wood frame, needs repair, most recent use—admin./supply.

Bldg. T3035, Fort Pickett
Blackstone Co: Nottoway VA 23824–
Landholding Agency: Army
Property Number: 219310349
Status: Underutilized
Comment: 2987 sq. ft., 1-story wood frame, needs repair, most recent use—admin./supply.

Bldg. T3036, Fort Pickett
Blackstone Co: Nottoway VA 23824–
Landholding Agency: Army
Property Number: 219310350
Status: Underutilized
Comment: 2987 sq. ft., 1-story wood frame, needs repair, most recent use—admin./supply.

Bldg. T3057, Fort Pickett
Blackstone Co: Nottoway VA 23824–
Landholding Agency: Army
Property Number: 219310351
Status: Underutilized
Comment: 2987 sq. ft., 1-story wood frame, needs repair, most recent use—admin./supply.

Bldg. T3055, Fort Pickett

Blackstone Co: Nottoway VA 23824–
Landholding Agency: Army
Property Number: 219310352
Status: Underutilized
Comment: 2488 sq. ft., 1-story wood frame, needs repair, most recent use—admin./supply.

Bldg. TT3001, Fort Pickett
Blackstone Co: Nottoway VA 23824–
Landholding Agency: Army
Property Number: 219310353
Status: Underutilized
Comment: 3302 sq. ft., 1-story wood frame, most recent use—chapel.

Bldg. T–179
Fort Monroe
Ft. Monroe VA 23651–
Landholding Agency: Army
Property Number: 219630001
Status: Underutilized
Comment: 1798 sq. ft., most recent use—storage, off-site use only.

Bldg. T–181
Fort Monroe
Ft. Monroe VA 23651–
Landholding Agency: Army
Property Number: 219630002
Status: Underutilized
Comment: 1835 sq. ft., most recent use—office, off-site use only.

Bldg. T–182
Fort Monroe
Ft. Monroe VA 23651–
Landholding Agency: Army
Property Number: 219630003
Status: Underutilized
Comment: 1997 sq. ft., most recent use—office, off-site use only.

Bldg. T–183
Fort Monroe
Ft. Monroe VA 23651–
Landholding Agency: Army
Property Number: 219630004
Status: Underutilized
Comment: 1760 sq. ft., most recent use—office, off-site use only.

Bldg. T–184
Fort Monroe
Ft. Monroe VA 23651–
Landholding Agency: Army
Property Number: 219630005
Status: Underutilized
Comment: 1750 sq. ft., most recent use—office, off-site use only.

Bldg. T–185
Fort Monroe
Ft. Monroe VA 23651–
Landholding Agency: Army
Property Number: 219630006
Status: Underutilized
Comment: 861 sq. ft., most recent use—office, off-site use only.

Land (by State)

Illinois

Bridge Ramp & Property
Rock Island Arsenal
Rock Island Co: Rock Island IL 61299–
Landholding Agency: Army
Property Number: 219620665
Status: Unutilized
Comment: Bridge Ramp 24 ft. wide, 600 ft. long.

North Carolina

.92 Acre—Land
Military Ocean Terminal, Sunny Point
Southport Co: Brunswick NC 28461–5000
Landholding Agency: Army
Property Number: 219610728
Status: Underutilized
Comment: municipal drinking waterwell, restricted by explosive safety regs., New Hanover County Buffer Zone.

10 Acre—Land
Military Ocean Terminal, Sunny Point
Southport Co: Brunswick NC 28461–5000
Landholding Agency: Army
Property Number: 219610729
Status: Underutilized
Comment: municipal park, restricted by explosive safety regs., New Hanover County Buffer Zone.

257 Acre—Land
Military Ocean Terminal, Sunny Point
Southport Co: Brunswick NC 28461–5000
Landholding Agency: Army
Property Number: 219610730
Status: Underutilized
Comment: state park, restricted by explosive safety regs., New Hanover County Buffer Zone.

24.83 acres—Tract of Land
Military Ocean Terminal, Sunny Point
Southport Co: Brunswick NC 28461–5000
Landholding Agency: Army
Property Number: 219620685
Status: Underutilized
Comment: 24.83 acres, municipal park, most recent use—New Hanover County explosive buffer zone.

Suitable/To Be Excessed

Buildings (by State)

New York

Bldg. P–1
Glen Falls Reserve Center
Glen Falls Co: Warren NY 12801–
Location: 67–73 Warren Street
Landholding Agency: Army
Property Number: 219540015
Status: Unutilized
Comment: 19613 sq. ft., 2 story w/basement, concrete block/brick frame on .475 acres.

Bldgs. P–1 & P–2
Elizabethtown Reserve Center
Corner of Water and Cross Streets
Elizabethtown Co: Esses NY 12932–
Landholding Agency: Army
Property Number: 219540016
Status: Unutilized
Comment: 4316 sq. ft. reserve center/1325 sq. ft. motor repair shop, 1 story each, concrete block/brick frame, on 5.05 acres.

Bldgs. P–1 & P–2
Olean Reserve Center
423 Riverside Drive
Olean Co: Cattaraugus NY 14760–
Landholding Agency: Army
Property Number: 219540017
Status: Unutilized
Comment: 4464 sq. ft. reserve center/1325 sq. ft. motor repair shop, 1 story each, concrete block/brick frame, on 3.9 acres.

Land (by State)

New York

Galeville Army Training Site
Shawangunk Co: Ulster NY 12589–
Landholding Agency: Army
Property Number: 219510128
Status: Underutilized
Comment: 621.05 acres, improved w/inactive runway, airfield & taxi-way, potential utilities, 234 acres is wetlands and habitat for threatened species.

Texas

Land Saginaw Army Aircraft Plt
Saginaw Co: Tarrant TX 76070–
Landholding Agency: Army
Property Number: 219014814
Status: Unutilized
Comment: 43.08 acres; includes buildings/structures/parking and air strip.

Unsuitable Properties

Buildings (by State)

Alabama

130 Bldgs.
Redstone Arsenal
Redstone Arsenal Co: Madison AL 35898–
Landholding Agency: Army
Property Number: 219014000, 219014009, 219014012, 219014015–219014051, 219014057, 219014060, 219014292, 219110109, 219120247–219120250, 219230190, 219330001–219330002, 219430266–219430290, 219440078–219440082, 219520032, 219530010–219530048, 219610272–219610280
Status: Unutilized
Reason: Secured Area; (Some are extensively deteriorated.)

61 Bldgs., Fort Rucker
Ft. Rucker Co: Dale AL 36362–
Landholding Agency: Army
Property Number: 219220343–219220344, 219310016, 219320001, 219330003–219330010, 219340116, 219340118, 219340124–219340125, 219410021–219410023, 219430261–219430264, 219440083–219440084, 219440094–219440095, 219520057–219520058, 219530008, 219620371–219620374, 219620802
Status: Unutilized
Reason: Extensive deterioration.

Bldgs. 25203, 25205–25207, 25209, 25501, 25503, 25505, 25507, 25510, 29101, 29103–29109
Fort Rucker
Stagefield Areas
Ft. Rucker Co: Dale AL 36362–5138
Landholding Agency: Army
Property Number: 219410020–219410021, 219410024
Status: Unutilized
Reason: Secured area.

27 Bldgs.
Phosphate Development Works
Muscle Shoals Co: Colbert AL 35660–1010
Landholding Agency: Army
Property Number: 219220789–219220815
Status: Unutilized
Reason: Extensive deterioration.

4 Bldgs., Fort McClellan
Ft. McClellan Co: Calhoun AL 36205–5000
Landholding Agency: Army
Property Number: 219440098–219440099, 219440102, 219610281
Status: Unutilized
Reason: Extensive deterioration.

Bldg. 402–C
Alabama Army Ammunition Plant
Childersburg Co: Talladega AL 35044–
Landholding Agency: Army
Property Number: 219420124
Status: Unutilized
Reason: Secured Area.

Alaska

17 Bldgs.
Fort Greely
Ft. Greely AK 99790–
Landholding Agency: Army
Property Number: 219210124–219210125, 219220320–219220332, 219520064
Status: Unutilized
Reason: Extensive deterioration.

Bldg. 1065, Fairbanks North Star
Ft. Wainwright AK 99703–
Landholding Agency: Army
Property Number: 219620369
Status: Underutilized
Reason: Within 2000 ft. of flammable or explosive material; Secured area; Floodway.

Bldg. 1501, Fort Greely
Ft. Greely AK 99505–
Landholding Agency: Army
Property Number: 219240327
Status: Unutilized
Reason: Secured Area.

Sullivan Roadhouse, Fort Greely
Ft. Greely AK
Landholding Agency: Army
Property Number: 219430291
Status: Unutilized
Reason: Extensive deterioration.

Bldg. 45070, Fort Richardson
Ft. Richardson AK 99505
Landholding Agency: Army
Property Number: 219620370
Status: Unutilized
Reason: Extensive deterioration.

Arizona

32 Bldgs.
Navajo Depot Activity
Bellemont Co: Coconino AZ 86015–
Location: 12 miles west of Flagstaff, Arizona on I–40
Landholding Agency: Army
Property Number: 219014560–219014591
Status: Underutilized
Reason: Secured Area.

10 properties: 753 earth covered igloos; above ground standard magazines
Navajo Depot Activity
Bellemont Co: Coconino AZ 86015–
Location: 12 miles west of Flagstaff, Arizona on I–40.
Landholding Agency: Army
Property Number: 219014592–219014601
Status: Underutilized
Reason: Secured Area.

9 Bldgs.
Navajo Depot Activity
Bellemont Co: Coconino AZ 86015–5000
Location: 12 miles west of Flagstaff on I–40
Landholding Agency: Army
Property Number: 219030273–219030274, 219120175–219120181
Status: Unutilized
Reason: Secured Area.

Bldgs. 68054, 14470, 15405, 30022
Fort Huachuca
Sierra Vista Co: Cochise AZ 85635–
Landholding Agency: Army
Property Number: 219430315, 219610286
Status: Excess
Reason: Extensive deterioration.

Bldgs. S–2085
Yuma Proving Ground
Yuma Co: Yuma/LaPaz AZ 85365–9104
Landholding Agency: Army
Property Number: 219330020
Status: Unutilized
Reason: Secured area.

Bldg. T–231
Yuma Proving Ground
Yuma Co: LaPaz AZ 85365–9104
Landholding Agency: Army
Property Number: 219510093
Status: Unutilized
Reason: Extensive deterioration.

Arkansas

Fort Smith USAR Center
Fort Smith
1218 South A Street
Fort Smith Co: Sebastian AR 72901–
Landholding Agency: Army
Property Number: 219014928
Status: Unutilized
Reason: Within 2000 ft. of flammable or explosive material.

Army Reserve Center
Hwy 79 North
Camden Co: Calhoun AR 71701–3415
Landholding Agency: Army
Property Number: 219220345
Status: Unutilized
Reason: Extensive deterioration.

6 Bldgs.
Pine Bluff Arsenal
Pine Bluff Co: Jefferson AR 71602–9500
Landholding Agency: Army
Property Number: 219420138–219420142, 219440077
Status: Unutilized
Reason: Secured Area; Extensive deterioration.

California

Bldgs. P–177, P–178, 325, S–308, S–308A, T–308B
Fort Hunter Liggett
Jolon Co: Monterey CA 93928–
Landholding Agency: Army
Property Number: 219012414–219012415, 219012600, 219240284–219240285, 219240287
Status: Unutilized
Reason: Within 2000 ft. of flammable or explosive material; (Some are in a secured area.)

Bldg. 18
Riverbank Army Ammunition Plant
5300 Claus Road
Riverbank Co: Stanislaus CA 95367–
Landholding Agency: Army
Property Number: 219012554
Status: Unutilized
Reason: Within 2000 ft. of flammable or explosive material; (Secured area.)

11 Bldgs., Nos. 2–8, 156, 1, 120, 181
Riverbank Army Ammunition Plant
Riverbank Co: Stanislaus CA 95367–
Landholding Agency: Army
Property Number: 219013582–219013588, 219013590, 219240444–219240446
Status: Underutilized
Reason: Secured area.

9 Bldgs.
Oakland Army Base
Oakland Co: Alameda CA 94626–5000
Landholding Agency: Army
Property Number: 219013903–219013906, 219120051, 219340008–219340011
Status: Unutilized
Reason: Secured Area; (Some are extensively deteriorated.)

Bldgs. S–108, S–290
Sharpe Army Depot
Lathrop Co: San Joaquin CA 95331–
Landholding Agency: Army
Property Number: 219014290, 219230179
Status: Underutilized
Reason: Secured Area.

S–184
Fort Hunter Liggett
Ft. Hunter Liggett Co: Monterey CA 93928–
Landholding Agency: Army
Property Number: 219014602
Status: Underutilized
Reason: Secured Area.

12 Bldgs.
Sierra Army Depot
Herlong Co: Lassen CA 96113–
Landholding Agency: Army
Property Number: 219014713–219014717, 219014719–219014721, 219230181, 219320012
Status: Unutilized
Reason: Secured Area.

P–88
Sierra Army Depot
Road Oil Storage
Herlong Co: Lassen CA 96113–
Landholding Agency: Army
Property Number: 219014707
Status: Unutilized
Reason: Oil Storage Tank.

Bldgs. 173, 177
Roth Road—Sharpe Army Depot
Lathrop Co: San Joaquin CA
Landholding Agency: Army
Property Number: 219014940–219014941
Status: Unutilized
Reason: Secured Area.

Bldgs. 13, 171, 178 Riverbank Ammun Plant
5300 Claus Road
Riverbank Co: Stanislaus CA 95367–
Landholding Agency: Army
Property Number: 219120162–219120164
Status: Underutilized
Reason: Secured Area.

Bldg. S–521, Sharpe Site
Lathrop Co: San Joaquin CA 95331–
Landholding Agency: Army
Property Number: 219240155
Status: Unutilized
Reason: Secured Area.

Bldgs. T–187, 403, 194 Fort Hunter Liggett
Ft. Hunter Liggett Co: Monterey CA 93928–
Landholding Agency: Army
Property Number: 219240321, 219440184, 219610287
Status: Unutilized
Reason: Secured Area; Extensive deterioration.

Bldgs. 36, 257, Tracy Facility
Tracy Co: San Joaquin CA 95376–
Landholding Agency: Army
Property Number: 219330023, 219330025
Status: Unutilized

Reason: Secured Area.

10 Bldgs., Fort Irwin
Ft. Irwin Co: San Bernardino CA 92310–
Landholding Agency: Army
Property Number: 219330026–219330035
Status: Unutilized
Reason: Secured Area; Extensive Deterioration.

31 Bldgs.
DDDRW Sharpe Facility
Tracy Co: San Joaquin CA 95331–
Landholding Agency: Army
Property Number: 219430017–219430039, 219430317, 219610289–219610296
Status: Unutilized
Reason: Secured Area.

US Army Reserve Center
Rio Vista Co: Sonoma CA 94571–
Landholding Agency: Army
Property Number: 219430316
Status: Unutilized
Reason: Floodway.

6 Buildings
Oakland Army Base
Oakland Co: Alameda CA 94626–
Location: Include: 90, 790, 792, 807, 829, 916
Landholding Agency: Army
Property Number: 219510097
Status: Unutilized
Reason: Secured Area; Within 2000 ft, of flammable or explosive material.

Bldg. 43; Bunkers 41, 42, 45, 46, 47
Santa Rosa High Frequency Radio Station
Santa Rosa CA
Landholding Agency: Army
Property Number: 219520036
Status: Excess
Reason: Secured Area.

Bldgs. 29, 39, 73, 154, 155, 193, 204, 257
Los Alamitos Co: Orange CA 90720–5001
Landholding Agency: Army
Property Number: 219520040
Status: Unutilized
Reason: Extensive deterioration.

Bldgs. 1103, 1131
Parks Reserve Forces Training Area
Dublin Co: Alameda CA 94568–5201
Landholding Agency: Army
Property Number: 219520056
Status: Unutilized
Reason: Extensive deterioration.

Bldgs. 144, 429–430
National Training Center, Fort Irwin
Ft. Irwin Co: San Bernardino CA 92310–
Landholding Agency: Army
Property Number: 219530066
Status: Unutilized
Reason: Secured Area; Extensive deterioration.

19 Bldgs.
National Training Center, Fort Irwin
Ft. Irwin Co: San Bernardino CA 92310–
Location: #556, 558, 562, 564, 578, 581, 584, 586, 609, 474, 600, 410, 427, 485, 483, 579, 583, 570, 568
Landholding Agency: Army
Property Number: 219530067
Status: Unutilized
Reason: Secured Area; Extensive deterioration.

20 Bldgs.
National Training Center, Fort Irwin
Ft. Irwin Co: San Bernardino CA 92311–5097
Location: 426, 428, 435–437, 439, 441, 462, 464, 466, 510, 527, 529, 537, 539, 544–545, 547, 549, 608
Landholding Agency: Army
Property Number: 219610288
Status: Unutilized
Reason: Secured Area.

Bldgs. 401, Sierra Army Depot
Herlong Co: Lassen CA 96113–
Landholding Agency: Army
Property Number: 219620382
Status: Unutilized
Reason: Within 2000 ft. of flammable or explosive material Secured Area.

National Training Center, Fort Irwin
Fort Irwin
Ft. Irwin Co: San Bernardino CA 92310–
Landholding Agency: Army
Property Number: 219620383
Status: Unutilized
Reason: Secured Area; Extensive deterioration.

Colorado

Bldgs. T–317, T–412, 431, 433
Rocky Mountain Arsenal
Commerce Co: Adams CO 80022–2180
Landholding Agency: Army
Property Number: 219320013–219320016
Status: Unutilized
Reason: Within 2000 ft. of flammable or explosive material; Secured Area; Extensive deterioration.

56 Bldgs. Fort Carson
Ft. Carson Co: El Paso CO 80913–5023
Landholding Agency: Army
Property Number: 219610297–219610318, 219620384–219620409
Status: Unutilized
Reason: Extensive deterioration.

Georgia

Fort Stewart
Sewage Treatment Plant
Ft. Stewart Co: Hinesville GA 31314–
Landholding Agency: Army
Property Number: 219013922
Status: Unutilized
Reason: Sewage treatment.

Facility 12304
Fort Gordon
Augusta Co: Richmond GA 30905–
Locations: Located off Lane Avenue
Landholding Agency: Army
Property Number: 219014787
Status: Unutilized
Reason: Wheeled vehicle grease/inspection rack.

82 Bldgs.
Fort Gordon
Augusta Co: Richmond GA 30905–
Landholding Agency: Army
Property Number: 219220269, 219220293, 219320026, 219410039–219410072, 219410089, 219410091–219410116, 219410120, 219410122, 219410125, 219410131, 219440199, 219520067, 219610330–219610340, 219610346
Status: Unutilized
Reason: Extensive deterioration.

Bldgs. 11726–11727
Fort Gordon
Augusta Co: Richmond GA 30905–
Landholding Agency: Army
Property Number: 219210138–219210139
Status: Unutilized
Reason: Secured Area.

4 Bldgs., Fort Benning
Ft. Benning Co: Muscogee GA 31905–
Landholding Agency: Army
Property Number: 219220334–219220337
Status: Unutilized
Reason: Detached lavatory.

18 Bldgs., Fort Benning
Ft. Benning Co: Muscogee GA 31905–
Landholding Agency: Army
Property Number: 219520150, 219610319–219610324, 219620804–219620814
Status: Unutilized
Reason: Extensive deterioration.

23 Bldgs.
Fort Gillem
Forest Park Co: Clayton GA 30050–
Landholding Agency: Army
Property Number: 219310091, 219310093–219310094, 219310099, 219310107, 219320030, 219320033, 219620416–219620421, 219620815–219620824
Status: Unutilized
Reason: (Some are extensively deteriorated.); (Most are in a secured area.)

9 Bldgs., Fort Stewart
Hinesville Co: Liberty GA 31314–
Landholding Agency: Army
Property Number: 219420155, 219420162, 219420168, 219520045, 219610328–219610329, 219620410–219620412
Status: Unutilized
Reason: Extensive Deterioration.

11 Bldgs., Hunter Army Airfield
Savannah Co: Chatham GA 31409–
Landholding Agency: Army
Property Number: 219420152–219420153, 219430318–219430319, 219530070–219530071, 219610325–219610326, 219620413–219620415
Status: Unutilized
Reason: Extensive deterioration.

Bldg. P–8063, Hunter Army Airfield
Savannah Co: Chatham GA 31409–
Landholding Agency: Army
Property Number: 219520027
Status: Excess
Reason: Latrine.

Bldgs. T–707, T–709, T–713, T–714, T–715, T–716, T–717, T–914, T–922
Hunter Army Airfield
Savannah Co: Chatham GA 31409–
Landholding Agency: Army
Property Number: 219520041
Status: Excess
Reason: Extensive deterioration.

Bldg. 246, Fort McPherson
Ft. McPherson Co: Fulton GA 30330–5000
Landholding Agency: Army
Property Number: 219620803
Status: Underutilized
Reason: Secured Area.

Hawaii

PU–01, 02, 03, 04, 05, 06, 07, 08, 09, 10, 11
Schofield Barracks
Kolekole Pass Road
Wahiawa Co: Wahiawa HI 96786–
Landholding Agency: Army
Property Number: 219014836–219014837
Status: Unutilized
Reason: Secured Area.

P–3384
Schofield Barracks

Wahiawa Co: Wahiawa HI 96786–
Landholding Agency; Army
Property Number: 219030361
Status: Unutilized
Reason: Secured Area.

6 Bldgs., Fort Shafter
Honolulu Co: Honolulu HI 96819–
Landholding Agency: Army
Property Number: 219320035, 219530072–219530073, 219610349–219610350, 219620426
Status: Unutilized
Reason: Extensive deterioration.

Bldgs. 754–C, P–1519 A/B, T–3002, T–1087A
Schofield Barracks
Wahiawa Co: Wahiawa HI 96786–
Landholding Agency: Army
Property Number: 219320034, 219420154, 219520063, 219610347
Status: Unutilized
Reason: Extensive deterioration.

Bldgs. 572, S–822, T–1305, T–1425
Wheeler Army Airfield
Wahiawa HI 96857–
Landholding Agency: Army
Property Number: 219510088, 219520039, 219610348, 219620422
Status: Unutilized
Reason: Secured Area.

Bldgs. P–01506, S01507, P–01508
Wheeler Army Airfield
Wahiawa HI 96786–
Landholding Agency: Army
Property Number: 219520003
Status: Underutilized
Reason: Within 2000 ft. of flammable or explosive material.

Bldgs. P–33, P–30, T–136
Dillingham Military Reservation
Waialua HI 96791–
Landholding Agency: Army
Property Number: 219620423–219620425
Status: Unutilized
Reason: Extensive deterioration.

Illinois

609 Bldgs. and Groups
Joliet Army Ammunition Plant
Joliet Co: Will IL 60436–
Landholding Agency: Army
Property Number: 219010153–219010317, 219010319–219010407, 219010409–219010413, 219010415–219010439, 219011750–219011879, 219011881–219011908, 219012331, 219013076–219013138, 219014722–219014781, 219030277–219030278, 219040354, 219140441–219140446, 219210146, 219240457–219240465, 219330062–219330094
Status: Unutilized
Reason: Secured Area; many within 2000 ft. of flammable or explosive materials; some within floodway.

Bldgs. 58, 59 and 72, 69, 64, 105
Rock Island Arsenal
Rock Island Co: Rock Island IL 61299–5000
Landholding Agency: Army
Property Number: 219110104–219110108
Status: Unutilized
Reason: Secured Area.

Bldgs. 133, 141 Rock Island Arsenal
Gillespie Avenue
Rock Island Co: Rock Island IL 61299–
Landholding Agency: Army
Property Number: 219210100, 219620428
Status: Unutilized
Reason: Extensive deterioration.

13 Bldgs. Savanna Army Depot Activity
Savanna Co: Carroll IL 61074–
Landholding Agency: Army
Property Number: 219230126–219230127, 219430326–219430335, 219420397
Status: Unutilized
Reason: Extensive deterioration.

Bldgs. 103, 114, 417, 110
Charles Melvin Price Support Center
Granite City Co: Madison IL 62040–
Landholding Agency: Army
Property Number: 219420182–219420184, 219510008
Status: Unutilized
Reason: Secured Area; Extensive deterioration.

Indiana

328 Bldgs.
Indiana Army Ammunition Plant (INAAP)
Charlestown Co: Clark IN 47111–
Landholding Agency: Army
Property Number: 219010913–219010920, 219010924–219010936, 219010952, 219010955, 219010957, 219010959–219010960, 219010962–219010964, 219010966–219010967, 219010969–219010970, 219011449, 219011454, 219011456–219011457, 219011459–219011464, 219013764, 219013848, 219014608–219014653, 219014655–219014661, 219014663–219014683, 219030315, 219120168–219120171, 219140425–219140440, 219210152–219210155, 219230034–219230037, 219320036–219320111, 219420170–219420181, 219440159–219440163, 219610367–219610413, 219620435–219620452
Status: Unutilized
Reason: Within 2000 ft. of flammable or explosive material; (Most are within a secured area.)

172 Bldgs.
Newport Army Ammunition Plant
Newport Co: Vermillion IN 47966–
Landholding Agency: Army
Property Number: 219011584, 219011586–219011587, 219011589–219011590, 219011592–219011627, 219011629–219011636, 219011638–219011641, 219210149–219210151, 219220220, 219230032–219230033, 219230336–2192430338, 219520033, 219520042, 219530075–219530097
Status: Unutilized
Reason: Secured Area; (Some are extensively deterioration.

2 Bldgs.
Atterbury Reserve Forces Training Area
Edinburgh Co: Johnson IN 46124–1096
Landholding Agency: Army
Property Number: 219230030–219230031
Status: Unutilized
Reason: Extensive deterioration.

Bldg. 2635, Indiana Army Ammunition Plant
Charlestown Co: Clark IN 47111–
Landholding Agency: Army
Property Number: 219240322
Status: Unutilized
Reason: Secured Area; Extensive deterioration.

22 Bldgs., Camp Atterbury
Edinburgh IN 46124–
Landholding Agency: Army
Property Number: 219610351–219610366, 219620429–219620434
Status: Unutilized
Reason: Secured Area; Extensive deterioration.

Iowa

96 Bldgs.
Iowa Army Ammunition Plant
Middletown Co: Des Moines IA 52638–
Landholding Agency: Army
Property Number: 219012605–219012607, 219012609, 219012611, 219012613, 219012615, 219012620, 219012622, 219012624, 219013706–219013738, 219120172–219120174, 219440112–219440158, 219510089, 219520002, 219520070, 219610414
Status: Unutilized
Reason: (Many are in a Secured Area); (Most are within 2000 ft. of flammable or explosive material.)

30 Bldgs., Iowa Army Ammunition Plant
Middletown Co: Des Moines IA 52638–
Landholding Agency: Army
Property Number: 219230005–219230029, 219310017, 219330061, 219340091, 219520053, 219520151
Status: Unutilized
Reason: Extensive deterioration.

Kansas

37 Bldgs.
Kansas Army Ammunition Plant
Production Area
Parsons Co: Labette KS 67357–
Landholding Agency: Army
Property Number: 219011909–219011945
Status: Unutilized
Reason: Secured Area; (Most are within 2000 ft. of flammable or explosive material.

244 Bldgs.
Sunflower Army Ammunition Plant
35425 W. 103rd Street
DeSoto Co: Johnson KS 66018–
Landholding Agency: Army
Property Number: 219040039, 219040045, 219040048–219040051, 219040053, 219040055, 219040063–219040067, 219040072–219040080, 219040086–219040099, 219040102, 219040111–219040112, 219040118–219040119, 219040121–219040124, 219040126, 219040128–219040133, 219040136–219040137, 219040139–219040140, 219040143, 219040149–219040154, 219040156, 219040160–219040165, 219040168–219040170, 219040180, 219040182–219040185, 219040190–219040191, 219040202, 219040205–219040207, 219040208, 219040210–219040221, 219040234–219040239, 219040241–219040254, 219040256–219040257, 219040260, 219040262–219040267, 219040270–219040279, 219040282–219040319, 219040321–219040323, 219040325–219040327, 219040330–219040335, 219040349, 219040353, 219110073, 219140569–219140577, 219140580–219140591, 219140594, 219140599–219140601, 219140606–219140612, 219420185–219420187, 219610415–219610437

Status: Unutilized
Reason: Within 2000 ft. of flammable or explosive material; Floodway; Secured Area.

21 Bldgs.
Sunflower Army Ammunition Plant
35425 W. 103rd Street
DeSoto Co: Johnson KS 66018–
Landholding Agency: Army
Property Number: 219040007–219040008, 219040010–219040012, 219040014–219040027, 219040030–219040031
Status: Unutilized
Reason: Within 2000 ft. of flammable or explosive material; Floodway.

88 Bldgs.
Fort Riley
Ft. Riley Co: Geary KS 66442–
Landholding Agency: Army
Property Number: 219240080, 219430040, 219440164–219440167, 219440181, 219440183, 219530100–219530125, 219610438–219610468, 219610613–219610631, 219620453–219620455, 219620825–219620826
Status: Unutilized
Reason: Extensive deterioration.

11 Latrines
Sunflower Army Ammunition Plant
35425 West 103rd
Desoto Co: Johnson KS 66018–
Landholding Agency: Army
Property Number: 219140578–219140579, 219140593, 219140595–219140598, 219140602–219140605
Status: Unutilized
Reason: Detached Latrine.

75 Bldgs., Sunflower Army Ammunition Plant
DeSoto Co: Johnson KS 66018–
Landholding Agency: Army
Property Number: 219240333–219240394, 219240402, 219240410–219240416, 219240420, 219240434–219240437
Status: Unutilized
Reason: Secured Area; Within 2000 ft. of flammable or explosive material; Extensive deterioration.

121 Bldgs.
Kansas Army Ammunition Plant
Parsons Co: Labette KS 67357–
Landholding Agency: Army
Property Number: 219620518–219620638
Status: Unutilized
Reason: Secured Area.

Kentucky

Bldg. 126
Lexington-Blue Grass Army Depot
Lexington Co: Fayette KY 40511–
Location: 12 miles northeast of Lexington, Kentucky.
Landholding Agency: Army
Property Number: 219011661
Status: Unutilized
Reason: Secured Area; Sewage treatment facility.

Bldg. 12
Lexington—Blue Grass Army Depot
Lexington Co: Fayette KY 40511–
Location: 12 miles Northeast of Lexington Kentucky.
Landholding Agency: Army
Property Number: 219011663
Status: Unutilized
Reason: Industrial waste treatment plant.

4 Bldgs., Fort Knox
Ft. Knox Co: Hardin KY 40121–
Landholding Agency: Army
Property Number: 219320113–219320115, 219410146
Status: Unutilized
Reason: Extensive deterioration.

5 Bldgs., Fort Campbell
Ft. Campbell Co: Christian KY 42223–
Landholding Agency: Army
Property Number: 219430047, 219610632–219610634, 219620456–219620457
Status: Unutilized
Reason: Extensive deterioration; (Some are in a secured area.)

Louisiana

514 Bldgs.
Louisiana Army Ammunition Plant
Doylin Co: Webster LA 71023–
Landholding Agency: Army
Property Number: 219011668–219011670, 219011700, 219011714–219011716, 219011735–219011737, 219012112, 219013571–219013572, 219013863–219013869, 219110124, 219110127, 219110131, 219110135–219110136, 219120290, 219240137–219240150, 219420330–219420332, 219610049–219610263, 219620001–219620200, 219620745–219620801
Status: Unutilized
Reason: Secured Area; (Most are within 2000 ft. of flammable or explosive material.); (Some are extensively deteriorated.)

Staff Residences
Louisiana Army Ammunition Plant
Doyline Co: Webster LA 71023–
Landholding Agency: Army
Property Number: 219120284–219120286
Status: Excess
Reason: Secured Area.

15 Bldgs., Fort Polk
Ft. Polk Co: Vernon Parish LA 71459–7100
Landholding Agency: Army
Property Number: 219320282, 219340107–219340108, 219430339–219430340, 219520059, 219620458–219620466
Status: Unutilized
Reason: Extensive deterioration; (Some are in Floodway.)

Maryland

92 Bldgs.
Aberdeen Proving Ground
Aberdeen City Co: Harford MD 21005–5001
Landholding Agency: Army
Property Number: 219011406–219011417, 219012608, 219012610, 219012612, 219012614, 219012616–219012617, 219012619, 219012623, 219012625–219012629, 219012631, 219012633–219012635, 219012637–219012642, 219012645–219012651, 219012655–219012664, 219013773, 219014711–219014712, 219030316, 219110140, 219240329, 219530128–219530131, 219610476–219610483, 219610485, 219610489–21910492, 219620467–219620471
Status: Unutilized
Reason: Most are in a secured area; (Some are within 2000 ft. of flammable or explosive material.); (Some are in a floodway) (Some are extensively deteriorated.)

Bldg. 1958
Fort George G. Meade
Fort Meade Co: Anne Arundel MD 20755–
Landholding Agency: Army
Property Number: 219014789
Status: Unutilized
Reason: Secured Area.

Bldg. 10401
Aberdeen Proving Ground
Harford Co: Harford MD 21005–5001
Landholding Agency: Army
Property Number: 219110138
Status: Unutilized
Reason: Sewage treatment plant.

Bldg. 10402
Aberdeen Proving Ground
Aberdeen Area
Aberdeen City Co: Harford MD 21005–5001
Landholding Agency: Army
Property Number: 219110139
Status: Unutilized
Reason: Sewage pumping station.

39 Bldgs. Ft. George G. Meade
Ft. Meade Co: Anne Arundel MD 20755–
Landholding Agency: Army
Property Number: 219130059, 219140458, 219140460–219140461, 219140465, 210140467, 219140510, 219210123, 219220142, 219220146–219220147, 219220153, 219220171–219220173, 219220190–219220192, 219220195–219220197, 219240121, 219310022, 219310026–219310027, 219310031–219310033, 219320144, 219330114–219330118, 219340013, 219420333–219420334, 219530167–219530168
Status: Unutilized
Reason: Extensive deterioration.

Bldgs. 132, 135 Fort Ritchie
Ft. Ritchie Co: Washington MD 21719–5010
Landholding Agency: Army
Property Number: 219330109–219330110
Status: Underutilized
Reason: Secured Area.

Bldg. T–116, Fort Detrick
Frederick Co: Frederick MD 21762–5000
Landholding Agency: Army
Property Number: 219340012
Status: Unutilized
Reason: Extensive deterioration.

Massachusetts

Material Technology Lab
405 Arsenal Street
Watertown Co: Middlesex MA 02132–
Landholding Agency: Army
Property Number: 219120161
Status: Underutilized
Reason: 2000 ft. of flammable or explosive material; Floodway; Secured Area.

Bldg. 3462, Camp Edwards
Massachusetts Military Reservation
Bourne Co: Barnstable MA 02462–5003
Landholding Agency: Army
Property Number: 219230095
Status: Unutilized
Reason: Secured Area; Extensive deterioration.

Bldgs. 3596, 1209–1211 Camp Edwards
Massachusetts Military Reservation
Bourne Co: Barnstable MA 02462–5003
Landholding Agency: Army
Property Number: 219230096, 219310018–219310020
Status: Unutilized

Reason: Secured Area.

Michigan

Bldgs. 602, 604
US Army Garrison Selfridge
Mt. Clemens Co: Macomb MI 48043–
Landholding Agency: Army
Property Number: 219012355–219012356
Status: Unutilized
Reason: Within airport runway clear zone; Floodway; Secured Area.

Detroit Arsenal Tank Plant
28251 Van Dyke Avenue
Warren Co: Macomb MI 48090–
Landholding Agency: Army
Property Number: 219014605
Status: Underutilized
Reason: Secured Area.

Bldgs. 5755–5756
Newport Weekend Training Site
Carleton Co: Monroe MI 48166
Landholding Agency: Army
Property Number: 219310060–219310061
Status: Unutilized
Reason: Secured Area; Extensive deterioration.

25 Bldgs.
Fort Custer Training Center
2501 26th Street
Augusta Co: Kalamazoo MI 49102–9205
Landholding Agency: Army
Property Number: 219014947–219014963, 219140447–219140454
Status: Unutilized
Reason: Secured Area.

Minnesota

169 Bldgs.
Twin Cities Army Ammunition Plant
New Brighton Co: Ramsey MN 55112–
Landholding Agency: Army
Property Number: 219120165–219120166, 219210014–219210015, 219220227–219220235, 219240328, 219310055–219310056, 219320145–219320156, 219330096–219330108, 219340015, 219410159–219410189, 219420195–219420284, 219430059–219430064
Status: Unutilized
Reason: Secured Area; (Most are within 2000 ft. of flammable or explosive material.); (Some are extensively deteriorated.)

Mississippi

Bldg. 8301
Mississippi Army Ammunition Plant
Stennis Space Center Co: Hancock MS 39529–7000
Landholding Agency: Army
Property Number: 219040438
Status: Unutilized
Reason: Within 2000 ft. of flammable or explosive material; Secured Area.

Missouri

Lake City Army Ammo. Plant
59, 59A, 59C, 59B, 18, 94, 149, T201, 6A, 6C, 6D, 6E, 6F
Independence Co: Jackson MO 64050–
Landholding Agency: Army
Property Number: 219013666–219013669, 219530134–219530138
Status: Unutilized
Reason: Secured Area; (Some are within 2000 ft. of flammable or explosive material.)

9 Bldgs.
St. Louis Army Ammunition Plant
4800 Goodfellow Blvd.
St. Louis Co: St. Louis MO 63120–1798
Landholding Agency: Army
Property Number: 219120067–219120068, 219610469–219610475
Status: Unutilized
Reason: Secured Area; (Some are extensively deteriorated.)

10 Bldgs.
Fort Leonard Wood
Ft. Leonard Wood Co: Pulaski MO 65473–5000
Landholding Agency: Army
Property Number: 219140422–219140423, 219430070–219430078
Status: Underutilized
Reason: Within 2000 ft. of flammable or explosive material.

Montana

Bldgs. T0033, T0451, T0452
Fort Harrison
Ft. Harrison Co: Lewis/Clark MT 59636
Landholding Agency: Army
Property Number: 219620473–219620475
Status: Unutilized
Reason: Within 2000 ft. of flammable or explosive material; Extensive deterioration.

Nevada

7 Bldgs.
Hawthorne Army Ammunition Plant
Hawthorne Co: Mineral NV 89415–
Landholding Agency: Army
Property Number: 219011953, 219011955, 219012061–219012062, 219012106, 219013614, 219230090
Status: Unutilized
Reason: Secured Area.

Bldg. 396
Hawthorne Army Ammunition Plant
Bachelor Enlisted Qtrs W/Dining Facilities
Hawthorne Co: Mineral NV 89415–
Location: East side of Decatur Street-North of Maine Avenue
Landholding Agency: Army
Property Number: 219011997
Status: Unutilized
Reason: Within airport runway clear zone; Secured Area.

51 Bldgs.
Hawthorne Army Ammunition Plant
Hawthorne Co: Mineral NV 89415–
Landholding Agency: Army
Property Number: 219012009, 219012013, 219012021, 219012044, 219013615–219013651, 219013653–219013656, 219013658–219013661, 219013663, 219013655
Status: Underutilized
Reason: Secured Area; (Some within airport runway clear zone; many within 2000 ft. of flammable or explosive material.)

62 Concrete Explo. Mag. Stor.
Hawthorne Army Ammunition Plant
Hawthorne Co: Mineral NV 89415–
Location: North Mag. Area
Landholding Agency: Army
Property Number: 219120150
Status: Unutilized
Reason: Secured Area.

259 Concrete Explo. Mag. Stor.
Hawthorne Army Ammunition Plant
Hawthorne Co: Mineral NV 89415–
Location: South & Central Mag. Areas
Landholding Agency: Army
Property Number: 219120151
Status: Unutilized
Reason: Secured Area.

Facility No. 00A38
Hawthorne Army Ammunition Plant
Hawthorne Co: Mineral NV 89415–
Landholding Agency: Army
Property Number: 219330119
Status: Unutilized
Reason: Extensive deterioration.

New Jersey

217 Bldgs.
Armament Res. Dev. & Eng. Ctr.
Picatinny Arsenal Co: Morris NJ 07806–5000
Location: Route 15 north
Landholding Agency: Army
Property Number: 219010440–219010474, 219010476, 219010478, 219010639–219010667, 219010669–219010721, 219012423–219012424, 219012426–219012428, 219012430–219012431, 219012433–219012466, 219012469–219012472, 219012474–219012475, 219012756–219012760, 219012763–219012767, 219013787, 219014306–219014307, 219014311, 219014313–219014321, 219030269, 219140617, 219230118–219230125, 219240315, 219420001–219420008, 219510002–219510007, 219620476
Status: Excess
Reason: Secured Area; (Most are within 2000 ft. of flammable or explosive material.); (Some are extensively deteriorated.); (Some are in a floodway.)

5 Bldgs.
Fort Monmouth
Wall Co: Monmouth NJ 07719–
Landholding Agency: Army
Property Number: 219420335, 219440206, 219530139–219530141
Status: Unutilized
Reason: Secured Area; (Some are extensively deteriorated.); (Some are in a floodway.)

13 Bldgs., Military Ocean Terminal
Bayonne Co: Hudson NJ 07002–
Landholding Agency: Army
Property Number: 219013890–219013896, 219330141–219330143, 219430001, 219440200, 219520149
Status: Unutilized
Reason: Floodway; Secured Area.

Structure 403B
Armament Research, Dev. & Eng. Center
Picatinny Arsenal Co: Morris NJ 07806–5000
Landholding Agency: Army
Property Number: 219510001
Status: Unutilized
Reason: Drop Tower.

9 Bldgs.
Armament Rsch., Dev. & Eng. Center
Picatinny Arsenal Co: Morris NJ 07806–5000
Landholding Agency: Army
Property Number: 219530142–219530151
Status: Unutilized
Reason: Extensive deterioration; (Most are in a secured area.)

New Mexico

8 Bldgs.
White Sand Missile Range
White Sands Co: Dona Ana NM 88802
Landholding Agency: Army

Property Number: 219330144–219330147, 219430126–219430127, 219530153–219530154
Status: Unutilized
Reason: Extensive Deterioration.

New York

7 Bldgs. Fort Totten
Bayside Co: Queens NY 11357–
Landholding Agency: Army
Property Number: 219210130–219210131, 219430082–219430086
Status: Unutilized
Reason: Extensive deterioration.

Bldgs. 110, 143, 2084, 2105, 2110
Seneca Army Depot
Romulus Co: Seneca NY 14541–5001
Landholding Agency: Army
Property Number: 219240439, 219240440–219240443
Status: Unutilized
Reason: Secured Area; Extensive deterioration.

Bldgs. 124, 1332
U.S. Military Academy
West Point Co: Orange NY 10996
Landholding Agency: Army
Property Number: 219330148, 219610494
Status: Unutilized
Reason: Extensive deterioration.

Bldgs. 3008, Stewart Gardens
Stewart Army Subpost
New Windsor Co: Orange NY 12553
Landholding Agency: Army
Property Number: 219420285
Status: Unutilized
Reason: Extensive deterioration.

Bldg. T–683, Fort Drum
Ft. Drum Co: Jefferson NY 13602
Landholding Agency: Army
Property Number: 219510016
Status: Unutilized
Reason: Secured Area; Extensive deterioration.

North Carolina

48 Bldgs. Fort Bragg
Ft. Bragg Co: Cumberland NC 28307
Landholding Agency: Army
Property Number: 219440295, 219530156–219530165, 219610495–219610527, 219620477–219620480
Status: Unutilized
Reason: Extensive deterioration.

Bldgs. 12, 16
Military Ocean Terminal
Southport Co: Brunswick NC 28461–5000
Landholding Agency: Army
Property Number: 219510015, 219530155
Status: Unutilized
Reason: Secured Area.

Bldgs. P–3437, 4–2402, A–AREA, P–2034
Simmons Army Airfield
Fort Bragg Co: Cumberland NC 28307
Landholding Agency: Army
Property Number: 219620481–219620484
Status: Unutilized
Reason: Extensive deterioration.

Ohio

63 Bldgs.
Ravenna Army Ammunition Plant
Ravenna Co: Portage OH 44266–9297
Landholding Agency: Army
Property Number: 219012476–219012507, 219012509–219012513, 219012515, 219012517–219012518, 219012520, 219012522–219012523, 219012525–219012528, 219012530–219012532, 219012534–219012535, 219012537, 219013670–219013677, 219013781, 219210148
Status: Unutilized
Reason: Secured Area.

12 Bldgs., Ravenna Army Ammunition Plant
Ravenna Co: Portage OH 44266–9297
Landholding Agency: Army
Property Number: 219320399–219320410
Status: Unutilized
Reason: Extensive deterioration.

Bldg. 116
Defense Supply Center, Columbus (DSCC)
Columbus Co: Franklin OH 43216
Landholding Agency: Army
Property Number: 219620491
Status: Unutilized
Reason: Secured Area Extensive deterioration

Oklahoma

546 Bldgs.
McAlester Army Ammunition Plant
McAlester Co: Pittsburg OK 74501–5000
Landholding Agency: Army
Property Number: 219011674, 219011680, 219011684, 219011687, 219012113, 219013981–219013991, 219013994, 219014081–219014102, 219014104, 219014107–219014137, 219014141–219014159, 219014162, 219014165–219014216, 219014218–219014274, 219014336–219014559, 219030007–219030127, 219040004
Status: Underutilized
Reason: Secured Area; (Some are within 2000 ft. of flammable or explosive material).

13 Bldgs.
Fort Sill
Lawton Co: Comanche OK 73503–
Landholding Agency: Army
Property Number: 219140528–219140529, 219140545–219140548, 219140550–219140551, 219320337, 219440309, 219510023, 219610529
Status: Unutilized
Reason: Extensive deterioration.

28 Bldgs.
McAlester Army Ammunition Plant
McAlester Co: Pittsburg OK 74501
Landholding Agency: Army
Property Number: 219310050–219310053, 219320170–219320171, 219330149–219330160, 219430122–219430125, 219620485–219620490
Status: Unutilized
Reason: Secured Area; (Some are extensively deteriorated).

Oregon

11 Bldgs.
Tooele Army Depot
Umatilla Depot Activity
Hermiston Co: Morrow/Umatilla OR 97838–
Landholding Agency: Army
Property Number: 219012174–219012176, 219012178–219012179, 219012190–219012191, 219012197–219012198, 219012217, 219012229
Status: Underutilized
Reason: Secured Area.

24 Bldgs.
Tooele Army Depot
Umatilla Depot Activity
Hermiston Co: Morrow/Umatilla OR 97838–
Landholding Agency: Army
Property Number: 219012177, 219012185–219012186, 219012189, 219012195–219012196, 219012199–219012205, 219012207–219012208, 219012225, 219012279, 219014304–219014305, 219014782, 219030362–219030363, 219120032, 219320201
Status: Unutilized
Reason: Secured Area.

Pennsylvania

Hays Army Ammunition Plant
300 Miffin Road
Pittsburgh Co: Allegheny PA 15207–
Landholding Agency: Army
Property Number: 219011666
Status: Excess
Reason: Secured Area.

Bldg. 82001, Reading USARC
Reading Co: Berks PA 19604–1528
Landholding Agency: Army
Property Number: 219320173
Status: Unutilized
Reason: Extensive deterioration.

16 Bldgs.
Letterkenny Army Depot
Chambersburg Co: Franklin PA 17201
Landholding Agency: Army
Property Number: 219420400, 219430098, 21961053–219610544
Status: Unutilized
Reason: Secured Area; Extensive deterioration.

Bldg. T–685, Carlisle Barracks
Carlisle Co: Cumberland PA 17013
Landholding Agency: Army
Property Number: 219610530
Status: Unutilized
Reason: Extensive deterioration.

South Carolina

64 Bldgs., Fort Jackson
Ft. Jackson Co: Richland SC 29207
Landholding Agency: Army
Property Number: 219440237, 219440239, 219510017, 219530175, 219620306, 219620308–219620312, 219620315–219620368
Status: Unutilized
Reason: Extensive deterioration.

Tennessee

48 Bldgs.
Volunteer Army Ammo. Plant
Chattanooga Co: Hamilton TN 37422–
Landholding Agency: Army
Property Number: 219010475, 219010477, 219010479–219010500, 219240127–219240136, 219420304–219420307, 219430099–219430105, 219610545
Status: Unutilized/Underutilized
Reason: Secured Area; (Some are within 2000 ft. of flammable or explosive material) (Some are extensively deteriorated).

32 Bldgs.
Holston Army Ammunition Plant
Kingsport Co: Hawkins TN 61299–6000
Landholding Agency: Army
Property Number: 219012304–219012309, 219012311–219012312, 219012314, 21901236–219012317, 219012319, 219012325, 219012328, 219012330, 219012332, 219012334–219012335, 219012337, 219013789–219013790, 219030266, 219140613, 219330178,

219440212–219440216, 219510025–219510028
Status: Unutilized
Reason: Secured Area; (Some are within 2000 ft. of flammable or explosive material).

9 Bldgs.
Milan Army Ammunition Plant
Milan Co: Gibson TN 38358
Landholding Agency: Army
Property Number: 219240447–219240449, 219320182–219320184, 219330176–219330177, 219520034
Status: Unutilized
Reason: Secured Area.

Bldg. Z–183A
Milan Army Ammunition Plant
Milan Co: Gibson TN 38358
Landholding Agency: Army
Property Number: 219240783
Status: Unutilized
Reason: Within 2000 ft. of flammable or explosive material.

Texas

Saginaw Army Aircraft Plant
Saginaw Co: Tarrant TX 76079–
Landholding Agency: Army
Property Number: 219011665
Status: Unutilized
Reason: Easement to city of Saginaw for sewer pipeline ending 5/15/2023.

18 Bldgs.
Lone Star Army Ammunition Plant
Highway 82 West
Texarkana Co: Bowie TX 75505–9100
Landholding Agency: Army
Property Number: 219012524, 219012529, 219012533, 219012536, 219012539–219012540, 219012542, 219012544–219012545, 219030337–219030345
Status: Status: Unutilized
Reason: Within 2000 ft. of flammable or explosive material; Secured Area.

95 Bldgs.
Longhorn Army Ammunition Plant
Karnack Co: Harrison TX 75661–
Location: State highway 43 north
Landholding Agency: Army
Property Number: 219012546, 219012548, 219610553–219610584, 219610635, 219620243–219620291, 219620827–219620837
Status: Unutilized
Reason: Secured Area; (Most are within 2000 ft. of flammable or explosive material).

33 Bldgs., Red River Army Depot
Texarkana Co: Bowie TX 75507–5000
Landholding Agency: Army
Property Number: 219120064, 219130002, 219140255, 219230109–219230115, 219320193–219320194, 219330163, 219420314–219420327, 219430093–219430097, 219440217
Status: Unutilized
Reason: Secured Area; (Some are extensively deteriorated).

Bldg. T–5000
Camp Bullis
San Antonio Co: Bexar TX 78234–5000
Landholding Agency: Army
Property Number: 219220100
Status: Underutilized
Reason: Within 2000 ft. of flammable or explosive material.

Swimming Pools

Fort Bliss
El Paso Co: El Paso TX 79916
Landholding Agency: Army
Property Number: 219230108
Status: Unutilized
Reason: Extensive deterioration.

23 Bldgs., Fort Hood
Ft. Hood Co: Bell TX 76544
Landholding Agency: Army
Property Number: 219340238, 219520061, 219610546–219610547, 219610585
Status: Unutilized
Reason: Extensive deterioration.

7 Bldgs., Fort Sam Houston
San Antonio Co: Bexar TX 78234–5000
Landholding Agency: Army
Property Number: 219330473, 219340095, 219530176–219530177, 219610549–219610551
Status: Unutilized
Reason: Extensive deterioration.

Bldgs. T–2916, T–3180, T–3192, T–3398
Fort Sam Houston
San Antonio Co: Bexar TX 78234–5000
Landholding Agency: Army
Property Number: 219330476–219330479
Status: Unutilized
Reason: Detached latrines.

Bldgs. 2027, 2443, Fort Bliss
El Paso Co: El Paso TX 79916
Landholding Agency: Army
Property Number: 219620238–219620239
Status: Unutilized
Reason: Extensive deterioration.

Utah

3 Bldgs.
Tooele Army Depot
Tooele Co: Tooele UT 84074–5008
Landholding Agency: Army
Property Number: 219012153, 219012166, 219030366
Status: Unutilized
Reason: Secured area.

11 Bldgs.
Tooele Army Depot
Tooele Co: Tooele UT 84074–5008
Landholding Agency: Army
Property Number: 219012143–219012144, 219012148–219012149, 219012152, 219012155, 219012156, 219012158, 219012742, 219012751, 219240267
Status: Underutilized
Reason: Secured area.

7 Bldgs.
Dugway Proving Ground
Dugway Co: Toole UT 84022–
Landholding Agency: Army
Property Number: 219013997, 219130011–219130012, 219130015–219130018
Status: Underutilized
Reason: Secured area.

7 Bldgs.
Dugway Proving Ground
Dugway Co: Toole UT 84022–
Landholding Agency: Army
Property Number: 219330181–219330185, 219420328–219420329
Status: Unutilized
Reason: Secured area.

Bldg. 4520
Tooele Army Depot, South Area
Tooele Co: Tooele UT 84074–5008
Landholding Agency: Army
Property Number: 219240268
Status: Unutilized
Reason: Extensive deterioration.

Virginia

175 Bldgs.
Radford Army Ammunition Plant
Radford Co: Montgomery VA 24141–
Location: State Highway 114
Landholding Agency: Army
Property Number: 219010833, 219010836, 219010839, 219010842, 219010844, 219010847–219010890, 219010892–219010912, 219011521–219011577, 219011581–219011583, 219011585, 219011588, 219011591, 219013559–219013570, 219110142–219110143, 219120071, 219140618–219140633, 219440219–219440225, 219510031–219510033, 219610607–219610608
Status: Unutilized
Reason: Within 2000 ft. of flammable or explosive material; Secured area.

13 Bldgs.
Radford Army Ammunition Plant
Radford Co: Montgomery VA 24141–
Location: State Highway 114
Landholding Agency: Army
Property Number: 219010834–219010835, 219010837–219010838, 219010840–219010841, 219010843, 219010845–219010846, 219010891, 219011578–219011580
Status: Unutilized
Reason: Within 2000 ft. of flammable or explosive material; Secured area; Latrine, detached structure.

98 Bldgs.
U.S. Army Combined Arms Support Command
Fort Lee Co: Prince George VA 23801–
Landholding Agency: Army
Property Number: 219220314, 219240096, 21240107, 219330191–219330212, 219330219–219330228, 219520062, 219610589–219610598, 219620497–219620508, 219620838–219620877
Status: Unutilized
Reason: Extensive deterioration (Some are in a secured area.)

16 Bldgs.
Radford Army Ammunition Plant
Radford VA 24141
Landholding Agency: Army
Property Number: 219220210–219220218, 219230100–219230103, 219520037
Status: Unutilized
Reason: Secured Area.

2 Bldgs., Fort A.P. Hill
Bowling Co: Caroline VA 22427
Landholding Agency: Army
Property Number: 219240313–219240314
Status: Underutilized
Reason: Detached latrines.

Bldg. B7103–01, Motor House
Radford Army Ammunition Plant
Radford VA 24141
Landholding Agency: Army
Property Number: 219240324
Status: Unutilized
Reason: Secured Area; Within 2000 ft. of flammable or explosive material; Extensive deterioration.

Bldg. TT0868, Fort Pickett
Blackstone Co: Nottoway VA 23824
Landholding Agency: Army

Property Number: 219310143
Status: Unutilized
Reason: Extensive deterioration.

Bldg. 171 Fort Monroe
Ft. Monroe VA 23651
Landholding Agency: Army
Property Number: 219520051
Status: Unutilized
Reason: Extensive Deterioration.

56 Bldgs.
Red Water Field Office
Radford Army Ammunition Plant
Radford VA 24141
Landholding Agency: Army
Property Number: 219430341–219430396
Status: Unutilized
Reason: Within 2000 ft. of flammable or explosive material; Secured Area.

Bldgs. SS1238, TT806
Fort A.P. Hill
Bowling Green Co: Caroline VA 22427
Landholding Agency: Army
Property Number: 219510030, 219610588
Status: Underutilized
Reason: Secured Area; Extensive deterioration.

Bldgs. 2013–00, B2013–00, A1601–00
Radford Army Ammunition Plant
Radford VA 24141
Landholding Agency: Army
Property Number: 219520052, 219530194
Status: Unutilized
Reason: Extensive deterioration.

Bldgs. 627, 822, Fort Eustis
Ft. Eustis VA 23604
Landholding Agency: Army
Property Number: 219610586–219610587
Status: Unutilized
Reason: Extensive deterioration.

Bldgs. 1426–1418, 1430–1431
Fort Belvoir
Ft. Belvoir Co: Fairfax VA 22060–5116
Landholding Agency: Army
Property Number: 219610609–219610610
Status: Unutilized
Reason: Extensive deterioration.

Washington

56 Bldgs., Fort Lewis
Ft. Lewis Co: Pierce WA 98433–5000
Landholding Agency: Army
Property Number: 219440233–219440234, 219510036, 219510039, 219610001–219610031, 219610035, 219610039–219610048, 219610264, 219620509–219620517
Status: Unutilized
Reason: Secured Area; Extensive deterioration.

Bldgs. 524, 538, 539
Ft. Lawton
Seattle Co: King WA 98199
Landholding Agency: Army
Property Number: 219430130
Status: Unutilized
Reason: Secured Area; Extensive deterioration.

Wisconsin

6 Bldgs.
Badger Army Ammunition Plant
Baraboo Co: Sauk WI 53913–
Landholding Agency: Army
Property Number: 219011094, 219011209–219011212, 219011217
Status: Underutilized
Reason: Within 2000 ft. of flammable or explosive material; Other environmental; Secured Area
Comment: Friable asbestos.

154 Bldgs.
Badger Army Ammunition Plant
Baraboo Co: Sauk WI 53913–
Landholding Agency: Army
Property Number: 219011104, 219011106, 219011108–219011113, 219011115–219011117, 219011119–219011120, 219011122–219011139, 219011141–219011142, 219011144, 219011148–219011208, 219011213–219011216, 219011218–219011234, 219011236, 219011238, 219011240, 219011242, 219011244, 219011247, 219011249, 219011251, 219011254, 219011256, 219011259, 219011263, 219011265, 219011268, 219011270, 219011275, 219011277, 219011280, 219011282, 219011284, 219011286, 219011290, 219011293, 219011295, 219011297, 219011300, 219011302, 219011304–219011311, 219011317, 219011319–219011321, 219011323
Status: Unutilized
Reason: Within 2000 ft. of flammable or explosive material; Other environmental; Secured Area.
Comment: friable asbestos.

4 Bldgs.
Badger Army Ammunition Plant
Baraboo Co: Sauk WI
Landholding Agency: Army
Property Number: 219013871–219013873, 219013875
Status: Underutilized
Reason: Secured Area.

31 Bldgs.
Badger Army Ammunition Plant
Baraboo Co: Sauk WI
Landholding Agency: Army
Property Number: 219013876–219013878, 219220295–219220311, 219510058–219510068
Status: Unutilized
Reason: Secured Area.

Bldgs. 6513–27, 6823–2, 6861–4
Badger Army Ammunition Plant
Baraboo Co: Sauk WI 53913–
Landholding Agency: Army
Property Number: 219210097–219210099
Status: Unutilized
Reason: Within 2000 ft. of flammable or explosive material; Secured Area.

79 Bldgs., Fort McCoy
US Hwy. 21
Ft. McCoy Co: Monroe WI 54656–
Landholding Agency: Army
Property Number: 219210115, 219240206–219240243, 219240256, 219240258–219240262, 219310208–219310225, 219610611–219610612, 219620292–219620305
Status: Unutilized
Reason: Extensive deterioration.

Bldg. 6513–3
Badger Army Ammunition Plant
Baraboo Co: Sauk WI 53913–
Landholding Agency: Army
Property Number: 219510057
Status: Unutilized
Reason: Detached Latrine.

124 Bldgs.
Badger Army Ammunition Plant
Baraboo Co: Sauk WI 53913–
Landholding Agency: Army
Property Number: 219510069–219510077
Status: Unutilized
Reason: Secured Area; Extensive deterioration.

Land (by State)

Alabama

23 acres and 2284 acres
Alabama Army Ammunition Plant
110 Hwy. 235
Childersburg Co: Talladega AL 35044–
Landholding Agency: Army
Property Number: 219210095–219210096
Status: Excess
Reason: Secured Area.

3.152 Acres
Anniston Army Depot
Anniston Co: Calhoun AL 36201–
Landholding Agency: Army
Property Number: 219530004
Status: Unutilized
Reason: Secured Area.

Alaska

Campbell Creek Range
Fort Richardson
Anchorage Co: Greater Anchorage AK 99507–
Landholding Agency: Army
Property Number: 219230188
Status: Unutilized
Reason: Inaccessible.

Illinois

Group 66A
Joliet Army Ammunition Plant
Joliet Co: Will IL 60436–
Landholding Agency: Army
Property Number: 219010414
Status: Unutilized
Reason: Within 2000 ft. of flammable or explosive material; Secured Area.

Parcel 1
Joliet Army Ammunition Plant
Joliet Co: Will IL 60436–
Location: South of the 811 Magazine Area, adjacent to the River Road.
Landholding Agency: Army
Property Number: 219012810
Status: Excess
Reason: Within 2000 ft. of flammable or explosive material; Floodway.

Parcel No. 2, 3
Joliet Army Ammunition Plant
Joliet Co: Will IL 60436–
Landholding Agency: Army
Property Number: 219013796–219013797
Status: Underutilized
Reason: Within 2000 ft. of flammable or explosive material; Floodway.

Parcel No. 4, 5, 6
Joliet Army Ammunition Plant
Joliet Co: Will IL 60436–
Landholding Agency: Army
Property Number: 219013798–219013800
Status: Unutilized
Reason: Within 2000 ft. of flammable or explosive material; Floodway.

Homewood USAR Center
18760 S. Halsted Street
Homewood Co: Cook IL 60430–
Landholding Agency: Army
Property Number: 219014067

Status: Underutilized
Reason: Secured Area.

38,000 sq. ft. & 4,000 sq. ft. of Land
Rock Island Arsenal
South Shore Moline Pool Miss. River
Moline Co: Rock Island IL 61299–5000
Landholding Agency: Army
Property Number: 219240317–219240318
Status: Unutilized
Reason: Floodway.

Indiana

Newport Army Ammunition Plant
East of 14th St. & North of S. Blvd.
Newport Co: Vermillion IN 47966–
Landholding Agency: Army
Property Number: 219012360
Status: Unutilized
Reason: Within 2000 ft. of flammable or explosive material; Secured Area.

Land—Plant 2
Indiana Army Ammunition Plant
Charlestown Co: Clark IN 47111–
Landholding Agency: Army
Property Number: 219330095
Status: Unutilized
Reason: Within 2000 ft. of flammable or explosive material.

Maryland

Carroll Island, Graces Quarters
Aberdeen Proving Ground
Edgewood Area
Aberdeen City Co: Harford MD 21010–5425
Landholding Agency: Army
Property Number: 219012630–219012632
Status: Underutilized
Reason: Floodway; Secured Area.

Minnesota

Portion of R.R. Spur
Twin Cities Army Ammunition Plant
New Brighton Co: Ramsey MN 55112–
Landholding Agency: Army
Property Number: 219620472
Status: Unutilized
Reason: Landlocked.

New Jersey

Land
Armament Research Development & Eng. Center
Route 15 North
Picatinny Arsenal Co: Morris NJ 07806–
Landholding Agency: Army
Property Number: 219013788
Status: Unutilized
Reason: Secured Area.

Spur Line/Right of Way
Armament Rsch., Dev. & Eng. Center
Picatinny Arsenal Co: Morris NJ 07806–5000
Landholding Agency: Army
Property Number: 219530143
Status: Unutilized
Reason: Floodway.

Oklahoma

McAlester Army Ammo. Plant
McAlester Army Ammunition Plant
McAlester Co: Pittsburg OK 74501–
Landholding Agency: Army
Property Number: 219014603
Status: Underutilized
Reason: Within 2000 ft. of flammable or explosive material.

Texas

Land—Approx. 50 acres
Lone Star Army Ammunition Plant
Texarkana Co: Bowie TX 75505–9100
Landholding Agency: Army
Property Number: 219420308
Status: Unutilized
Reason: Secured Area.

Land—all of block 1800
Fort Sam Houston
Portions of 1900, 3100, 3200
San Antonio Co: Bexar TX 78234–5000
Landholding Agency: Army
Property Number: 219530184
Status: Excess
Reason: Floodway.

Virginia

Fort Belvoir Military Reservation–5.6 Acres
South Post located West of Pohick Road
Fort Belvoir Co: Fairfax VA 22060–
Location: Rightside of King Road
Landholding Agency: Army
Property Number: 219012550
Status: Unutilized
Reason: Within airport runway clear zone; Secured Area.

Wisconsin

Land
Badger Army Ammunition Plant
Baraboo Co: Sauk WI 53913–
Location: Vacant land within plant boundaries.
Landholding Agency: Army
Property Number: 219013783
Status: Unutilized
Reason: Secured Area.

[FR Doc. 96–22615 Filed 9–5–96; 8:45 am]

BILLING CODE 4210–29–M

DEPARTMENT OF THE INTERIOR

Fish and Wildlife Service

Notice of Receipt of Application for Permit

The following applicants have applied for a permit to conduct certain activities with endangered species. This notice is provided pursuant to Section 10(c) of the Endangered Species Act of 1973, as amended (16 U.S.C. 1531 *et seq.*):

PRT–818775

Applicant: Ken Gordon, Mississippi Natural Heritage Program, Jackson, Mississippi.

The applicant requests a permit to take (survey and collect voucher specimens) the endangered plants, Louisiana quillwort, *Isoetes louisianensis,* and American chaffseed, *Schwalbea americana,* on Camp Shelby and adjacent DeSoto National Forest, Forrest, Perry, and Greene Counties, Mississippi for the purpose of enhancement of survival of the species.

PRT–818777

Applicant: Dr. Sam W. Rosso, The University of Southern Mississippi, Hattiesburg, Mississippi.

The applicant requests a permit to take (survey and collect specimens for study) the endangered plant, Louisiana quillwort, *Isoetes louisianensis,* on Camp Shelby and adjacent DeSoto National Forest, Forrest, Perry, and Greene Counties, Mississippi for the purpose of enhancement of survival of the species.

PRT–818715

Applicant: R. Timothy Davis, Environmental Services, Inc., Jacksonville, Florida.

The applicant requests a permit to take (capture, band, and translocate) red-cockaded woodpeckers, *Picoides borealis,* throughout the species range in North Carolina, South Carolina, Georgia, and Florida for the purpose of enhancement of survival of the species.

PRT–818721

Applicant: Susanne Shipper, Jamestown, South Carolina.

The applicant requests a permit to take (capture, band, and install artificial cavities and cavity restrictors) red-cockaded woodpeckers, *Picoides borealis,* at Shaw Air Force Base, Sumter, South Carolina for the purpose of enhancement of survival of the species.

Written data or comments on these applications should be submitted to: Regional Permit Coordinator, U.S. Fish and Wildlife Service, 1875 Century Boulevard, Suite 200, Atlanta, Georgia 30345. All data and comments must be received within 30 days of the date of this publication.

Documents and other information submitted with these applications are available for review, subject to the requirements of the Privacy Act and Freedom of Information Act, by any party who submits a written request for a copy of such documents to the following office within 30 days of the date of publication of this notice: U.S. Fish and Wildlife Service, 1875 Century Boulevard, Suite 200, Atlanta, Georgia 30345 (Attn: David Dell, Permit Biologist). Telephone: 404/679–7313; Fax: 404/679–7081.

Dated: August 29, 1996.

Noreen K. Clough,

Regional Director.

[FR Doc. 96–22810 Filed 9–5–96; 8:45 am]

BILLING CODE 4310–55–M

Bureau of Land Management

[CO–010–06–1020–00–241A]

Northwest Colorado Resource Advisory Council Meeting

AGENCY: Bureau of Land Management, Interior.

ACTION: Notice of meeting.

SUMMARY: Notice is hereby given that the next meeting of the Northwest Colorado Resource Advisory Council will be held on September 20, 1996.

DATES: The meeting is scheduled for Friday, September 20, 1996 in Rifle, Colorado.

ADDRESSES: For further information, contact Lynda Boody, Bureau of Land Management (BLM), Grand Junction District Office, 2815 H Road, Grand Junction, Colorado 81506; Telephone (970) 244–3000; TDD (970) 244–3011.

SUPPLEMENTARY INFORMATION: The meeting is scheduled to begin at 9:00 a.m.

This meeting will be held at the U.S. Forest Service Office, Rifle Ranger District, 0094 County Road 244, Rifle, CO 81650.

The agenda for this meeting will focus on general Council business, issues with which the Council would like to become involved, new business, and committee reports.

All Resource Advisory Council meetings are open to the public. Interested persons may make oral statements to the Council, or written statements may be submitted for the Council's consideration. Public comment will be taken throughout the meeting. Depending on the number of persons wishing to make oral statements, a per-person time limit may be established by the Grand Junction/Craig District Manager.

Summary minutes for the Council meeting will be maintained in the Grand Junction and Craig District Offices and will be available for public inspection and reproduction during regular business hours within thirty (30) days following the meeting.

Dated: August 26, 1996.

Mark Morse,

Grand Junction/Craig District Manager.

[FR Doc. 96–22817 Filed 9–5–96; 8:45 am]

BILLING CODE 4310–70–M

[MT–960–1990–00]

Resource Advisory Council Meeting, Butte, MT

AGENCY: Butte District Office, Bureau of Land Management, Interior.

ACTION: Notice of Butte District Resource Advisory Council Meeting, Butte, Montana.

SUMMARY: The Council will convene at 1:00 PM on Thursday, October 3 and continue through Friday, October 4, 1996 to discuss the Westslope Cutthroat Trout, Abandoned Mine Reclamation in western Montana, Land Exchanges, and the draft Standards and Guidelines EIS comments.

The meeting will be held at the Dillon Resource Area Office, 1005 Selway Drive, Dillon, Montana.

The meeting is open to the public and written comments may be given to the Council. Oral comments may be presented to the Council at 3 PM on October 3. The time allotted for oral comment may be limited, depending on the number of persons wishing to be heard. Individuals who plan to attend and need further information about the meeting; or need special assistance, such as sign language or other reasonable accommodations, should contact the Butte District, 106 North Parkmont (PO Box 3388), Butte, Montana 59702–3388; telephone 406–494–5059.

FOR FURTHER INFORMATION CONTACT: Jim Owings at the above address or telephone number.

Dated: August 27, 1996.

Michele D. Good,

Acting District Manager.

[FR Doc. 96–22819 Filed 9–5–96; 8:45 am]

BILLING CODE 4310–DN–M

[MT–060–06–1020–00]

Montana Off-Road Vehicle Designation

AGENCY: Department of the Interior, Bureau of Land Management.

ACTION: Notice to limit off-road vehicle use on public lands.

SUMMARY: Notice is hereby given that beginning September 1, 1996, the use of off-road vehicles (OR) is limited on public lands within the Pike Creek Block Management Area in southern Petroleum County, Montana. This will be in effect during the bird and big game hunting seasons as established by the Montana Fish, Wildlife and Parks Commission in accordance with the authority and requirements of regulation 43 CAR 8364.1.

DATES: This designation will be in effect between September 1, and December 1.

FOR FURTHER INFORMATION CONTACT: Chuck Otto, Judith Resource Area Manager, Bureau of Land Management, P.O. Box 1160, Airport Road, Lewistown, MT 59457.

SUPPLEMENTARY INFORMATION: This block management area includes 37,120 acres in three units (North, South and South Zimmerman). The public land is administered by the BLM, Judith Resource Area, Lewistown District. This designation is the result of analysis completed in the Judith, Valley, Phillips Resource Management Plan of 1994, and will be implemented as a cooperative effort among private landowners; Montana Fish, Wildlife and Parks; Montana Department of Natural Resources and Conservation; and the BLM. The purpose of this designation is to prevent damage to soil, vegetation and scenic resources; to open additional private and state lands for hunting; and to reduce landowner/recreationist conflicts so as to provide a higher quality hunt.

The off-road vehicle limitation area is located in southern Petroleum County, Montana.

Dated: August 26, 1996.

David L. Mari,

District Manager.

[FR Doc. 96–22818 Filed 9–5–96; 8:45 am]

BILLING CODE 4310–DN–M

[WY–989–1050–00–P]

Filing of Plats Survey; Wyoming

AGENCY: Bureau of Land Management, Interior.

ACTION: Notice.

SUMMARY: The plats of survey of the following described lands are scheduled to be officially filed in the Wyoming State Office, Cheyenne, Wyoming, thirty (30) calendar days from the date of this publication.

Sixth Principal Meridian, Wyoming

T. 22 N., R. 101 W., accepted July 15, 1996
T. 16 N., R. 83 W., accepted August 8, 1996
T. 56 N., R. 95 W., accepted August 8, 1996
T. 49 N., R. 72 W., accepted August 16, 1996
T. 17 N., R. 93 W., accepted August 16, 1996
T. 27 N., R. 71 W., accepted August 26, 1996

If protests against a survey, as shown on any of the above plats, are received prior to the official filing, the filing will be stayed pending consideration of the protest(s) and or appeal(s). A plat will not be officially filed until after disposition of protest(s) and or appeal(s).

These plats will be placed in the open files of the Wyoming State Office, Bureau of Land management, 5353 Yellowstone Road, Cheyenne, Wyoming, and will be available to the public as a matter of information only. Copies of the plats will be made available upon request and prepayment of the reproduction fee of $1.10 per copy.

A person or party who wishes to protest a survey must file with the State Director, Bureau of Land Management, Cheyenne, Wyoming, a notice of protest prior to thirty (30) calendar days from the date of this publication. If the protest notice did not include a

statement of reasons for the protest, the protestant shall file such a statement with the State Director within thirty (30) calendar days after the notice of protest was filed.

The above-listed plats represent dependent resurveys, subdivision of sections.

FOR FURTHER INFORMATION CONTACT: Bureau of Land Management, P.O. Box 1828, 5353 Yellowstone Road, Cheyenne, Wyoming 82003.

Dated: August 27, 1996.

John P. Lee,

Chief, Cadastral Survey Group.

[FR Doc. 96–22816 Filed 9–5–96; 8:45 am]

BILLING CODE 4310–22–M

Minerals Management Service

Information Collection Activities: Proposed Collection; Comment Request

AGENCY: Minerals Management Service, DOI.

ACTION: Notice of information collection solicitation.

SUMMARY: Under the Paperwork Reduction Act of 1995, the Minerals Management Service (MMS) is soliciting comments on an information collection for Requests to Exceed Regulatory Allowance Limitation.

DATES: Written comments should be received on or before November 5, 1996.

ADDRESSES: Comments sent via the U.S. Postal Service should be sent to: Minerals Management Service, Royalty Management Program, Rules and Procedures Staff, P.O. Box 25165, MS 3101, Denver, Colorado, 80225–0165; courier address is: Building 85, Room A–212, Denver Federal Center, Denver, Colorado 80225; e:Mail address is: David__Guzy@smtp.mms.gov.

FOR FURTHER INFORMATION CONTACT: Dennis C. Jones, Rules and Procedures Staff, phone (303) 231–3046, FAX (303) 231–3194, e-Mail Dennis__Jones@smtp.mms.gov.

SUPPLEMENTARY INFORMATION: In compliance with the requirements of Section 3506(c)(2)(A) of the Paperwork Reduction Act of 1995, each agency shall provide notice and otherwise consult with members of the public and affected agencies concerning collection of information in order to solicit comments to: (a) Evaluate whether the proposed collection of information is necessary for the proper performance of the functions of the agency, including whether the information shall have practical utility; (b) evaluate the accuracy of the agency's estimate of the burden of the proposed collection of information; (c) enhance the quality, utility, and clarity of the information to be collected; and (d) minimize the burden of the collection of information on those who are to respond, including through the use of automated collection techniques or other forms of information technology.

The Minerals Management Service (MMS) Royalty Management Program (RMP) is requesting the continuation of a collection of information to be used by royalty payors on Federal or Indian mineral leases. The payors use the form when requesting MMS approval to exceed established transportation or processing allowance limits. Use of the form will not place any additional burden on payors.

Under certain circumstances lessees are authorized to deduct from royalty payments the reasonable actual costs of transporting the royalty portion of produced oil and gas from the lease to a processing or sales point not in the immediate lease area. When gas is processed for the recovery of gas plant products, lessees may claim a processing allowance. Transportation and processing allowances are a part of the product valuation process which MMS uses to determine if the lessee is reporting and paying the proper royalty amount.

MMS performs the royalty management functions for the Secretary of the Interior, who is responsible for the collection of royalties from lessees who produce minerals from leased Federal and Indian lands. The Secretary is required by various laws to manage the production of mineral resources on Federal and Indian lands, to collect the royalties due, and to distribute the funds in accordance with those laws. The Secretary is authorized to prescribe rules and regulations in order to administer the provisions of laws pertaining to mineral leases on Federal and Indian land and the Outer Continental Shelf. Applicable citations include: 30 U.S.C. 189, pertaining to Public Lands; 30 U.S.C. 359, pertaining to Acquired Lands; 43 U.S.C. 1334, pertaining to Outer Continental Shelf Lands; 25 U.S.C. 396d, pertaining to Indian Lands; and 30 U.S.C. 1713, pertaining to oil and gas from Public and Indian Lands.

Regulations at 30 CFR 206 establish uniform product valuation and allowance policies for all Federal and Indian leases. These regulations require information in support of the product valuation or allowances being claimed. Without such information, MMS cannot evaluate the amount of royalties being paid or the amount of allowances being claimed.

Regulations at 30 CFR 206.104(b)(1) and 206.156 (c)(1) establish the limit on transportation allowance deductions for oil and gas at 50 percent of the value of the oil or gas at the point of sale. Regulations at 30 CFR 206.104(b)(2) and 206.156(c)(3) provide that MMS may approve a transportation allowance in excess of 50 percent upon proper application from the royalty payor.

Similar regulations at 30 CFR 206.158(c)(2) establish 66⅔ percent of the value of each gas plant product as the limit on the allowable gas processing deduction, while 30 CFR 206.158(c)(3) provides for the approval of a gas processing allowance in excess of 66⅔ percent when properly requested by the payor.

To request permission to exceed an allowance limit, royalty payors must write a letter to MMS providing the reasons why a higher allowance limit is necessary. Although the request to exceed an allowance limit is voluntary on the part of the payors and results in a benefit to them, many times payors have not provided all of the data needed by MMS to approve or deny a request. The followup necessary to obtain required information creates an additional burden for both the payor and the Government.

The use of form MMS–4393, included with the payor's request, ensures that MMS receives the lease data required to make a decision on the request by including the Accounting Identification Number (AID) identifying the lease, the product code identifying the product being transported or processed, and the selling arrangement used to identify the marketing outlet for the product. These are the necessary data that have been missing from many of the requests in the past. The use of Form MMS–4393 reduces the time required for most payors to clarify a request to exceed allowance rates, and reduces the time required by the Government to process the request.

Costs for performing this collection of information are based on time estimated for the payor to provide the information requested on Form MMS–4393. The form will be completed once a year, if necessary, for each of about 50 allowance requests. Completing the form is expected to average one half hour at a cost of $25 per hour.

Annual burden costs: 50 requests×½ hour×$25=$625.00

Annual burden hours: 50 requests×½ hour=25 hours.

Dated: August 29, 1996.

James W. Shaw,

Associate Director for Royalty Management.

[FR Doc. 96–22764 Filed 9–5–96; 8:45 am]

BILLING CODE 4310–MR–P

Agency Information Collection Activities: Submission for Office of Management and Budget Review; Comment Request

AGENCY: Mineral Management Service (MMS), Interior.

ACTION: Notice of extension of a currently approved collection.

SUMMARY: The Department of the Interior has submitted a proposal for the collection of information listed below to the Office of Management and Budget (OMB) for approval under the provisions of the Paperwork Reduction Act of 1995 (Act). The act requires that OMB provide interested Federal agencies and the public an opportunity to comment on information collection requests. The act also provides that an agency may not conduct or sponsor, and you are not required to respond to, a collection of information unless it displays a currently valid OMB control number.

DATES: Submit written comments by October 7, 1996.

ADDRESSES: Submit comments and suggestions directly to the Office of Information and Regulatory Affairs, OMB, Attention: Desk Officer for the Department of the Interior (1010–0071), Washington, D.C. 20503.

Send a copy of your comments to the Chief, Engineering and Standards Branch, Mail Stop 4700, Minerals Management Service, 381 Elden Street, Herndon, Virginia 20170–4817.

FOR FURTHER INFORMATION CONTACT: Alexis London, Engineering and Standards Branch, Minerals Management Service, telephone (703) 787–1600. You may obtain copies of the proposed collection of information by contacting MMS's Clearance Officer at (703) 787–1242.

SUPPLEMENTARY INFORMATION:

Title: 30 CFR Part 203, Relief or Reduction in Royalty Rates.

OMB Number: 1010–0071.

Abstract: The Outer Continental Shelf Lands Act (OCSLA) and the Deep Water Royalty Relief Act (DWRRA) give the Secretary of the Interior the authority to reduce or eliminate royalty or any net profit share set forth in Outer Continental Shelf (OCS) oil and gas leases to promote increased production. The MMS interim final rule established the terms and conditions for granting reductions in royalty rates under the OCSLA and royalty suspension volumes under the DWRRA for certain leases in existence before November 28, 1995. It also defines the information required for a complete application as required by 43 U.S.C. 1337(a)(3)(C). The interim final rule was published in the Federal Register on May 31, 1996 (61 FR 27263). The comment period has been extended to September 30, 1996 (61 FR 40734).

MMS will use the information to determine whether granting a royalty relief request will result in the production of resources that would not be produced without such relief. An application for royalty relief must contain sufficient financial, economic, reservoir, geologic and geophysical, production, and engineering data and information for MMS to determine whether relief should be granted according to applicable law. The Application also must be sufficient to determine whether the requested relief will result in an ultimate increase in resource recovery and receipts to the Federal Treasury and provide for reasonable returns on project investments. The applicant's requirement to respond is related only to a request to obtain royalty relief. The applicant has no obligation to make such a request.

Description of Respondents: Federal OCS oil and gas leases.

Frequency: On occasion.

Estimated Number of Respondents: 130 respondents making an estimated 52 applications per year.

Estimated Total Annual Burden on Respondents: 34,530 burden hours.

Estimate of Total Other Annual Costs to Respondents:

(a) Application processing cost: average $21,800 per application for an estimated burden of $1,133,600.

(b) Some applications will require a report prepared by an independent certified public accountant: average $87,500 per application for an estimated burden of $3,587,500.

Type of Request: Extension of currently approved collection.

Form Number: N/A.

Comments: The OMB is required to make a decision concerning the proposed collection of information between 30 and 60 days after publication of this notice in the Federal Register. Therefore, a comment to OMB is best ensured of having its full effect if OMB receives it by no later than October 7, 1996.

Bureau Clearance Officer: Carole deWitt (703) 787–1242.

Dated: August 15, 1996.

E.P. Danenberger,

Acting Deputy Associate Director for Operations and Safety Management.

[FR Doc. 96–22820 Filed 9–5–96; 8:45 am]

BILLING CODE 4310–MR–M

National Park Service

Record of Decision, Pictured Rocks National Lakeshore; Final Environmental Impact Statement: Beaver Basin Rim Road

Introduction

Pursuant to regulations promulgated by the Council on Environmental Quality (40 CFR Section 1505.2) and the implementing procedures of the National Park Service for the National Environmental Policy Act of 1969 (40 USC 1501 *et seq.*), the National Park Service has prepared this *Record of Decision* with respect to the *Final Environmental Impact Statement: Beaver Basin Rim Road,* Pictured Rocks National Lakeshore, Michigan.

This Record of Decision describes the road provision alternatives that were considered, mitigating measures adopted to avoid or minimize environmental impacts, and the decision reached.

Decision

The National Park Service adopts the proposed (preferred) alternative (Alternative B), which is to construct a two-lane paved road of approximately 13 miles length within the shoreline zone of the Pictured Rocks National Lakeshore.

The road would run from the vicinity of Legion Lake near the intersection of the Little Beaver Campground entrance road with Alger County Road H–58 northeasterly to near the Twelvemile Beach Campground entrance road intersection with Alger County H–58. The road impact on the environment would be minimal.

In constructing the road as described under Alternative B, the National Park Service would be complying with the direction of the Congress as stipulated in Public Law 89–668 [80 Stat. 922 sec. 6(b)(1)] to provide a scenic drive within the shoreline zone of the national lakeshore. The adopted alternative is consistent with this congressional mandate and would implement the management directions of the *General Management Plan, Pictured Rocks National Lakeshore (NPS, USDI 1981).* The National Park Service takes the position that, in the absence of environmental impacts precluding construction of the road, it must comply

with this express congressional direction, and that it should implement the related provisions of the 1981 *General Management Plan*.

In issuing this decision, the National Park Service recognizes that there is considerable public opposition to this action despite the findings of the environmental impact analysis and the congressional direction to construct the scenic shoreline drive. In response to that opposition and efforts of members of the 104th Congress to eliminate by means of amendatory legislation the congressionally mandated scenic drive, the National Park Service will take no immediate action to implement this project. If legislation in the form of an amendment to P.L. 89–688 (section 6 (b)(1)) is enacted, the National Park Service will revise the general management plan for Pictured Rocks National Lakeshore to be consistent with the direction of such legislation.

Alternatives Considered

The environmental impact statement analyzed three road provision alternatives. Alternative A: No Action (Continuation of Existing Conditions), Alternative B: Shoreline Zone Corridor (Proposed Action), and Alternative C: Inland Buffer Zone Corridor.

The environmental impact statement considered and eliminated from further consideration three other alternatives for the location and design of the shoreline road. These three alternatives were offered during preparation of the environmental impact statement: (1) Upgrading County Road H–58, (2) Construct a Paved Trail, and (3) Construct a Gravel Road. The upgrading of County Road H–58 had been previously evaluated and rejected as alternative 3 in the environmental assessment prepared in 1981 for the *General Management Plan, Pictured Rocks National Lakeshore.*

Alternative B: Shoreline Zone Corridor (Proposed Action)

Construction activities associated with the adopted alternative would directly affect 82 acres of mixed northern hardwood and pinelands forest vegetation. Of the 82 acres, 47 would be replanted with grasses and forbs upon completion of the road. Another two acres would be cleared for two scenic overlooks of the Beaver Basin area of the park. The road corridor is entirely within the shoreline zone on lands owned by the National Park Service. No land acquisition would be required. Most of the road would be located 400 feet or more back (south and east) of the Beaver Basin Rim. Existing old road traces totaling about 5 percent of the entire road would be used wherever possible. Two spur roads would be constructed off the main road to two overlooks that would provide views of Beaver Basin, Beaver Lake, Grand Portal Point, Lake Superior, and the Sevenmile Creek area.

There are no threatened or endangered species affected. However, the National Park Service would undertake further section 7(c) of the Endangered Species Act consultation with the U.S. Fish and Wildlife Service with respect to potential impacts on the eastern timber wolf, in particular, and other species prior to the initiation of any construction activity.

Due to the road construction, there would be a temporary, minor effect on air quality and a temporary, major increase in noise levels. Also, there would be minor increases in pollutants from automobile and bus traffic and a minor to moderate increase in noise due to projected use of the new road. There would be a minor overall impact on park soils and vegetation resulting from construction of the main road, spur roads, parking areas, and overlooks. Impacts on wildlife populations, including recovery of the eastern timber wolf, would be relatively minor. There would be no impacts on cultural resources because there are no extant buildings, and an archeological survey found no significant sites. The anticipated increase in visitation would cause some components of the existing visitor experiences to be lost, but a new experience would be offered. Significant social impacts, particularly in the Grand Marais area, would be caused by increased traffic and decreased tranquility. There could be a significant increase in visitor expenditures in Munising and Grand Marais. An increase in seasonal NPS staff would be necessary to provide law enforcement and maintenance for the new section of road and its associated spur roads, parking areas, and overlooks.

Alternative C: Inland Buffer Zone Corridor

The road would be located generally parallel to the proposed alignment of alternative B about 800 feet south and east of the Beaver Basin Rim to a point east of the Sevenmile area where it would turn directly east across the Kingston Plains to intersect with Alger County H–58 north of Kingston Lake. It would be situated on largely non-NPS owned lands within the park inland buffer zone.

Construction activities associated with a road within the inland buffer zone of the park are similar to those of alternative B. The overlook locations would be the same as those for alternative B. and old road traces would be used wherever possible for the new road. Approximately 87 acres of forest vegetation (mixed northern hardwoods and pineland) would be effected with 38 acres permanently lost and 49 acres replanted to grasses and forbs. The length of this road would be 11.5 miles. The National Park Service would be required to acquire 2,560 acres of land (330 acres by donation from the State of Michigan).

Impacts for air quality, noise, soils, vegetation, wildlife, cultural resources, visitor use and experience, socioeconomic environment, and park operations would be similar to those of alternative B. As in the case of alternative B., the National Park Service would initiate further section 7(c) Endangered Species Act consultation with the U.S. Fish and Wildlife Service with respect to the eastern timber wolf and other threatened and endangered species prior to beginning any construction.

Alternative A: No Action (Continuation of Existing Conditions)

In alternative A (no-action alternative), the current management of Pictured Rocks National Lakeshore would continue. A new park road would not be built, and existing park roads would be maintained at current levels. Access into the park would not change. Visitors would continue to drive outside the park, primarily through the park's inland buffer zone on county road H–58 or on state highways 28 and 77, to get from one end of the park to the other. This alternative would not be consistent with the intent of Public Law 89–668, which directed NPS development of a scenic drive within the shoreline zone of the national lakeshore.

Overall impacts on air quality, noise, soils, vegetation, wildlife (including recovery of the eastern timber wolf), and visual resources/quality would be minor because no new road construction actions would be taken that affect these resources. There would be no impacts on cultural resources. If current visitation rates continue, there would be a significant increase in the number of visitors to the park by 2003, but the effect on the visitor experience should be negligible. If visitation increased, there would be a significant increase in visitor expenditures as well as a significant change in the lifestyle for residents of Grand Marais. In order to provide the appropriate level of services, the park would need to increase its seasonal staff.

Other Alternatives

(1) Upgrading County Road H–58

Analyzed and rejected as alternative 3 of the environmental assessment for the 1981 *General Management Plan, Pictured Rocks National Lakeshore,* the upgrade and paving of existing county road H–58 from Legion Lake to the Twelvemile Beach Campground was proposed by participants in the EIS preparation process. A spur road would be built to a proposed new overlook at Beaver Basin. Except for a small section of road near the Twelvemile Beach Campground and the overlook spur road, the proposed park road would be located either completely outside the park boundary or in the inland buffer zone. Under this alternative, H–58 would continue to be a county road and would be maintained by the county. The road would continue to be open to commercial traffic and groomed for snowmobile use.

This alternative was rejected from analysis for several reasons. First, H–58 existed prior to the park's enabling legislation (80 Stat. 922), and as such it could not qualify as the scenic shoreline drive authorized by the act. The legislative history of the enabling legislation specifically states that the shoreline drive is to be built within the park's shoreline zone. Designating this portion of H–58 as the shoreline drive would not be consistent with congressional intent. For these reasons, the Department of the Interior's regional solicitor concluded that H–58 could not qualify as the scenic shoreline drive authorized by Congress.

In addition to the above legislative requirements, most of H–58 between Legion Lake and Twelvemile Beach Campground is too far from the actual Lake Superior shoreline to reasonably be considered a shoreline drive. Also, H–58 is not owned or maintained by the National Park Service and portions are not within the park boundary. The park Service has no authority or funding source to upgrade a county (or state) owned roadway. The Park Service could not manage use of the road or the adjacent land. Using H–58 as the shoreline drive does not separate park visitor traffic from local or commercial traffic. Thus, a park experience is not provided to visitors by upgrading H–58. Finally, visitors still would have to drive outside the park and would not have access to the center of the park.

(2) Construct a Paved Trail

Several individuals and groups proposed that the National Park Service construct a paved trail for nonmotorized use instead of a new road. This new trail could be used by hikers, bikers, horses, and visitors in wheelchairs. Presumably, it would follow the same alignment as the proposed road. This alternative was rejected because it would be inconsistent with both the park's enabling legislation (which called for development of a shoreline drive) and the 1981 *General Management Plan* (which called for construction of a road along the rim of Beaver Basin). In addition, this trail would serve only a small segment of the public. Many more park visitors probably would drive a road than would walk or bike on a 13-mile-long trail through the woods.

(3) Construct a Gravel Road

An alternative was advanced to construct a new road with a gravel surface instead of pavement. This alternative would be inconsistent with the park's general management plan, which called for the main east-west road through the park (including the new road) to be paved. Constructing a gravel surface road would not eliminate environmental impacts. Although a gravel road would be partially permeable to precipitation and would be less expensive to construct, it would result in many of the same impacts as a paved road (e.g., increased noise, loss of vegetation, wildlife disturbance). In addition, a gravel road would result in increased dust and increased potential for erosion and vehicle damage, and would require more routine maintenance than a paved road.

Measures To Minimize Harm

This record of decision incorporates mitigation measures identified in the Final Environmental Impact Statement (*Mitigating Measures* pages 29–33) and in the section 7(c) Endangered Species Act consultation comments of the U.S. Fish and Wildlife Service.

Several design features of the road and management actions will help minimize natural resource impacts of the road. These include siting the road away from the escarpment, designing it as a two-lane roadway with a posted speed of 35 mph, prohibiting commercial vehicles (except tour buses), not plowing the road in winter, eliminating by reclaiming all ''two tracks'' and trails providing vehicle and pedestrian access into the Beaver Basin from the escarpment, and prohibiting parking along the road except at the two overlooks provided.

Specific actions to be taken to minimize harm are described in the Final Environmental Impact Statement under the following subject classifications: Road Design and Construction (pages 29–30), Air Quality and Noise (pages 30–31), Water Quality (page 31), Soils (pages 31–32), Vegetation (page 32), Wolves (page 32), Public Use of the Road (pages 32–33), and Federal Highway Administration Preconstruction Contract Requirements (page 33). Among the specific actions to be taken to minimize the road impacts would be the revegetation of disturbed areas with native plantings. The basis for this revegetation program would be preparation of a native plants revegetation plan and the subsequent propagation of plant materials to be used in the reclamation.

Comments on the Final EIS

The National Park Service received a total of 699 written responses regarding the draft Environmental Impact Statement. Additional responses were received regarding the Final Environmental Impact Statement. Two were responses from other federal agencies and six responses were from state, county, and local agencies. Twenty responses were from private groups or organizations. All comments received were reviewed in preparing this record of decision, and it was concluded that all issues relevant to the adequacy of the *Final Environmental Impact Statement: Beaver Basin Rim Road* have been addressed.

Conclusion

Following evaluation of the public review comments concerning the alternatives and environmental impacts presented in the draft environmental impact statement, and considering the legislative mandate to develop a scenic shoreline drive, the National Park Service believes that the selected alternative is the legally consistent course of action for development and management of Pictured Rocks National Lakeshore. However, in response to considerable public opposition to this proposed road, and the efforts of members of Congress to eliminate the legislative requirement for this development, the National Park Service will take no immediate action to implement the project.

Dated: July 31, 1996.

William W. Schenll,

Field Director, Midwest Field Area.

[FR Doc. 96–22698 Filed 9–5–96; 8:45 am]

BILLING CODE 4310–70–P

Cape Cod National Seashore, South Wellfleet, MA; Cape Cod National Seashore Advisory Commission Meeting

Notice is hereby given in accordance with the Federal Advisory Committee

Act (Pub. L. 92–463, 86 Stat. 770, 5 U.S.C. App 1, section 10), that a meeting of the Cape Cod National Seashore Advisory Commission will be held on Friday, September 27, 1996.

The Commission was reestablished pursuant to Public Law 99–349, Amendment 24. The purpose of the Commission is to consult with the Secretary of the Interior, or his designee, with respect to matters relating to the development of the Cape Cod National Seashore, and with respect to carrying out the provisions of sections 4 and 5 of the Act establishing the Seashore.

The commission members will convene at Park Headquarters, Marconi Station, at 1:00 p.m., September 27, 1996 for the regular business meeting which will be held for the following reasons:

1. Adoption of Agenda
2 Approval of Minutes of Previous Meeting
3. Reports of Officers
4. Use & Occupancy Status Report
5. Superintendent's Report
   Lighthouses
   Draft General Management Plan
   Water Management Task Force Update
   Airport Improvements—Hatches Harbor
   News from Washington
6. Old Business
   Dune Shack Committee Report
7. New Business
   Plan for GMP Public Comment in October
8. Agenda for next meeting
9. Date for next meeting
10. Public comment
11. Adjournment

The meeting is open to the public. It is expected that 15 persons will be able to attend the meeting in addition to the Commission members.

Interested persons may make oral/written presentations to the Commission during the business meeting or file written statements. Such requests should be made to the park superintendent at least seven days prior to the meeting. Further information concerning the meeting may be obtained from the Superintendent, Cape Cod National Seashore, 99 Marconi Site Road, Wellfleet, MA 02667.

Dated: August 28, 1996.

Linda Canzanelli,

Acting Superintendent.

[FR Doc. 96–22699 Filed 9–05–96; 8:45 am]

BILLING CODE 4310–70–P

Notice of Intent To Repatriate a Cultural Item in the Possession of the Buffalo Bill Historical Center, Cody, WY

AGENCY: National Park Service, Interior.

ACTION: Notice.

Notice is hereby given under the Native American Graves Protection and Repatriation Act, 25 U.S.C. 3005(a)(2), of the intent to repatriate a cultural item in the possession of the Buffalo Bill Historical Center, Cody, WY which meets the definition of ''sacred object'' under Section 2 of the Act.

The Medicine Pipe Thunder Bundle consists of a calumet (eagle-feathered pipe stem) with red cloth cover; a secondary pipe consisting of a pipe bowl and wooden stem; two buffalo skin rattles; four stuffed intact bird skins with cloth wrappers consisting of a Canadian goose, hawk, duck and kingfisher; a Hudson's Bay cloth, and a wool blanket.

Authorities of the United States Fish and Wildlife Service have been contacted regarding applicability of Federal endangered species statutes to this transfer and have concurred in the conclusion that the object is not covered due to its age.

Museum records indicate that the bundle was purchased by the Buffalo Bill Historical Center in 1968 from Jim Brubaker, a dealer in the Browning Montana area. Ethnohistorical documentation gathered from Lone Wolf (nephew of Boy Chief) together with evidence submitted by the representatives of the Blackfeet Nation indicates that the known history of the bundle can be traced to the 1870's when Eagle Plume was the traditional bundle holder. The bundle passed through several bundle holders including Lone Chief in the 1880's, Wolf Plume (ca. 1896–1910), Chief Crow (ca. 1910–1915), Boy Chief (ca. 1915–1921), Raven Chief (ca. 1921–1930), and Bull Plume (ca. 1930–1960's). Descendants of Boy Chief sold the bundle to Jim Brubaker.

During consultation with the Buffalo Bill Historical Center, authorized representatives of the Blackfeet Nation and the Pikuni Traditionalists Association identified this object as necessary for the practice of traditional Blackfeet religion. These representatives, including traditional religions leaders, have verified that this object is a Medicine Pipe Thunder Bundle of the Blackfeet Nation, known as Boy Chief's bundle.

Based on the above-mentioned information, officials of the Buffalo Bill Historical Center have determined that, pursuant to 25 U.S.C. 3001(3)(C), this cultural item is a specific ceremonial object needed by traditional Native American religious leaders for the practice of traditional Native American religions by their present-day adherents. Officials of the Buffalo Bill Historical Center have also determined that, pursuant to 25 U.S.C. 3001(2), there is a relationship of shared group identity which can be reasonably traced between this item and the Blackfeet Nation.

This notice has been sent to officials of the Blackfeet Nation. Representatives of any other Indian tribe that believes itself to be culturally affiliated with this object should contact Emma I. Hansen, Buffalo Bill Historical Center, P.O. Box 1000, Cody, WY 82414, telephone (307) 587–4771 before October 7, 1996. Repatriation of these objects to the Blackfeet Nation may begin after that date if no additional claimants come forward.

Dated: August 29, 1996.

Francis P. McManamon,

Departmental Consulting Archeologist, Chief, Archeology and Ethnography Program.

[FR Doc. 96–22825 Filed 9–5–96; 8:45 am]

BILLING CODE 4310–70–M

OVERSEAS PRIVATE INVESTMENT CORPORATION

Sunshine Act Meeting; September 17, 1996 Board of Directors Meeting

TIME AND DATE: Tuesday, September 17, 1996, 1:00 PM (OPEN Portion) 1:30 PM (CLOSED Portion).

PLACE: Offices of the Corporation, Twelfth Floor Board Room, 1100 New York Avenue, N.W., Washington, D.C.

STATUS: Meeting OPEN to the Public from 1:00 PM to 1:30 PM Closed portion will commence at 1:30 PM (approx.)

MATTERS TO BE CONSIDERED:

1. President's Report.
2. New Appointment.
3. Approval of June 11, 1996 Minutes (Open Portion).
4. Meeting schedule through June 1997.

FURTHER MATTERS TO BE CONSIDERED: (Closed to the Public 1:30 PM).

1. Insurance Project in Brazil.
2. Finance Project in Brazil.
3. Insurance Project in Peru.
4. Finance Project in Argentina.
5. Insurance Project in Argentina.
6. Finance Project in Russia.
7. Finance Project in Nepal.
8. Finance Project in Morocco.
9. Insurance Project in Oman.
10. Insurance Project in India.
11. Insurance Project in Guatemala
12. Insurance Project in El Salvador.
13. Investment Fund—Global.
14. Investment Fund in Latin America.
15. Investment Fund in India.
16. Proposed FY 1998 Budget and Allocation of Retained Earnings.
17. Pending Major Projects.
18. Approval of June 11, 1996 Minutes (Closed Portion).

CONTACT PERSON FOR INFORMATION: Information on the meeting may be

obtained from Connie M. Downs at (202) 336–8438.

Dated: September 4, 1996.

Connie M. Downs,

OPIC Corporate Secretary.

[FR Doc. 96–22960 Filed 9–4–96; 8:45 am]

BILLING CODE 3210–01–M

DEPARTMENT OF LABOR

Office of the Secretary

Submission for OMB Review; Comment Request

August 30, 1996.

The Department of Labor (DOL) has submitted the following public information collection requests (ICRs) to the Office of Management and Budget (OMB) for review and approval in accordance with the Paperwork Reduction Act of 1995 (P.L. 104–13, 44 U.S.C. Chapter 35). Copies of these individual ICRs, with applicable supporting documentation, may be obtained by calling the Department of Labor Acting Departmental Clearance Officer, Theresa M. O'Malley ({202} 219–5095). Individuals who use a telecommunications device for the deaf (TTY/TDD) may call {202} 219–4720 between 1:00 p.m. and 4:00 p.m. Eastern time, Monday through Friday.

Comments should be sent to Office of Information and Regulatory Affairs, Attn: OMB Desk Officer for (BLS/DM/ESA/ETA/OAW/MSHA/OSHA/PWBA/VETS), Office of Management and Budget, Room 10235, Washington, DC 20503 ({202} 395–7316), within 30 days from the date of this publication in the Federal Register.

The OMB is particularly interested in comments which:

* Evaluate whether the proposed collection of information is necessary for the proper performance of the functions of the agency, including whether the information will have practical utility;

* Evaluate the accuracy of the agency's estimate of the burden of the proposed collection of information, including the validity of the methodology and assumptions used;

* Enhance the quality, utility, and clarity of the information to be collected; and

* Minimize the burden of the collection of information on those who are to respond, including through the use of appropriate automated, electronic, mechanical, or other technological collection techniques or other forms of information technology, e.g., permitting electronic submission of responses.

Agency: Employment Standards Administration.

Title: Carrier's or Self-Insurer's Report to the Deputy Commissioner.

OMB Number: 1215–0051.

Agency Number: LS 222.

Frequency: On occasion.

Affected Public: Business or other for-profit.

Number of Respondents: 16.

Estimated Time Per Respondent: 15 minutes.

Total Burden Hours: 41.

Total Annualized capital/startup costs: $0.

Total annual (operating/maintenance) costs: $0.

Description: The Carrier's or Self-Insurer's Report to the Deputy Commissioner (LS–222) is used for the early identification of injured workers who may need vocational rehabilitation services to assist them in a swift return to employment. Information obtained from this report will assure that disabled workers will be assisted in obtaining the best rehabilitation services available.

Agency: Employment Standards Administration.

Title: OFCCP Recordkeeping/Reporting: Construction.

OMB Number: 1215–0163.

Affected Public: Business or other for-profit; Not-for Profit.

Respondents	Average hours per response	Frequency	Total responses	Subtotal hours
Recordkeeping:				
100,000	48	Recdkpg	100,000	4,800,000
(2,061 of above, Affirmative Action Plan)	15.107	Recdkpg	2,061	31,136
Reporting:				
(1,283 of above, Compliance Reviews)	3	Annually	1,283	3,849
5 (Hometown Plans)	.42	Quarterly	20	8

Total Burden Hours: 4,834,993.

Total annualized capital/startup costs: $0.

Total annual (operating/maintenance) costs: $7.00.

Description: The Department of Labor seeks to revise this information collection to eliminate the routine submission of the Form CC–257. Form CC–257 (Employment Utilization Report) provided a monthly summary of total work hours by race and gender on construction employees, classified by trade. This revision will result in a net reduction of 419,316 burden hours.

Agency: Employment Standards Administration.

Title: Application of the Employee Polygraph Protection Act of 1988.

OMB Number: 1215–0170.

Frequency: On occasion.

Affected Public: Business or other for-profit; Individuals or households; Not for profit institutions.

Number of Respondents: 328,000.

Estimated Time Per Respondent: 30 minutes.

Estimated Time per Response for Recordkeeping per Record: 1 to 5 minutes.

Total Burden Hours: 82,406.

Total annualized capital/startup costs: $0.

Total annual (operating/maintenance) costs: $0.

Description: This information is being collected to ensure that individuals subject to polygraph testing are afforded the rights and protections contained in the Employee Polygraph Protection Act (EPPA). Hours for third party notification not previously in the information collection are now included. Failure to collect this information would make it extremely difficult for the Wage and Hour Division to enforce the provision of the EPPA.

Agency: Employment Standards Administration.

Title: Representative Payee Report; Representative Payee-Short Form; Physician's/Medical Officer's Report.

OMB Number: 1215–0173.

Agency Number: CM 623, CM 623S; CM 787.

Frequency: On occasion.

Affected Public: Individuals or households; Business or other for-profit; Not for-profit institutions.

Form	Total respondents	Responses	Total response time	Burden hours
CM 623	1,335	1,335	1½ hrs.	2,003
CM 623S	890	890	10 mins.	148
CM 787	223	223	15 mins.	56
Totals	2,448	2,448		2,207

Total Burden Hours: 2,207.

Total annualized (capital/startup) costs: 0.

Total annual (operating/maintenance) costs: $779.

Description: The Representative Payee Report (CM–623) and the Representative Payee Report-Short Form (CM–623S) are used to ensure the benefits paid to a representative payee are being used for the beneficiary's well being. The Physician's/Medical Officer's Report (CM–787) is used to determine the beneficiary's capability to manage monthly Black Lung benefits. Without the requested information, it would not be possible to determine if a beneficiary is capable and/or competent to manage his/her benefits, and to assure that the representative payee is using the benefits to meet the beneficiary's needs.

Cheryl Ann Robinson,

Acting Departmental Clearance Officer.

[FR Doc. 96–22801 Filed 9–5–96; 8:45 am]

BILLING CODE 4510–27–M

Employment and Training Administration

[TA–W–32,355]

AVX Corporation, Myrtle Beach, SC; Amendment Certification Regarding Eligibility To Apply for Worker Adjustment Assistance

In according with Section 223 of the Trade Act of 1974 (19 U.S.C. 2273) the Department of Labor issued a Certification of Eligibility to Apply for Worker Adjustment Assistance on June 13, 1996, applicable to all workers of AVX Corporation located in Myrtle Beach, South Carolina. The notice was published in the Federal Register on July 3, 1996 (61 FR 34875).

At the request of the State agency, the Department reviewed the certification for workers of the subject firm. The affected workers were involved in the testing and packaging operations in the production of ceramic capacitors. New information provided by the company shows that workers are separately identifiable by product line. Accordingly, the Department is amending the certification to limit coverage to those workers of the subject firm in Myrtle Beach involved in testing and packaging operations related to production of ceramic capacitors.

The intent of the Department's certification is to include those workers of AVX Corporation who were adversely affected by imports.

The amended notice applicable to TA–W–32,355 is hereby issued as follows:

''All workers of AVX Corporation, Myrtle Beach, South Carolina involved in testing and packaging operations related to the production of ceramic capacitors, who became totally or partially separated from employment on or after May 7, 1995, are eligible to apply for adjustment assistance under Section 223 of the Trade Act of 1974.''

Signed at Washington, D.C. this 26th day of August 1996.

Russell T. Kile,

Acting Program Manager, Policy and Reemployment Services, Office of Trade Adjustment Assistance.

[FR Doc. 96–22794 Filed 9-5–96; 8:45 am]

BILLING CODE 4510–30–M

[TA–W–32,234 & 234C]

The Carborundum Company, et al.; Amended Certification Regarding Eligibility To Apply for Worker Adjustment Assistance

In accordance with Section 223 of the Trade Act of 1974 (19 U.S.C 2273) the Department of Labor issued a Certification of Eligibility to Apply for Worker Adjustment Assistance on May 30, 1996, applicable to all workers of The Carborundum Company, W.H. Wendel Technology Center, Niagara Falls, New York, and The Structure Ceramics Division, Niagara Falls, New York. The notice was published in the Federal Register on August 6, 1996 (61 FR 40854).

At the request of the company, the Department reviewed the certification for workers of the subject firm. New information provided by the company shows that worker separations have occurred at the subject firms' Carborundum Speciality Products, Incorporated, Gardner, Massachusetts location. The workers are engaged in the production of ceramic based products.

The intent of the Department's certification is to include all workers of the subject firm who were adversely affected by increased imports of ceramic based products. Accordingly, the Department is amending the certification to cover the workers of Carborundum Speciality Products, Incorporated, Gardner, Massachusetts.

The amended notice applicable to TA–W–32,234 is hereby issued as follows:

''All workers of The Carborundum Company, W.H. Wendel Technology Center, Niagara Falls, New York (TA–W–32,234) and Carborundum Speciality Products, Incorporated, Gardner, Massachusetts (TA–W–32,234C) who became totally or partially separated from employment on or after March 29, 1995 are eligible to apply for adjustment assistance under Section 223 of the Trade Act of 1974.''

Signed at Washington, D.C. this 20th day of August 1996.

Russell T. Kile,

Acting Program Manager, Policy and Reemployment Services, Office of Trade Adjustment Assistance.

[FR Doc. 96–22795 Filed 9–5–96; 8:45 am]

BILLING CODE 4510–30–M

[TA–W–31,635]

Distribution and Auto Service, Inc. Seattle, WA; Notice of Negative Determination on Reconsideration on Remand

The United States Court of International Trade (USCIT) granted the Secretary of Labor's motion for a voluntary remand for further investigation in *Teamsters, Local Union No. 117, International Brotherhood of Teamsters, AFL–CIO–CLC* v. *U.S. Department of Labor* (96–04–01047).

The Department's initial denial for the workers of Distribution and Auto Service, Inc. (herein after referred to as DAS), Seattle Washington, issued on December 5, 1995 and published in the Federal Register on January 26, 1996 (61 FR 2537), was based on the fact that the workers provided a service and did not produce an article.

The petitioners' request for reconsideration was dismissed on February 9, 1996 and published in the Federal Register on February 23, 1996 (61 FR 7021). The Department's dismissal was based on the fact that the application contained no new

substantial information which would bear importantly on the determination.

The workers at DAS are engaged in predelivery services for imported Nissan automobiles, including repair to damaged cars. Workers also install components including air conditioners, graphics decals and appliques, luggage racks, floor mats, arm rests, bed liners (for pickup trucks), running boards and steps, tire covers, cargo nets, fenders flares, air deflectors and security systems. None of these activities constitutes production of an article within the meaning of the Trade Act.

Local 117 claims that until these accessories are installed, the vehicles are ''incomplete'' and not ready for sale. Findings on remand show that the components installed on vehicles by workers by DAS are accessories which are optional according to buyer preference. All except air conditioners are exterior dress-up items. None of these items is essential to make a motor vehicle ready for retail sale, nor does any of them play any essential role in the operation of a motor vehicle. All of the accessories installed at the subject firm are frequently installed by the retail dealer's own service department if a customer wants them installed.

Other findings on remand show that the accessories are not manufactured at the subject facility but purchased from other domestic firms. (See AR pp. 33–41.)

Service workers may be certified eligible to apply for TAA only if the worker separation was caused by a reduced demand for their services from a parent or controlling firm or subdivision whose workers produce an article and who are currently under a certification for TAA. These conditions have not been met for Distribution and Auto Service, Inc.

Conclusion

After reconsideration on remand, I affirm the original notice of negative determination of eligibility to apply for adjustment assistance for workers and former workers of Distribution and Auto Service, Inc., Seattle, Washington.

Signed at Washington, D.C. this 22nd day of August 1996.

Russell T. Kile,

Acting Program Manager, Policy and Reemployment Services, Office of Trade Adjustment Assistance.

[FR Doc. 96–22800 Filed 9–5–96; 8:45 am]

BILLING CODE 4510–30–M

[TA–W–32,528]

Hickory Hills Industries, Inc., Clifton, TN; Notice of Termination of Investigation

Pursuant to Section 221 of the Trade Act of 1974, an investigation was initiated on July 8, 1996 in response to a worker petition which was filed June 18, 1996 on behalf of workers at Hickory Hills Industries, Inc. (TA–W–32,528).

The petitioning group of workers are covered under an existing Trade Adjustment Assistance certification (TA–W–32,487A). Consequently, further investigation in this case would service no purpose, and the investigation has been terminated.

Signed at Washington, D.C., this 23rd day of August 1996.

Russell T. Kile,

Acting Program Manager, Policy and Reemployment Services, Office of Trade Adjustment Assistance.

[FR Doc. 96–22790 Filed 9–5–96; 8:45 am]

BILLING CODE 4510–30–M

[TA–W–32,249]

J&W Garment Factory Scott's Hill, TN; Notice of Revised Determination on Reconsideration

On June 7, 1996, the Department issued a Negative Determination Regarding Eligibility to Apply for Worker Adjustment Assistance, applicable to all workers of J&W Garment Manufacturing located in Scott's Hill, Tennessee. The notice was published in the Federal Register on June 20, 1996 (61 FR 31552).

By letter postmarked July 11, 1996, the petitioner requested administrative reconsideration of the Department's findings. The petitioners presented new evidence that was not considered in the original determination.

Findings on reconsideration show that the correct company name is J&W Garment Factory. The subject firm is a contractor that sews and inspects pants, shorts and other bottoms. The workers were denied TAA because the ''contributed importantly'' test of the Group Eligibility Requirements of the Trade Act was not met. This test is generally determined through a survey of the workers' firm's major declining customers.

A secondary survey of J&W Garment customers was conducted. New investigation findings on reconsideration show that secondary customers increased their reliance on imports of jeans.

Conclusion

After careful consideration of the new facts obtained on reconsideration, it is concluded that the workers of J&W Garment Manufacturing, Scott's Hill, Tennessee were adversely affected by increased imports of articles like or directly competitive with pants, shorts and other bottoms produced at the subject firm.

''All workers of J&W Garment Manufacturing, Scott's Hill, Tennessee who became totally or partially separated from employment on or after April 3, 1995 are eligible to apply for adjustment assistance under Section 223 of the Trade Act of 1974.''

Signed at Washington, D.C., this 21st day of August 1996.

Russell T. Kile,

Acting Program Manager, Policy and Reemployment Services, Office of Trade Adjustment Assistance.

[FR Doc. 96–22797 Filed 9–5–96; 8:45 am]

BILLING CODE 4510–30–M

[TA–W–31, 971 & 971A]

J.E. Morgan Knitting, Inc., et al.; Amended Certification Regarding Eligibility To Apply for Worker Adjustment Assistance

In accordance with Section 223 of the Trade Act of 1974 (19 USC 2273) the Department of Labor issued a Certification of Eligibility to Apply for Worker Adjustment Assistance on March 26, 1996, applicable to all workers of J. E. Morgan Knitting, Inc., located in New Market, Virginia. The notice was published in the Federal Register on April 9, 1996 (61 FR 15832).

At the request of petitioners, the Department reviewed the certification for workers of the subject firm. The company confirms that worker separations have occurred at Tamaqua, Pennsylvania. The workers at Tamaqua provide management support services to the subject firm's New Market, Virginia thermal underwear production facility.

The intent of the Department's certification is to include all workers of the subject firm who were adversely affected by increased imports. Accordingly, the Department is amending the certification to cover the workers of J. E. Morgan Knitting, Inc., Tamaqua, Pennsylvania.

The amended notice applicable to TA–W–31, 971 is hereby issued as follows:

All workers of J. E. Morgan Knitting, Inc., New Market, Virginia (TA–W–31,971) and Tamaqua, Pennsylvania (TA–W–31,971A), who became totally or partially separated from employment on or after February 13, 1995 are eligible to apply for adjustment

assistance under Section 223 of the Trade Act of 1974.

Signed at Washington, D.C. this 26th day of August 1996.

Russell T. Kile,

Acting Program Manager, Policy and Reemployment Services, Office of Trade Adjustment Assistance.

[FR Doc. 96–22792 Filed 9–5–96; 8:45 am]

BILLING CODE 4510–30–M

[TA–W–32, 178, 178C & 178D]

Kentucky Apparel LLP; Amended Certification Regarding Eligibility To Apply for Worker Adjustment Assistance

In accordance with Section 223 of the Trade Act of 1974 (19 USC 2273) the Department of Labor issued a Certification of Eligibility to Apply for Worker Adjustment Assistance on April 29, 1996, applicable to all workers of Kentucky Apparel LLP, located in Burkesville, Kentucky. The notice was published in the Federal Register on May 17, 1996 (61 FR 24960).

At the request of petitioners, the Department reviewed the certification for workers of the subject firm. New information provided by the company shows that worker separations will occur at other Kentucky Apparel plants, two in Scottsville and one in Holland, Kentucky. Each of these plants is scheduled to begin closing in September 18, 1996. The workers produce denim jeans.

The intent of the Department's certification is to include all workers of the subject firm who were adversely affected by increased imports of jeans. Accordingly, the Department is amending the certification to cover the workers of Kentucky Apparel LLP in Scottsville and Holland, Kentucky.

The amended notice applicable to TA–W–32,178 is hereby issued as follows:

All workers of Kentucky Apparel LLP, Located in Burkesville (TA–W–32,178), Scottsville (TA–W–32,178C) and Holland (TA–W–32,178D) Kentucky, who became totally or partially separated from employment on or after March 11, 1995 are eligible to apply for adjustment assistance under Section 223 of the Trade Act of 1974.

Signed at Washington, D.C. this 26th day of August 1996.

Russell T. Kile,

Acting Program Manager, Policy and Reemployment Services, Office of Trade Adjustment Assistance.

[FR Doc. 96–22791 Filed 9–5–96; 8:45 am]

BILLING CODE 4510–30–M

[TA–W–31,878, 878A, 878B]

Klear-Knit of Statesville, Inc., Statesville, NC, et al; Amended Certification Regarding Eligibility To Apply for Worker Adjustment Assistance

In accordance with Section 223 of the Trade Act of 1974 (19 U.S.C. 2273) the Department of Labor issued a Certification of Eligibility to Apply for Worker Adjustment Assistance on March 18, 1996, applicable to all workers of Klear-Knit of Statesville, Inc. located in Statesville, North Carolina. The notice will soon be published in the Federal Register.

At the request of petitioners, the Department reviewed the certification for workers of the subject firm. The workers produce knit garments. Klear-Knit, Inc. reports that the Clover and Rock Hill, South Carolina plants will close by September 30, 1996, and November 1, 1996, respectively. All employees will be separated from employment. Based on these new findings, the Department is amending the certification to include all workers of Klear-Knit, Inc. located in Clover and Rock Hill, South Carolina.

The intent of the Department's certification is to include all workers of Klear-Knit, Inc. adversely affected by imports.

The amended notice applicable to TA–W–31,878 is hereby issued as follows:

''All workers of Klear-Knit of Statesville, Inc., Statesville, North Carolina (TA–W–31,878) and Klear-Knit, Inc., Clover, South Carolina (TA–W–31,878A) and Rock Hill, South Carolina (TA–W–31,878B), and Rock Hill, South Carolina (TA–W–31,878), who became totally or partially separated from employment on or after January 19, 1995, are eligible to apply for adjustment assistance under Section 223 of the Trade Act of 1974.''

Signed at Washington, D.C. this 20th day of August 1996.

Russell T. Kile,

Acting Program Manager, Policy and Reemployment Services, Office of Trade Adjustment Assistance.

[FR Doc. 96–22798 Filed 9–5–96; 8:45 am]

BILLING CODE 4510–30–M

[TW–A–32,586]

Klear-Knit, Inc., Clover SC; Notice of Termination of Investigation

Pursuant to Section 221 of the Trade Act of 1974, an investigation was initiated on July 29, 1996 in response to a worker petition which was filed July 17, 1996 on behalf of workers at Klear-Knit, Inc., Clover, South Carolina (TA–W–32,586).

The petitioning group of workers are covered under an existing Trade Adjustment Assistance certification (TA–W–31,878A). Consequently, further investigation in this case would serve no purpose, and the investigation has been terminated.

Signed at Washington, D.C., this 20th day of August 1996.

Russel T. Kile,

Acting Program Manager, Policy and Reemployment Services, Office of Trade Adjustment Assistance.

[FR Doc. 96–22799 Filed 9–5–96; 8:45 am]

BILLING CODE 4510–30–M

[TA–W–31,875 & 875A]

Rivera MFG., et al.; Amended Certification Regarding Eligibility To Apply for Worker Adjustment Assistance

In accordance with Section 223 of the Trade Act of 1974 (19 USC 2273) the Department of Labor issued a Certification of Eligibility to Apply for Worker Adjustment Assistance on March 20, 1996, applicable to all workers of Rivera Mfg., Pontotoc, Mississippi. The notice was published in the Federal Register on April 3, 1996 (61 FR 14820).

At the request of petitioners, the Department reviewed the certification for workers of the subject firm. The company confirms that worker separations have occurred Marah Shirt Co., Inc., New York, New York. Marah Shirt Co., Inc. shares common ownership with Rivera Mfg. The workers at Marah Shirt Co., Inc. in New York provide support services to Rivera Mfg.'s men's and boy's shirt production facility in Pontotoc, Mississippi.

The intent of the Department's certification is to include all workers of the subject firm who were adversely affected by increased imports. Accordingly, the Department is amending the certification to cover the workers of Marah Shirt Co., Inc., New York, New York.

The amended notice applicable to TA–W–31,875 is hereby issued as follows:

All workers of Rivera Mfg., Pontotoc, Mississippi (TA–W–31,875) and Marah Shirt Co., Inc., New York, New York (TA–W–31,875A), who became totally or partially separated from employment on or after April 27, 1995 are eligible to apply for adjustment assistance under Section 223 of the Trade Act of 1974.

Signed at Washington, D.C. this 26th day of August 1996.

Russell T. Kile,

Acting Program Manager, Policy and Reemployment Services, Office of Trade Adjustment Assistance.

[FR Doc. 96–22793 Filed 9–5–96; 8:45 am]

BILLING CODE 4510–30–M

[TA–W–32,487; TA–W–32,487A]

Savannah Manufacturing Corporation and Hickory Hills Industries, Inc., Tennessee; Amended Certification Regarding Eligibility To Apply for Worker Adjustment Assistance

In accordance with Section 223 of the Trade Act of 1974 (19 U.S.C. 2273) the Department of Labor issued a Certification of Eligibility To Apply for Worker Adjustment Assistance on July 3, 1996, applicable to all workers of Savannah Manufacturing Corporation located in Savannah, Tennessee. The notice was published in the Federal Register on August 2, 1996 (61 FR 40454).

At the request of the company, the Department reviewed the certification for workers of the subject firm. New information provided by the company shows that worker separations have occurred at Hickory Hills Industries, Inc., Clifton, Tennessee, which is the headquarters of Savannah Manufacturing. The workers at Hickory Hills Industries provided administrative services supporting the production of children's sportswear at Savannah Manufacturing. Based on these new findings, the Department is amending the certification to cover workers of Hickory Hills Industries, Inc. in Clifton, Tennessee.

The intent of the Department's certification is to include all workers of Savannah Manufacturing who were adversely affected by increased imports.

The amended notice applicable to TA–W–32,487 is hereby issued as follows:

''All workers of Savannah Manufacturing Corporation, Savannah, Tennessee (TA–W–32,487) and Hickory Hills Industries, Inc., Clifton, Tennessee (TA–W–32,487A) who became totally or partially separated from employment on or after June 7, 1995 are eligible to apply for adjustment assistance under Section 223 of the Trade Act of 1974.''

Signed at Washington, D.C. this 23rd day of August 1996.

Russell T. Kile,

Acting Program Manager, Policy and Reemployment Services, Office of Trade Adjustment Assistance.

[FR Doc. 96–22789 Filed 9–5–96; 8:45 am]

BILLING CODE 4510–30–M

Office of Trade Adjustment Assistance; Proposed Information Collection Request Submitted for Public Comment and Recommendations; ETA 9018

ACTION: Notice.

SUMMARY: The Department of Labor, as part of its continuing effort to reduce paperwork and respondent burden conducts a preclearance consultation program to provide the general public and Federal agencies with an opportunity to comment on proposed and/or continuing collections of information in accordance with the Paperwork Reduction Act of 1995 (PRA95) [44 U.S.C. 3506(c)(2)(A)]. This program helps to ensure that requested data can be provided in the desired format, reporting burden (time and financial resources) is minimized, collection instruments are clearly understood, and the impact of collection requirements on respondents can be properly assessed. Currently, the Office of Trade Adjustment Assistance is soliciting comments concerning the proposed revised collection of the Business Confidential Data Request. A copy of the ICR is attached to this notice.

DATES: Written comments must be submitted to the office listed in the addressee section below on or before November 5, 1996. The Department of Labor is particularly interested in comments which:

* evaluate whether the proposed collection of information is necessary for the proper performance of the functions of the agency, including whether the information will have practical utility;

* evaluate the accuracy of the agency's estimate of the burden of the proposed collection of information, including the validity of the methodology and assumptions used;

* enhance the quality, utility, and clarity of the information to be collected; and

* minimize the burden of the collection of information on those who are to respond, including through the use of appropriate automated, electronic, mechanical, or other technological collection techniques or other forms of information technology, e.g., permitting electronic submissions of responses.

ADDRESSES: Russell T. Kile, Office of Trade Adjustment Assistance, Employment and Training Administration, U.S. Department of Labor, Room C–4318, 200 Constitution Avenue, N.W., Washington, D.C., 20210. (202) 219–5555 (This is not a toll free number), FAX (202) 219–5753.

SUPPLEMENTARY INFORMATION:

I. Background

The Office of Trade Adjustment Assistance is required under the Trade Act of 1974 to conduct investigations to determine whether increased imports have contributed importantly to actual or threatened decreases in employment at firms whose workers have petitioned for trade adjustment assistance benefits. The ''Oil and Gas Drilling and Exploration Oilfield Services'' Business Confidential Data Request is designed to provide information on which determinations are based.

II. Current Actions

The Office of Trade Adjustment Assistance has made no substantial revisions to its existing data collection requirements. Various changes in data gathering processes have occurred including increased use of computerized data bases and the use of simplified forms transmitted by fax.

Type of Review: Revision.

Agency: Employment and Training Administration.

Title: Oil and Gas Drilling and Exploration Oilfield Services.

OMB Number: 1205–0272.

Agency Number: ETA 9018.

Recordkeeping: None.

Affected Public: Businesses.

Total Respondents: 75 per year.

Frequency: On occasion (as needed).

Average Time per Response: 3 hours.

Estimated Total Burden Hours: 225 hours.

Total Burden Cost (capital/startup): None.

Total Burden Cost (operating/maintaining): $4,021.

Comments submitted in response to this request will be summarized and/or included in the request for Office of Management and Budget approval of the information collection request; they will also become a matter of public record.

Dated: August 29, 1996.

Russel T. Kile,

Acting Program Manager, Policy and Reemployment Services, Office of Trade Adjustment Assistance.

Business Confidential

Department of Labor, Office of Trade Adjustment Assistance, Oil and Gas Industry

Exploration, Drilling, Oilfield Services

TA–W– _____

Subject Firm _____

Location _____

1. Organization

Describe the corporate structure of your firm, including the parent company, if any, and affiliates: _____

2. Operations

a. What percentage of your operations are directed primarily toward: Oil? ____ Gas? ____ Other? ____

b. Check the activities performed by your firm's workers:

____ Wireline logging
____ Laying pipe
____ Inspecting pipe
____ Tool fishing
____ Cementing
____ Acidizing
____ Penetrating
____ Seismic data analysis
____ Installing mud
____ Mixing mud
____ Installing chemicals
____ Fracturing
____ Testing
____ Workovers

c. If not listed in (b), describe other work performed by your firm's workers, such as pre-drilling or post-drilling activities:

_____
_____
_____

3. Revenues and Employment

Report revenues for the two full year periods identified below, and the most recent year-to-date period compared with the same period in the previous year.

Period	Revenues		Employment
	Crude oil	Natural gas	
1994	_____	_____	_____
1995	_____	_____	_____
January through June:			
1995	.....	.....	.....
1996	.....	.....	.....

Data reported above are for this operation ____ or corporate ____

Business Confidential

4. Customers

a. Please list your major customers:

Customer and address:

_____
_____
_____

Contact: _____
Phone: _____
FAX No.: _____

_____
_____
_____

Contact: _____
Phone: _____
FAX No.: _____

_____
_____
_____

Contact: _____
Phone: _____
FAX No.: _____

_____
_____
_____

Contact: _____
Phone: _____
FAX No.: _____

_____
_____
_____

Contact: _____
Phone: _____
FAX No.: _____

_____
_____
_____

Contact: _____
Phone: _____
FAX No.: _____

b. Is there any corporate affiliation between your firm and any of your customers?

Yes ____ No ____ If yes, please explain:

_____
_____
_____
_____

_____
Name of Company Official & Title

_____
Signature

_____
Telephone # FAX#

_____
Date

[FR Doc. 96–22802 Filed 9–5–96; 8:45 am]

BILLING CODE 4510–30–M

Office of Trade Adjustment Assistance; Proposed Information Collection Request Submitted for Public Comment and Recommendations; ETA 8562

ACTION: Notice.

SUMMARY: The Department of Labor, as part of its continuing effort to reduce paperwork and respondent burden conducts a preclearance consultation program to provide the general public and Federal agencies with an opportunity to comment on proposed and/or continuing collections of information in accordance with the Paperwork Reduction Act of 1995 (PRA95) [44 U.S.C. 3506(c)(2)(A)]. This program helps to ensure that requested data can be provided in the desired format, reporting burden (time and financial resources) is minimized, collection instruments are clearly understood, and the impact of collection requirements on respondents can be properly assessed. Currently, the Office of Trade Adjustment Assistance is soliciting comments concerning the proposed revised collection of the Customer Survey form. A copy of the ICR is attached to this notice.

DATES: Written comments must be submitted to the office listed in the addressee section below on or before November 5, 1996. The Department of Labor is particularly interested in comments which:

* Evaluate whether the proposed collection of information is necessary for the proper performance of the functions of the agency, including whether the information will have practical utility;
* Evaluate the accuracy of the agency's estimate of the burden of the proposed collection of information, including the validity of the methodology and assumptions used;
* Enhance the quality, utility, and clarity of the information to be collected; and
* Minimize the burden of the collection of information on those who are to respond, including through the use of appropriate automated, electronic, mechanical, or other technological collection techniques or other forms of information technology, e.g., permitting electronic submissions of responses.

ADDRESSEE: Russell T. Kile, Office of Trade Adjustment Assistance, Employment and Training Administration, U.S. Department of Labor, Room C–4318, 200 Constitution Avenue, N.W., Washington, D.C., 20210, (202) 219–5555 (This is not a toll free number), FAX (202) 219–5753.

SUPPLEMENTARY INFORMATION:

I. Background

The Office of Trade Adjustment Assistance is required under the Trade Act of 1974 to conduct investigations to determine whether increased imports have contributed importantly to actual or threatened decreases in employment at firms whose workers have petitioned

for trade adjustment assistance benefits. The Customer Survey form is designed to provide information on which determinations are based.

II. Current Actions

The Office of Trade Adjustment Assistance has made no substantial revisions to its existing data collection requirements. Various changes in data gathering processes have occurred including increased use of computerized data bases and the use of simplified forms transmitted by fax.

Type of Review: Revision.

Agency: Employment and Training Administration.

Title: Customer Survey.

OMB Number: 1205–0190.

Agency Number: ETA 8562.

Recordkeeping: None.

Affected Public: Businesses.

Total Respondents: 2,220 per year.

Frequency: On occasion.

Average Time per Response: 1.78 hours.

Estimated Total Burden Hours: 3,951 hours.

Total Burden Cost (capital/startup): None.

Total Burden Cost (operating/maintaining): $38,415.

Comments submitted in response to this request will be summarized and/or included in the request for Office of Management and Budget approval of the information collection request; they will also become a matter of public record.

Dated: August 29, 1996.

Russell T. Kile,

Acting Program Manager, Policy and Reemployment Services, Office of Trade Adjustment Assistance.

BILLING CODE 4510–30–M

OMB 1205-0190
Expiration Date: / /

TA-W-
SUBJECT FIRM:
CONTACT PERSON AT THE DEPT. OF LABOR: ((202) 219-); FAX (202) 219-5753.

1. Specify, for the product(s) below your total purchases from the subject firm, other domestic and foreign sources.

PRODUCT(S):

	Subject Firm		Other Domestic Firms		Foreign Firms	
Period	Quantity	Value	Quantity	Value	Quantity	Value
1994	_____	_____	_____	_____	_____	_____
1995	_____	_____	_____	_____	_____	_____
Jan. - 1995	_____	_____	_____	_____	_____	_____
Jan. - 1996	_____	_____	_____	_____	_____	_____

2. To the best of your knowledge, were any of the products purchased from other domestic firms wholly manufactured in a foreign country? YES or NO. If yes, indicate percentage for 1994 ____%, 1995 ____%, 1996 ____%

The data above should be your best estimate or tabulated from actual records:

Estimated____ Actual____

How many hours were required to complete this form? _____

PRINT NAME SIGNATURE TITLE

COMPANY NAME PHONE NUMBER FAX NUMBER

Public reporting burden for this collection of information is estimated to average one hour per response, including the time for reviewing instructions, searching existing data sources, gathering and maintaining the data needed, and completing and reviewing the collection of information. Send comments regarding this burden estimate or any other aspect of this collection of information, including suggestions for reducing this burden to the Office of IRM Policy, U.S. Department of Labor, Room N-1301, 200 Constitution Avenue N.W., Washington, DC 20210; and to the Office of Management and Budget, Paperwork Reduction Project (1205-0190), Washington, D.C. 20503. DO NOT SEND THE COMPLETED FORM TO EITHER OF THESE OFFICES.

ETA Form 8562

[FR Doc. 96–22803 Filed 9–5–96; 8:45 am]
BILLING CODE 4510–30–C

Office of Trade Adjustment Assistance; Proposed Information Collection Request Submitted for Public Comment and Recommendations; ETA 9014

ACTION: Notice.

SUMMARY: The Department of Labor, as part of its continuing effort to reduce paperwork and respondent burden conducts a preclearance consultation program to provide the general public and Federal agencies with an opportunity to comment on proposed and/or continuing collections of information in accordance with the Paperwork Reduction Act of 1995 (PRA95) [44 U.S.C. 3506(c)(2)(A)]. This program helps to ensure that requested data can be provided in the desired format, reporting burden (time and financial resources) is minimized, collection instruments are clearly understood, and the impact of collection requirements on respondents can be properly assessed. Currently, the Office of Trade Adjustment Assistance is soliciting comments concerning the proposed revised collection of the Business Confidential Data Request. A copy of the ICR is attached to this notice.

DATES: Written comments must be submitted to the office listed in the addressee section below on or before November 5, 1996. The Department of Labor is particularly interested in comments which:

* evaluate whether the proposed collection of information is necessary for the proper performance of the functions of the agency, including whether the information will have practical utility;
* evaluate the accuracy of the agency's estimate of the burden of the proposed collection of information, including the validity of the methodology and assumptions used;
* enhance the quality, utility, and clarity of the information to be collected; and
* minimize the burden of the collection of information on those who are to respond, including through the use of appropriate automated, electronic, mechanical, or other technological collection techniques or other forms of information technology, e.g., permitting electronic submissions of responses.

ADDRESSEE: Russell T. Kile, Office of Trade Adjustment Assistance, Employment and Training Administration, U.S. Department of Labor, Room C–4318, 200 Constitution Avenue, N.W., Washington, D.C. 20210, (202) 219–5555 (This is not a toll free number), FAX (202) 219–5753.

SUPPLEMENTARY INFORMATION:

I. Background

The Office of Trade Adjustment Assistance is required under the Trade Act of 1974 to conduct investigations to determine whether increased imports have contributed importantly to actual or threatened decreases in employment at firms whose workers have petitioned for trade adjustment assistance benefits. The Business Confidential Data Request is designed to provide information on which determinations are based.

II. Current Actions

The Office of Trade Adjustment Assistance has made no substantial revisions to its existing data collection requirements. Various changes in data gathering processes have occurred including increased use of computerized data bases and the use of simplified forms transmitted by fax.

Type of Review: Revision.

Agency: Employment and Training Administration.

Title: Business Confidential Data Request.

OMB Number: 1205–0197.

Agency Number: ETA 9014.

Recordkeeping: None.

Affected Public: Businesses.

Total Respondents: 1,500 per year.

Frequency: On occasion.

Average Time per Response: 3 hours.

Estimated Total Burden Hours: 4,500 hours.

Total Burden Cost (capital/startup): None.

Total Burden Cost (operating/maintaining): $80,415.

Comments submitted in response to this request will be summarized and/or included in the request for Office of Management and Budget approval of the information collection request; they will also become a matter of public record.

Dated: August 29, 1996.

Russell T. Kile,

Acting Program Manager, Policy and Reemployment Services, Office of Trade Adjustment Assistance.

BILLING CODE 4510–30–M

BUSINESS CONFIDENTIAL DATA REQUEST **U.S. DEPARTMENT OF LABOR**

OFFICE OF TRADE ADJUSTMENT ASSISTANCE

OMB Approval No. 1205-0197
Expires:

TA-W-: _____
Subject firm: _____
Location: _____

1. Organization

Describe the organizational structure of the subject firm, including the parent company and affiliates if applicable. Include any subsidiaries, branches or affiliates that manufacture products similar to those made at the subject plant:

_____
_____
_____
_____

2. Sales, Production and Employment

Report the firm's sales, production, and employment for the last two full years, the most recent year to date, and the comparable period in the previous year.

List the product(s) manufactured at the subject firm:

_____

Period	Sales	Production	Employment
1994	_____	_____	_____
1995	_____	_____	_____

The sales reported above are subject firm [ ] corporate-wide [ ]

3. Company Imports (include 807.00)

A. If the subject firm or an affiliate imports products competitive with those made at the subject firm, report the import volume below:

Period	Product: _____	Product: _____
1994	_____	_____
1995	_____	_____

(If quantity is used, what is the unit of measurement? _____)

BUSINESS CONFIDENTIAL DATA REQUEST (Cont.)

B. Have the imports caused layoffs at the subject firm?
Yes [] No []

C. If the subject firm or parent does not import, and there are plans to start importing, when are the imports scheduled to arrive?

_____

4. Transfer Of Production

If layoffs were caused by a transfer to another facility, please indicate where.

_____

_____

5. Customers

Provide below a list of the subject firm's major declining customers. Include the address with zip code, name of the buyer or purchasing agent, telephone and FAX number.

A. Regular Customers

Product: _____

Customer and address

1. _____
_____
_____
Contact: _____
Phone: _____
FAX No. _____

2. _____
_____
_____
Contact: _____
Phone: _____
FAX No. _____

3. _____
_____
_____
Contact: _____
Phone: _____
FAX No. _____

4. _____
_____
_____
Contact: _____
Phone: _____
FAX No. _____

5. _____
_____
_____
Contact: _____
Phone: _____
FAX No. _____

6. _____
_____
_____
Contact: _____
Phone: _____
FAX No. _____

BUSINESS CONFIDENTIAL DATA REQUEST (Cont.)

B. Competitive bidding

If the subject firm markets its products by a competitive bidding process, complete the following.

Firm or agency awarding bid, address and contact	Description of project	
_____	_____	Project I.D.number_____
_____	_____	Amount of subject firm's bid_____
_____	_____	
_____	_____	
Contracting agent_____		Date of award_____
Phone number_____		Awardee (if known)
Fax No._____		_____
_____	_____	Project I.D.number_____
_____	_____	Amount of subject firm's bid_____
_____	_____	
_____	_____	
Contracting agent_____		Date of award_____
Phone number_____		Awardee (if known)
Fax No._____		_____
_____	_____	Project I.D.number_____
_____	_____	Amount of subject firm's bid_____
_____	_____	
_____	_____	
Contracting agent_____		Date of award_____
Phone number_____		Awardee (if known)
Fax No._____		_____

6. How many hours were required to complete this form?_____

_____ _____
Name of Company Official & Title Telephone #

_____ _____
Signature Date

Public reporting burden of this collection of information is estimated to vary from 1 to 10 hours per response, 10 hours for first time respondents, and 1 hour for firms involved in a previous investigation, including the time for reviewing instructions, searching existing data sources, gathering and maintaining the data needed, and completing and reviewing the collection of information. Send comments regarding this burden estimate or any other aspect of this collection of information, including suggestions for reducing this burden, to the Office of Trade Adjustment Assistance, U.S. Department of Labor, Room C-4517, Washington, D.C. 20213 and/or the Office of IRM Policy, Department of Labor, Room N-1301, 200 Constitution Avenue, N.W., Washington, D.C. 20210, Paperwork Reduction Project (1205-0197).

Do not send the completed forms to either of these offices.

ETA-9014
Apr 1995

[FR Doc. 96–22804 Filed 9–5–96; 8:45 am]
BILLING CODE 4510–30–C

[NAFTA–01049]

The Goodyear Tire and Rubber Company Air Springs Manufacturing Division, Green, Ohio; Notice of Revised Determination On Reopening

On July 19, 1996, the Department issued a Negative Determination Regarding Eligibility to Apply for NAFTA–Transitional Adjustment Assistance (NAFTA–TAA) applicable to all workers of The Goodyear Tire & Rubber Company, Air Springs Manufacturing Division located in Green, Ohio. The notice was published in the Federal Register on August 6, 1996 (FR 61 40853).

On its own motion, the Department reviewed the findings of the investigation. The workers produced air sleeves and air springs. The Department's original determination covered only those workers engaged in the production of air springs. New findings on reopening show that the Department failed to investigate workers who were engaged in the production of air sleeves. Findings show that the company transfer of production of air sleeves to a plant in Mexico started in 1994 and was completed in August 1995. Workers are separately identifiable by product line (air sleeves and air springs). New findings on reopening show that the workers engaged in the production of air sleeves were impacted by the transfer of production to Mexico.

Conclusion

After careful review of the additional facts obtained on reopening, I conclude that the shift in production of air sleeves to Mexico contributed to the total and partial separations of the workers engaged in the production of air sleeves by Goodyear Tire & Rubber Company, Green, Ohio. In accordance with the provisions of the Act, I make the following certification:

All workers of Goodyear Tire & Rubber Company, Green, Ohio engaged in the production of air sleeves who became totally or partially separated from employment on or after May 25, 1995 are eligible to apply for NAFTA–TAA under Section 250 of the Trade Act of 1974.

I further determine that all workers of Goodyear Tire & Rubber Company, Green, Ohio engaged in the production of air springs are denied eligibility to apply for NAFTA–TAA assistance under Section 250 of the Trade Act of 1974.

Signed at Washington, D.C. this 15th day of August 1996.

Rusell T. Kile,

Acting Program Manager, Policy and Reemployment Services, Office of Trade Adjustment Assistance.

[FR Doc. 96–22796 Filed 9–5–96; 8:45 am]

BILLING CODE 4510–30–M

Employment Standards Administration

Wage and Hour Division; Minimum Wages for Federal and Federally Assisted Construction; General Wage Determination Decisions

General wage determination decisions of the Secretary of Labor are issued in accordance with applicable law and are based on the information obtained by the Department of Labor from its study of local wage conditions and data made available from other sources. They specify the basic hourly wage rates and fringe benefits which are determined to be prevailing for the described classes of laborers and mechanics employed on construction projects of a similar character and in the localities specified therein.

The determinations in these decisions of prevailing rates and fringe benefits have been made in accordance with 29 CFR Part 1, by authority of the Secretary of Labor pursuant to the provisions of the Davis-Bacon Act of March 3, 1931, as amended (46 Stat. 1494, as amended, 40 U.S.C. 276a) and of other Federal statutes referred to in 29 CFR Part 1, Appendix, as well as such additional statutes as may from time to time be enacted containing provisions for the payment of wages determined to be prevailing by the Secretary of Labor in accordance with the Davis-Bacon Act. The prevailing rates and fringe benefits determined in these decisions shall, in accordance with the provisions of the foregoing statutes, constitute the minimum wages payable on Federal and federally assisted construction projects to laborers and mechanics of the specified classes engaged on contract work of the character and in the localities described therein.

Good cause is hereby found for not utilizing notice and public comment procedure thereon prior to the issuance of these determinations as prescribed in 5 U.S.C. 553 and not providing for delay in the effective date as prescribed in that section, because the necessity to issue current construction industry wage determinations frequently and in large volume causes procedures to be impractical and contrary to the public interest.

General wage determination decisions, and modifications and supersedeas decisions thereto, contain no expiration dates and are effective from their date of notice in the Federal Register, or on the date written notice is received by the agency, whichever is earlier. These decisions are to be used in accordance with the provisions of 29 CFR Parts 1 and 5. Accordingly, the applicable decision, together with any modifications issued, must be made a part of every contract for performance of the described work within the geographic area indicated as required by an applicable Federal prevailing wage law and 29 CFR Part 5. The wage rates and fringe benefits, notice of which is published herein, and which are contained in the Government Printing Office (GPO) document entitled ''General Wage Determinations Issued Under the Davis-Bacon and Related Acts,'' shall be the minimum paid by contractors and subcontractors to laborers and mechanics.

Any person, organization, or governmental agency having an interest in the rates determined as prevailing is encouraged to submit wage rate and fringe benefit information for consideration by the Department. Further information and self-explanatory forms for the purpose of submitting this data may be obtained by writing to the U.S. Department of Labor, Employment Standards Administration, Wage and Hour Division, Division of Wage Determinations, 200 Constitution Avenue, N.W., Room S–3014, Washington, D.C. 20210.

Modifications to General Wage Determination Decisions

The number of decisions listed in the Government Printing Office document entitled ''General Wage Determinations Issued Under the Davis-Bacon and Related Acts'' being modified are listed by Volume and State. Dates of publication in the Federal Register are in parentheses following the decisions being modified.

Volume I

Massachusetts
- MA960001 (March 15, 1996)
- MA960002 (March 15, 1996)
- MA960003 (March 15, 1996)
- MA960005 (March 15, 1996)
- MA960007 (March 15, 1996)
- MA960009 (March 15, 1996)
- MA960010 (March 15, 1996)
- MA960013 (March 15, 1996)
- MA960017 (March 15, 1996)
- MA960018 (March 15, 1996)
- MA960019 (March 15, 1996)
- MA960020 (March 15, 1996)
- MA960021 (March 15, 1996)

New Jersey
- NJ960002 (March 15, 1996)

NJ960003 (March 15, 1996)
NJ960004 (March 15, 1996)
NJ960015 (March 15, 1996)
NY960034 (March 15, 1996)
NY960047 (March 15, 1996)

Volume II

District of Columbia
DC960001 (March 15, 1996)
DC960003 (March 15, 1996)
Maryland
MD960001 (March 15, 1996)
MD960002 (March 15, 1996)
MD960010 (March 15, 1996)
MD960013 (March 15, 1996)
MD960015 (March 15, 1996)
MD960017 (March 15, 1996)
MD960021 (March 15, 1996)
MD960025 (March 15, 1996)
MD960031 (March 15, 1996)
MD960034 (March 15, 1996)
MD960035 (March 15, 1996)
MD960036 (March 15, 1996)
MD960042 (March 15, 1996)
MD960043 (March 15, 1996)
MD960046 (March 15, 1996)
MD960047 (March 15, 1996)
MD960048 (March 15, 1996)
MD960050 (March 15, 1996)
MD960053 (March 15, 1996)
MD960055 (March 15, 1996)
MD960056 (March 15, 1996)
MD960057 (March 15, 1996)
MD960058 (March 15, 1996)
Virginia
VA960014 (March 15, 1996)
VA960022 (March 15, 1996)
VA960025 (March 15, 1996)
VA960036 (March 15, 1996)
VA960042 (March 15, 1996)
VA960048 (March 15, 1996)
VA960050 (March 15, 1996)
VA960052 (March 15, 1996)
VA960058 (March 15, 1996)
VA960067 (March 15, 1996)
VA960078 (March 15, 1996)
VA960079 (March 15, 1996)
VA960104 (March 15, 1996)
VA960105 (March 15, 1996)

Volume III

Alabama
AL960004 (March 15, 1996)
AL960006 (March 15, 1996)
AL960008 (March 15, 1996)
AL960034 (March 15, 1996)
AL960044 (March 15, 1996)
Florida
FL960009 (March 15, 1996)
FL960012 (March 15, 1996)
FL960017 (March 15, 1996)
FL960032 (March 15, 1996)
FL960034 (March 15, 1996)
FL960046 (March 15, 1996)
FL960100 (March 15, 1996)
Kentucky
KY960001 (March 15, 1996)
KY960029 (March 15, 1996)
North Carolina
NC960008 (March 15, 1996)

Volume IV

Illinois
IL960001 (March 15, 1996)
IL960004 (March 15, 1996)
IL960007 (March 15, 1996)
IL960008 (March 15, 1996)
IL960009 (March 15, 1996)
IL960011 (March 15, 1996)
IL960012 (March 15, 1996)
IL960013 (March 15, 1996)
IL960023 (March 15, 1996)
Indiana
IN960001 (May 15, 1996)
IN960002 (March 15, 1996)
IN960003 (March 15, 1996)
IN960004 (March 15, 1996)
IN960005 (March 15, 1996)
IN960006 (March 15, 1996)
IN960017 (March 15, 1996)
IN960020 (March 15, 1996)
Minnesota
MN960007 (March 15, 1996)
MN960008 (March 15, 1996)
MN960059 (March 15, 1996)
MN960061 (March 15, 1996)
Ohio
OH960001 (March 15, 1996)
OH960002 (March 15, 1996)
OH960003 (March 15, 1996)
OH960027 (March 15, 1996)
OH960028 (March 15, 1996)
OH960029 (March 15, 1996)

Volume V

Iowa
IA960016 (March 15, 1996)
IA960032 (March 15, 1996)
Kansas
KS960006 (March 15, 1996)
KS960007 (March 15, 1996)
KS960008 (March 15, 1996)
KS960009 (March 15, 1996)
KS960010 (March 15, 1996)
KS960011 (March 15, 1996)
KS960012 (March 15, 1996)
KS960013 (March 15, 1996)
KS960015 (March 15, 1996)
KS960016 (March 15, 1996)
KS960018 (March 15, 1996)
KS960019 (March 15, 1996)
KS960020 (March 15, 1996)
KS960021 (March 15, 1996)
KS960022 (March 15, 1996)
KS960023 (March 15, 1996)
KS960025 (March 15, 1996)
KS960026 (March 15, 1996)
KS960028 (March 15, 1996)
KS960029 (March 15, 1996)
KS960035 (March 15, 1996)
KS960063 (March 15, 1996)
Louisiana
LA960001 (March 15, 1996)
LA960004 (March 15, 1996)
LA960005 (March 15, 1996)
LA960009 (March 15, 1996)
LA960012 (March 15, 1996)
LA960017 (March 15, 1996)
LA960018 (March 15, 1996)
Missouri
MO960001 (March 15, 1996)
MO960002 (March 15, 1996)
MO960003 (March 15, 1996)
MO960004 (March 15, 1996)
MO960005 (March 15, 1996)
MO960006 (March 15, 1996)
MO960007 (March 15, 1996)
MO960009 (March 15, 1996)
MO960010 (March 15, 1996)
MO960011 (March 15, 1996)
MO960013 (March 15, 1996)
MO960014 (March 15, 1996)
MO960015 (March 15, 1996)
MO960016 (March 15, 1996)
MO960017 (March 15, 1996)
MO960019 (March 15, 1996)
MO960020 (March 15, 1996)
MO960041 (March 15, 1996)
MO960042 (March 15, 1996)
MO960043 (March 15, 1996)
MO960047 (March 15, 1996)
MO960049 (March 15, 1996)
MO960052 (March 15, 1996)
MO960053 (March 15, 1996)
MO960054 (March 15, 1996)
MO960055 (March 15, 1996)
MO960056 (March 15, 1996)
MO960057 (March 15, 1996)
MO960058 (March 15, 1996)
MO960069 (March 15, 1996)
MO960060 (March 15, 1996)
MO960062 (March 15, 1996)
MO960063 (March 15, 1996)
MO960064 (March 15, 1996)
MO960065 (March 15, 1996)
MO960066 (March 15, 1996)
MO960067 (March 15, 1996)
MO960068 (March 15, 1996)
MO960069 (March 15, 1996)
MO960070 (March 15, 1996)
MO960072 (March 15, 1996)
Texas
TX960003 (March 15, 1996)
TX960005 (March 15, 1996)
TX960007 (March 15, 1996)
TX960010 (March 15, 1996)
TX960013 (March 15, 1996)
TX960016 (March 15, 1996)
TX960018 (March 15, 1996)
TX960019 (March 15, 1996)
TX960060 (March 15, 1996)
TX960063 (March 15, 1996)
TX960081 (March 15, 1996)
TX960096 (March 15, 1996)
TX960100 (March 15, 1996)
TX960114 (March 15, 1996)

Volume VI

California
CA960001 (March 15, 1996)
CA960002 (March 15, 1996)
CA960004 (March 15, 1996)
CA960027 (March 15, 1996)
CA960028 (March 15, 1996)
CA960029 (March 15, 1996)
CA960030 (March 15, 1996)
Hawaii
HI960001 (March 15, 1996)
Idaho
ID960003 (March 15, 1996)
ID960004 (March 15, 1996)
North Dakota
ND960004 (March 15, 1996)
Oregon
OR960001 (March 15, 1996)
OR960004 (March 15, 1996)
OR960017 (March 15, 1996)
South Dakota
SD960002 (March 15, 1996)
SD960024 (March 15, 1996)
SD960041 (March 15, 1996)
Washington
WA960001 (March 15, 1996)
WA960002 (March 15, 1996)
WA960003 (March 15, 1996)
WA960006 (March 15, 1996)
WA960007 (March 15, 1996)
WA960008 (March 15, 1996)
WA960010 (March 15, 1996)

WA960011 (March 15, 1996)

General Wage Determination Publication

General wage determinations issued under the Davis-Bacon and related Acts, including those noted above, may be found in the Government Printing Office (GPO) document entitled ''General Wage Determinations Issued Under The Davis-Bacon and Related Acts''. This publication is available at each of the 50 Regional Government Depository Libraries and many of the 1,400 Government Depository Libraries across the county.

The general wage determinations issued under the Davis-Bacon and related Acts are available electronically by subscription to the FedWorld Bulletin Board System of the National Technical Information Service (NTIS) of the U.S. Department of Commerce at (703) 487–4630.

Hard-copy subscriptions may be purchased from: Superintendent of Documents, U.S. Government Printing Office, Washington, D.C. 20402, (202) 512–1800.

When ordering hard-copy subscription(s), be sure to specify the State(s) of interest, since subscriptions may be ordered for any of all of the six separate volumes, arranged by State. Subscriptions include an annual edition (issued in January or February) which includes all current general wage determinations for the States covered by each volume. Throughout the remainder of the year, regular weekly updates are distributed to subscribers.

Signed at Washington, D.C. this 30th day of August 1996.

Philip J. Gloss,

Chief, Branch of Construction Wage Determinations.

[FR Doc. 96–22596 Filed 9–5–96; 8:45 am]

BILLING CODE 4510–27–M

Mine Safety and Health Administration

Petitions for Modification

The following parties have filed petitions to modify the application of mandatory safety standards under section 101(c) of the Federal Mine Safety and Health Act of 1977.

1. Old Ben Coal Company

[Docket No. M–96–72–C]

Old Ben Coal Company, 50 Jerome Lane, Fairview Heights, Illinois 62208 has filed a petition to modify the application of 30 CFR 75.382(a) (mechanical escape facilities) to its Spartan Mine (I.D. No. 11–00612) located in Randolph County, Illinois. The petitioner submits this modification to requests permission to continue using its existing escape facilities in both the material and belt slopes. The petitioner asserts that the proposed alternative method would provide at least the same measure of protection as would the mandatory standard.

2. Left Fork Mining, Inc.

[Docket No. M–96–73–C]

Left Fork Mining, Inc., P.O. Box 405, Arjay, Kentucky 40902 has filed a petition to modify the application of 30 CFR 75.1103–4 (automatic fire sensor and warning device system; minimum requirements general) to its Straight Creek No. 1 Mine (I.D. No. 15–12564) located in Bell County, Kentucky. The petitioner requests a modification of the standard to allow the use of one carbon monoxide monitoring device for monitoring a belt head and tailpiece when located adjacent to each other. The petitioner asserts that the proposed alternative method would provide at least the same measure of protection as would the mandatory standard.

3. Boone Resources, Inc.

[Docket No. M–96–74–C]

Boone Resources, Inc., P.O. Box 1005, Alabaster, Alabama 35007 has filed a petition to modify the application of 30 CFR 75.1700 (oil and gas wells) to its No. 1 Mine (I.D. No. 01–02908) located in Shelby County, Alabama. The petitioner proposes to plug and mine through oil and gas wells. The petitioner asserts that the proposed alternative method would provide at least the same measure of protection as would the mandatory standard.

4. Cumberland Resources Corporation

[Docket No. M–96–75–C]

Cumberland Resources Corporation, 9100 East Mineral Circle, P.O. Box 3299, Englewood, Colorado 80155–3299 has filed a petition to modify the application of 30 CFR 75.1103–4(a) (automatic fire sensor and warning device systems; installation minimum requirements) to its Cumberland Mine (I.D. No. 36–05018) located in Greene County, Pennsylvania. The petitioner proposes to install a low-level carbon monoxide detection system as an early warning fire detection system in all belt entries used as intake air courses. The petitioner asserts that the proposed alternative method would provide at least the same measure of protection as would the mandatory standard.

5. Franklin Collieries Inc.

[Docket No. M–96–76–C]

Franklin Collieries, Inc., Box 3875, Route 1498, Bevinsville, Kentucky 41606 has filed a petition to modify the application of 30 CFR 75.342 (methane monitors) to its No. 1 Mine (I.D. No. 15–16667) located in Knott County, Kentucky. The petitioner proposes to use hand-held continuous-duty methane and oxygen detectors on battery powered scoops instead of machine mounted methane monitors. The petitioner states that this petition is based on the safety of the miners and not primarily an economic advantage or benefit.

6. Daves Branch, Inc.

[Docket No. M–96–77–C]

Daves Branch, Inc., P.O. Box 249, Stanville, Kentucky 41659 has filed a petition to modify the application of 30 CFR 75.342 (methane monitors) to its Mine No. 4 (I.D. No. 15–16218) located in Knott County, Kentucky. The petitioner proposes to use hand-held methane and oxygen detectors on battery powered scoops instead of machine-mounted methane monitors. The petitioner states that this petition is based on the safety of the miners and not primarily an economic advantage or benefit.

7. Daves Branch, Inc.

[Docket No. M–96–78–C]

Daves Branch, Inc., P.O. Box 249, Stanville, Kentucky 41659 has filed a petition to modify the application of 30 CFR 75.342 (methane monitors) to its No. 5 Mine (I.D. No. 15–17637) located in Knott County, Kentucky. The petitioner proposes to use hand-held continuous-duty methane and oxygen detectors instead of machine-mounted methane monitors on battery powered scoops. The petitioner states that this petition is based on the safety of the miners and not primarily an economic advantage or benefit.

8. Utah Fuel Company

[Docket No. M–96–79–C]

Utah Fuel Company, P.O. Box 719, Helper, Utah 84526 has filed a petition to modify the application of 30 CFR 75.362(d)(2) (on-shift examination) to its Skyline Mine No. 1 (I.D. No. 42–01435) and its Skyline Mine No. 3 (I.D. No. 42–01566) both located in Carbon County, Utah. The petitioner requests a modification of the standard to permit use of a 15-foot extendable probe to measure for methane. The petitioner asserts that application of the mandatory safety standard would result in a diminution of safety to the miners.

9. Bledsoe Coal Corporation

[Docket No. M–96–80–C]

Bledsoe Coal Corporation, 100 Coal Drive, London, Kentucky 40741 has filed a petition to modify the application of 30 CFR 75.360(b)(5) (preshift examination) to its Mine No. 4 (I.D. No. 15–11065) located in Leslie County, Kentucky. The petitioner requests a modification of the standards to allow the use of a Pyott-Boone mine monitor and control system for monitoring each seal along the intake air course, and to allow elimination of preshift examinations at seals along the intake air course. The petitioner proposes to have an atmospheric monitoring system sensor located at each seal along the intake air course that would be capable of testing for methane and oxygen deficiency; to visually examined the seals on a weekly basis; and to identify the sensor and visually examine the seal if a signal from the atmospheric monitoring system is activated. The petitioner asserts that the proposed alternative method would provide at least the same measure of protection as would the mandatory standard.

10. Kiah Creek Mining Company

[Docket No. M–96–81–C]

Kiah Creek Mining Company, P.O. Box 1409, Pikeville, Kentucky 41502 has filed a petition to modify the application of 30 CFR 75.364(b)(4) (weekly examination) to its No. 8 Mine (I.D. No. 15–17190) located in Pike County, Kentucky. Due to deteriorating conditions in the No. 2 and 3 seals, the area cannot be traveled safely. The petitioner proposes to evaluate the area at the toe of the fall to determine the quantity and quality of air flowing across the fall and by the seals. The petitioner asserts that the proposed alternative method would provide at least the same measure of protection as would the mandatory standard.

11. Drummond Company, Inc.

[Docket No. M–96–82–C]

Drummond Company, Inc., P.O. Box 10246, Birmingham, Alabama 35209 has filed a petition to modify the application of 30 CFR 75.313 (main mine fan stoppage with persons underground) to its Shoal Creek Mine (I.D. No. 01–02901) located in Jefferson County, Alabama. The petitioner requests a modification of the standard to permit an alternative plan when the main mine fans are operating at 80 percent of their normal air quantity and pressure in the event that a main mine fan stops and ventilation is at least 80 percent restored through the auxiliary diesel drive on the stopped fan, and a minimum of 40,000 cfm is maintained in the last open crosscut of each continuous miner section, and 50,000 cfm in the last open crosscut of each long wall section; to hang a curtain in each place where auxiliary ventilation was used and have a minimum of 5,000 cfm directed to any working face; to withdraw all persons from the mine except for those persons responsible for hanging curtains in places where auxiliary fans and fire bossing and pumping and, after ventilation is established, immediately withdraw those persons assigned to hang curtains; to deenergize underground electric power circuits except for those necessary to operate the elevator to withdraw persons from the mine and those who operate the main sump pumps and permissible submersible pumps; and to deenergize the circuits necessary to withdraw persons as they are withdrawn. The petitioner asserts that the proposed alternative method would provide higher level of safety for the workforce and provide a safer mine environment should a power failure occur to the main mine fans.

12. G & P Contractors, Inc.

[Docket No. M–96–83–C]

G & P Contractors, Inc., HC 81, Box 2446, Barbourville, Kentucky 40906 has filed a petition to modify the application of 30 CFR 75.342 (methane monitors) to its Engle Hollow No. 1 (I.D. No. 15–17777) located in Knox County, Kentucky. The petitioner proposes to use hand-held continuous-duty methane and oxygen indicators instead of machine-mounted methane monitors on permissible three-wheel tractors with drag bottom buckets. The petitioner states that this petition is based on the safety of the miners involved and not primarily an economic advantage or benefit.

13. G & P Contractors, Inc.

[Docket No. M–96–84–C]

G & P Contractors, Inc., HC 81, Box 2446, Barbourville, Kentucky 40906 has filed a petition to modify the application of 30 CFR 75.342 (methane monitors) to its Engle Hollow No. 2 mine (I.D. No. 15–17778) located in Knox County, Kentucky. The petitioner proposes to use hand-held continuous-duty methane and oxygen indicators instead of machine-mounted methane monitors on permissible three-wheel tractors with drag bottom buckets. The petitioner states that this petition is based on the safety of the miners involved and not primarily an economic advantage or benefit.

14. Murriel Don Coal, Inc.

[Docket No. M–96–85–C]

Murriel Don Coal, Inc., 134 Dixie Building, P.O. Box 3636, Pikeville, Kentucky 41852 has filed a petition to modify the application of 30 CFR 75.342 (methane monitors) (I.D. No. 15–17511) located in Knott County, Kentucky. The petitioner proposes to use hand-held continuous-duty methane detectors instead of machine-mounted methane monitors on permissible DC-powered machines, S & S model 482 scoops. The petitioner states that this petition is submitted based not only from an economic point of view but also from a safety standpoint.

15. Utah Fuel Company

[Docket No. M–96–86–C]

Utah Fuel Company, P.O. Box 719, Helper, Utah 84526 has filed a petition to modify the application of 30 CFR 75.344(a)(2) (compressors) to its Skyline No. 1 Mine (I.D. No. 42–01435) and its Skyline No. 3 Mine (I.D. No. 42–01566) located in Carbon County, Utah. The petitioner requests a modification of the standard to permit the use of audible and visual alarms to be located at the surface office building where assigned persons can respond to the alarms instead of at unmanned locations underground. The petitioner asserts that the application of the mandatory safety standard would result in a diminution of safety to the miners.

16. Utah Fuel Company

[Docket No. M–96–87–C]

Utah Fuel Company, P.O. Box 719, Helper, Utah has filed a petition to modify the application of 30 CFR 75.340(a)(1)(iii) to its Skyline No. 1 Mine (I.D. No. 42–01435) and its Skyline No. 3 Mine (I.D. No. 42–01566) located in Carbon County, Utah. The petitioner requests a modification of the standard to permit the use of audible and visual alarms to be located at the surface office building where assigned persons can respond to the alarms instead of at unmanned locations underground. The petitioner asserts that application of the mandatory safety standard would result in a diminution of safety to the miners.

17. Stephen Shingara Jr. Coal Company

[Docket No. M–96–88–C]

Stephen Shingara Jr. Coal Company, R.D. #1, Box 369, Shamokin, Pennsylvania 17872 has filed a petition to modify the application of 30 CFR 75.1400 (hoisting equipment; general) to its No. 1 Slope Mine (I.D. No. 36–02280) located in Northumberland County, Pennsylvania. The petitioner proposes

to use a slope conveyance (gunboat) in transporting persons without installing safety catches or other no less effective devices, but instead use an increased rope strength/safety factor and secondary safety rope connection in place of such devices. The petitioner asserts that the proposed alternative method would provide at least the same measure of protection as would the mandatory standard.

18. Mountain Coal Company

[Docket No. M–96–89–C]

Mountain Coal Company, P.O. Box 591, Somerset, Colorado 81434 has filed a petition to modify the application of 30 CFR 75.1100–2(e)(2) to its West Elk Mine (I.D. No. 05–03672) located in Gunnison County, Colorado. The petitioner requests a modification of the standard to allow the use of either two portable fire extinguishers or one fire extinguisher having at least twice the minimum capacity specified in 30 CFR 75.1100–1(e) at each temporary electrical installation. The petitioner asserts that the proposed alternative method would provide at least the same measure of protection as would the mandatory standard.

19. Harlan Cumberland Coal Company

[Docket No. M–96–90–C]

Harlan Cumberland Coal Company, Grays Knob, Kentucky 40829 has filed a petition to modify the application of 30 CFR 75.310(a)(3) (installation of main mine fans) to its C–2 Mine (I.D. No. 15–07201) located in Harlan County, Kentucky. The petitioner proposes to have a person at a location other than at the mine where the fan signal can be seen or heard while anyone is underground instead of at a surface location at the mine. The petitioner asserts that the proposed alternative method would provide at least the same measure of protection as would the mandatory standard.

20. Roberts Bros. Coal Company, Inc.

[Docket No. M–96–91–C]

Roberts Bros. Coal Company, Inc., P.O. Box 397, Mortons Gap, Kentucky 42440 has filed a petition to modify the application of 30 CFR 75.360 (preshift examination) to its Cardinal No. 2 Mine (I.D. No. 15–17216) located in Hopkins County, Kentucky. The petitioner proposes to examine electrical installations ''on-shift'' to insure that the electrical installations are examined throughout the shift instead of conducting the examinations three hours prior to the oncoming shift. The petitioner asserts that the proposed alternative method of on-shift examinations would not diminish the safety of the miners.

21. Eastern Mingo Coal Company

[Docket No. M–96–92–C]

Eastern Mingo Coal Company, P.O. Box 119, Naugatuck, West Virginia 25685 has filed a petition to modify the application of 30 CFR 75.503 (18.41)(f) (permissible electric face equipment; maintenance) to its Big Branch Mine (I.D. No. 46–05978) located in Mingo County, West Virginia. The petitioner proposes to replace a padlock on battery plug connectors on mobile battery-powered machines with a threaded ring and a spring loaded device to prevent the plug connector from accidentally disengaging while under load. The petitioner states that application of the mandatory safety standard would result in diminution of safety to the miners. In addition, petitioner asserts that the proposed alternative method would provide at least the same measure of protection as would the mandatory standard.

22. Western Mingo Coal Company

[Docket No. M–96–93–C and M–96–94–C]

Western Mingo Coal Company, P.O. Box 119, Naugatuck, West Virginia 25685 has filed a petition to modify the application of 30 CFR 75.503(18.41)(f) to its Northern Mingo No. 1 Mine (I.D. No. 46–08147) and its Northern Mingo No. 2 Mine (I.D. No. 46–08369) both located in Mingo County, West Virginia. The petitioner proposes to replace a padlock on battery plug connectors on mobile battery-powered machines with a threaded ring and a spring loaded device to prevent the plug connector from accidentally disengaging while under load. The petitioner states that application of the standard would result in a diminution of safety to the miners. In addition, the petitioner asserts that the proposed alternative method would provide at least the same measure of protection as would the mandatory standard.

23. Arch of Illinois

[Docket No. M–96–95–C]

Arch of Illinois, P.O. Box 308, Percy, Illinois 62272–0308 has filed a petition to modify the application of 30 CFR 75.362(d)(1) to its Conant Mine (I.D. No. 11–02886) located in Perry County, Illinois. The petitioner proposes to use an intrinsically safe atmospheric monitoring system (AMS), a Trolex Explosive Gas Sensor Model No. TX3266 or an equivalent AMS, to test for methane before the equipment is energized, and to continuously detect and test for methane at 20-minute intervals while the mining equipment is energized in the working face. This would eliminate personnel exposure to the potential hazards of the face area during the tests. The petitioner states that application of the mandatory safety standard would result in a diminution of safety to the miners. In addition, the petitioner asserts that the proposed alternative method would provide at least the same measure of protection as would the mandatory standard.

24. Arch of Illinois

[Docket No. M–96–96–C]

Arch of Illinois, P.O. Box 308, Percy, Illinois 62272–0308 has filed a petition to modify the application of 30 CFR 75.331(d)(1) to its Conant Mine (I.D. No. 11–02886) located in Perry County, Illinois. The petitioner proposes to use a ''blowing'' auxiliary permissible fan and tubing with the Archveyor™ System to ventilate the wing cut face area. The petitioner has outlined in this petition specific procedures to be followed when utilizing its alternative method. The petitioner states that application of the mandatory safety standard would result in a diminution of safety to the miners. In addition, the petitioner asserts that the proposed alternative method would provide at least the same measure of protection as would the mandatory standard.

25. Arch of Illinois

[Docket No. M–96–97–C]

Arch of Illinois, P. O. Box 308, Percy, Illinois 62272–0308 has filed a petition to modify the application of 30 CFR 75.1107–4(a)(1) to its Conant Mine (I.D. No. 11–02886) located in Percy County, Illinois. The petitioner proposes to use an operator/technician, the Archveyor™ mining system's Program Logic Controlled (PLC) computer, and the continuous monitoring of the Archveyor™ mining system while energized, as a fire suppression device, during secondary mining. The petitioner proposes to have an operator/technician continuously stationed at the system's control cab area while the system is in operation to continuously control and monitor the Archveyor™ mining system. The petitioner has outlined in this petition specific procedures to be followed when utilizing its alternative method. The petitioner states that application of the mandatory safety standard would result in a diminution of safety to the miners. In addition, the petitioner asserts that the alternative method would provide at least the same measure of protection as would the mandatory standard.

Request for Comments

Persons interested in these petitions may furnish written comments. These comments must be filed with the Office of Standards, Regulations, and Variances, Mine Safety and Health Administration, Room 627, 4015 Wilson Boulevard, Arlington, Virginia 22203. All comments must be postmarked or received in that office on or before October 7, 1996. Copies of these petitions are available for inspection at that address.

Dated: August 30, 1996.

Patricia W. Silvey,

Director, Office of Standards, Regulations, and Variances.

[FR Doc. 96–22759 Filed 9–5–96; 8:45 am]

BILLING CODE 4510–43–P

Occupational Safety and Health Administration

Vermont State Standards; Notice of Approval

1. Background

Part 1953 of Title 29, Code of Federal Regulations, prescribes procedures under Section 18 of the Occupational Safety and Health Act of 1970 (hereinafter called the Act) by which the Regional Administrator for Occupational Safety and Health (hereinafter called Regional Administrator) under a delegation of authority from the Assistant Secretary of Labor for Occupational Safety and Health (hereinafter called the Assistant Secretary), (29 CFR 1953.4), will review and approve standards promulgated pursuant to a State Plan, which has been approved in accordance with Section 18(c) of the Act and 29 CFR Part 1902. On October 16, 1973, notice was published in the Federal Register (38 FR 28658) of the approval of the Vermont State Plan and the adoption of Subpart U to Part 1952 containing the decision. The Vermont State Plan provides for the adoption of Federal standards as State standards after:

a. Publishing for two (2) successive weeks, in three (3) newspapers having general circulation in the center, northern and southern parts of the State, an intent to amend the State Plan by adopting the standard(s).

b. Review of standards by the Interagency Committee on Administrative Rules, State of Vermont.

c. Approval by the Legislative Committee on Administrative Rules, State of Vermont.

d. Filing in the Office of the Secretary of State, State of Vermont.

e. The Secretary of State publishing, not less than quarterly, a bulletin of all standard(s) adopted by the State.

The Vermont State Plan provides for the adoption of State standards which are at least as effective as comparable Federal standards promulgated under Section 6 of the Act. By letters dated July 26, 1995, August 7, 1995, and September 5, 1995, from Mary S. Hooper, Commissioner, Vermont Department of Labor and Industry, and by letters dated January 22, 1996, and June 4, 1996, from Paul Harrington, Deputy Commissioner, Vermont Department of Labor and Industry, to Mr. John T. Phillips, Regional Administrator, and incorporated as part of the plan, the State submitted an updated State standard standards identical to 29 CFR parts 1910, 1915, 1917, 1918, 1926 and 1928, and subsequent amendments thereto, as described below:

(1) Addition to 29 CFR parts 1910, 1915, 1917, 1918, 1926 and 1928, Retention of DOT Markings, Placards, and Labels, Final Rule, (59 FR 36695, July 19, 1994).

(2) Revision to 29 CFR parts 1910, 1915 and 1926, Occupational Exposure to Asbestos, Final Rule, (59 FR 41057, August 10, 1994, and 59 FR 9624, February 21, 1994).

(3) Revision to 29 CFR parts 1910 and 1926, Hazardous Waste Operations and Emergency Response; Final Rule, (59 FR 43268, August 22, 1994).

(4) Addition to 29 CFR parts 1915 and 1926, Standard for Cadmium in Shipyard Employment and in Construction Work; Reprint With Corrections and Technical Amendments; Final Rule, (59 FR 146, January 3, 1994).

(5) Revision to 29 CFR parts 1910, 1915, 1917, 1918, 1926 and 1928, Hazard Communication; Final Rule, (59 FR 6169, February 9, 1994).

(6) Addition to 29 CFR parts 1910 and 1928, Logging Operations; Final Rule (59 FR 51741, October 12, 1994); and Corrections and Technical Amendments (59 FR 47022, September 8, 1995).

(7) Amendment to 29 CFR Parts 1910, 1915 and 1926, Occupational Exposure to Asbestos; Corrections; Final Rule (60 FR 33974, June 29, 1995).

These standards became effective on July 11, 1995, July 10, 1995, March 13, 1995, September 23, 1995, February 3, 1996, and February 19, 1996, respectively, pursuant to Section 224 of Vermont State Law.

2. Decision

Having reviewed the State's submissions in comparison with the Federal standards, it has been determined that the State's standards are identical to the Federal standards and, accordingly, are approved.

3. Location of Supplement for Inspection and Copying

A copy of the standards supplements, along with the approved plan, may be inspected and copied during normal business hours at the following locations: Office of the Regional Administrator, John F. Kennedy Federal Building, Room E–340, Boston, Massachusetts 02203; Office of the Commissioner, State of Vermont, Department of Labor and Industry, 120 State Street, Montpelier, Vermont, 05602; and the Office of State Programs, 200 Constitution Avenue, NW., Room N–3700, Washington, D.C. 20210.

4. Public Participation

Under 29 CFR 1953.2(c), the Assistant Secretary may prescribe alternative procedures to expedite the review process or for other good cause which may be consistent with applicable laws. The Assistant Secretary finds that good cause exists for not publishing the supplement to the Vermont State Plan as a proposed change and making the Regional Administrator's approval effective upon publication for the following reason:

1. The standards were adopted in accordance with the procedural requirements of the State Law which included public comment, and further public participation would be repetitious.

This decision is effective September 6, 1996.

Authority: Sec. 18, Pub. L. 91–596, 84 Stat. 1608 (29 U.S.C. 667).

Signed at Boston, Massachusetts, this 19th day of July 1996.

John T. Phillips,

Regional Administrator.

[FR Doc. 96–22826 Filed 9–5–96; 8:45 am]

BILLING CODE 4510–26–P

Pension and Welfare Benefits Administration

[Application No. D–10200, et al.]

Proposed Exemptions; Chase Manhattan Bank

AGENCY: Pension and Welfare Benefits Administration, Labor.

ACTION: Notice of proposed exemptions.

SUMMARY: This document contains notices of pendency before the Department of Labor (the Department) of proposed exemptions from certain of the prohibited transaction restriction of the Employee Retirement Income Security

Act of 1974 (the Act) and/or the Internal Revenue Code of 1986 (the Code).

Written Comments and Hearing Requests

All interested persons are invited to submit written comments or request for a hearing on the pending exemptions, unless otherwise stated in the Notice of Proposed Exemption, within 45 days from the date of publication of this Federal Register Notice. Comments and request for a hearing should state: (1) The name, address, and telephone number of the person making the comment or request, and (2) the nature of the person's interest in the exemption and the manner in which the person would be adversely affected by the exemption. A request for a hearing must also state the issues to be addressed and include a general description of the evidence to be presented at the hearing. A request for a hearing must also state the issues to be addressed and include a general description of the evidence to be presented at the hearing.

ADDRESSES: All written comments and request for a hearing (at least three copies) should be sent to the Pension and Welfare Benefits Administration, Office of Exemption Determinations, Room N–5649, U.S. Department of Labor, 200 Constitution Avenue, N.W., Washington, D.C. 20210. Attention: Application No. stated in each Notice of Proposed Exemption. The applications for exemption and the comments received will be available for public inspection in the Public Documents Room of Pension and Welfare Benefits Administration, U.S. Department of Labor, Room N–5507, 200 Constitution Avenue, N.W., Washington, D.C. 20210.

Notice to Interested Persons

Notice of the proposed exemptions will be provided to all interested persons in the manner agreed upon by the applicant and the Department within 15 days of the date of publication in the Federal Register. Such notice shall include a copy of the notice of proposed exemption as published in the Federal Register and shall inform interested persons of their right to comment and to request a hearing (where appropriate).

SUPPLEMENTARY INFORMATION: The proposed exemptions were requested in applications filed pursuant to section 408(a) of the Act and/or section 4975(c)(2) of the Code, and in accordance with procedures set forth in 29 CFR Part 2570, Subpart B (55 FR 32836, 32847, August 10, 1990). Effective December 31, 1978, section 102 of Reorganization Plan No. 4 of 1978 (43 FR 47713, October 17, 1978) transferred the authority of the Secretary of the Treasury to issue exemptions of the type requested to the Secretary of Labor. Therefore, these notices of proposed exemption are issued solely by the Department.

The applications contain representations with regard to the proposed exemptions which are summarized below. Interested persons are referred to the applications on file with the Department for a complete statement of the facts and representations.

The Chase Manhattan Bank (National Association) Located in New York, New York

Exemption Application No. D–10200

Proposed Exemption

The Department is considering granting an exemption under the authority of section 408(a) of the Act and section 4975(c)(2) of the Code and in accordance with the procedures set forth in 29 CFR Part 2570 Subpart B (55 FR 32836, 32847, August 10, 1990).

Section I—Transactions

If the exemption is granted, the restrictions of sections 406(a) of the Act and the sanctions resulting from the application of section 4975 of the Code, by reason of section 4975(c)(1)(A) through (D) of the Code, shall not apply to the following transactions, provided that the conditions set forth in Section II below are met:

(a) Any acquisition or sale of ''emerging market'' securities (the Securities), and any repurchase agreement involving such Securities, which occurs between The Chase Manhattan Bank, N.A. (Chase) or its Affiliates and the IBM Retirement Plan (the IBM Plan), to which Chase or an Affiliate is a party in interest under the Act at the time of the transaction; and

(b) Certain repurchase agreements involving the Securities which occurred between the IBM Plan and Chemical Bank, N.A. (Chemical) that were outstanding as of March 31, 1996, the date of the merger between Chemical and Chase (the Merger). (All references herein to Chase which refer to the period of time after March 31, 1996 shall include Chemical.)

Section II—Conditions

(a) The assets of the IBM Plan involved in the transactions described in Section I(a) and I(b) above are managed by Wasserstein Perella Emerging Markets Asset Management L.P. (W–P), as the independent qualified fiduciary for the IBM Plan;

(b) W–P, as the IBM Plan's independent fiduciary and investment manager for the assets invested in the Securities, negotiates the terms of such transactions on behalf of the IBM Plan and makes the decision to have the IBM Plan enter into any such transactions with Chase;

(c) W–P, as the IBM Plan's independent fiduciary and investment manager for the assets invested in the Securities, monitors the investments made by the IBM Plan in such Securities and takes whatever actions are necessary to protect the interests of the IBM Plan;

(d) Neither Chase nor an Affiliate has discretionary authority or control with respect to the investment of the IBM Plan's assets involved in the transactions or renders investment advice (within the meaning of 29 CFR 2510.3–21(c)) with respect to those assets;

(e) In any transaction where the IBM Plan acquires a Security from Chase, the IBM Plan pays a price which is no greater than the fair market value of such Security, as determined by W–P in accordance with either W–P's internal valuation process or independent third party sources (such as independent broker-dealers and market-makers dealing in such Securities);

(f) In any transaction where the IBM Plan sells a Security to Chase, the IBM Plan receives a price which is no less than the fair market value of such Security, as determined by W–P in accordance with either W–P's internal valuation process or independent third party sources (such as independent broker-dealers and market-makers dealing in such Securities);

(g) The repurchase agreements between the IBM Plan and Chase are entered into pursuant to a written agreement between the parties which describes all of the material terms and conditions for such transactions, including the rights and obligations of each party, and is consistent with the specific guidelines established by the IBM Plan's named fiduciary for transactions involving the Securities;

(h) All repurchase agreements between the IBM Plan and Chase, including those agreements which were in place at the time of the Merger with Chemical, have terms and conditions which are at least as favorable to the IBM Plan as terms and conditions which would exist in a similar transaction with an unrelated party;

(i) All other terms of each transaction described above in Section I(a) are not less favorable to the IBM Plan than the terms available in an arm's-length transaction between unrelated parties;

(j) W–P does not engage in, or commit to sell, any uncovered put or call options (including, but not exclusive to, ''straddles'' and ''strangles'') in transactions with Chase on behalf of the IBM Plan;

(k) Any transactions involving the use of leverage by W–P, on behalf of the IBM Plan, do not exceed the specific guidelines established by the IBM Plan's named fiduciary under its investment management agreement with W–P;

(l) No brokerage commission, sales commission, or similar compensation other than the particular dealer mark-up for the Security, is paid to Chase by the IBM Plan with regard to such transactions; and

(m) The amount of the IBM Plan's assets involved in the transactions described in Section I(a) and I(b) represents no more than two (2) percent of the total assets of the IBM Plan.

Section III—Definitions

(a) The term ''Chase'' refers to The Chase Manhattan Bank (National Association) and its Affiliates, as defined below, including Chemical Bank, N.A., effective as of March 31, 1996, pursuant to the terms of the Merger which occurred on such date.

(b) The term ''Chemical'' refers to Chemical Bank, N.A., as it existed as an independent entity prior to March 31, 1996;

(c) The term ''Affiliate'' refers to affiliates of Chase, including entities controlling, controlled by, or under common control with Chase as well as successors to such entities.

(d) The term ''control'' for purposes of the above definition of ''Affiliate'' means the power to exercise a controlling influence over the management or policies of an entity.

(e) The term ''emerging market'' or ''emerging markets'' refers to capital markets in developing or less developed countries that are, with the exception of Mexico, not member countries of the Organization for Economic Cooperation and Development.

(f) The term ''Security'' refers to certain ''emerging market'' securities and instruments issued in, or on behalf of, an ''emerging market'' (including both corporate and sovereign issuers of debt securities as well as corporate issuers of equity securities). For purposes of the proposed exemption, such ''Securities'' would include publicly traded or privately placed debt, equity, or convertible securities, certain put and call options (as described herein), collateralized bonds, Brady Bonds and Eurobonds.

(g) The term ''IBM Plan'' refers to the IBM Retirement Plan, a defined benefit pension plan covering employees of the International Business Machines Corporation and its affiliates (IBM), which is an employee benefit plan covered by the Act.

(h) The term ''W–P'' refers to Wasserstein Perella Emerging Markets Asset Management L.P. and its affiliates, including the Emerging Capital Markets Division of Wasserstein Perella Securities, Inc.

EFFECTIVE DATE: The exemption, if granted, will be effective as of the date that this notice of proposed exemption is published in the Federal Register for all transactions described in Section I(a), and as of March 31, 1996, for the transactions described in Section I(b).

Summary of Facts and Representations

1. The subject exemption request is made on behalf of Chase and its Affiliates (referred to hereafter as ''the Applicant'') for certain transactions with the IBM Plan involving securities and instruments issued in, or on behalf of, various emerging capital markets in developing or less developed countries throughout the world.

2. Chase is a national banking association and acts as a non-discretionary trustee of the IBM Retirement Plan Trust (the IBM Trust), a trust that holds the assets of the IBM Plan.[1] Chase's subsidiary, Chase Investment Bank Limited (CIBL) is an underwriter of, and a dealer and market-maker in, various securities and instruments, including securities of emerging market issuers (i.e. Securities). CIBL is hereafter not referred to separately but is one of Chase's Affiliates included within the definition of the term ''Affiliate'' in Section III(c) above.

3. The Applicant states that ''emerging markets'' are defined to include, for purposes of the proposed exemption, capital markets in developing or less developed countries that are, with the exception of Mexico, not member countries of the Organization for Economic Cooperation and Development (OECD). The Securities are securities and instruments issued in, or on behalf of, an ''emerging market'' (including both corporate and sovereign issuers of debt securities as well as corporate issuers of equity securities). These ''Securities'' would include publicly traded or privately placed debt, equity, or convertible securities, certain put and call options, collateralized bonds, Brady Bonds and Eurobonds (as described in greater detail below).

4. The Applicant states that as a major bank with branches in 58 countries, Chase has a physical presence in most of the principal emerging market countries and has access to local market information through such means as review of local press and access to local business and government officials. The Applicant represents that it engages in extensive corporate and sovereign research relevant to emerging markets. As a result the Applicant states that it is a major market-maker in the Securities and is a source of premier research and market reports to its customers that are interested in such markets.

The Applicant represents that it is also a major underwriter of new issues in emerging market securities and a prominent secondary market-maker for all issuers of emerging market securities and instruments. The Applicant states that because trading in these Securities is not done primarily on an exchange and there are few definitive industry reports, it is difficult to quantify the exact amount of the Applicant's share of various markets. However, the Applicant estimates that prior to the Merger between Chase and Chemical, it accounted for as much as 30 percent of the trading volume in the Eurobond market and as much as 15 to 20 percent of the trading volume in the sovereign debt market. The Applicant notes that according to figures made public by major sovereign bond dealers for 1994, Chase's trading volume of $268.4 billion ranked it second in that market. After the Merger, Chase became even more of a presence in emerging markets and an even larger dealer/underwriter of the Securities because Chemical had also been a major dealer/underwriter for such Securities.

5. Wasserstein Perella Emerging Markets Asset Management L.P. (i.e. W–P) is an investment advisor registered with the Securities and Exchange Commission (SEC) under the Investment Advisors Act of 1940 and provides discretionary asset management services for various institutional clients, including employee benefit plans. W–P is managed by the Emerging Capital Markets Division of Wasserstein Perella Securities, Inc. (WPS). WPS is a broker-dealer registered with the SEC. The Grantchester Securities Division of WPS

[1] With respect to all Securities acquired by the IBM Plan pursuant to this proposed exemption, the applicant represents that the requirements of section 404(b) of the Act and the regulations thereunder will be met (see 29 CFR 2550.404b-1). In this regard, section 404(b) of the Act states that no fiduciary may maintain the indicia of ownership of any assets of a plan outside the jurisdiction of the district courts of the United States, except as authorized by regulation by the Secretary of Labor. The Department is providing no opinion herein as to whether such requirements will be met.

is one of the leading dealers in the high yield debt securities market. In addition, WPS, through its equities division, has been increasing its underwriting and market-making in emerging market equity securities as well as adding to its equity research and trading presence in this market. For example, W–P states that WPS's equities division has been a manager on a number of significant syndicate transactions involving emerging market securities. The WPS Emerging Capital Markets Division also has a presence in the sales and trading of pre-Brady loans, Brady Bonds, other debt instruments of less developed countries, local currency products and equities issued by businesses in such markets. W–P states that the principal officials of W–P have extensive experience in structuring transactions involving emerging market securities and in managing investments in, and trading, such securities.

6. W–P currently serves as an investment manager for certain assets of the IBM Plan. Pursuant to its reserved powers as named fiduciary under a trust indenture between IBM Plan and Chase, as trustee, the International Business Machines Corporation (IBM) has appointed W–P as an investment manager with respect to a portion of the IBM Trust (the W–P Account). The terms of the investment management agreement (the Agreement) governing the W–P Account provide W–P with full discretion to manage the IBM Plan's assets held in the Account, including the power to give investment directions to Chase as the trustee of such assets. The Agreement also requires W–P to manage the W–P Account in accordance with investment guidelines established by IBM, as the named fiduciary for the IBM Plan. These investment guidelines (the Guidelines) call for W–P to invest all of the assets in the W–P Account in emerging market securities of the type described herein (i.e. the Securities).[2] The Guidelines also prescribe that no more than 10 percent of the W–P Account's assets may be invested in such Securities which are equity securities. Thus, W–P must invest at least 90 percent of the IBM Plan's assets managed in the W–P Account in Securities which are either corporate or sovereign debt securities.

The Guidelines state that the Securities that are debt securities may be either dollar-denominated or non dollar denominated, and equity securities may be either listed or unlisted. The Guidelines also contain geographic restrictions and restrictions requiring diversification of issuers with respect to such Securities held in the W–P Account's portfolio. The Guidelines have specific provisions regarding the use by the portfolio of, and exposure of the portfolio to, certain instruments known as ''derivatives'' (as discussed in greater detail below).[3]

In addition, the Guidelines expressly permit the use of leverage. Thus, when managing the IBM Plan's assets in the W–P Account, W–P may use portfolio Securities as collateral for a ''loan'' (i.e. repurchase agreement) the proceeds of which will be used to acquire more Securities. In this regard, the Guidelines require that borrowings against the portfolio may not exceed 150 percent of the portfolio's net asset value, but are usually only 75–80 percent of such value. Such transactions are entered into by the IBM Plan with large banks, such as Chase and Chemical. These ''loans'' are structured as repurchase agreements (REPOs). As discussed further below, W–P entered into certain REPOs relating to the Securities with Chemical, on behalf of the IBM Plan, which were outstanding as of March 31, 1996, the date of the Merger.

Finally, the Guidelines require that the investment performance of the W–P Account be measured by investment objectives which call for returns of the Account to exceed certain specified benchmarks, such as the Lehman Brothers Aggregate Bond Index and the Salomon Brothers Brady Bond Index, with lower than normal volatility of returns.[4]

7. The Applicant states that, as of December 1993, the IBM Plan had approximately 289,829 participants and beneficiaries. The total assets of the IBM Plan at that time were approximately $28.2 billion. The assets of the IBM Plan currently managed in the W–P Account are approximately $400 million, an amount which represents less than 1.5 percent of the IBM Plan's total assets. Thus, the amount of the IBM Plan's assets involved in the transactions described herein with Chase will not represent more than two (2) percent of the total assets of the IBM Plan.

The Applicant represents that the IBM Plan's assets under management by W–P exceed 20 percent of W–P's total assets under management. Therefore, W–P is unable to rely on Prohibited Transaction Exemption (PTE) 84–14 (49 FR 9494, March 13, 1984), a class exemption for certain ''plan asset'' transactions which are determined by an independent qualified professional asset manager (''QPAM'').[5] W–P represents that it is a QPAM, as defined under Section V(a) of PTE 84–14, and would otherwise be able to use that

[2] The Department is expressing no opinion in this proposed exemption regarding whether the acquisition and holding of any of the Securities by the IBM Plan would violate the fiduciary responsibility provisions of Part 4 of Title I of the Act.

The Department notes that section 404(a) of the Act requires, among other things, that a fiduciary of a plan act prudently, solely in the interest of the plan's participants and beneficiaries, and for the exclusive purpose of providing benefits to participants and beneficiaries when making investment decisions on behalf of a plan. Section 404(a) of the Act also states that a plan fiduciary should diversify the investments of a plan so as to minimize the risk of large losses, unless under the circumstances it is clearly prudent not to do so.

Nor is the Department providing any views herein as to whether a particular category of investments or investment strategy would be considered prudent or in the best interests of a plan as required by section 404 of the Act. The determination of the prudence of a particular investment or investment course of action must be made by a plan fiduciary after appropriate consideration to those facts and circumstances that, given the scope of such fiduciary's investment duties, the fiduciary knows or should know are relevant to the particular investment or investment course of action involved, including the plan's potential exposure to losses and the role the investment or investment course of action plays in that portion of the plan's investment portfolio with respect to which the fiduciary has investment duties. The Department also notes that in order to act prudently in making such investment decisions, a plan fiduciary must consider, among other factors, the availability, risks and potential return of alternative investments for the plan. Thus, a particular investment by a plan, which is selected in preference to other alternative investments, would generally not be prudent if such investment involves a greater risk to the security of a plan's assets than comparable investments offering a similar return or result.

[3] The term ''derivatives'', as used in the Guidelines, includes: (i) Futures contracts; (ii) options on futures contracts; (iii) over-the-counter options on eligible Securities; (iv) interest rate caps, floors, and swaps; and (v) currency forwards, futures and options. However, as discussed herein, W–P's use of derivatives for assets of the IBM Plan is generally limited to the purchase of put and call options, and the sale of covered put and call options, and does not involve futures contracts, options on futures contracts, or swap transactions. Accordingly, the Department is providing no relief under this proposed exemption for transactions involving ''derivatives'' other than the purchase of put and call options and the sale of covered put and call options described herein.

[4] As a general rule, W–P states that its investment objectives are to target a 15 percent to 20 percent annualized rate of return for investors and to strive to produce steady returns with a focus on reduction of volatility.

[5] The Department is expressing no opinion in this proposed exemption as to whether the subject transactions between these parties would meet all of the conditions required for an exemption under either PTE 84–14 or any other class exemption, such as PTE 75–1 (40 FR 50845, October 31, 1975). The Department notes that the exemptive relief provided in PTE 84–14 for transactions engaged in on behalf of a plan by a QPAM, acting as the plan's fiduciary, is not available if the plan's assets (combined with any other assets of plans maintained by the same employer or employee organization which are managed by the QPAM) represent more than 20 percent of the total client assets managed by the QPAM at the time of the transaction (see Part I(e) of PTE 84–14).

class exemption for the transactions described herein involving Chase.

The Applicant maintains that W–P is entirely independent of Chase and its Affiliates. Specifically, the Applicant states that there is no ownership or management relationship between W–P and Chase or its Affiliates. The Applicant and W–P engage in arm's-length trading of emerging market securities involving accounts other than the W–P Account for the IBM Plan. However, the Applicant represents that they have no contractual or other arrangements that would cause them to be viewed other than as acting entirely independent of one another. In particular, the Applicant states that Chase, as a non-discretionary trustee of the IBM Trust, lacks any discretionary authority over investment or management of the IBM Plan's assets, including the assets in the W–P Account. Neither Chase nor an Affiliate has, or has exercised, any authority to appoint or terminate W–P as an investment manager for the IBM Plan.

8. The Applicant seeks an exemption to permit W–P, as an investment manager and independent fiduciary for the IBM Plan, to engage in transactions involving emerging market securities and instruments (i.e. the Securities) with Chase, a party in interest with respect to the IBM Plan as a result of being a non-discretionary trustee of the Plan's assets. Such transactions could include purchases, sales and exchanges of the Securities between Chase and the IBM Plan, as well as REPOs that may be entered into between the parties in connection with the IBM Plan's acquisition and holding of the Securities. In addition, the Applicant seeks a retroactive exemption for certain REPOs involving the Securities which occurred between the IBM Plan and Chemical that were not prohibited transactions at the time such transactions were entered into, but which became prohibited transactions as of March 31, 1996, the date of the Merger with Chase. As noted above, Chase was and continues to be a party in interest (i.e. a non-discretionary trustee) with respect to the IBM Plan and Chemical, as a result of the Merger, became a party in interest to the IBM Plan on March 31, 1996.

Retroactive Relief for Certain REPOs

9. With respect to the retroactive relief necessary as a result of the Merger, the Applicant states that the IBM Plan had engaged in several REPOs with Chemical whereby the Plan's acquisition of new Securities was being financed in part by a REPO with Chemical. The Applicant represents that a number of the REPOs were terminated prior to the Merger to avoid additional prohibited transactions with respect to the IBM Plan. However, as of March 31, 1996, there were five (5) open positions with Chemical involving the IBM Plan's acquisition of Securities.

These open positions involved the following Securities: (i) A $3.5 million issue of Bulgarian IABs (Interest Arrears Bonds), paying a floating interest rate based on LIBOR[6] with maturity scheduled for July 28, 2011, issued under the terms of Bulgaria's Brady Bond Plan (as discussed further below) completed in July 1994; (ii) a $4 million issue of Certificates of Deposit (CDs) issued by Argentina Banco de la Nacion, which matured on May 15, 1996; (iii) a $2.8 million issue of Brazil Bamerindus Eurobonds issued by a private Brazilian bank, which matured on July 15, 1996; (iv) a $605,000 issue of Brazil Bamerindus Euro Medium Term Notes, which matured on June 5, 1996; and (v) a $1.5 million issue of Morocco Tranche A Loans, which are bank loans made to the Kingdom of Morocco as part of a debt restructuring and are due to mature in January 2009. In this regard, the Securities described above in (ii)–(iv) have matured and were paid in full.

10. With respect to the terms of the REPOs with Chemical, the Applicant states that the REPO value[7] vis a vis the Face Amount of the Securities was determined based on the market value of the underlying Securities and the advance rate extended by the REPO counterparty (i.e. Chemical). For example, at the time that the terms of the REPO on the Bulgaria IAB Bonds were set (i.e. the Latest REPO Date),[8] the market value of the Bonds (including any accrued interest) was equal to approximately 48.3 percent of the Face Amount (i.e. $1,690,238 of the $3,500,000 Face Amount), and the advance rate given by Chemical was 80 percent (i.e. Chemical was willing to lend the IBM Trust 80 percent of the market value of the Bonds that were given to Chemical as collateral). Therefore, the REPO value of the Securities on this transaction was calculated as follows:

Advance Rate (80%) × Market Value ($1,690,238.17) = $1,352,190.97.

Thus, the IBM Trust was able to receive $1,352,190.97 in cash under this REPO in exchange for the Bonds for a stated period. The IBM Trust was committed to ''repurchase'' the Bonds at the end of the REPO's term (i.e. by paying Chemical back the money advanced plus interest at a certain agreed upon rate), unless the REPO was ''rolled over''. W–P states that the other REPOs with Chemical involving the Securities mentioned above operated under similar terms.

W–P represents that it attempts to obtain the cheapest REPO financing available consistent with the creditworthiness of the counterparty, since the cheaper the cost of borrowing through REPOs, the higher the returns will be to the IBM Trust. W–P states that it contacts potential counterparties to bid on REPOs and negotiates the best available terms with each counterparty. Because the credit-standing of the IBM Trust is excellent, W–P is able to negotiate very favorable terms for these REPOs, including low interest rates. W–P represents that all REPO interest rates negotiated with Chemical, as with other counterparties, were rates that were at least as favorable to the IBM Trust as rates available from other counterparties of similar credit standing.

The Mechanics and Concept Behind REPOs

11. With respect to W–P's philosophy and purpose for using leverage, W–P explains that assets purchased for the IBM Trust are often pledged to a creditworthy counterparty (typically a single A rated institution or better), who in turn provides financing against the asset they hold as collateral. W–P uses the standard Public Securities Association (PSA) REPO agreement, which is used not only for emerging market securities but for other securities. W–P generally utilizes leverage for the IBM Trust in order to increase the portfolio's exposure to low duration/low volatility assets (with maturities typically less than one (1) year and high credit quality—most often from sovereign issuers). W–P states that its long-term performance demonstrates that exposure to such low duration assets provides a cushion of stable returns. Thus, W–P states that while leverage is traditionally used as a means

[6] ''LIBOR'' is a widely used interest rate index and refers to the London Interbank Offered Rate. LIBOR is derived from current market quotations offered by major European banks for short-term (i.e. one-month, six-month, etc.) Eurodollar deposits.

[7] The term ''REPO value'' refers to that amount of money, expressed as a percentage of the market value of the Securities involved, which a bank, as a REPO counterparty, would be willing to ''loan'' or ''advance'' to the owner of the Securities (i.e. a plan investor) under a particular REPO.

[8] The initial REPO date was the date that the repurchase contract was initially settled—i.e. the date on which Chemical received the Securities and, in exchange for the Securities, extended cash to the IBM Trust. The Applicant explains that REPOs are often set for a specified term, such as one month, three months, etc. At the end of that term, the REPO counterparty (Chemical) will often give the other party (IBM Plan) the option of renewing the REPO for another term (i.e. ''rolling it over''). Thus, the ''latest rollover date'' refers to the last time a REPO transaction was rolled over.

of gaining access to a greater overall exposure (i.e. risk) for a portfolio via borrowed funds, W–P utilizes the leverage vehicle to mitigate, rather than magnify, the portfolio's volatility.[9]

With respect to the selection of assets for a REPO, W–P represents that it seeks leverage on assets on which it receives the most attractive terms—the lowest interest rates, highest advance rates and most flexible terms. W–P states that generally it is able to receive the best REPO terms on Brady Bonds (see discussion below), because they are the most liquid assets in the market for emerging market securities. However, W–P states that because it has a general strategy for building a portfolio with a foundation in low duration/low volatility assets, capital preservation is the main goal. In this regard, W–P targets a specific degree of leverage based on the cash needs of the portfolio at particular times.

With respect to choosing the counterparties, W–P states that REPO transactions are entered into only with high-quality institutions that actively trade in emerging market instruments. Selection of these REPO counterparties depends on a variety of factors, including the rates charged on financing, the percentage of leverage advanced, the flexibility of terms, and operational ease. After credit is determined to be suitable, pricing (i.e. the rate charged on the leverage) is generally the most important variable in selecting a REPO counterparty.

With respect to the mechanics of the REPO agreement, W–P states that the agreement: (i) Basically outlines the procedures for transferring Securities to and from the REPO counterparty; (ii) defines terms contained in the REPO confirmations, such as the interest rate charged; (iii) sets the maturity date for the REPO; (iv) covers the terms and conditions for margin calls and substitution of assets; and (v) covers each party's remedies under any events of default. W–P states that the only real risk to the IBM Trust that stems specifically from the REPO agreement is that the REPO counterparty, who holds the Securities as collateral, could renege on its obligations under the agreement (i.e. the counterparty could fail to return the collateral to the IBM Trust when the REPO matures). W–P notes that it is for this reason that it is careful in selecting the REPO counterparty and chooses only reliable, creditworthy counterparties for these transactions.

[9] The Department is providing no opinion or views herein on the use of such leveraging as a means to mitigate portfolio risk or volatility.

Types of Securities Involved in Transactions Between the IBM Plan and Chase

12. The Applicant has provided the following general descriptions of each type of Security or instrument involved in the emerging market transactions that would be covered by the proposed exemption.

(i) Brady Bonds. The most liquid asset class in fixed income emerging market securities, these Bonds were issued in exchange for outstanding sovereign bank loans in a number of developing countries as part of the debt reduction/restructuring plans named after former Treasury Secretary Nicholas Brady. Brady Bond plans have been implemented since 1989 in over a dozen countries in Latin America, Eastern Europe, Asia and Africa. The current outstanding market for Brady Bonds equals approximately $140 billion, and annual turnover exceeds $2 trillion, according to the Emerging Markets Trader's Association. Brady Bonds have maturities ranging from 6 years to 30 years, and many (including all par and discount bonds) carry principal and interest collateral guarantees in the form of U.S. Treasury securities. W–P states that a large secondary market exists for these Bonds, and financing can be obtained on virtually all Brady Bond assets.

(ii) Eurobonds/144A. Bonds denominated in U.S. dollars or other currencies issued by sovereign or corporate entities in many countries. These bonds usually mature within 2 to 5 years and are issued in sizes ranging from $50 million to $1 billion. The Eurobond market is an important source of capital for multinational corporations and foreign governments, particularly in emerging market countries. These bonds are Euroclearable—i.e. transferable to U.S. investors via the Depository Trust Company. Eurobonds are not registered with the SEC, but are available for purchase by U.S. persons that meet certain SEC requirements under SEC Rule 144A.[10] W–P states that leverage is available on larger issues and there is a growing REPO market.

(iii) Commercial Bank Loans. These assets are direct or syndicated bank loans, usually to governments or quasi-governmental entities, that are transferred between buyer and seller via assignment or participation agreements. Some loans (e.g. Jamaica, Morocco) are current, though most are in default on interest and principal payments (e.g. Russian Vnesh loans, Yugoslavia, Vietnam). Defaulted loans are purchased in the secondary market at a deep discount to the face value of the loan and are purchased with the expectation of a ''Brady plan'' type restructuring that will convert the loans into new, current securities. The loans are accounted for in the same way as other Securities in the portfolio and they are marked-to-market daily. Liquidity varies from loan to loan, but prices are quoted daily. W–P states that leverage is available on the more liquid loans (Morocco), so that they can be used in REPO transactions as described above.

(iv) Commercial Paper/Certificates of Deposit. Short-term (30–160 day) debt obligations of banks or corporations in emerging market countries with interest and principal typically paid in U.S. dollars. The interest rates on these debt obligations are usually pegged to LIBOR. W–P states that leverage is available at times from counterparties that sell the assets.

(v) Short-term Sovereign Debt.

(A) Local Currency: Local treasury debt issued on an ongoing basis by foreign governments with interest rates often based on LIBOR. Maturities generally range from 30 days to 2 years.

(B) Dollar-denominated or dollar-hedged: Some countries (e.g. Argentina) have outstanding debt denominated in U.S. dollars (issued in exchange for frozen US dollar bank deposits), with remaining maturities ranging from 2 months to 12 years. Other countries (e.g. Ecuador, Brazil) offer dollar-hedged structures that guarantee specific foreign exchange exit levels. These latter instruments are new issues, and have maturities ranging from 3 months to 1 year.

(vi) Equities. Exchange-traded stocks of companies in emerging market countries, denominated (for the most part) in that country's local currency.

(vii) Convertibles. Debt instruments issued by companies (usually with maturities of 3 to 10 years) that contain provisions whereby the bondholder can exchange their bonds for a set number of shares of the issuer's stock.

[10] SEC Rule 144A requires that investors have available to them offering memoranda. Transactions covered under a Rule 144A offering are limited to ''qualified institutional buyers'' (i.e. large institutional investors, such as pension plans) that are considered to be sophisticated investors capable of insisting that they be furnished with adequate disclosure.

In this regard, the Department notes that a plan fiduciary in meeting its obligations to act prudently, as required under section 404(a) of the Act, should seek to obtain any relevant information that it believes necessary in order to determine whether a particular investment in emerging market securities, such as Eurobonds, would be appropriate for and in the best interests of the plan.

Processes Used in Determining Which Securities To Acquire for the IBM Trust

13. W–P represents that in addition to following the Guidelines set forth for the IBM Trust, its overall goal as an investment manager for emerging market securities is to obtain superior absolute and risk-adjusted returns for the IBM Plan relative to certain key fixed income indices. As noted earlier, in addition to investing in directional assets, such as those included in the Salomon Brothers Brady Bond Index,[11] W–P builds a low duration portfolio (i.e. by investing in securities with short maturities issued by high-quality borrowers) upon which it adds moderate leverage.[12] This low duration portfolio insulates the overall portfolio from a portion of the volatility often experienced in emerging market securities. W–P's approach to managing risk is to focus primarily on the duration of the Securities in the portfolio. W–P states that in times of high volatility, it does not exit the market for the Securities but instead lowers the portfolio's average maturity profile because lower duration assets will generally exhibit lower volatility. Thus, W–P's strategies place particular emphasis on the liquidity needs of each portfolio.

14. With respect to the use of derivatives, W–P represents that it engages in the trading of certain instruments that would be considered derivatives when it determines that it is prudent to do so to achieve its goals. These derivatives include: (i) The sale of covered call options to enhance the return on portfolio Securities; (ii) the purchase of call options to obtain exposure to particular assets without the necessity of using large sums of money; and (iii) the purchase of put options to mitigate market value deterioration for portfolio Securities. W–P also engages in two strategies that provide incremental income while exposing the IBM Trust, as the option writer, to additional market exposure. These strategies involve: (i) The purchase and sale of ''straddles''—the simultaneous purchase or sale of a put and call option with identical strike prices on the same Security); and (ii) the purchase and sale of ''strangles''—the simultaneous purchase or sale of a put and call option with strike prices set at a specific amount which is ''out-of-the-money''.[13]

However, W–P represents that it rarely enters into trades of uncovered options (puts or calls) for any client accounts.[14] Therefore, as a condition of the proposed exemption, W–P has committed not to sell any uncovered put or call options, including (but not exclusive to) ''straddles'' and ''strangles'', in transactions with Chase for assets of the IBM Plan.

W–P represents that the use of derivatives in the W–P Account for the IBM Trust is generally limited to the purchase and sale of put and call options on Brady Bonds and Commercial Bank Loans. These are over-the-counter (OTC) options. W–P states that the counterparties involved are always large, creditworthy emerging markets' broker-dealers, similar to those used for REPO transactions. W–P typically uses such options for one of three purposes:

(i) To hedge long positions, through the sale of covered call options, or the purchase of put options;

(ii) To earn incremental income through the sale of covered calls and covered puts when W–P judges that the market will move little, or at least less than the premium available from the sale of such options; and

(iii) To obtain a leveraged exposure to an asset through the purchase of call options, without downside risk beyond the cost of the option.

15. With respect to the process for buying and selling Securities, W–P states that it has real time access through electronic media to data which provides pricing for assets traded in the emerging markets. W–P also deals routinely with other market-makers that provide bid/offer quotations on demand. When buying or selling a Security, W–P typically obtains prices from three different counterparties and chooses the best price. In instances where a less actively traded Security is purchased, W–P looks at assets of the same credit quality, size and duration to verify its relative value. W–P represents that its central mandate as an IBM Plan fiduciary is to secure the ''best'' price available on any trade. In this regard, W–P states that it is not compelled to deal with any particular party, including Chase, should that party not provide competitive pricing for the Securities involved. Under the conditions of the proposed exemption, when the IBM Plan acquires a Security from Chase, the IBM Plan must not pay a price which is greater than the fair market value of such Security, as determined by W–P in accordance with either W–P's internal valuation process or independent third party sources (such as independent broker-dealers and market- makers dealing in such Securities). In addition, in any transaction where the IBM Plan sells a Security to Chase, the IBM Plan must receive a price which is no less than the fair market value of such Security, as determined by W–P in accordance with such valuation processes or sources. W–P notes that no brokerage commission, sales commission, or similar compensation other than the particular dealer mark-up for the Security, will be paid to Chase by the IBM Plan with regard to such transactions. W–P will endeavor to achieve the best possible prices for the Securities involved in transactions with Chase and will use its expertise in emerging markets to ensure that the particular mark-ups paid to Chase are reasonable based on W–P's valuations of the Securities.

16. W–P acknowledges its duties, responsibilities and liabilities in acting as a fiduciary under the Act for the IBM Trust in connection with its investments and represents that it will ensure that the conditions of this exemption, if granted, are met.

W–P represents that it will ensure that the terms of each transaction with Chase are at least as favorable to the IBM Plan as the terms which would exist in a similar transaction with an unrelated party. W–P states that it will determine, prior to each transaction, that the acquisition and holding of the particular Securities is in the best interests of the IBM Plan, and will ensure that each transaction is consistent with the IBM Plan's investment guidelines, objectives, and liquidity needs. W–P states further that there will be proper diversification of the investments in the IBM Plan portfolio to prevent unnecessary exposure to the risks involved in a particular market sector. W–P notes that its use of leverage (i.e. REPOs) for the IBM Plan assets will be moderate and is usually about half of the maximum allowable under the Guidelines. As a condition of the proposed exemption, W–P represents that it will not exceed the maximum amount of leverage

[11] Such Securities are generally Brady Bonds, Pre-Brady loans and some equities relating to companies in these emerging markets.

[12] The low duration Securities are generally short-term sovereign debt, Eurobonds, Bank CDs and Commercial Paper.

[13] For example, W–P states that if the market price of the underlying Security is 85 percent of a certain designated price, then a ''2-point out-of-the-money strangle'' on that asset would include a put option with a strike price of 83 percent and a call option with a strike price of 87 percent.

[14] To the extent that W–P chooses to enter into any uncovered options or other ''derivatives'' with the assets of the IBM Plan managed in the W–P Account with counterparties other than Chase, the Department is providing no opinion in this proposed exemption as to whether such transactions would be consistent with the prudence requirements of section 404(a) of the Act and the regulations thereunder. For a current statement of the Department's views on the use of ''derivatives'' by pension plans, see DOL Letter from Olena Berg, Assistant Secretary for Pension and Welfare Benefits, to The Honorable Eugene A. Ludwig, Comptroller of the Currency, dated March 21, 1996.

allowable under the Guidelines (i.e. 150 percent of the net asset value of the Securities involved in the particular REPO). Finally, W–P states that while it may utilize certain derivatives for the IBM Plan's account under the Guidelines, such use does not normally involve selling uncovered put or call options and will not involve any such transactions with Chase. W–P states that it does not use futures contracts or other derivatives, other than those previously discussed, to hedge risks as part of its investment management strategies.

W–P represents that it will monitor all of the investments made by the IBM Plan in the Securities or other instruments and will take whatever actions are necessary to protect the interests of the IBM Plan.

17. In summary, the Applicant represents that the transactions described herein have met and will continue to meet the statutory criteria under section 408(a) of the Act because, among other things: (a) The assets of the IBM Plan involved in the transactions are managed by W–P, an independent qualified fiduciary for the IBM Plan; (b) W–P, as the IBM Plan's independent fiduciary and investment manager for the assets invested in the Securities, negotiates the terms of such transactions on behalf of the IBM Plan and makes the decision to have the IBM Plan enter into any such transactions with Chase; (c)W–P monitors the investments made by the IBM Plan in such Securities and takes whatever actions are necessary to protect the interests of the IBM Plan; (d) neither Chase nor an Affiliate has discretionary authority or control with respect to the investment of the IBM Plan's assets involved in the transactions or renders investment advice (within the meaning of 29 CFR 2510.3–21(c)) with respect to those assets; (e) all terms and conditions of the transactions between the parties on behalf of the IBM Plan, including the prices paid or received by the IBM Plan for any Securities and the interest rates paid by the IBM Plan for any REPOs, are at least as favorable to the IBM Plan as the terms and conditions that would exist in an arm's-length transaction between unrelated parties; (f) the REPOs between the IBM Plan and Chase are entered into pursuant to a written agreement between the parties which describes all of the material terms and conditions for such transactions, including the rights and obligations of each party, and is consistent with the specific guidelines established by the IBM Plan's named fiduciary for transactions involving the Securities; (g) W–P does not engage in, or commit to sell, any uncovered put or call options in transactions with Chase on behalf of the IBM Plan and adheres to all of the investment guidelines established for the IBM Plan by the Plan's named fiduciary; (h) no brokerage commission, sales commission, or similar compensation other than the particular dealer mark-up for the Security, is paid to Chase by the IBM Plan with regard to such transactions; and (i) the amount of the IBM Plan's assets involved in the transactions represents no more than two (2) percent of the total assets of the IBM Plan.

FOR FURTHER INFORMATION CONTACT: Ms. Karin Weng or Mr. E. F. Williams of the Department, telephone (202) 219–8881 or 219–8194, respectively. (These are not toll-free numbers.)

International Brotherhood of Electrical Workers Local Union 613 (IBEW), Local 613 Defined Contribution Pension Fund (the Fund), Located in Atlanta, Georgia

[Application No. D–10225]

Proposed Exemption

The Department is considering granting an exemption under the authority of section 408(a) of the Act and section 4975(c)(2) of the Code and in accordance with the procedures set forth in 29 CFR Part 2570, Subpart B (55 FR 32847, August 10, 1990). If the exemption is granted, the restrictions of sections 406(a), 406(b) (1) and (2) and the sanctions resulting from the application of section 4975 of the Code by reason of section 4975(c)(1) (A) through (E) of the Code shall not apply to the proposed sale (the Sale) of a certain parcel of improved real property (the Property) from the Fund to Mr. Charles W. Eason, Sr., a party in interest with respect to the Fund provided that the following conditions are met: (1) The fair market value of the Property is established by an independent and qualified real estate appraiser; (2) Mr. Eason will pay the greater of: the fair market value of the Property at the time of the transaction or $123,000; (3) The Sale will be a one-time transaction for cash; and (4) The Fund will pay no fees or commissions associated with the Sale.

Summary of Facts and Representations

1. The Fund is a multi-employer defined contribution plan. As of December 31, 1994, the Fund had approximately 2,592 participants and assets of $72,773,801. The Fund is maintained pursuant to collective bargaining agreements between the IBEW and employers of members of the IBEW. The Fund trustees are comprised of a Board of Trustees consisting of three representatives of the IBEW and three representatives of the employers. Mr. Eason is a member of the Board of Trustees of the Fund.

2. The Property is located at 1249 Jennie Lane, Lilburn, Georgia and consists of a single-family dwelling that has been converted to office use and a detached garage. The Fund acquired the Property from Bowman Electric, Inc. (Bowman). Bowman originally purchased the Property in 1986 from James and Alice Yancey subject to a promissory note issued to the Yanceys secured by a deed to secure debt dated February 4, 1986.

Bowman was required to pay benefit contributions to the Fund and other multi-employer funds (the Other Funds) and dues to the IBEW pursuant to a collective bargaining agreement. Bowman became delinquent with respect to the contributions and dues owed to the Fund, the Other Funds, and the IBEW. The Fund, the Other Funds and the IBEW took steps to collect the money owed by Bowman. Specifically, Bowman owed the Fund contributions in the amount of $5,529.07. As a result, Bowman executed a promissory note dated August 10, 1993 payable to the Fund, the Other Funds and the IBEW.[15] This promissory note was secured by a second-in-priority deed to secure debt and security agreement dated August 10, 1993 on the Property. Bowman defaulted on the promissory note increasing the money owed to the Fund by $3,987 (This amount reflects the contributions Bowman failed to pay from August 10, 1993, the date Bowman executed a promissory note and gave the Fund, the Other Funds and the IBEW a second mortgage as security for the debt through the date of foreclosure.) The Fund, the Other Funds and the IBEW began non-judicial foreclosure proceedings.

During these proceedings, the Fund, the Other Funds and the Union discovered that Bowman had also defaulted on the Yancey's promissory note, and that the Yancey's began foreclosure proceedings. The applicants represent that if the Yanceys were to foreclose on the first mortgage on the Property, the second mortgage held by the Fund, the Other Funds and the

[15] The applicant has not requested and the Department has not provided exemptive relief for the promissory note issued by Bowman to the Fund, the Other Funds and the IBEW. In this regard, the applicant represents that the actions taken to collect outstanding fringe benefit contributions, including the execution of the promissory note, are covered by Part A of Prohibited Transaction Exemption (PTE) 76–1 (41 FR 12740, March 26, 1976) which pertains to Delinquent Employer Contributions. However, the Department expresses no opinion herein on whether such transactions are covered by Part A of PTE 76–1.

Union would have been extinguished and they would have lost their interest in the Property. In order to protect their interest in the Property, the Fund, the Other Funds and the Union could have attempted to purchase the Property at the Yancey's foreclosure proceedings. However, to avoid the uncertainties of such a purchase, the Fund negotiated an agreement in which the Fund paid the Yanceys approximately $74,035 to acquire the Yancey's first-in-priority interest in the Property. The Fund, the Other Funds and the IBEW completed foreclosure proceedings on the second mortgage and acquired title to the Property subject to the first mortgage, owned by the Fund. Percentage ownership interests in the Property were assigned in accordance with the amounts Bowman owed to the respective entities. Upon the sale of the Property, once the Fund's first mortgage is paid off, the remaining sale proceeds will be divided among the Fund, the Other Funds and the IBEW in accordance with their respective percentage ownership interests in the Property. The Fund's ownership interest in the Property equals 31.8%.

3. The Property was appraised by Mr. Glenn Keaton, Jr., MIA of Keaton and Company, an independent real estate appraisal firm located in Atlanta, Georgia. Mr. Keaton determined that the market value of the Property as of December 1995 is $110,000. In his appraisal report, Mr. Keaton defined market value as the most probable price which a property should bring in a competitive and open market under all conditions requisite to a fair sale, the buyer and seller each acting prudently and knowledgeably, and assuming the price is not affected by undue stimulus.

4. The Fund has proposed to sell the Property to Mr. Eason for $123,000 in a one-time cash transactions. Assuming the Property is sold for that amount, the Fund will receive $74,035.38 (the amount paid by the Fund to acquire the first mortgage from the Yanceys) plus approximately $15,585.44 (this amount represents 31.8% of the remaining $48,964.62 sales proceeds and will provide the Fund with enough money to recover the delinquent contributions owed by Bowman which currently total $9,516.48 and the Fund's share of property taxes and assessments on the Property totaling $1,399.04.) The applicant represents that the Fund no longer wishes to be in the business of owning and/or managing rental income properties. Further, the applicant believes that the Sale will provide the Fund with the opportunity to divest itself of a non-liquid asset and to replace it with a liquid asset.

5. In summary, the applicant represents that the proposed transaction will satisfy the criteria for an exemption under section 408(a) of the Act because: (a) The fair market value of the Property is established by an independent and qualified real estate appraiser; (b) Mr. Eason will pay the greater of the fair market value of the Property at the time of the transaction or $123,000; (c) The Sale will be a one-time transaction for cash; and (d) The Fund will pay no fees or commissions associated with the Sale.

FOR FURTHER INFORMATION CONTACT: Allison Padams of the Department, telephone (202) 219–8971. (This is not a toll-free number.)

Huggler & Silverang Profit Sharing Plan (the Plan) Located in Philadelphia, Pennsylvania

[Application No. D–10238]

Proposed Exemption

The Department is considering granting an exemption under the authority of section 408(a) of the Act and section 4975(c)(2) of the Code and in accordance with the procedures set forth in 29 CFR Part 2570, Subpart B (55 FR 32836, 32847, August 10, 1990). If the exemption is granted the restrictions of sections 406(a) and 406(b)(1) and (b)(2) of the Act and the sanctions resulting from the application of section 4975 of the Code, by reason of section 4975(c)(1)(A) through (E) of the Code shall not apply to the proposed cash sale (the Sale) by the Plan of two 5 percent limited partnership interest interests (collectively, the Interests) in Rosemont Square Associates, L.P. (the Partnership), one to Mr. David H. Huggler and the second to Mr. Kevin J. Silverang, respectively, parties in interest with respect to the Plan; provided (1) the Sale is a one-time transaction for cash, (2) the Plan pays no commissions nor incurs any expenses in connection with the proposed transaction, and (3) the Plan receives as consideration for the Sale no less than the fair market value of the Interests as of the date of the Sale.

Summary of Facts and Representations

1. The Plan is a defined contribution plan with individual accounts which are self-directed by the respective participants as to the investment of the assets. The sponsoring employer of the Plan is Huggler & Silverang, P.C., a Pennsylvania professional corporation, a law firm that discontinued operations effective April 30, 1995. After the sponsoring employer discontinued operations it disbanded, and the Plan distributed all assets of the Plan to terminated participants except for the Interests held in the individual accounts of Messrs. Huggler and Silverang, respectively. Each account of the two remaining participants in the Plan holds a 5 percent limited partnership interest in the Partnership that the applicants represent has a fair market value of $186,010, respectively.

2. The applicants, Messrs. Huggler and Silverang, represent that on October 17, 1991, each of their respective individual accounts in the Plan acquired a 5 percent Interest in the Partnership by each tendering to the Partnership as consideration a 40 percent limited partnership interest, each valued at $125,000, in another limited partnership, Saber Associates, a Pennsylvania limited partnership.

The applicants request an administrative exemption from the prohibited transaction provisions of the Act to enable each of them to purchase for $186,010 in cash the Interests from their respective individual accounts in the Plan. The applicants intend to terminate the Plan and roll over the cash assets remaining in their individual accounts in the Plan to Individual Retirement Accounts (IRAs). The applicants represent that they have not been able to find and engage a trustee-custodian willing to accept and hold their respective Interests for a reasonable annual fee.

The applicants represent that the proposed transaction is in the best interests of the Plan and its participants and beneficiaries because the Plan will be able to terminate and roll-over its remaining cash assets into IRAs for the last two participants. Also, they represent that their rights as participants will be protected by the objective determination of the fair market value of the Interests by the president of the general partner of the Partnership.

3. The Interests have been appraised, as of August 1, 1996, and determined to have a fair market value of $186,010, respectively. The appraisal was done by Mr. Stephen W. Bajus, who is the president of Rosemont Associates, Ltd., a Pennsylvania corporation and general partner of the Partnership.

Mr. Bajus represents that he is independent of the Plan and its sponsoring employer, and although he has been a client of the sponsor of the Plan and the current law firm of Messrs. Huggler and Silverang, his relationships never generated revenues that exceeded 2 percent of the total yearly revenues of either law firm. He further represents that his relationships never enabled the parties to control or influence his actions as an independent appraiser of the Interests. Mr. Bajus further

represents that there is no market for trading activity in the Interests and never has been since the initial establishment of the Partnership. Mr. Bajus represents that the actual value of the Interests should be determined by reference to the only asset possessed by the Partnership, which is the Rosemont Square Mall located in Lower Merion Township, Montgomery County, Pennsylvania.

The Rose Square Mall was appraised on September 28, 1994, by H. Bruce Thompson, Jr. and Associates, Inc. of Bryn Mawr, Pennsylvania and determined to have a fair market value of $10,300,000.

Mr. Bajus represents that the methodology that he employed in his appraisal of the fair market value of the Interests involved subtracting the mortgaged indebtedness of $6,579,798, as of July 31, 1996, from the fair market value of $10,300,000 of the Rosemont Square Mall to determine the total equity interests of $3,720,202 that the Partnership possessed on August 1, 1996. Mr. Bajus then represents that he determined that each 5 percent ownership in the Partnership has a fair market value equal to $186,010, respectively.

4. In summary, the applicant represents that the proposed transaction will satisfy the criteria of section 408(a) of the Act because (a) the Sale of the Interests involves a one-time transaction for cash; (b) the Plan will not incur the payment of any commissions nor incur any expenses from the Sale; (c) the Plan will be able to terminate and roll-over its remaining cash assets into two IRAs for the benefit of the two remaining participants; (d) the Interests in the Partnership have been appraised by the president of the general partner of the Partnership; and (e) the Plan will receive as consideration for the Sale no less than the fair market value of the Interests as of the date of the Sale.

Notice to Interested Persons: Because Messrs. Huggler and Silverang, the applicants, are the sole participants of the Plan, it has been determined that there is no need to distribute the notice of proposed exemption to interested persons. Comments and requests for a hearing are due thirty (30) days after publication of this notice in the Federal Register.

FOR FURTHER INFORMATION CONTACT: Mr. C. E. Beaver of the Department, telephone (202) 219–8881. (This is not a toll-free number.)

Acme 401(k) Retirement Savings Plan (the Plan) Located in Scottsdale, Arizona

[Application No. D–10270]

Proposed Exemption

The Department is considering granting an exemption under the authority of section 408(a) of the Act and section 4975(c)(2) of the Code and in accordance with the procedures set forth in 29 CFR part 2570, Subpart B (55 FR 32836, 32847, August 10, 1990). If the exemption is granted the restrictions of sections 406(a) and 406 (b)(1) and (b)(2) of the Act and the sanctions resulting from the application of section 4975 of the Code, by reason of sections 4975(c)(1) (A) through (E) of the Code shall not apply to the proposed cash sale (the Sale) by the Plan of a 2.86% interest (the Interest) in the Arizona Equities V Real Estate Investment Trust (the REIT) to RSC Holdings, Inc. (RSC), sponsor of the Plan and a party in interest with respect to the Plan; provided the following conditions are satisfied: (1) The Sale is a one-time transaction for cash; (2) the Plan does not incur any expenses in connection with the Sale; and (3) the Plan receives as consideration from the Sale the greater of: (a) the fair market value of the REIT Interest as determined by a qualified independent appraiser at the time of the Sale or, (b) the Plan's total investment in the Interest in the amount of $50,572.

Summary of Facts and Representations

1. The Plan is a defined contribution 401(k) plan, and has approximately 850 participants; 335 participant accounts contain a share of the REIT Interest. As of December 31, 1995 the fair market value of total assets in the Plan was $3,163,741. RSC is a Delaware corporation engaged in the business of rental services. U.S. Bank of Idaho currently serves as the Plan's trustee and has investment discretion over all the assets held in the Plan.

2. The Plan acquired the Interest in the REIT in October 1989, subsequent to a merger with the C & W Action Rentals, Inc. Profit Sharing Plan. The merger of the two plans occurred after RSC's predecessor, Acme Holdings, Inc. acquired the sponsor of the C & W Plan. The C & W Plan had originally purchased the Interest in the REIT in 1984, in the principal amount of $50,572; the Plan owns a 2.86% Interest in the REIT.

On November 6, 1984, the REIT made a $1,770,020 loan to an independent third party. The loan was secured by a deed of trust on real estate located in Tucson, Arizona (the Tucson Property). The Plan participated in the loan through the REIT. In March of 1989, the Plan was notified that the borrower was in default; subsequently the borrower never repaid the loan [16]. After the default, Citibank (Arizona), formerly known as United Bank of Arizona, as Trustee of the REIT, foreclosed on the Tucson Property securing the loan and took possession of it.

3. RSC, the applicant, represents that the Tucson Property is currently the REIT's sole asset and that because the Interest is a minority interest and it is not publicly traded, there is not an established market for the Interest.

4. The trustee of the Plan has attempted to sell the Plan's Interest in the REIT, but has not been successful. West One Bank, former Plan trustee, made arrangements with Pepper Viner Co., the REIT's successor trustee to Citibank (Arizona), in 1993, for Pepper Viner to circulate a letter from West One Bank, to the REIT's other unit holders to determine if any of them might have an interest in purchasing the Plan's Interest. However, no one responded. Subsequently West One Bank contacted several brokers and as a result, received one offer to purchase the REIT Interest, for a total price of $4,000. West One Bank declined the offer because they felt that the Plan's interest in the underlying property had a value much higher than the $4,000.

RSC, the sponsor, requests an exemption to permit the cash Sale by the Plan of the Interest to RSC. The Plan will receive the greater of: (1) The fair market value of the Interest as determined by an independent appraiser at the time of the Sale, or (2) the Plan's total investment in the Interest of $50,572. The applicant represents that this Sale is in the best interest of Plan participants and beneficiaries because the asset provides no income to the Plan, and is illiquid. The Sale will facilitate full implementation of participant-directed investing of accounts, which was adopted by the Plan in January, 1994. The Sale will allow the Plan to convert the Interest into cash, so that participants whose account balances are partially invested in the Interest may direct the investment of that portion of their accounts into assets generating greater returns.

[16] The Department notes that the decision to acquire and hold the Interest are governed by the fiduciary responsibility requirements of Part 4, Subtitle B, Title I of the Act. In this regard, the Department herein is not proposing relief for any violations of Part 4 which may have arisen as a result of the acquisition and holding of the interest by the Plan.

5. The Interest, the sole value of which is the Plan's undivided 2.86% interest in the Tucson Property, was appraised as of July 19, 1996 by Mr. Thomas A. Baker, MAI, SRA, a State of Arizona Certified General Real Estate Appraiser who is independent of the Plan and RSC. Mr. Baker applied the direct sales comparison approach to determine both the market value and fee simple interest of the total property and of the Plan's 2.86% interest in the subject property.

In addition, the appraiser used comparable sale information of partial interest sales in order to determine the fair market value of the Plan's 2.86% Interest in the REIT. Mr. Baker concluded that the fair market value of the Plan's 2.86% interest in the REIT, as of July 19, 1996 was $10,900.

6. RSC represents that the plan would incur no expenses nor commissions with respect to the Sale. The applicant also represents that the proposed transaction is administratively feasible and protective of the Plan's participants and beneficiaries. Furthermore, the applicant represents that any amounts received by the Plan as a result of the Sale, which are in excess of the fair market value of the Interest, will be treated as contributions to the Plan, but that these contributions will not exceed limitations of section 415 of the Internal Revenue Code.

7. In summary, the applicant represents that the transaction satisfies the statutory criteria of section 408(a) of the Act and section 4975(c)(2) of the Code because: (1) The Sale will be a one-time transaction for cash; (2) no commissions or fees will be paid by the Plan as a result of the Sale; (3) the Sale will facilitate full implementation of participant-directed investing of accounts, which was adopted by the Plan in January, 1994; and (4) the Sale price will be the higher of: (a) The fair market value of the Interest on the date of the Sale, or (b) the Plan's total investment in the Interest, in the amount of $50,572.

FOR FURTHER INFORMATION CONTACT: Ms. Marianne H. Cole of the Department, telephone (202) 219–8881. (This is not a toll-free number).

General Information

The attention of interested persons is directed to the following:

(1) The fact that a transaction is the subject of an exemption under section 408(a) of the Act and/or section 4975(c)(2) of the Code does not relieve a fiduciary or other party in interest of disqualified person from certain other provisions of the Act and/or the Code, including any prohibited transaction provisions to which the exemption does not apply and the general fiduciary responsibility provisions of section 404 of the Act, which among other things require a fiduciary to discharge his duties respecting the plan solely in the interest of the participants and beneficiaries of the plan and in a prudent fashion in accordance with section 404(a)(1)(b) of the act; nor does it affect the requirement of section 401(a) of the Code that the plan must operate for the exclusive benefit of the employees of the employer maintaining the plan and their beneficiaries;

(2) Before an exemption may be granted under section 408(a) of the Act and/or section 4975(c)(2) of the Code, the Department must find that the exemption is administratively feasible, in the interests of the plan and of its participants and beneficiaries and protective of the rights of participants and beneficiaries of the plan;

(3) The proposed exemptions, if granted, will be supplemental to, and not in derogation of, any other provisions of the Act and/or the Code, including statutory or administrative exemptions and transitional rules. Furthermore, the fact that a transaction is subject to an administrative or statutory exemption is not dispositive of whether the transaction is in fact a prohibited transaction; and

(4) The proposed exemptions, if granted, will be subject to the express condition that the material facts and representations contained in each application are true and complete, and that each application accurately describes all material terms of the transaction which is the subject of the exemption.

Signed at Washington, DC, this 30th day of August, 1996.

Ivan Strasfeld,

Director of Exemption Determinations Pension and Welfare Benefits Administration, U.S. Department of Labor.

[FR Doc. 96–22717 Filed 9–5–96; 8:45 am]

BILLING CODE 4510–29–P

[Application No. D–10011]

Notice of Proposed Individual Exemption to Make Permanent as Modified Prohibited Transaction Exemption (PTE) 91–8 Involving Equitable Life Assurance Society of the United States and Its Affiliates (Equitable) and Its Wholly-Owned Subsidiary, Equitable Real Estate Management, Inc. (ERE), Located in New York, New York

AGENCY: Pension and Welfare Benefits Administration, Department of Labor.

ACTION: Notice of proposed individual exemption to make permanent as modified PTE 91–8, which involves Equitable and ERE.

SUMMARY: This document contains a notice of pendency before the Department of Labor of a proposed individual exemption to make permanent as modified the temporary relief provided by PTE 91–8 (56 FR 1411/1419, January 14, 1991). PTE 91–8 is a temporary exemption which expired January 13, 1996. This proposed exemption, if granted, will make permanent as modified PTE 91–8 and will provide relief for the provision of property management and/or leasing services by ERE [1], Equitable's wholly-owned subsidiary to an Account (as defined in Section IV below), provided that the conditions set forth in Section II are met.

EFFECTIVE DATE: The Department has determined to extend the temporary exemptive relief provided under PTE 91–8 effective January 13, 1996, until the date the final grant for this proposed exemption is published in the Federal Register.

Also, if granted, this proposed exemption to make permanent PTE 91–8 will be effective on the date the final grant is published in the Federal Register. However, the modification in the annual reporting requirement whereby Equitable will furnish the annual report to each authorizing plan fiduciary and the Independent Fiduciary no later than 90 days following the end of the period to which the annual report relates, as set forth in Section II(4)(a) in this proposed exemption, will be effective, as of January 13, 1996.

DATES: Written comments and requests for a public hearing must be received by the Department of Labor by no later than October 21, 1996.

ADDRESSES: All written comments and requests for a hearing (at least three copies) should be sent to the Office of Exemption Determinations, Pension and Welfare Benefits Administration, Room N–5649, U.S. Department of Labor, 200 Constitution Avenue NW., Washington, DC 20210, Attention: Application No. D–10011. The application for exemption

[1] In this regard, ERE represents that during the course of PTE 91–8 ERE changed its acronym from EREIM. This was solely a matter of preference and does not reflect a change in ownership or management of ERE. The description of Equitable Real Estate Investment Management, Inc., as set forth in the original notice of proposed exemption published on February 28, 1990 at 55 FR 7057/7069 and in the exemption application for permanent exemption and modification of PTE 91–8, dated April 24, 1995, continues to accurately reflect the ownership and management of ERE.

and the comments received will be available for public inspection in the Public Disclosure Room of Pension and Welfare Benefits Administration, U.S. Department of Labor, Room N–5638, 200 Constitution Avenue NW., Washington DC 20210.

FOR FURTHER INFORMATION CONTACT: Ekaterina A. Uzlyan, Office of Exemption Determinations, U.S. Department of Labor, telephone (202) 219–8883. (This is not a toll-free number.)

SUPPLEMENTARY INFORMATION: Notice is hereby given of the pendency before the Department of a proposed exemption to make permanent as modified PTE 91–8. PTE 91–8 provides an exemption from the restrictions of section 406(a), 406(b)(1) and 406(b)(2) of the Employee Retirement Income Security Act of 1974 (the Act) and from the sanctions resulting from the application of section 4975 of the Internal Revenue Code of 1986 (the Code), by reason of section 4975(c)(1) (A) through (E) of the Code.

The notice of proposed exemption to make permanent PTE 91–8 was requested in an exemption application by Equitable and ERE pursuant to section 408(a) of the Act and section 4975(c)(2) of the Code, and in accordance with the procedures set forth in 29 CFR Part 2570, Subpart B (55 FR 32836, August 10, 1990). Effective December 31, 1978, section 102 of Reorganization Plan No. 4 of 1978 (43 FR 47713, October 17, 1978) transferred the authority of the Secretary of the Treasury to issue exemptions of the type requested to the Secretary of Labor. Accordingly, the proposed exemption to make permanent PTE 91–8 is being issued solely by the Department.

PTE 91–8

PTE 91–8 is a temporary individual exemption which expired on January 13, 1996. A summary of the facts and representations pertaining to PTE 91–8 was contained in a notice of pendency of proposed exemption that was published in the Federal Register on February 28, 1990 at 55 FR 7057/7069. The grant of PTE 91–8 was published in the Federal Register on January 14, 1991 at 56 FR 1411/1419. PTE 91–8 permits the provision of certain real estate property management and, in some instances, leasing services by EREIM, an indirect wholly owned subsidiary of Equitable and the predecessor of ERE, affiliates of EREIM and Tishman Speyer Properties (TSP), a partnership in which Equitable has a 50 percent ownership interest, to various real estate separate accounts (the Accounts) in which employee benefit plans participate. The Accounts are managed by Equitable, EREIM or subsidiaries thereof. PTE 91–8 also permits the provision, by the law department of Equitable (the Law Department), of certain legal services to the Accounts required in connection with individual properties held by the Accounts.

Equitable is a mutual life insurance company organized under the laws of the State of New York. Among the variety of products and services, Equitable offers asset management and other services to numerous employee benefit plans, including investments in the Accounts. The Accounts hold investments in income-producing real estate such as office buildings, hotels, shopping centers and industrial and commercial properties. As the investment manager with respect to the Accounts, Equitable has investment discretion to acquire and dispose of properties on behalf of the Accounts, and the responsibility to manage Account properties. Equitable represented that its direct or indirect subsidiaries may act as the investment manager with respect to existing or new Accounts.

Furthermore, Equitable represented that the provision of property management and leasing services to the Accounts by ERE and certain of its other affiliates is of central importance in maximizing returns available to its investors, including employee benefit plans. In this regard, large real estate investment managers typically manage properties themselves or through property management firms they have acquired. This strategy enables them to use unified leasing strategy and other efficient management strategies, and is a superior alternative to retaining independent managers for property management. Equitable stated that often the best arrangements for the provision of property services to the Accounts, and the highest quality of services can be provided through the use of its in-house personnel or through firms in which Equitable has an interest. Such firms possess special expertise in the type of properties held by the Accounts and knowledge of the Accounts and their properties.

The services provided to the Accounts by ERE and certain other affiliates of Equitable included day to day property management and leasing responsibilities associated with the operation of income-producing properties. Specifically, these responsibilities included: (a) using best efforts to lease the property to desirable tenants and negotiating the terms and renewals of such leases; (b) receiving and collecting rents; (c) arranging for all necessary repairs and replacement and installation of equipment; (d) handling tenant complaints; (e) preparing and submitting to the owner proposed operating and capital budgets; and (f) performing marketing and promotional supervisory services.

To ensure that the transactions in PTE 91–8 operated in the interests of the Accounts and the participating plans therein, the exemption contained certain specified safeguards. These safeguards included: (1) the requirement that the arrangement under which the transactions were performed be subject to the prior authorization of an independent plan fiduciary for each plan invested in an Account; [2] (2) the requirement that not less than 45 days prior to the implementation of either the policy for property management and leasing services or the policy for legal services, Equitable or EREIM, as investment manager, furnish the authorizing plan fiduciary with reasonably available information; (3) a mechanism enabling the plans to terminate their investment in the Account; (4) an annual reporting requirement whereby Equitable furnished the annual report to each authorizing plan fiduciary and the Independent Fiduciary no later than 45 days following the end of the period to which the annual report related; (5) confirmation by the plans of the multiple services arrangement; (6) approval by the Independent Fiduciary of each transaction under the exemption, and a mechanism for the Independent Fiduciary's negotiation and approval of contracts for the provision of services by EREIM, TSP or the Law Department to the Accounts; (7) the requirement that the terms of a service provision arrangement must be reviewed by the Independent Fiduciary prior to implementation; (8) the requirement that Equitable and EREIM had to furnish certain information regarding transactions to the Independent Fiduciary for its periodic review of performance of EREIM, TSP, or the Law Department under the contracts; (9) a plan investor sophistication requirement; (10) percentage limitations on plan investment in the Accounts, including Equitable's in-house plans; (11) the requirement that the terms of the transactions must be as favorable to the Accounts as arm's length terms; and, (12) that the compensation paid to

[2] In this regard, under this proposed exemption to make permanent as modified PTE 91–8, Equitable represents that for plans which have previously authorized their participation in the Accounts under PTE 91–8, no reauthorization will be required.

EREIM, TSP or the Law Department shall not exceed reasonable compensation within the meaning of section 408(b)(2) of the Act and the regulations thereunder. In addition to these conditions, PTE 91–8 and the notice relating to PTE 91–8 contained other protective conditions that had to be met by Equitable and its affiliates with respect to the Accounts and the transactions which were the subject of PTE 91–8. Also, representations contained in Paragraph IV of the notice of proposed exemption relating to PTE 91–8 placed certain limitations on the fees that EREIM or TSP were permitted to receive for property management and leasing services rendered to the Accounts pursuant to PTE 91–8.

Procedure for Requesting Permanent Relief for Transactions in PTE 91–8

This proposed exemption was requested by Equitable and ERE pursuant to Paragraphs IX and X of the notice of proposed exemption relating to PTE 91–8. As mentioned, PTE 91–8 is a temporary exemption which expired on January 13, 1996. Pursuant to Paragraphs IX and X, prior to the expiration of PTE 91–8, Equitable and ERE could apply for a permanent exemption provided that, among other things, the application for a permanent exemption describes whether and how compliance with PTE 91–8 has been achieved. In particular, the application for a permanent exemption should describe:

(a) the number of transactions engaged in under PTE 91–8;

(b) the decisions made by the independent fiduciaries for various services; and

(c) the fees that have been paid to the Law Department, EREIM or TSP for the property services and legal services that have been rendered under PTE 91–8.

Further, pursuant to Paragraphs IX and X of the notice of proposed exemption relating to PTE 91–8, the application for a permanent exemption should include a report from the Independent Fiduciary expressing such fiduciary views and rationales with respect to the extension of PTE 91–8 and whether the Independent Fiduciary believes that cost savings have been achieved for the Accounts. In paragraph X of the notice of proposed exemption relating to PTE 91–8, Equitable identified certain standards which may be applied by the Department in reviewing the fees charged by Equitable to determine whether cost savings have been achieved, and whether making PTE 91–8 permanent would be appropriate. Among other things, Equitable represented in Paragraph X, that property management and leasing fees charged by unaffiliated property management firms generally range from 4 to 5 percent of gross receipts (depending upon such factors as property type, geographic location and project complexity) and average approximately 4.5 percent of gross receipts. Therefore, Equitable proposed in Paragraph X, that the standard of review adopted by the Department in evaluating the operation of property related services, should require Equitable to demonstrate that the aggregate annual property management and leasing fees charged to each Account (including the allocable cost of the services of the independent fiduciary under the exemption) were less than 4.5 percent of the gross receipts earned by the Account during each year that ERE or TSP has provided property management and leasing services pursuant to the exemption.

Cost Savings Report of the Independent Fiduciary

Jackson Cross Company (Jackson Cross), as the independent fiduciary (the Independent Fiduciary) for property management and leasing services under PTE 91–8, prepared a report regarding cost savings achieved by the Accounts (the Report). In the Report, Charles F. Seymor, CRE, MAI, and chairman of Jackson Cross, made the following representations. Mr. Seymor stated that the provision by Compass Management and Leasing and Compass Retail (collectively, Compass), two wholly-owned subsidiaries of ERE [3], of property management and leasing services to the Accounts resulted in substantial savings to the Accounts. Mr. Seymor represented that in negotiating the final terms of the management or management and leasing contracts for each of the Accounts' properties, Jackson Cross reviewed market fee ranges in each market area and also the fees paid to the previous managers. In this regard, Jackson Cross required that a measurable economic benefit be evident before they approved a transaction and also quantified that benefit in their separate initial reports on each approved property. In the annual reports to ERE for the year 1994, Jackson Cross applied management fees and leasing fees [4] to actual 1994 gross collections and to the leases negotiated for the Accounts, and compared the results to what would have been charged if these fees were at the low end of the market range or the contractual fee for the previous managers.[5] In 1994, Jackson Cross visited over 40% of the Accounts' properties. Jackson Cross estimated that in 1994 alone, a savings of $1,650,000 was obtained to the benefit of the Accounts. Furthermore, 95 transactions were completed through December 31, 1994, and on an annual basis, the fees earned by Compass were less than 4.5 percent of the gross receipts earned by the properties in each Account managed by Compass. Accordingly, Jackson Cross concluded that the property management and leasing services rendered by Compass to the Accounts resulted in substantial savings for their benefit. In preparing the annual reports, Jackson Cross also reviewed several additional measures of quality management and leasing services to ensure that the services provided to the Accounts are the best available as compared to the services provided by other first rate property managers in the locality of a property. In this regard, Jackson Cross considered the following criteria: how each property performed against budget; how the value of each property has been affected during the year; whether the management and leasing professionals engaged in continuing education and training during the year, and what professional designations they have achieved; and whether these professionals have adopted an appropriate long-range view as stewards of these properties, with a goal of maximizing the Accounts' investments.

Permanent Exemption for Transactions Under PTE 91–8

Equitable and ERE request that the exemptive relief for transactions which were the subject of PTE 91–8 be made permanent because as explained in the Jackson Cross report above, PTE 91–8 benefitted the employee benefit plans that participate in the Accounts. Furthermore, Equitable and ERE

[3] The applicant represents that these two subsidiaries of ERE, which were formerly separate divisions of ERE are subject to the management and control of ERE, and their status as separate corporate entities rather than divisions of ERE was implemented solely for organizational reasons. ERE may in the future recognize one or both of the Compass entities as divisions within ERE.

[4] It is represented that most management fees and leasing commissions are typically calculated as a percentage of gross receipts during a given year and a percentage of new lease transactions, respectively.

[5] In this regard, Jackson Cross compared fee schedules charged by Compass to the fee schedules charged by previous unaffiliated property managers during the year preceding ERE's performance of such services under the exemption. Furthermore, Jackson Cross as the Independent Fiduciary is obligated to monitor property management fees currently charged by the unaffiliated managers and to assure that the fees charged by Equitable or ERE do not exceed these fees.

propose the following procedures to assure continued cost savings to the Accounts under a permanent exemption (the Cost Saving Procedures). The Cost Saving Procedures will be carried out as follows:

(a) After the fifth anniversary of the grant of this exemption, and after the beginning of each subsequent five-year period, ERE will prepare a survey of property management and leasing fees for the properties that have similar geographic location and property types to those held by the Accounts. The survey will include data regarding the fees that have been charged to the Accounts by several property management firms that are unaffiliated with Equitable or ERE for services that are contemplated by the exemption during the one year period prior to the beginning of the new five-year period. Also, the survey will include data as to the fees paid by Equitable or ERE for such services performed for the properties not held by the Accounts during the same period and other market data regarding the cost of property management and leasing services by geographic location and property types.

(b) The Independent Fiduciary will review ERE's internal survey referred to in (a) above, and will verify the accuracy of the data by independently reviewing a sampling of the properties to which such fees apply. Based upon its review of the survey and its own professional resources and expertise, the Independent Fiduciary will determine a typical range of annual fees for property management and leasing services for the Accounts. The average of the range, as determined from such survey, will serve as the basis of comparison for determining for the next five-year period whether continuation of the property management and leasing services policy (the Property Services Policy) has provided a cost savings to the Accounts.

(c) Equitable and ERE will demonstrate to the Independent Fiduciary at the end of the applicable five-year period that the aggregate property management and leasing fees charged to each Account pursuant to the Property Services Policy plus the cost of the services of the Independent Fiduciary under the exemption that are allocated to the Accounts, are less than the fees that would have been charged using the benchmark rate established at the beginning of the five year period.

(d) The Independent Fiduciary will review the data supplied by ERE and, to the extent considered necessary by the Independent Fiduciary, data collected from the Independent Fiduciary's own surveys, and will document its findings and analysis of such cost savings in a report to be delivered to each of the plans participating in the Accounts within 90 days after the end of the five-year period and each subsequent five-year period and prior to the implementation of the annual confirmation procedure described in paragraph (5) of Section II with respect to such period. In the event the Independent Fiduciary finds that cost savings have not been achieved for the Accounts, it will not approve any additional services arrangements pursuant to the Property Services Policy until Equitable and ERE have demonstrated to the satisfaction of the Independent Fiduciary that policies intended to assure cost savings to the Accounts have been implemented by Equitable and ERE. The survey, the Independent Fiduciary's report reviewing the survey, and the final report of the Independent Fiduciary analyzing whether cost savings had been achieved during the five-year period to which the survey relates, will be maintained by Equitable or ERE in accordance with the recordkeeping requirements of Section III of this exemption.

Accordingly, the Department proposes to modify PTE 91–8 by adopting the language of the Cost Saving Procedures as stated in (a)–(d) above into a new paragraph (12) in Section II of this proposed exemption.

Requested Modifications and Changes in Circumstances to PTE 91–8.

A. Tishman Speyer Properties

Equitable represents that Tishman Speyer Properties (TSP), an affiliate of Equitable at the time PTE 91–8 was issued, is no longer affiliated with Equitable and, thus, requests that this exemption, if granted, be inapplicable to TSP. The Department proposes to modify PTE 91–8 by eliminating any references to TSP in this proposed exemption.

B. Legal Services

Equitable represents that the exemption under PTE 91–8 for the provision of legal services to the Accounts by Equitable in-house Law Department was never implemented. Accordingly, Equitable requests that this exemption eliminate reference to the relief for the provision of such legal services by the Law Department to the Accounts. The Department proposes to modify PTE 91–8 by eliminating relief for the provision of legal services by the Law Department to the Accounts.

C. Modification of Acronym for EREIM

Equitable requests that for purposes of this proposed exemption, if granted, EREIM should be referred to as ERE. Equitable represents that the change in acronym from EREIM to ERE is a matter of preference and does not reflect a change in ownership or management of EREIM. The description of EREIM, as set forth in the original notice of proposed exemption and in this exemption application, continues to accurately reflect the ownership and management of EREIM. Accordingly, the Department proposes to modify PTE 91–8 by substituting the acronym ''ERE'' for the acronym ''EREIM'' in this proposed exemption.

D. Annual Reconfirmation Requirement

Section II(4) of PTE 91–8 provides that the continued retention of the Independent Fiduciary with respect to the property management and leasing services arrangement for an Account is subject to the annual reconfirmation by the holders of a majority of the units of beneficial interests in that Account.[6] An annual report regarding the Account, which is furnished by Equitable and ERE to the authorizing plan fiduciaries and the Independent Fiduciary (the Annual Report), contains a ballot for the annual reconfirmation of the Independent Fiduciary, which is to be returned to Equitable.

Equitable and ERE represent that while the plans that participate in the Accounts support the continued service of the Independent Fiduciary,[7] it is often difficult to implement the Independent Fiduciary reconfirmation requirement. In many cases, these ballots are not returned by the plans for several months and then only after repeated reminders. A plan's failure to respond to the reconfirmation request by returning the ballot in a timely fashion creates uncertainty as to whether the exemption will continue to be available for ERE and its affiliates to continue providing property management and leasing services to the Accounts.

Equitable requests that the procedure for annual client reconfirmation of the Independent Fiduciary be modified to allow Equitable to treat a plan's failure to return the ballot within 30 days after

[6] The Independent Fiduciary may also be removed with or without cause by the vote of the holders of a majority of the units of beneficial interests in an Account voting in favor of such removal.

[7] In this respect, Equitable notes that at least 99 percent of the contractholders that have voted in the context of an annual reconfirmation of the Independent Fiduciary have voted in favor of such reconfirmation.

receipt of a request for reconfirmation as an indication of such plan's vote in favor of continued retention of the Independent Fiduciary. Equitable represents that this procedure will be implemented on an annual basis. Equitable also states that this proposed modification will increase efficiency in ensuring the continued service of a qualified Independent Fiduciary without adversely affecting the oversight conditions of the exemption.

The Department proposes to modify PTE 91–8 by adding the following language to the new Section II(4)(a):

''The Annual Report will also contain a ballot regarding the reconfirmation of the Independent Fiduciary, which is to be returned to Equitable. In this respect, at the time of delivery of each Annual Report, Equitable will specifically indicate to each plan that the Independent Fiduciary may be terminated by a vote in favor of such termination by the holders of a majority of the units of beneficial interests in the Account and will request such plan to confirm the Independent Fiduciary's appointment. Following a plan's receipt of the Annual Report, Equitable may treat a plan's failure to return the ballot within thirty (30) days after receipt of a request for reconfirmation as a vote in favor of continued retention of the Independent Fiduciary.''

In this regard, to ensure that the plans receive notification of the annual client reconfirmation procedure, the Department proposes to add the following language as a new paragraph (b) at the end of the new Section II(4):

''Equitable or ERE receives confirmation that the notice and the ballot sent to the authorizing plan fiduciary regarding the continued retention of the Independent Fiduciary has been received by the authorizing fiduciary and the Independent Fiduciary. The method used to confirm notice to the authorizing fiduciaries and the Independent Fiduciary must be sufficient to ensure that the authorizing fiduciaries and the Independent Fiduciary actually receive the notice. In all cases, return receipt for certified mail, printed confirmation of facsimile transmissions and manifest or computer data entries of independent courier services will be considered acceptable methods of confirming receipt.''

The notice of proposed exemption relating to PTE 91–8 also indicated that Equitable will promptly designate a replacement Independent Fiduciary in the event of the removal or resignation of the Independent Fiduciary, but such appointment is also subject to the affirmative confirmation by the plans participating in the Accounts vis-a-vis a ballot contained in the Annual Report. Equitable represents that the need for such affirmative approval could cause delay in replacing the Independent Fiduciary with a qualified new Independent Fiduciary. The possibility of such delays requires that contingency plans be made for using unaffiliated property management and/or leasing firms (and whose services may not be as advantageous to the Accounts as those that could be provided by an Equitable affiliate). Therefore, Equitable represents that the appointment of the replacement Independent Fiduciary will also be handled in accordance with the procedure described in Section II(4)(a).

E. Annual Reporting Requirement

Section II(4) of PTE 91–8 requires Equitable or ERE to furnish each authorizing plan fiduciary and the Independent Fiduciary with the Annual Report identifying detailed information about the fees incurred and services provided to the Account pursuant to PTE 91–8.[8] The Annual Report is required to be provided not later than 45 days following the end of each reporting period. Equitable furnishes the Annual Report within 45 days after the end of each calendar year.

Equitable represents that providing the Annual Report within the 45 day requirement makes it impossible to include actual year-end data for the Accounts' properties because this data is not generally available to Equitable early enough within that time period to allow for necessary verification, submission to the Independent Fiduciary and compilation and production of the Annual Reports. In addition, Equitable must also substantially complete end-of-year financial statements for the Accounts and other accounts managed by Equitable during this period.

Equitable requests that the Annual Report requirement of PTE 91–8 be modified to allow Equitable to submit the Annual Report no later than 90 days following the end of the period to which the Annual Report relates, and that this modification be effective retroactively, as of January 13, 1996, the date PTE 91–8 had expired.

In this regard, the Department proposes to modify PTE 91–8 by substituting ''90 days'' for ''45 days'' in Section II(4)(a), such that the new Section II(4)(a) should read, in relevant part:

* * * with the Annual Report containing the information described in this paragraph, not less frequently than once a year and not later than 90 days following the end of the period to which the report relates.

This modification will be effective retroactively, as of January 13, 1996.

F. Modification of Investment Limitations of Section II(10)

1. 5 Percent Investment Limitation

Section II(10)(a) of PTE 91–8 limits the percentage of plan assets that can be invested in an Account by any plans covering employees of Equitable to 5 percent of the assets of the investing plan. Equitable believes that the 5 percent limitation unduly restricts the investments in the Accounts by Equitable's in-house plans and limits the investment by the trustees of Equitable's pension plan in real estate separate accounts, such as SA–8,[9] which they believe to be prudent investments that are appropriate for Equitable's plans. Fiduciaries of Equitable's plans should not be forced to look to competitors for real estate investment opportunities.

Therefore, Equitable is requesting that the percentage limitation applicable to in-house plans be modified to permit any plan in which employees of Equitable or an affiliate participate, to invest up to 10 percent of its assets in any Account covered by PTE 91–8. Equitable represents that a 10 percent limitation would give trustees of the in-house plans the flexibility necessary to deal with inadvertent fluctuations in the levels of participation in an Account, and to invest the assets of such Plans in what they determine are successful diversified real estate funds.

Accordingly, the Department proposes to modify PTE 91–8 by substituting ''10 percent'' for ''5 percent'' in Section II(10)(a), such that the new Section II(10)(a) should read, in relevant part:

Not more than 10 percent of the assets of a plan covering employees of Equitable will be invested in an Account. Notwithstanding the foregoing, this percentage requirement will continue to be satisfied by any plan that exceeds the 10 percent limitation of this subsection provided that no portion of any excess results from an increase in the assets transferred by such plan to the Accounts.

[8] Specifically, under Section II(4) of PTE 91–8 the Annual Report must include a description of the properties and the services that have been performed by ERE or its affiliates for an Account and an indication of the fees that were paid for the preceding reporting period and which are anticipated to be paid to ERE or its affiliates in the coming year for services provided by these entities in connection with the properties held by an Account. The Annual Report must also contain a description of the method for terminating the multiple services arrangement and the reconfirmation and/or removal of the Independent Fiduciary by the plans investing in the Account.

[9] Equitable represents that the primary means by which Equitable's in-house plans invest in real estate is through SA–8.

2. 20 Percent Investment Limitation

Section II(10)(c) of PTE 91–8 imposes a limitation on the percentage of total plan assets that can be invested in the Accounts by plans other than those covering Equitable employees.

This limitation has been set at 20 percent of the assets of the investing plan. PTE 91–8 states that this limitation will apply prospectively only and on an ''acquisition'' basis, i.e., the 20 percent limitation is tested only when additional investments in an Account are made by a plan. Equitable believes that it is unclear from the language of PTE 91–8, which uses the plural ''Accounts'' rather than ''Account'' to describe the limitation, whether the 20 percent limitation is intended to be applied on a single Account basis or on the basis of a plan's aggregate investment in all Accounts combined and accordingly, Equitable requests that the Department clarify the scope of this limitation.

The 20 percent limitation test of Section II(10)(c) of PTE 91–8 was intended to apply to Equitable Accounts on an aggregate basis. Accordingly, no modification of Section II(10)(c) is hereby necessary.

G. Modifications to Limitations on Fees

Paragraph IV (Fees for Property Services) of the notice of proposed exemption relating to PTE 91–8 places certain limitations on the fees that EREIM or TSP [10] are permitted to receive for property management and leasing services rendered to the Accounts pursuant to PTE 91–8.

Specifically, Paragraph IV of the notice of proposed exemption relating to PTE 91–8 provides, among other things, that the fee for leases in which outside brokers are involved generally does not exceed one percent (1%) of the lease amount. This fee is applicable to circumstances where ERE as property manager is separately compensated for leasing services where outside brokers are involved. In this regard, Equitable requests that the 1% limitation be modified to 2.75 percent (2.75%) of the lease amount. Equitable and ERE have determined that the 1% limitation is not consistent with the current practice of establishing leasing commissions for transactions involving outside brokers. Equitable and ERE represent that in most leasing markets such ''co-broker'' leasing fees for the project leasing broker are computed at fifty percent (50%) of the normal new or renewal lease commission fee, which is typically somewhere between four (4%) and seven (7%) percent of the total lease payments. Such a fee structure reflects the fact that the effort required of the exclusive project leasing broker is, in most instances, not reduced by the addition of a tenant's leasing broker, but can actually be more demanding. In this regard, Equitable and ERE have obtained an opinion from Jackson Cross, the independent fiduciary for property management and leasing, regarding modification of this fee limitation. Mr. Seymor from Jackson Cross, stated that based on their experience and studies, they found that leasing fees vary with building size and with the competitive situation in individual markets. In most markets, the project leasing broker received 50% of the normal new or releasing commission. The outside broker received the other 50%, but usually an ''override'' sufficient to pay a full market commission. Because the normal full leasing commission is typically in the range of 4% to 7% of the one year lease amount, the project leasing broker usually received 2% to 3.5% of the one year lease amount. In the opinion of Jackson Cross, restricting ERE to a maximum of 1% does not provide adequate compensation to cover the cost of appropriate professional leasing representation. In this regard, Jackson Cross suggests that this ceiling be raised to 2.75%, still subject to the market requirement that the Independent Fiduciary must certify an economic benefit to the Account on a case by case basis.

In this regard, the Department is proposing to modify PTE 91–8 by increasing the fee limitation to ERE for leases involving outside brokers to 2.75% of the lease amount. Additionally, the Department proposes to further modify PTE 91–8 by incorporating this fee limitation and other fee limitations as described in Paragraph IV of the notice of proposed exemption relating to PTE 91–8 into Section II as an additional condition. Accordingly, a new condition (13) is being added to Section II as follows:

''(13)(a) The fees paid to ERE and/or its affiliates for property management services provided in connection with a property held for an Account shall not exceed for any one year period: (1) In the case of property management services which include leasing services, 7 percent of the overall gross receipts of the property; and (2) in the case of property management services which do not include leasing services, 4 percent of the overall gross receipts of the property.

(b) Where a property manager is separately compensated for leasing services: (1) the fee for new leases will not exceed 7 percent of the lease amount; (2) the fee for renewal leases will not exceed 2 percent of the lease amount; and (3) the fee for leases in which outside brokers are involved will not exceed 2.75 percent of the lease amount.''

The Department notes that this proposed exemption, if granted, is subject to the express condition that the summary of facts and representations set forth in the notice of proposed exemption relating to PTE 91–8, as amended by this notice to make permanent PTE 91–8 accurately describe, where relevant, the material terms of the transactions to be consummated pursuant to this exemption.

After considering Equitable and ERE's application, the Department is proposing this exemption to make permanent PTE 91–8 pursuant to section 408(a) of the Act and section 4975 of the Code and in accordance with the procedures set forth in 29 CFR Part 2570, Subpart B (55 FR 32836, 32847, August 10, 1990.)

Notice to Interested Persons

Those persons who may be interested in the pendency of the requested exemption include fiduciaries and participants of plans which have invested or may invest in an Account. Because of the large number of plans which currently invest in the Accounts, the Department has determined that the only practical form of providing notice to interested persons is the distribution by Equitable, of a notice to the fiduciaries of all plans currently invested in any Account. Such notice will contain a copy of the notice of the proposed exemption published in the Federal Register, and a statement advising interested persons of their right to comment and to request a hearing on the proposed exemption. Such distribution will occur within two (2) weeks of the date of publication of the notice of the proposed exemption in the Federal Register. Accordingly, comments and hearing requests on the proposed exemption are due forty four (44) days after the date of publication of this proposed exemption in the Federal Register.

General Information

The attention of interested persons is directed to the following:

(1) The fact that a transaction is the subject of an exemption under section 408(a) of the Act and section 4975(c)(2) of the Code does not relieve a fiduciary

[10] For purposes of this exemption, if granted, fee limitations described in Paragraph IV of the notice of proposed exemption relating to PTE 91–8 will apply to ERE and its affiliates.

or other party in interest or disqualified person from certain other provisions of the Act and the Code, including any prohibited transaction provisions to which the exemption does not apply, and to the extent jurisdiction exists under Title I of the Act, the general fiduciary responsibility provisions of section 404 of the Act, which among other things require a fiduciary to discharge his duties respecting the plan solely in the interest of the participants and beneficiaries of the plan and in a prudent fashion in accordance with section 404(a)(1)(B) of the Act; nor does it affect the requirements of section 401(a) of the Code, e.g., the plan must operate for the exclusive benefit of the employees of the employer maintaining the plan and their beneficiaries;

(2) The proposed exemption, if granted, will not extend to transactions prohibited under section 406(b)(3) of the Act and section 4975(c)(1)(F) of the Code;

(3) Before an exemption may be granted under section 408(a) of the Act and section 4975(c)(2) of the Code, the Department must find that the exemption is administratively feasible, in the interest of the plan and of its participants and beneficiaries and protective of the rights of participants and beneficiaries of the plan;

(4) This proposed exemption, if granted, will be supplemental to, and not in derogation of, any other provisions of the Act and the Code, including statutory or administrative exemptions. Furthermore, the fact that a transaction is subject to an administrative or statutory exemption is not dispositive of whether the transaction is in fact a prohibited transaction; and

(5) This proposed exemption, if granted, is subject to the express condition that the summary of facts and representations set forth in the notice of proposed exemption relating to PTE 91–8, as amended by this notice to make permanent as modified PTE 91–8 accurately describe, where relevant, the material terms of the transactions to be consummated pursuant to this exemption.

Written Comments and Hearing Requests

All interested persons are invited to submit written comments on the pending exemption to the address above, within forty four (44) days after the date of publication of this proposed exemption in the Federal Register. All comments will be made a part of the record. Comments received will be available for public inspection with the application for exemption at the address set forth above.

Proposed Exemption

Based on the facts and representations set forth in the application, the Department is considering granting the requested exemption under the authority of section 408(a) of the Act and section 4975(c)(2) of the Code and in accordance with the procedures set forth in 29 CFR Part 2570, Subpart B (55 FR 32836, August 10, 1990).

Section I—Covered Transactions

The restrictions of section 406(a), 406(b)(1) and (b)(2) of the Act and the sanctions resulting from the application of section 4975 of the Code by reason of section 4975(c)(1) (A) through (E) of the Code shall not apply to the provision of property management and/or leasing services by ERE, Equitable's wholly-owned subsidiary to an Account (as defined in Section IV), provided that the conditions set forth in Section II are met.

Section II—Conditions

(1) The arrangement under which the covered transactions is performed is subject to the prior authorization of an independent plan fiduciary with respect to each plan whose assets are invested in an Account, following disclosure of information in the manner described in paragraph (2) below. For plans which have previously authorized their participation in the Accounts under PTE 91–8, no reauthorization will be required.[11] In the case of a plan whose assets are proposed to be invested in an Account subsequent to implementation of the property management and leasing services (the Property Services Policy), the plan's investment in the Account is subject to the prior written authorization of an independent plan fiduciary following disclosure of the information described in paragraph (2). The requirement that the authorizing fiduciary be independent of Equitable shall not apply in the case of plans maintained by Equitable on behalf of its employees.

(2) In the event Equitable proposes to implement the Property Services Policy for any additional Account, not less than 45 days prior to the implementation of the Property Services Policy, Equitable or ERE, as investment manager, shall furnish the authorizing plan fiduciary with any reasonably available information which Equitable or ERE believes to be necessary to determine whether such approval should be given, as well as such information which is reasonably requested by the authorizing plan fiduciary. Such information will include: a description of the services to be performed by ERE; identification of properties for which services will be required; an estimate of the fees that would be paid to ERE if it is selected to provide such services; an explanation of the potential conflicts of interest involved in selecting ERE; an explanation of the selection process; and a description of the terms upon which a plan may withdraw from an Account.

(3) In the event an authorizing plan fiduciary of any plan whose assets are invested in an Account submits a notice in writing to Equitable or ERE, as investment manager, at least 15 days prior to implementation of the Property Services Policy, objecting to the implementation of the Property Services Policy, the plan on whose behalf the objection was tendered will be given the opportunity to terminate its investment in the Account, without penalty. With the exception of a plan which has invested in a closed-end Account under which the rights of withdrawal from the Account may be limited as provided in the plan's written agreement to invest in the Account, if written objection to the Property Services Policy is submitted to Equitable or ERE any time after 15 days prior to implementation of the Property Services Policy (or after implementation), the plan must be able to withdraw without penalty, within such time as may be necessary to effect such withdrawal in an orderly manner that is equitable to all withdrawing plans and to the non-withdrawing plans. However, Equitable or ERE need not discontinue operating pursuant to the Property Services Policy, once implemented, by reason of a plan electing to withdraw after 15 days prior to the scheduled implementation date of the Property Services Policy. Any plan which has a discretionary asset management arrangement with Equitable may terminate such arrangement and withdraw from an Account at any time.

(4)(a) Equitable or ERE shall furnish the authorizing plan fiduciary and the Independent Fiduciary acting on behalf of the plans participating in the Account with the Annual Report containing the information described in this paragraph, not less frequently than once a year and not later than 90 days following the end

[11] However, during the notification of interested persons period, Equitable will provide to all interested parties, including the plans participating in the Accounts, a copy of the notice of this proposed exemption. Accordingly, the plans will have the opportunity to submit written comments on the pending exemption during the comment period.

of the period to which the report relates. Such Annual Report shall disclose the total of all fees incurred by the Account during the preceding year under contracts with ERE; include a description of the properties and the services that have been performed by ERE for an Account; and delineate the fees that are anticipated to be paid to ERE in the coming year for services provided by these entities in connection with properties held by an Account. The Annual Report will contain a description of a method for the termination of the multiple services arrangement (see Section II(5)), and for the confirmation and/or removal of the Independent Fiduciary by investing plans in the Accounts. The Annual Report will also contain a ballot regarding reconfirmation of the Independent Fiduciary, which is to be returned to Equitable. In this respect, at the time of delivery of each Annual Report, Equitable will specifically indicate to each plan that the Independent Fiduciary may be terminated by a vote in favor of such termination by the holders of a majority of the units of beneficial interests in the Account and will request such plan to confirm the Independent Fiduciary's appointment. Following a plan's receipt of the Annual Report, Equitable may treat a plan's failure to return the ballot within thirty (30) days after receipt of a request for reconfirmation as a vote in favor of continued retention of the Independent Fiduciary.

(b) Equitable or ERE receives confirmation that the notice and the ballot sent to the authorizing plan fiduciary regarding the continued retention of the Independent Fiduciary has been received by the authorizing fiduciary and the Independent Fiduciary. The method used to confirm notice to the authorizing fiduciaries and the Independent Fiduciary must be sufficient to ensure that the authorizing fiduciaries and the Independent Fiduciary actually receive the notice. In all cases, return receipt for certified mail, printed confirmation of facsimile transmissions and manifest or computer data entries of independent courier services will be considered acceptable methods of confirming receipt.

(5) The multiple services arrangement for an Account shall be subject to annual confirmation following receipt of the Annual Report, pursuant to which the arrangement shall be terminated by a vote in favor of such termination by the holders of a majority of the units of beneficial interests in the Account. In the event of a vote to terminate the arrangement, Equitable shall cease submitting to the Independent Fiduciary (as defined in Section IV) any new proposals to engage in covered transactions and Equitable will not renew or extend any covered transactions. Moreover, within 180 days after the vote of the contract holders, Equitable shall cease engaging in any existing covered transactions.

(6) (a) Each transaction shall be reviewed and approved by an Independent Fiduciary. However, prior to proposing a transaction to the Independent Fiduciary, Equitable or ERE shall first determine that such transaction is in the best interests of the Account.

(b) The Independent Fiduciary shall negotiate the contracts for the provision of services by ERE. The Independent Fiduciary shall also consider the cost to the Account of such fiduciary's involvement in connection with its consideration of whether to approve the particular transaction.

(c) The Independent Fiduciary shall review, as applicable, the performance of ERE under each of its contracts with the Accounts at least once each year and shall instruct Equitable and ERE of any action which should be taken by Equitable on behalf of the Accounts with respect to the continuation, termination or other exercise of rights available to the Account under the terms of the contracts. Equitable will carry out such instruction from the Independent Fiduciary to the extent it is legal and permitted by the terms of the service provision arrangement.

(7) (a) The terms of each such arrangement shall be in writing and must be reviewed by the Independent Fiduciary prior to implementation.

(b) If Equitable or ERE hold Account properties and general account properties in the same real estate market during a period when there is leasing competition between those properties, ERE will hire, during such period, a third party leasing agent for Account properties.

(c) In the case of any emergency circumstances, ERE may provide property services to an Account for a period not exceeding 90 days, but no compensation may be paid by an Account for such services without the prior approval of the Independent Fiduciary.

(8) (a) Equitable and ERE shall furnish the Independent Fiduciary with any reasonably available information which Equitable reasonably believes to be necessary or which the Independent Fiduciary shall reasonably request to determine whether such approval of the transactions described above should be given or to accomplish the Independent Fiduciary's periodic reviews of the performance of ERE under the contracts.

(b) With respect to ERE, such information will include: a description of the Property Services Policy for the Account and the plan clients investing therein; a description of the real estate services which are required; the qualifications of ERE to do the job; a statement, supported by appropriate factual representations, of the reasons for Equitable's belief that ERE is qualified to provide the services; a copy of the proposed arrangement for services and the terms on which ERE would provide the services; the reasons why Equitable believes the retention of ERE would be in the best interests of the Account; information demonstrating why the fees and other terms of the arrangement are reasonable and comparable to fees customarily charged by similar firms for similar services in comparable locales; the identities of non-affiliated service providers and the terms under which these service providers might perform the services; and in any case that it is determined that the property manager will also provide leasing services, Equitable will disclose whether any affiliated property manager under consideration by the Independent Fiduciary is a property manager to any properties that are in competition for tenants with the property for which ERE is under consideration.

(9) Seventy-five percent or more of the units of beneficial interests in an Account must be held by plans or other investors having total assets of at least $50 million. In addition, 50 percent or more of the plans investing in an Account must have assets of at least $50 million. For purposes of the 50 percent test above, a group of plans will be counted as a single plan if either the decision to invest in the Account (or the decision to make investments in the Account available as an option for an individually directed account) is made by a fiduciary other than Equitable who exercises such discretion with respect to plan assets in excess of $50 million.

(10) (a) Not more than 10 percent of the assets of a plan covering employees of Equitable will be invested in an Account. Notwithstanding the foregoing, this percentage requirement will continue to be satisfied by any plan that exceeds the 10 percent limitation of this subsection provided that no portion of any excess results from an increase in the assets transferred by such plan to the Accounts.

(b) Not more than 10 percent of the assets of an Account will be represented by the plans covering employees of Equitable.

(c) For other plans, not more than 20 percent of the assets of each such plan can be invested in the Accounts. Notwithstanding the foregoing, this percentage requirement will continue to be satisfied by any plan that exceeds the 20 percent limitation of this subsection provided that no portion of any excess results from an increase in the assets transferred by such plan to the Accounts. Moreover, this 20 percent limitation shall not apply to any plan which, as of February 28, 1990, the date of the proposed exemption relating to PTE 91–8, had more than 20 percent of its assets invested in the Accounts provided that the plan makes no additional contribution to such Accounts subsequent to that date.

(11) At the time the transactions are entered into, the terms of the transactions must be at least as favorable to the Accounts as the terms generally available in arm's length transactions between unrelated parties. In addition, the compensation paid to ERE for services under its contracts with any Account must not exceed payments in an arm's length transaction between unrelated parties for comparable properties in similar locales, and shall not be in excess of reasonable compensation within the meaning of section 408(b)(2) of the Act and regulation 29 CFR 2550.408b–2.

(12) (a) After the fifth anniversary of the grant of this exemption, and after the beginning of each subsequent five-year period, ERE will prepare a survey of property management and leasing fees for the properties that have similar geographic location and property types to those held by the Accounts. The survey will include data regarding the fees that have been charged to the Accounts by several property management firms that are unaffiliated with Equitable or ERE for services that are contemplated by the exemption during the one year period prior to the beginning of the new five-year period. Also, the survey will include data as to the fees paid by Equitable or ERE for such services performed for the properties not held by the Accounts during the same period and other market data regarding the cost of property management and leasing services by geographic location and property types.

(b) The Independent Fiduciary will review ERE's internal survey referred to in (a) above, and will verify the accuracy of the data by independently reviewing a sampling of the properties to which such fees apply. Based upon its review of the survey and its own professional resources and expertise, the Independent Fiduciary will determine a typical range of annual fees for property management and leasing services for the Accounts. The average of the range, as determined from such survey, will serve as the basis of comparison for determining for the next five-year period whether continuation of the property management and leasing services policy (the Property Services Policy) has provided cost savings to the Accounts.

(c) Equitable and ERE will demonstrate to the Independent Fiduciary at the end of the applicable five-year period that the aggregate property management and leasing fees charged to each Account pursuant to the Property Services Policy plus the cost of the services of the Independent Fiduciary under the exemption that are allocated to the Accounts, are less than the fees that would have been charged using the benchmark rate established at the beginning of the five year period.

(d) The Independent Fiduciary will review the data supplied by ERE and, to the extent considered necessary by the Independent Fiduciary, data collected from the Independent Fiduciary's own surveys, and will document its findings and analysis of such cost savings in a report to be delivered to each of the plans participating in the Accounts within 90 days after the end of the five year period and each subsequent five-year period and prior to the implementation of the annual confirmation procedure described in paragraph (5) of Section II with respect to such period. In the event the Independent Fiduciary finds that cost savings have not been achieved for the Accounts, it will not approve any additional services arrangements pursuant to the Property Services Policy until Equitable and ERE have demonstrated to the satisfaction of the Independent Fiduciary that policies intended to assure cost savings to the Accounts have been implemented by Equitable and ERE. The survey, the Independent Fiduciary's report reviewing the survey, and the final report of the Independent Fiduciary analyzing whether cost savings had been achieved during the five year period to which the survey relates, will be maintained by Equitable or ERE in accordance with the recordkeeping requirements of Section III.

(13) (a) The fees paid to ERE and/or its affiliates for property management services provided in connection with a property held for an Account shall not exceed for any one year period: (1) In the case of property management services which include leasing services, 7 percent of the overall gross receipts of the property; and (2) in the case of property management services which do not include leasing services, 4 percent of the overall gross receipts of the property.

(b) Where a property manager is separately compensated for leasing services; (1) the fee for new leases will not exceed 7 percent of the lease amount; (2) the fee for renewal leases will not exceed 2 percent of the lease amount; and (3) the fee for leases in which outside brokers are involved will not exceed 2.75 percent of the lease amount.

Section III—Recordkeeping

(1) Equitable or ERE will maintain for a period of six years from the date of the transaction, the records necessary to enable the persons described in paragraph (2) of this section to determine whether the conditions of this exemption have been met. Included in these records maintained by Equitable or ERE will be written records of the Independent Fiduciary which had been periodically furnished by the Independent Fiduciary to ERE or Equitable and the records described in paragraph (12) of Section II. Such records are described in Parts III and VI of the summary of facts and representations of the notice of proposed exemption relating to PTE 91–8 and in paragraph (12) of Section II. However, a prohibited transaction will not be considered to have occurred if, due to circumstances beyond Equitable's or ERE's control, the records are lost or destroyed or the records of the Independent Fiduciary are not maintained or produced prior to the end of the six-year period.

(2) (a) Except as provided in subsection (b) of this paragraph and notwithstanding any provisions of subsections (a)(2) and (b) of section 504 of the Act, the records referred to in paragraph (1) of this section are unconditionally available at their customary location for examination during normal business hours by:

(1) Any duly authorized employee or representative of the Department and the Internal Revenue Service;

(2) Any fiduciary of a plan who has authority to acquire or dispose of the interests of the plan in the Accounts or any duly authorized employee or representative of such fiduciary;

(3) Any contributing employer to any plan that has an interest in the Accounts or any duly authorized employee or representative of such employer;

(4) Any participant or beneficiary of any plan participating in the Accounts, or any duly authorized employee or representative of such participant or beneficiary; and

(5) The Independent Fiduciary.

(b) None of the persons described in subparagraphs (2)–(5) of this paragraph shall be authorized to examine trade secrets of Equitable, ERE or commercial or financial information which is privileged or confidential.

Section IV—Definitions

(1) The Accounts—The Accounts are Equitable's Separate Account No. 8, Separate Account No. 16–I, Separate Account No. 16–II, Separate Account No. 16–III, Separate Account No. 16–IV, Separate Account No. 16–VII, Separate Accounts Nos. 136, 141, 149 and 174 for the IBM Retirement Plan, Investment Management Account No. 230 for the Westinghouse Electric Corporation Pension Plan; and such other pooled or single-customer accounts, joint ventures, general or limited partnerships or other real estate investment vehicles that may be established by Equitable for the investment of employee benefit plan assets in real estate related investments to the extent disposition of its assets is subject to the discretionary authority of Equitable.

(2) Equitable—For purposes of this exemption, the term Equitable includes Equitable and/or affiliates of Equitable as defined in paragraph (4) of this section which act as investment managers with respect to an Account.

(3) ERE—For purposes of this exemption, the term ERE includes ERE and/or affiliates of ERE as defined in paragraph (4) of this section, which provides services to an Account pursuant to this exemption.

(4) An affiliate of a person means any person directly or indirectly, through one or more intermediaries, controlling, controlled by, or under common control with the person.

(5) The term ''control'' means the power to exercise a controlling influence over the management or policies of a person other than an individual.

(6) Independent Fiduciary—A person who:

(a) is not an affiliate [as defined in Section IV(4)] of Equitable or ERE;

(b) is not an officer, director, employee of, or partner in, Equitable or ERE [or affiliates thereof as defined in Section IV(4)];

(c) is not a corporation or partnership in which Equitable or ERE has an ownership interest or is a partner;

(d) does not have an ownership interest in Equitable or ERE, or its affiliates;

(e) is not a fiduciary with respect to any plan participating in an Account; and

(f) has acknowledged in writing acceptance of fiduciary obligations and has agreed not to participate in any decision with respect to any transaction in which the Independent Fiduciary has an interest that might affect its best judgment as a fiduciary.

For purposes of this definition of Independent Fiduciary, no organization or individual may serve as an Independent Fiduciary for any fiscal year if the gross income received by such organization or individual (or partnership or corporation of which such organization or individual is an officer, director, or 10 percent or more partner or shareholder) from Equitable or ERE, or their affiliates, (including amounts received for services as Independent Fiduciary under any prohibited transaction exemption granted by the Department) for that fiscal year exceeds 5 percent of its or his annual gross income from all sources for such fiscal year.

In addition, no organization or individual who is an Independent Fiduciary, and no partnership or corporation of which such organization or individual is an officer, director or 10 percent or more partner or shareholder, may acquire any property from, sell any property to or borrow any funds from Equitable or ERE, their affiliates, or any Account maintained by Equitable or ERE, their affiliates, during the period that such organization or individual serves as an Independent Fiduciary and continuing for a period of 6 months after such organization or individual ceases to be an Independent Fiduciary or negotiates any such transaction during the period that such organization or individual serves as Independent Fiduciary.

This proposed exemption, if granted, is subject to the express condition that the summary of facts and representations set forth in the notice of proposed exemption relating to PTE 91–8, as amended by this notice to make permanent as modified PTE 91–8 accurately describe, where relevant, the material terms of the transactions to be consummated pursuant to this exemption.

Signed at Washington, D.C., this 30th day of August 1996.

Ivan Strasfeld,

Director of the Office of Exemption Determinations, Pension and Welfare Benefits Administration, U.S. Department of Labor.

[FR Doc. 96–22716 Filed 9–5–96; 8:45 am]

BILLING CODE 4510–29–P

NUCLEAR REGULATORY COMMISSION

Docket No. STN 50–456

Commonwealth Edison Company; Notice of Consideration of Issuance of Amendment to Facility Operating License and Opportunity for a Hearing

The U.S. Nuclear Regulatory Commission (the Commission) is considering issuance of an amendment to Facility Operating License No. NPF–72, issued to Commonwealth Edison Company (ComEd, the licensee), for operation of the Braidwood Station, Unit 1, located in Will County, Illinois.

The proposed amendment would revise Technical Specification 3/4.4.5 to allow continued operation of Unit 1 for the remainder of Cycle 6, provided that the projected distributions of indications found in the top of the steam generators' roll transitions resulting from the reanalysis of previous non-destructive testing data results in a probability of burst less than $1\times10-2$ and predicted leakage less than the site allowable leak limit.

Before issuance of the proposed license amendment, the Commission will have made findings required by the Atomic Energy Act of 1954, as amended (the Act) and the Commission's regulations.

By October 7, 1996, the licensee may file a request for a hearing with respect to issuance of the amendment to the subject facility operating license and any person whose interest may be affected by this proceeding and who wishes to participate as a party in the proceeding must file a written request for a hearing and a petition for leave to intervene. Requests for a hearing and a petition for leave to intervene shall be filed in accordance with the Commission's ''Rules of Practice for Domestic Licensing Proceedings'' in 10 CFR Part 2. Interested persons should consult a current copy of 10 CFR 2.714 which is available at the Commission's Public Document Room, the Gelman Building, 2120 L Street, NW., Washington, DC, and at the local public document room located at the Wilmington Public library, 201 S. Kankakee Street, Wilmington, Illinois 60481. If a request for a hearing or petition for leave to intervene is filed by the above date, the Commission or an Atomic Safety and Licensing Board, designated by the Commission or by the Chairman of the Atomic Safety and Licensing Board Panel, will rule on the request and/or petition; and the Secretary or the designated Atomic Safety and Licensing Board will issue a

notice of hearing or an appropriate order.

As required by 10 CFR 2.714, a petition for leave to intervene shall set forth with particularity the interest of the petitioner in the proceeding, and how that interest may be affected by the results of the proceeding. The petition should specifically explain the reasons why intervention should be permitted with particular reference to the following factors: (1) The nature of the petitioner's right under the Act to be made a party to the proceeding; (2) the nature and extent of the petitioner's property, financial, or other interest in the proceeding; and (3) the possible effect of any order which may be entered in the proceeding on the petitioner's interest. The petition should also identify the specific aspect(s) of the subject matter of the proceeding as to which petitioner wishes to intervene. Any person who has filed a petition for leave to intervene or who has been admitted as a party may amend the petition without requesting leave of the Board up to 15 days prior to the first prehearing conference scheduled in the proceeding, but such an amended petition must satisfy the specificity requirements described above.

Not later than 15 days prior to the first prehearing conference scheduled in the proceeding, a petitioner shall file a supplement to the petition to intervene which must include a list of the contentions which are sought to be litigated in the matter. Each contention must consist of a specific statement of the issue of law or fact to be raised or controverted. In addition, the petitioner shall provide a brief explanation of the bases of the contention and a concise statement of the alleged facts or expert opinion which support the contention and on which the petitioner intends to rely in proving the contention at the hearing. The petitioner must also provide references to those specific sources and documents of which the petitioner is aware and on which the petitioner intends to rely to establish those facts or expert opinion. Petitioner must provide sufficient information to show that a genuine dispute exists with the applicant on a material issue of law or fact. Contentions shall be limited to matters within the scope of the amendment under consideration. The contention must be one which, if proven, would entitle the petitioner to relief. A petitioner who fails to file such a supplement which satisfies these requirements with respect to at least one contention will not be permitted to participate as a party.

Those permitted to intervene become parties to the proceeding, subject to any limitations in the order granting leave to intervene, and have the opportunity to participate fully in the conduct of the hearing, including the opportunity to present evidence and cross-examine witnesses.

A request for a hearing or a petition for leave to intervene must be filed with the Secretary of the Commission, U.S. Nuclear Regulatory Commission, Washington, DC 20555–0001, Attention: Docketing and Services Branch, or may be delivered to the Commission's Public Document Room, the Gelman Building, 2120 L Street, NW., Washington, DC, by the above date. Where petitions are filed during the last 10 days of the notice period, it is requested that the petitioner promptly so inform the Commission by a toll-free telephone call to Western Union at 1–(800) 248–5100 (in Missouri 1-(800) 342–6700). The Western Union operator should be given Datagram Identification Number N1023 and the following message addressed to Robert A. Capra: petitioner's name and telephone number; date petition was mailed; plant name; and publication date and page number of this Federal Register notice. A copy of the petition should also be sent to the Office of the General Counsel, U.S. Nuclear Regulatory Commission, Washington, DC 20555–0001, and to Michael I. Miller, Esquire; Sidley and Austin, One First National Plaza, Chicago, Illinois 60603, attorney for the licensee.

Nontimely filings of petitions for leave to intervene, amended petitions, supplemental petitions and/or requests for hearing will not be entertained absent a determination by the Commission, the presiding officer or the presiding Atomic Safety and Licensing Board that the petition and/or request should be granted based upon a balancing of the factors specified in 10 CFR 2.714(a)(1) (i)–(v) and 2.714(d).

If a request for a hearing is received, the Commission's staff may issue the amendment after it completes its technical review and prior to the completion of any required hearing if it publishes a further notice for public comment of its proposed finding of no significant hazards consideration in accordance with 10 CFR 50.91 and 50.92.

For further details with respect to this action, see the application for amendment dated August 30, 1996, which is available for public inspection at the Commission's Public Document Room, the Gelman Building, 2120 L Street, NW., Washington, DC, and at the local public document room located at the Wilmington Public library, 201 S. Kankakee Street, Wilmington, Illinois 60481.

Dated at Rockville, Maryland, this 4th day of September, 1996.

For the Nuclear Regulatory Commission.

Robert A. Capra,

Director, Project Directorate III–2, Division of Reactor Projects—III/IV, Office of Nuclear Reactor Regulation.

[FR Doc. 96–22947 Filed 9–5–96; 8:45 am]

BILLING CODE 7590–01–P

PEACE CORPS

Proposed Information Collection Requests

AGENCY: Peace Corps.

ACTION: Notice of public use form review request to the Office of Management and Budget.

SUMMARY: The Associate Director for Management invites comments on information collection requests as required pursuant to the Paperwork Reduction Act (44 U.S.C. chapter 35). This notice announces that the Peace Corps invites the general public and other federal agencies to take this opportunity to comment on the continued information collection below. A copy of the information collection may be obtained from Susan Gambino, Office of Medical Services, United States Peace Corps, 1990 K Street, NW, Washington, DC 20526. Ms. Gambino may be contacted by telephone at (202) 606–3481. Comments on these forms should be addressed to Victoria Becker Wassmer, Desk Officer, Office of Management and Budget, NEOB, Washington, DC 20503.

Information Collection Abstract

Title: Medical History and Examination Forms.

Need For and Use of This Information: This collection of information is necessary to comply with the Peace Corps Act (Section 5(e)) which states that ''applicants for enrollment shall receive such health examinations preparatory to their service * * * as the President may deem necessary or appropriate * * * to provide the information needed for clearance, and to serve as a reference for any future Volunteer medical clearance, and to serve as a reference for any future Volunteer disability claim.'' Peace Corps uses this information to determine the physical and mental suitability for service as a Peace Corps Volunteer.

Respondents: Peace Corps Applicants.

Respondents Obligation to Reply: Mandatory.

Burden on the Public:

Medical History Form (PC 1789)

a. Annual reporting burden: 1,625 hrs.

b. Annual recordkeeping burden: 0 hrs.
c. Estimated average burden per response: 15 minutes.
d. Frequency of response: One time.
e. Estimated number of likely respondents: 6,500.
f. Estimated cost to respondents: $3.04 per.

Medical History Form (PC 1789)
a. Annual reporting burden: 3,000 hrs.
b. Annual recordkeeping burden: 0 hrs.
c. Estimated average burden per response: 30 minutes.
d. Frequency of response: One time.
e. Estimated number of likely respondents: 6,000.
f. Estimated cost to respondents: $6.08 per.

- Responses will be returned by postage-paid reply mail.

This notice is issued in Washington, DC on August 30, 1996.

Ron Conner,

Acting Associate Director for Management.

[FR Doc. 96–22620 Filed 9–5–96; 8:45 am]

BILLING CODE 6051–01–M

Information Collection Requests Under OMB Review

AGENCY: Peace Corps.

ACTION: Notice of public use form review request to the Office of Management and Budget.

SUMMARY: The Associate Director for Management invites comments on information collection requests as required pursuant to the Paperwork Reduction Act (44 U.S.C. chapter 35). This notice announces that the Peace Corps has submitted to the Office of Management and Budget a request to approve the continued use of the Returned Volunteer and Former Staff Database Card. A copy of the information collection may be obtained from Meredith McClanahan, Office of Domestic Programs, United States Peace Corps, 1990 K Street, NW., Washington, DC 20526. Ms. McClanahan may be contacted by telephone at (202) 606–9373. Comments on these forms should be addressed to Victoria Becker Wassmer, Desk Officer, Office of Management and Budget, NEOB, Washington, DC 20503.

Information Collection Abstract

Title: RPCV and Former Staff Database Card.

Need For and Use of This Information: Peace Corps needs this information in order to help the agency regain and maintain contact with former Volunteers and Staff.

Respondents: Returned Peace Corps Volunteers and former staff.

Respondents Obligation to Reply: Voluntary.

Burden on the Public:
a. Annual reporting burden: 3630 hours.
b. Annual recordkeeping burden: 0 hours.
c. Estimated average burden per response: 3 minutes.
d. Frequency of response: Twice a year.
e. Estimated number of likely respondents: 110,000.
f. Estimated cost to respondent: $0.60.

This notice is issued in Washington, DC on August 30, 1996.

Ron Conner,

Acting Associate Director for Management.

[FR Doc. 96–22619 Filed 9–5–96; 8:45 am]

BILLING CODE 6051–01–M

Information Collection Requests Under OMB Review

ACTION: Notice of public use form review request to the Office of Management and Budget.

SUMMARY: Pursuant to the Paperwork Reduction Act of 1981 (44 U.S.C., Chapter 35), the Peace Corps has submitted to the Office of Management and Budget a request to approve the continued use of Classroom Speaker Form to be used by the World Wise Schools program. A copy of the information collection may be obtained form Meredith McClanahan, Office of World Wise Schools, Peace Corps, 1990 K St. NW., Washington DC 20525. Ms. McClanahan may be called at (202) 606–9373. Comments on this form should be addressed to Victoria Becker Wassmer, Desk Officer, Officer of Management and Budget, NEOB, Washington, DC 20503.

Information Collection Abstract

Title: Classroom Speaker Form.

Need for and use of the Information: This form is completed voluntarily by educators throughout the country. Once returned the form will provide information regarding the specific request of the educator. From this, speakers or information resources will be provided from a willing pool of former Peace Corps Volunteers. The effort to involve the returned Peace Corps Volunteer is an effort to fulfill the third goal of Peace Corps as required by Congressional legislation and to enhance the Office of World Wise Schools global education program. Participation in the World Wise School program is voluntary.

Respondents: All parties who are interested being assisted by former Peach Corps Volunteers. These include educators and librarians throughout the public and private school systems.

Respondents obligation to reply: Voluntary.

Burden on the Public:
a. Annual reporting burden: 1,667 hrs.
b. Annual record keeping burden: 520 hrs.
c. Estimated average burden per response: 20 min.
d. Frequency of response: One time.
e. Estimated number of likely respondents: 5,000.
f. Estimated cost to respondents: $4.57.

This notice is issued in Washington, DC on August 30, 1996.

Ron Conner,

Acting, Associate Director for Management.

[FR Doc. 96–22621 Filed 9–5–96; 8:45 am]

BILLING CODE 6051–01–M

PRESIDENTIAL ADVISORY COMMITTEE ON GULF WAR VETERANS' ILLNESSES

Meeting

AGENCY: Presidential Advisory Committee on Gulf War Veterans' Illnesses.

ACTION: Notice of open meeting.

SUMMARY: Under the provisions of the Federal Advisory Committee Act, this notice is hereby given to announce an open meeting concerning the Presidential Advisory Committee on Gulf War Veterans' Illnesses.

DATES: October 9, 1995, 9:00 a.m.–4:30 p.m.

PLACE: Sheraton Inn Tampa and Conference Center, 7401 East Hillsborough Avenue, Tampa, FL 33610.

SUPPLEMENTARY INFORMATION: The President established the Presidential Advisory Committee on Gulf War Veterans' Illnesses by Executive Order 12961, May 26, 1995. The purpose of this committee is to review and provide recommendations on the full range of government activities associated with Gulf War veterans' illnesses. The committee reports to the President through the Secretary of Defense, the Secretary of Health and Human Services, and the Secretary of Veterans Affairs. The committee members have expertise relevant to the functions of the committee and are appointed by the President from non-Federal sectors.

Tentative Agenda

Wednesday, October 9, 1996

9:00 a.m. Call to order and opening remarks

9:05 a.m. Public comment

10:45 a.m. Break

11:05 a.m. Staff briefings and Committee discussion on charter and Final Report

12:15 p.m. Lunch

1:30 p.m. Staff briefings and Committee discussion on charter and Final Report (cont.)

3:00 p.m. Break

3:15 p.m. Staff briefings and Committee discussion on charter and Final Report (cont.)

4:15 p.m. Committee and staff discussion: Next steps

4:30 p.m. Meeting adjourned

A final agenda will be available at the meeting.

Public Participation

The meeting is open to the public. Members of the public who wish to make oral statements should contact the Advisory Committee at the address or telephone number listed below at least five business days prior to the meeting. Reasonable provisions will be made to include on the agenda presentations from individuals who have not yet had an opportunity to address the Advisory Committee. Priority will be given to Gulf War veterans and their families. The Advisory Committee Chair is empowered to conduct the meeting in a fashion that will facilitate the orderly conduct of business. People who wish to file written statements with the Advisory Committee may do so at any time.

FOR FURTHER INFORMATION CONTACT:

Michael E. Kowalok, Presidential Advisory Committee on Gulf War Veterans' Illnesses, 1411 K Street, N.W., suite 1000, Washington, DC 20005, Telephone: (202) 761–0066, Fax: (202) 761–0310.

Dated: September 3, 1996.

C.A. Bock,

Federal Register Liaison Officer, Presidential Advisory Committee on Gulf War Veterans' Illnesses.

[FR Doc. 96–22806 Filed 9–5–96; 8:45 am]

BILLING CODE 3610–76–M

SECURITIES AND EXCHANGE COMMISSION

[Rel. No. IC–22190; File No. 812–10178]

The Lincoln National Life Insurance Company, et al.

August 29, 1996.

AGENCY: U.S. Securities and Exchange Commission (''SEC'' or ''Commission'').

ACTION: Notice of application for exemption under the Investment Company Act of 1940 (the ''1940 Act'').

APPLICANTS: The Lincoln National Life Insurance Company (''Lincoln Life''), Lincoln National Variable Annuity Account L (''Account L''), Lincoln Life & Annuity Company of New York (''Lincoln Life of NY''), Lincoln Life & Annuity Variable Annuity Account L (''Account L–NY''), and LNC Equity Sales Corporation.

RELEVANT ACT SECTIONS: Order requested pursuant to Section 6(c) of the 1940 Act from Sections 26(a)(2)(C) and 27(c)(2) of the 1940 Act.

SUMMARY OF APPLICATION: Applicants request an order pursuant to Section 6(c) of the Investment Company Act of 1940 (1940 Act) granting exemptions from Sections 26(a)(2)(C) and 27(c)(2) of the 1940 Act to permit the deduction of a mortality and expense risk charge of 1.20% from: the assets of Account L or Account L–NY (collectively, the ''Accounts'') in connection with the offer and sale of certain group variable annuity contracts (''Contracts'') and any contracts (''Future Contracts'') issued in the future by Lincoln Life or Lincoln Life of NY that are materially similar to the Contracts; the assets of other separate accounts ''Future Accounts'') established in the future by Lincoln Life or Lincoln Life of NY to fund Contracts and Future Contracts. Exemptive relief also is requested to the extend necessary to permit the offer and sale of Contracts and Future Contracts for which certain broker-dealers other than LNC Equity Sales Corporation serve as distributors and/or principal underwriters.

FILING DATE: The application was filed on June 3, 1996, and amended and restated on August 28, 1996.

HEARING OR NOTIFICATION OF HEARING: An order granting the application will be issued unless the SEC orders a hearing. Interested persons may request a hearing by writing to the Secretary of the SEC and serving Applicants with a copy of the request, personally or by mail. Hearing requests should be received by the SEC by 5:30 p.m. on September 23, 1996, and should be accompanied by proof of service on Applicants in the form of an affidavit or, for lawyers, a certificate of service. Hearing requests should state the nature of the writer's interest, the reason for the request, and the issues contested. Persons who wish to be notified of a hearing may request notification by writing to the Secretary of the SEC.

ADDRESSES: SEC, Secretary, 450 Fifth Street, N.W., Washington, D.C. 20549. Applicants, John L. Steinkamp, Esq., Vice President & Associate General Counsel, The Lincoln National Life Insurance Company, 1300 South Clinton Street, P.O. Box 1110, Fort Wayne, Indiana 46801.

FOR FURTHER INFORMATION CONTACT: Edward P. Macdonald, Staff Attorney, or Patrice M. Pitts, Special Counsel, Office of Insurance Products, Division of Investment Management, at (202 942–0670.

SUPPLEMENTARY INFORMATION: The following is a summary of the application. The complete application may be obtained for a fee from the Public Reference Branch of the SEC.

Applicants' Representations

1. Lincoln Life, a stock life insurance company incorporated under the laws of the State of Indiana in 1905, is principally engaged in the sale of life insurance and annuity policies. Lincoln Life is wholly-owned by Lincoln National Corporation, a publicly-held insurance and financial services holding company.

2. Account L was established by Lincoln Life as a separate account under the laws of the State of Indiana in 1996, pursuant to a continuing resolution of Lincoln Life's board of directors.

3. Lincoln Life of NY, a stock life insurance company incorporated under the laws of the State of New York, in 1996, is principally engaged in the sale of life insurance and annuity policies in the state of New York. Lincoln Life of NY is a wholly-owned subsidiary of Lincoln Life.

4. Account L–NY was established as a separate investment account under the laws of the State of New York on July 24, 1996, pursuant to a resolution of the board of directors of Lincoln Life of NY.

5. Lincoln Life and Lincoln Life of NY (collectively, the ''Companies'') each will offer three group variable annuity contracts—Group Variable Annuity I, Group Variable Annuity II, and Group Variable Annuity III. The Contracts issued by Lincoln Life of NY are identical in all relevant respects to the Contracts issued by Lincoln Life, but for the identity of the insurance company issuing the Contracts and the separate account supporting the Contracts and any differences relating to state law

requirements. The contracts may be purchased with an initial contribution in connection with retirement plans that qualify for favorable federal income tax treatment as well as in connection with retirement plans that do not qualify for such treatment.

6. Each of the Accounts consists of subaccounts (''Subaccounts''). Each Subaccount invests net contributions received under the Contracts in shares of one or more of the investment portfolios of the Dreyfus Stock Index Fund, the Dreyfus Variable Insurance Products Fund, the Fidelity Variable Insurance Products Fund, the Fidelity Variable Insurance Products Fund II, the Twentieth Century TCI Portfolios, Inc., the T. Rowe Price International Series, Inc., the Acacia Capital Corporation, and such other registered investment companies as the Companies may make available under their Contracts from time to time (each, a ''Fund''), or any combination thereof. Each Fund is an open-end management investment company and, except for the Dreyfus Stock Index Fund, has a number of classes or series, in accordance with Rule 18f–2 under the 1940 Act.

7. The Contracts also permit premium payments to be deposited in a guaranteed interest division which is part of the general account of Lincoln Life or Lincoln Life of NY, and in one or more Subaccounts. During the accumulation period, each Company permits transfers of all or part of a Contract participant's account balance from the guaranteed interest division to a Subaccount, from any one Subaccount to another, or from any Subaccount to the guaranteed interest division.

8. LNC Equity Sales Corporation serves as the distributor and principal underwriter of the Contracts and also may serve as the distributor and principal underwriter of Future Contracts. LNC Equity Sales Corporation is registered under the Securities Exchange Act of 1934 as a broker-dealer and is a member of the National Association of Securities Dealers, Inc. LNC Equity Sales Corporation is an indirect wholly-owned subsidiary of Lincoln National Corporation.

9. Broker-dealers other than LNC Equity Sales also may serve as distributors and principal underwriters of the Contracts and Future Contracts. Any such other broker-dealer (''Future Broker-Dealer'') will be registered under the Securities Exchange Act of 1934 as a broker-dealer and will be a member of the National Association of Securities Dealers, Inc.

10. Each Company deducts $25 (or the balance of a Contract participant's account, if less) per year from each Contract participant's account balance on the last business day of the month in which a participation anniversary occurs. The annual administration charge is deducted only during the accumulation period. Under prescribed circumstances, each Company may waive or reduce the annual administration charge under a Contract. In addition, a Contractowner may pay the annual administration charge on behalf of the participants under its Contract. Applicants represent that each Company deducts the annual administration charge in reliance on Rule 26a–1 under the 1940 Act, and does not anticipate any profit from this charge.

11. The Companies do not deduct a sales charge from premium payments made under Contracts, but do deduct a contingent deferred sales charge (''CDSC'') on certain full and partial withdrawals of account balance by participants in Group Variable Annuity I and Group Variable Annuity II contracts. The CDSC is designed to cover expenses relating to the sale of Contracts, including commissions and other promotional expenses. During the first six Contract years, the CDSC under a Group Variable Annuity I Contract is 5% of the gross withdrawal amount; the CDSC declines 1% each year thereafter until the charge is 0% in the eleventh and subsequent years. The Companies may impose a CDSC of up to 6% of the gross withdrawal amount on certain total and partial withdrawals of the account balance of a Group Variable Annuity II Contract participant.

12. Each Company will waive the CDSC under its Group Variable Annuity I and Group Variable Annuity II contracts if, at the time of the withdrawal request, the Company receives proof necessary to verify that: (a) the participant has attained the age of 59½; (b) the participant has died; (c) the participant has incurred a disability as defined under the Contract; (d) the participant has terminated employment with the employer (under the Group Variable Annuity II contracts the participant also must be at least 55 years of age). Contractowners of Group Variable Annuity I or Group Variable Annuity II contracts may identify other circumstances under which a CDSC may be waived—e.g., in the event of ''financial hardship.'' Contracts providing such additional benefits to participants may have a declared guaranteed interest rate in the guaranteed interest division which is lower than that for Contracts not providing such benefits.

13. Each Company also may reduce or eliminate the CDSC under any Group Variable Annuity I or Group Annuity II contract on any withdrawal to the extent the Company anticipates that it will incur lower sales expenses or perform fewer sales services because of economies arising from (i) the size of the group covered under a Contract, (ii) an existing relationship with the Contractowner, (iii) the utilization of mass enrollment procedures, or (iv) the performance of sales functions by the Contractowner which the Company would otherwise be required to perform. Death benefit payments and amounts subject to annuitization are not subject to a CDSC. In no event will a CDSC, when added to any CDSC previously imposed as a result of a prior withdrawal, exceed 8.5% of the cumulative contributions to a Contract participant's account.

14. Each Company imposes a daily charge to compensate it for bearing certain mortality and expense risks in connection with the Contracts. This charge is equal to an effective annual rate of 1.20% of the value of the net assets in each Account, and it will not increase. Of that amount, approximately.95% is attributable to mortality risks, and approximately .25% is attributable to expense risks.

15. The mortality risk borne by each Company arises from its contractual obligation to make annuity payments regardless of how long all annuitants or any individual annuitant may live. The expense risk assumed by each Company is the risk that the Company's actual administrative costs will exceed the amount recovered through the annual administration charge. If the mortality and expense risk charge is insufficient to cover actual costs and assumed risks, the loss will fall on the Company. Conversely, if the charge is more than sufficient to cover costs, any excess will be profit to such Company. Each Company may realize a profit from the mortality and expense risk charges.

16. Each Company also deducts a charge for the premium taxes paid on contributions to a Contract. Various states levy a premium tax charge currently ranging from .5% to 4% of premium payments on variable annuity contracts.

17. If a Contract participant should die during the accumulation period, the Company will pay the greater of (a) net contributions or (b) the Contract participant's account balance less any outstanding loan. Although each Company incurs a risk in connection with this death benefit guarantee, there is no extra charge for this death benefit.

Applicants' Legal Analysis and Conditions

1. Section 6(c) of the 1940 Act authorizes the SEC to grant an exemption from any provision, rule or regulation of the 1940 Act to the extent such exemption is necessary or appropriate in the public interest and consistent with the protection of investors and the purposes fairly intended by the policy and provisions of the 1940 Act to do so.

2. Sections 26(a)(2)(c) and 27(c)(2) of the 1940 Act, in relevant part, prohibit a registered unit investment trust, its depositor or principal underwriter, from selling periodic payment plan certificates unless the proceeds of all payments, other than sales loads, are deposited with a qualified bank and are held under arrangements which prohibit any payment to the depositor or principal underwriter except a reasonable fee, as the SEC may prescribe, for performing bookkeeping and other administrative duties normally performed by the bank itself.

3. Applicants seek an order under Section 6(c) of the 1940 Act granting exemptions from Sections 26(a)(2)(C) and 27(c)(2) of the 1940 Act to the extent necessary to permit the deduction of a mortality and expenses risk charge from the assets of the Accounts and Future Accounts under the Contracts and Future Contracts. Applicants also seek exemptive relief for Future Broker-Dealers that may serve as distributors and/or principal underwriters for Contracts and Future Contracts.

4. Applicants state that the terms of the relief requested with respect to any Future Contracts funded by the Accounts and Future Accounts are consistent with the standards set forth in Section 6(c) of the 1940 Act. Applicants represent that the Future Contracts will be materially similar to the Current Contracts. Applicants state that without the requested relief, each Company would have to request and obtain exemptive relief for the Accounts and Future Accounts to fund each Future Contract. Applicants assert that these additional requests for exemptive relief would present no issues under the 1940 Act not already addressed in this application, and the requested relief is appropriate in the public interest because the relief will promote competitiveness in the variable annuity market by eliminating the Applicants' need to file redundant exemptive applications, thereby reducing administrative expenses and maximizing efficient use of resources.

5. Applicants represent that the 1.20% mortality and expense risk charge under the Contracts is reasonable in relation to the risks assumed by each Company under the Contracts, and is within the range of industry practice for comparable annuity contracts, based on a review of the publicly available information regarding products of other companies. Each Company represents that it will maintain at its principal offices, and make available upon request to the Commission or its staff, a memorandum detailing the variable annuity products analyzed, the methodology used in, and the results of, the comparative review.

6. Each Company represents that, before issuing any Future Contracts, it will make the same determinations on the same basis as to the mortality and expense risk charges under such contracts, and will maintain at its principal offices, and will make available upon request to the Commission or its staff, a memorandum setting forth in detail the methodology used in making such determinations.

7. Applicants acknowledge that the CDSC may be insufficient to cover all distribution costs, and that if a profit is realized from the mortality and expense risk charge, all or a portion of such profit may be offset by distribution expenses not reimbursed by the CDSC. Notwithstanding this, each Company has concluded that there is reasonable likelihood that the proposed distribution financing arrangement made with respect to the Contracts and Future Contracts will benefit the Accounts and Future Accounts, Contractowners and Future Contractowners, and Contract and Future Contract participants. The basis for such conclusion is set forth in a memorandum which will be maintained by the Company at its home office and will be available to the Commission or its staff upon request.

8. Each Company represents that, before issuing Future Contracts, it will conclude that there is a reasonable likelihood that the distribution financing arrangements proposed for such contracts will benefit the Accounts and Future Accounts, Future Contractowners, and Future Contract participants. Each Company represents that it will maintain at its executive office, and will make available upon request to the Commission or its staff, a memorandum setting forth the basis for such conclusion.

9. The Company also represents that the Accounts and Future Accounts will invest only in underlying investment companies which have undertaken to have a board of directors or a board of trustees, as applicable, a majority of whom are not ''interested persons'' of such Accounts and Future Accounts—within the meaning of Section 2(a)(19) of the 1940 Act, formulate and approve any plan under Rule 12b–1 under the 1940 Act to finance distribution expenses.

Conclusion

For the reasons set forth above, Applicants represent that the requested exemptions are necessary and appropriate in the public interest and consistent with the protection of investors and purposes fairly intended by the policy and provisions of the 1940 Act.

For the Commission, by the Division of Investment Management, pursuant to delegated authority.

Margaret H. McFarland,

Deputy Secretary.

[FR Doc. 96–22720 Filed 9–5–96; 8:45 am]

BILLING CODE 8010–01–M

[Release No. 35–26567]

Filings Under the Public Utility Holding Company Act of 1935, as Amended (''Act'')

August 30, 1996.

Notice is hereby given that the following filing(s) has/have been made with the Commission pursuant to provisions of the Act and rules promulgated thereunder. All interested persons are referred to the application(s) and/or declaration(s) for complete statements of the proposed transaction(s) summarized below. The application(s) and/or declaration(s) and any amendments thereto is/are available for public inspection through the Commission's Office of Public Reference.

Interested persons wishing to comment or request a hearing on the application(s) and/or declaration(s) should submit their views in writing by September 23, 1996, to the Secretary, Securities and Exchange Commission, Washington, D.C. 20549, and serve a copy on the relevant applicant(s) and/or declarant(s) at the address(es) specified below. Proof of service (by affidavit or, in case of an attorney at law, by certificate) should be filed with the request. Any request for hearing shall identify specifically the issues of fact or law that are disputed. A person who so requests will be notified of any hearing, if ordered, and will receive a copy of any notice or order issued in the matter. After said date, the application(s) and/or declaration(s), as filed or as amended,

may be granted and/or permitted to become effective.

Entergy Corp., et al. (70–8899)

Entergy Corp. (''Entergy''), a registered holding company located at 639 Loyola Avenue, New Orleans, Louisiana 70113, and its retail public utility subsidiary companies, Entergy Arkansas, Inc. (''Arkansas''), 425 West Capitol Avenue, Little Rock, Arkansas 72201, Entergy Gulf States, Inc. (''Gulf States''), 350 Pine Street, Beaumont, Texas 77701, Entergy Mississippi, Inc. (''Mississippi''), 308 East Pearl Street, Jackson, Mississippi 39201, Entergy Louisiana, Inc. (''Louisiana''), and Entergy New Orleans, Inc. (''New Orleans''), both located at 639 Loyola Avenue, New Orleans, Louisiana 70113 (collectively, ''Operating Companies''), as well as System Energy Resources, Inc. (''System Energy''), a generating public utility subsidiary company of Entergy, Entergy Operations, Inc. (''EOI''), a nuclear management public utility of Entergy, both of 1340 Echelon Parkway, Jackson, Mississippi 39213, System Fuels, Inc. (''SFI''), a nonutility subsidiary, 350 Pine Street, Beaumont, Texas 77701, and Entergy's service company subsidiary, Entergy Services, Inc. (''ESI''), 639 Loyola Avenue, New Orleans, Louisiana 70113, have filed jointly an application-declaration under sections 6(a), 7, 9(a), 10, and 12(b) of the Act and rules 43, 45 and 54 thereunder in connection with short-term debt financings.

The Operating Companies and System Energy propose, through November 30, 2001, to borrow through the Entergy System Money Pool [1] and to issue and sell unsecured short-term notes and commercial paper to commercial banks and dealers in such paper. The maximum amount of loans, notes, and commercial paper that each could issue would be limited as follows: Arkansas, $235 million; Gulf States, $340 million; Louisiana, $225 million; Mississippi, $103 million; New Orleans, $35 million; and System Energy, $140 million.

In addition, EOI, ESI, and SFI propose, through November 30, 2001, to borrow through the Money Pool, to borrow from Entergy,[2] and/or to borrow from commercial banks. Any loan agreements or commitments from banks would correspondingly reduce the amount of Entergy's commitment to EOI, ESI and SFI under their respective Loan Agreements. The aggregate principal amount of borrowings outstanding at any one time from the Money Pool, Entergy, and banks would be limited as follows: EOI, $20 million; ESI, $150 million; and SFI, $95 million.[3]

The Money Pool will continue to be administered on behalf of the Participants by ESI under the direction of its Treasurer. The Money Pool consists solely of available funds from the Participants (excluding Entergy) or otherwise invested. the Participants will not borrow funds to participate in the Money Pool. Entergy will invest available funds in, but under no circumstances will be permitted to borrow funds from, the Money Pool.

The Money Pool will be managed to match the available cash and borrowing requirements of the Participants to minimize the need for loans by the Participants from external sources. Notwithstanding the availability of Money Pool funds, the Participants might instead make short-term loans or issue commercial paper to maintain a market presence. The Operating Companies and System Energy will have priority on borrowing funds from the Money Pool; EOI, ESI and SFI will be permitted to borrow through the Money Pool only if, on any given day, funds remain available.

Certain credit agreements of System Energy require, absent a waiver, that its Money Pool borrowings be subordinated to the extent that, upon the occurrence of certain events (such as a default under the credit agreements, insolvency, bankruptcy, liquidation, or reorganization), System Energy would not be permitted to pay principal or interest on Money Pool borrowings, unless or until all obligations under the credit agreements have been met or otherwise provided for.

ESI will invest Money Pool funds not loaned to Participants and allocate returns on the investments to the Participants on a pro rata basis in accordance with their respective interests in such funds. ESI proposes to invest excess funds in securities exempt from section 9(a) of the Act pursuant to section 9(c) of the Act and rule 40 thereunder.

The Operating Companies and System Energy will be entitled to borrow, on any given day, an amount of an equal allocation of such funds among the Participants. Where such an allocation would provide Participants funds in excess of its or their requirements, the excess will be available for loans equally allocated among the remaining Participants. To the extent that EOI, ESI, and SFI are permitted to borrow, the funds available for lending will be allocated in the same manner. Participants that borrow will borrow pro rata from Participants that loan in the proportion that the total amount loaned by the Participant bears to the total amount then being loaned through the Money Pool.

Loans from the investments through the Money Pool will be evidenced on the books of each Participant. All loans will be payable on demand, prepayable without premium or penalty, and will bear interest equal to the daily weighted average investment rate.[4] If there are no excess Money Pool funds to invest, the rate of interest on loans from the Money Pool will be the Daily Federal Funds Effective Rate quoted by the Federal Reserve Bank of New York.

The Operating Companies and System Energy might establish lines of credit with commercial banks, either individually or on a consolidated basis with each other and with EOI, ESI and SFI (together with Operating Companies and System Energy, the ''Borrowers''). The Borrowers will issue and sell unsecured short-term notes payable within one year. The interest on each note will be selected by the Borrower from among four options, but in each instance the interest rate will be comparable to rates generally prevailing tin the market for loans with similar terms for borrowers with comparable credit quality. The notes may, at the option of the Borrower or under certain circumstances with the consent of the lender, be prepayable without premium or penalty, except where interest rates are tied to bank certificate of deposits, the eurodollar market, or certain bid rates.

The Borrower might pay a commitment fee, which will be comparable to those prevailing in the market for loans to borrowers with

[1] The Money Pool consists of available funds, invested by the participating Entergy system companies, which may be borrowed by the participants, excluding Entergy, to meet their respective interim capital needs.

[2] By orders dated June 5, 1990 (HCAR No. 25100), September 17, 1991 (HCAR No. 25376), and March 16, 1994 (HCAR No. 26006), EOI, ESI and SFI, respectively, were each authorized to enter a loan agreement with Entergy (hereinafter referred to for each subsidiary company as the ''EOI Loan Agreement,'' the ''ESI Loan Agreement,'' and the ''SFI Loan Agreement;'' collectively, ''Loan Agreements'').

[3] EOI and SFI currently can borrow up to $15 million and $30 million, respectively, under their respective Loan Agreements with Entergy. In addition to its Loan Agreement with Entergy, SFI has separately authorized credit agreements with Yasuda Trust & Banking Co., Ltd., and the Bank of American National Trust and Savings Association, for $45 million and $20 million, respectively.

[4] The ''daily weighted average investment rate'' is defined as the aggregate of the total interest payable on all investments in the Money Pool portfolio (made from funds not loaned to Participants) multiplied by 360 and then divided by the total amount invested in the Money Pool portfolio.

comparable credit quality. Entergy proposes, where required, to guarantee bank loans for EOI, ESI and SFA, up to the maximum amount each is authorized to borrow.

The Operating Companies and System Energy might issue commercial paper in the form of unsecured notes to mature within not more than 270 days, not prepayable, at a discount not in excess of the then-prevailing maximum discount rate for comparable paper. The commercial paper will be re-sold, with the customary discount, on a nonpublic basis to commercial banks, insurance companies, corporate pension funds, investment trusts, foundation, colleges and university funds, municipal and state funds and other financial and non-financial institutions that normally invest in commercial paper.

The Operating Companies and System Energy propose to use the proceeds from borrowings from the Money Pool and the issuance of short-term notes and commercial paper to provide interim financing for construction expenditures, to meet long-term debt maturities and satisfy sinking fund requirements, as well as for the refunding, redemption, purchase or other acquisition of all or a portion of certain outstanding debt for general corporate purposes. EOI proposes to use the proceeds to finance its interim capital needs. ESI proposes to use the proceeds for the repayment of other borrowings and to fund its service company activities. SFI proposes to use the proceeds to repay other borrowings and to finance its fuel supply activities, including acquiring, owning and financing nuclear materials, related services, and the acquisition and ownership of fuel oil inventory. None of the proceeds authorized herein will be used to invest directly or indirectly in an exempt wholesale generator or foreign utility company.

For the Commission, by the Division of Investment Management, pursuant to delegated authority.

Margaret H. McFarland,

Deputy Secretary.

[FR Doc. 96–22813 Filed 9–5–96; 8:45 am]

BILLING CODE 8010–01–M

[Rel. No. IC–22192; File No. 812–9958]

The Travelers Insurance Company, et al.

August 30, 1996.

AGENCY: The Securities and Exchange Commission (''SEC'' or ''Commission'').

ACTION: Notice of application for an order under the Investment Company Act of 1940 (''1940 Act'').

APPLICANTS: The Travelers Insurance Company (''Travelers''), the Travelers Fund QP for Variable Annuities (''Account'') and Tower Square Securities, Inc. (''Tower'').

RELEVANT 1940 ACT SECTIONS: Order requested under Section 6(c) of the 1940 Act granting exemptions from Sections 26(a)(2)(C) and 27(c)(2) of the 1940 Act.

SUMMARY OF THE APPLICATION: Applicants seek an order under Section 6(c) of the 1940 Act granting exemptions from sections 26(a)(2)(C) and 27(c)(2) to the extent necessary to permit the deduction of a morality and expense risk charge from the assets of the Account or other separate accounts established by Travelers in the future (''Other Accounts'') to support certain group variable annuity contracts (''Current Contracts'') as well as other variable annuity contracts that are materially similar to the Current Contracts (''Future Contracts,'' together with the Current Contracts, ''Contracts''). Applicants request that such exemptive relief extend to any broker-dealer other than Tower that is affiliated with travelers, is registered as a broker-dealer under the Securities Exchange Act of 1934, and may serve in the future as principal underwriter of the Contracts (''Future Underwriter'').

FILING DATES: The application was filed on January 23, 1996. Amendments to the application were filed on July 31, 1996, August 15, 1996, and August 30, 1996.

HEARING OR NOTIFICATION OF HEARING: An order granting the application will be issued unless the Commission orders a hearing. Interested persons may request a hearing by writing to the Secretary of the SEC and serving Applicants with a copy of the request, personally or by mail. Hearing requests should be received by the SEC by 5:30 p.m. on September 24, 1996, and should be accompanied by proof of service on Applicants in the form of an affidavit or, for lawyers, a certificate of service. Hearing requests should state the nature of the requestor's interest, the reason for the request, and the issues contested. Persons may request notification of a hearing by writing to the Secretary of the Commission.

ADDRESSES: Secretary, Securities and Exchange Commission, 450 Fifth Street, N.W., Washington, D.C. 20549. Applicants, Kathleen A. McGah, Counsel and Assistant Secretary, The Travelers Insurance Company, One Tower Square, Hartford, Connecticut 06183.

FOR FURTHER INFORMATION CONTACT: Mark C. Amorosi, Attorney, or Patrice M. Pitts, Special Counsel, Office of Insurance Products (Division of Investment Management), at (202) 942–0670.

SUPPLEMENTARY INFORMATION: Following is a summary of the application; the complete application is available for a fee from the Public Reference Branch of the SEC.

Applicants' Representations

1. Travelers, a stock life insurance company organized in Connecticut and an indirect wholly-owned subsidiary of Travelers Group Inc., is the sponsor and depositor of the Account and will be the sponsor and depositor of any Other Account. Travelers is licensed to conduct life insurance and annuity business in all states of the United States, the District of Columbia, Puerto Rico, Guam, the U.S. and British Virgin Islands and the Bahamas.

2. The Account was established on December 25, 1995, as a separate account under Connecticut law to fund group flexible premium deferred variable annuity contracts and certificates. The Account is registered under the 1940 Act as a unit investment trust and will be used to fund the Contracts. The Account is divided into 27 subaccounts (the ''Subaccounts''), each of which will invest solely in shares of a registered open-end management investment company or portfolio thereof.

3. Tower, an affiliate of Travelers and an indirect wholly-owned subsidiary of Travelers Group Inc., is the distributor of the Current Contracts. Tower is registered as a broker-dealer under the Securities Exchange Act of 1934 (''1934 Act'') and is a member of the National Association of Securities Dealers, Inc. Any Future Underwriter will be affiliated with Travelers and registered as a broker-dealer under the 1934 Act.

4. The Current Contracts are designed to provide retirement payments and other benefits for persons covered under certain retirement plans qualified for federal income tax advantages available under the Internal Revenue Code of 1986, as amended, and for persons covered under retirement plans that do not qualify for such tax advantages. The Current Contracts may be sold on an allocated or unallocated basis. Purchase payments under the Current Contracts may be made by or on behalf of a participant in a Current Contract (''Participant'') who is covered under a retirement plan.

5. The Current Contracts provide for, among other things: (a) minimum purchase payments; (b) allocation of purchase payments to one or more of the Account's Subaccounts, or to the fixed account, or both; and (c) several

fixed and variable annuity payment options. In addition, a death benefit is available under allocated Current Contracts. A death benefit is not available under unallocated Current Contracts, although one may be added to the unallocated Current Contracts in the future.

6. Under the death benefit for allocated Current Contracts, if the annuitant or the Current Contract owner dies before age 75 and before the maturity date, Travelers will pay as a death benefit an amount equal to the greater of (a) or (b) below, less any applicable premium tax:

(a) The cash value of the Participant's individual account; or

(b) Total purchase payments made to the Participant's individual account, less any surrenders not previously deducted.

If the annuitant or the Current Contract owner dies on or after age 75 and before the maturity date, Travelers will pay as a death benefit the value of the Participant's individual account, less any applicable premium tax and any surrenders not previously deducted.

7. The fees and charges assessed under the Current Contracts are likely to vary from one Current Contract to the next depending on the size of the Current Contract, the possible involvement of a third party administrator (''TPA'') and a competitive bidding process which may include negotiation. The Current Contract design allows Travelers maximum flexibility, within the limitations imposed by law to custom design a charge structure which is likely to be acceptable to a prospective Current Contract owner. The application sets forth the maximum levels for each of the types of sales charges, mortality and expense risk charges, administrative expense charges and any allocation and transfer fees.

8. In most cases, only one of two administrative charges will apply to allocated Current Contracts. These charges cannot be increased during the life of the Current Contracts. The charges represent reimbursement of only the actual administrative costs expected to be incurred over the life of the Current Contracts and are not designed to yield a profit. Applicants will rely on Rule 26a–1 in deducting these charges.

9. A maximum semiannual policy fee of $15 may be deducted from each Participant's individual account during the accumulation period. Travelers also may assess an annual administrative charge to compensate it for certain administrative and operating expenses of the underlying funds. The administrative charge, equal to a maximum of 0.10% annually, may be deducted on each valuation date from amounts held in the underlying funds. This charge will apply during both the accumulation and the annuity periods.

10. The level of the semiannual policy fee and of the administrative expense charge during the accumulation period (but not the annuity period) is subject to negotiation. In determining the level of the semiannual fee and the administrative charge during the accumulation period, Travelers considers the following factors: (a) the size and characteristics of the Current Contract and the group to which it is issued, including the total annual amount of the purchase payments per Participant, the expected turnover of employees, whether the Current Contract owner will remit purchase payment allocations electronically, and any other factors pertaining to the characteristics of the group or the plan which may enable Travelers to reduce the expense of administration; (b) determination of Travelers' anticipated expenses in administering the Current Contract, such as billing for purchase payments, producing periodic reports, providing for the direct payment of Current Contract charges rather than having them deducted from Current Contract values, and any other factors pertaining to the level and expense of administrative services which will be provided under the Current Contract; and (c) the involvement of a TPA and/or agent.

11. No sales charge is deducted at the time purchase payments are applied under the Current Contracts. A contingent deferred sales charge or a surrender charge, as negotiated, will be assessed upon certain full or partial surrenders. The amounts obtained from the contingent deferred sales charge or surrender charge will be used to defray expenses incurred in the sale and marketing of the Current Contracts.

12. A sales charge may apply if all or part of the Current Contract value is surrendered during the first eight years following a purchase payment. The maximum contingent deferred sales charge is 5% of each purchase payment for a period of five years from the date the purchase payment was made. The maximum surrender charge is 5% of the amount surrendered for the first two Current Contract years; up to 4% in years three and four; up to 3% in years five and six; up to 2% in years seven and eight and 0% in the ninth year. The surrender charge cannot be increased during the life of the Current Contracts. Travelers does not expect that the contingent deferred sales charge will cover sales and distribution expenses incurred in connection with the Current Contracts.

13. The contingent deferred sales charge and the surrender charge can be reduced or restructured if Travelers anticipates that it will incur decreased sales-related expenses because of the nature of the plan to which the Current Contract is issued or the involvement of a TPA. When considering a change in the sales charges, Travelers will take into account: (a) the expected level of initial agent or Travelers involvement during the establishment and maintenance of the Current Contract including the amount of enrollment activity required, and the amount of service required by the Current Contract owner; (b) Current Contract owner, TPA or agent involvement in conducting ongoing enrollment of subsequently eligible Participants; (c) the expected level of commission Travelers may pay to the TPA or agent for distribution expenses; and (d) any other factors which Travelers anticipates will increase or decrease the sales-related expenses associated with the sale of the Current Contract.

14. To compensate Travelers for assuming certain mortality and expense risks, Travelers will deduct a mortality and expense risk charge equal, on an annual basis, to 1.20% (approximately 0.90% for mortality risk and 0.30% for expense risk) of the average daily net assets allocated to each underlying fund.

15. The mortality and expense risk charge is subject to negotiation. In determining the level of the mortality and expense risk charge, Travelers will consider the size of the plan, the number of employees, plan participants, and the demographics of the participants which may reduce mortality and expense risks of the plan. Once established, this charge cannot be increased during the life of the Current Contract.

16. Travelers assumes certain mortality risks by its contractual obligation to continue to make annuity payments for the life of the annuitant under annuity obligations that involve life contingencies. This assures each annuitant that neither the annuitant's own longevity nor an improvement in life expectancy generally will have an adverse effect on the annuity payments received under the Current Contracts. This relieves the annuitant from the risk of outliving the amounts accumulated for retirement. Applicants state that these amounts are guaranteed for the life of the Current Contracts. Travelers assumes additional mortality and certain expense risks under the Current

Contracts by its contractual obligation to pay a death benefit in a lump sum (or in the form of an annuity option) upon the death of the annuitant or Current Contract owner prior to the maturity of the Current Contract.

17. Travelers assumes an additional expense risk because the maximum administrative charges may be insufficient to cover actual administrative expenses. These include the costs and expenses of: (a) processing purchase payments, death claims, annuity payments, surrenders and transfers; (b) periodic and other reports; (c) providing on-line information about the Current Contracts; (d) calculating mortality and expense risk charges; (e) preparing voting materials and tax reports; (f) updating registration statements for the Current Contracts; and (g) actuarial and other expenses.

18. If the mortality and expense risk charge and the administrative expense charges are insufficient to cover the expenses and costs assumed, the loss will be borne by Travelers. Conversely, if the amount deducted for the mortality and expense risk proves more than sufficient, the excess will represent profit to Travelers. Travelers does not expect to profit from administrative expense charges deducted from the Account under the Current Contracts; Travelers does expect to profit from the mortality and expense risk charge. Any profit realized from this charge will be available to Travelers for any proper corporate purpose, including, among other things, payment of distribution expenses.

19. Certain state and local governments impose premium taxes. Such taxes currently range from 0.5% to 5.0% and depend on the state of the Current Contract owner's residence or the state in which the Current Contract was sold. A deduction for premium taxes may be made when a Current Contract is purchased, when a Current Contract is surrendered, when retirement payments begin, or upon payment of a death benefit.

20. Prior to the maturity date, all or any part of the Current Contract value may be reallocated among the underlying funds without fee, penalty or charge. Applicants state that there currently are no restrictions on the frequently of transfers, but Travelers reserves the right to limit transfers to one in any six-month period.

Applicant's Legal Analysis

1. Sections 26(a)(2)(C) and 27(c)(2) of the 1940 Act, in relevant part, prohibit a registered unit investment trust, its depositor or principal underwriter, from selling periodic payment plan certificates unless the proceeds of all payments, other than sales load, are deposited with a qualified bank and held under arrangements which prohibit any payment to the depositor or principal underwriter except a reasonable fee, as the Commission may prescribe, for performing bookkeeping and other administrative duties normally performed by the bank itself.

2. Section 6(c) of the 1940 Act authorizes the Commission, by order upon application, to conditionally or unconditionally grant an exemption from any provision, rule or regulation of the 1940 Act to the extent that the exemption is necessary or appropriate in the public interest and consistent with the protection of investors and the purposes fairly intended by the policy and provisions of the 1940 Act.

3. Applicants request an order under Section 6(c) exempting them from Sections 26(a)(2)(C) and 27(c)(2) of the 1940 Act to the extent necessary to permit the deduction of the mortality and expense risk charge from the assets of the Account or Other Account that issue the Contracts. Applicants also request that such relief extend to any Future Underwriter.

4. Applicants submit that the request for future relief is consistent with the standards set forth in Section 6(c) of the 1940 Act. Such future relief will promote competitiveness in the variable annuity market by eliminating the need for Travelers to file redundant exemptive applications, thereby reducing administrative expenses and maximizing the efficient use of its resources. The delay and expense involved in repeatedly having to seek exemptive relief would impair Travelers' ability effectively to take advantage of business opportunities as these opportunities arise. If Travelers were required repeatedly to seek exemptive relief with respect to the same issues addressed in this application, investors would not receive any benefit or additional protection thereby. Rather, Applicants asserts, investors may be disadvantaged as a result of Travelers; increased overhead expenses.

5. Applicants represent that even the maximum level of the mortality and expense risk charge under the Contracts is reasonable in relation to the risks assumed by Travelers under the Contracts and is within the range of industry practice for comparable variable annuity contracts. Applicants state that Travelers has reviewed publicly-available information about other annuity products, taking into consideration such factors as: estimated costs, now and in the future; guaranteed minimum death benefits; minimum initial and subsequent purchase payments; other contract charges; the manner in which charges are imposed; market sector; investment options under contracts; and availability of the Contract for use in connection with qualified and nonqualified plans. Applicants state that Travelers will maintain at its principal office, and make available on request of the Commission or its staff, a memorandum setting forth in detail the variable annuity products analyzed and the; methodology used in, and the results of, its comparative review.

6. Applicants acknowledge that the surrender charge may be insufficient to cover all costs relating to the distribution of the Contracts and that, if a profit is realized from the mortality and expense risk charge, all or a portion of the profit may be offset by distribution expenses not reimbursed by the contingent deferred sales charge. In such circumstances, a portion of the mortality and expense risk charge might be viewed as providing for a portion of the cost relating to distribution of the Contracts.

7. Notwithstanding the foregoing, Travelers has concluded that there is a reasonable likelihood that the proposed distribution financing arrangements used in connection with the Contracts will benefit the Account, Other Accounts, and owners of the Contracts. The basis for such conclusion is set forth in a memorandum that will be maintained by Travelers at is principal officer and will be available to the Commission or its staff upon request.

8. Travelers represents that the Account and Other Accounts will invest only in underlying mutual funds which, in the event they should adopt any plan pursuant to Rule 12b–1 under the 1940 Act to finance distribution expenses, would have such a plan formulated and approved by a board of directors, a majority of the members of which are not ''interested person'' of such fund within the meaning of Section 2(a)(19) of the 1940 Act.

Conclusion

Applicants submit that, for the reasons stated in the application, the requested exemptions from Sections 26(a)(2)(C) and 27(c)(2) of the 1940 Act to deduct the mortality and expense risk charge under the Contracts are necessary and appropriate in the public interest and consistent with the protection of investors and the purposes fairly intended by the policies and provisions of the 1940 Act.

For the Commission, by the Division of Investment Management, pursuant to delegated authority.

Margaret H. McFarland,

Deputy Secretary.

[FR Doc. 96–22719 Filed 9–5–96; 8:45 am]

BILLING CODE 8010–01–M

[Release No. 34–37626; File No. SR–MSRB–96–06]

Self-Regulatory Organizations; Notice of Filing of Proposed Rule Change by the Municipal Securities Rulemaking Board Relating to Telemarketing Rules

August 30, 1996.

Pursuant to Section 19(b)(1) of the Securities Exchange Act of 1934 (''Act''), [1] notice is hereby given that on July 30, 1996, the Municipal Securities Rulemaking Board (''Board'' or ''MSRB'') filed with the Securities and Exchange Commission (''Commission'') the proposed rule change as described in Items I, II, and III below, which Items have been prepared by the self-regulatory organization. The Commission is publishing this notice to solicit comments on the proposed rule change from interested persons.

I. Self-Regulatory Organization's Statement of the Terms of Substance of the Proposed Rule Change

The MSRB is filing herewith a proposed rule change relating to telemarketing rules. Below is the text of the proposed rule change. Proposed new language is underlined; proposed deletions are in brackets.

Rule G–39, Telemarketing

No broker, dealer or municipal securities dealer or person associated with a broker, dealer or municipal securities dealer shall:

(a) make outbound telephone calls to the residence of any person for the purpose of soliciting the purchase of municipal securities or related services at any time other than between 8 a.m. and 9 p.m. local time at the called person's location, without the prior consent of the person; or

(b) make an outbound telephone call to any person for the purpose of soliciting the purchase of municipal securities or related services without disclosing promptly and in a clear and conspicuous manner to the called person the following information:

(i) the identity of the caller and the firm;

(ii) the telephone number or address at which the caller may be contacted; and

(iii) that the purpose of the call is to solicit the purchase of municipal securities or related services.

(c) The prohibitions of paragraphs (a) and (b) shall not apply to telephone calls by any person associated with a broker, dealer, or municipal securities dealer, or another associated person acting at the direction of such person for the purpose of maintaining and servicing the accounts of existing customers of the broker, dealer or municipal securities dealer under the control of or assigned to such associated person:

(i) to an existing customer who, within the preceding twelve months, has effected a securities transaction in, or made a deposit of funds or securities into, an account that, at the time of the transaction or the deposit, was under the control of or assigned to, such associated person;

(ii) to an existing customer who previously has effected a securities transaction in, or made a deposit of funds or securities into, an account that, at the time of the transaction or deposit, was under the control of or assigned to, such associated person, provided that such customer's account has earned interest or dividend income during the preceding twelve months, or

(iii) to a broker, dealer or municipal securities dealer.

For the purposes of paragraph (c), the term ''existing customer'' means a customer for who the broker, dealer or municipal securities dealer, or a clearing broker or dealer on behalf of such broker, dealer or municipal securities dealer, carries an account.

Rule G–21. Advertising

(a) Definition of ''Advertisement.'' For purposes of this rule, the term ''advertisement'' means any material (other than listings of offerings) published or designed for use in the public, *including electronic,* media, or any promotional literature designed for dissemination to the public, including any notice, circular, report, market letter, form letter, *telemarketing script* or reprint or excerpt of the forgoing. The term does not apply to preliminary official statements or official statements, but does apply to abstracts or summaries of official statements, offering circulars and other such similar documents prepared by [municipal securities] brokers, *dealers* or municipal securities dealers.

(b)–(e) No change.

Rule G–8. Books and Records to be Made by Brokers, Dealers and Municipal Securities Dealers

(a) Description of Books and Records Required to be Made. Except as otherwise specifically indicated in this rule, every broker, dealer and municipal securities dealer shall make and keep current the following books and records, to the extent applicable to the business of such broker, dealer or municipal securities dealer:

(i)–(xviii) No change.

(xix) Telemarketing Requirements.

(A) Each broker, dealer and municipal securities dealer shall make and maintain a centralized do-not-call list of persons who do not wish to receive telephone solicitations from such broker, dealer or municipal securities dealer or its associated persons.

(B) No broker, dealer or municipal securities dealer or person associated with such broker, dealer or municipal securities dealer shall obtain from a customer or submit for payment a check, draft or other form of negotiable paper drawn on a customer's checking, savings, share, or similar account, without that person's express written authorization, which may include the customer's signature on the negotiable instrument.

(b)–(e) No change.

(f) Compliance with Rule 17a–3. Brokers, dealers and municipal securities dealers other than bank dealers which are in compliance with rule 17a–3 of the Commission will be deemed to be in compliance with the requirements of this rule, provided that the information required by subparagraph (a)(iv)(D) of this rule as it relates to uncompleted transactions involving customers; paragraph (a)(viii); paragraph (a)(xi); paragraph (a)(xii); paragraph (a)(xiii); paragraph (a)(xiv); paragraph (a)(xv); paragraph (a)(xvi); [and] paragraph (a)(xviii); *and paragraph (a)(xix)* shall in any event be maintained.

Rule G–9. Preservation of Records

(a) No change.

(b) Records to be Preserved for Three Years. Every [municipal securities] broker, *dealer* and municipal securities dealer shall preserve the following records for a period of not less than three years:

(i)–(ix) No change.

(x) all records of deliveries of rule G–32 disclosures required to be retained as described in rule G–8(a)(xiii); [and]

(xi) the records to be maintained pursuant to rule G–8(a)(xv)*;*

(*xii) the authorization required by rule G–8(a)(xix)(B); and*

---

[1] 15 U.S.C. § 78s(b)(1).

(xiii) each advertisement from the date of each use.

(c)–(g) No change.

* * * * *

II. Self-Regulatory Organization's Statement of the Purpose of, and Statutory Basis for, the Proposed Rule Change

In its filing with the Commission, the self-regulatory organization included statements concerning the purpose of and basis for the proposed rule change and discussed any comments it received on the proposed rule change. The text of these statements may be examined at the places specified in Item IV below. The self-regulatory organization has prepared summaries, set forth in Sections A, B, and C below, of the most significant aspects of such statements.

A. Self-Regulatory Organization's Statement of the Purpose of, and Statutory Basis for, the Proposed Rule Change

1. Purpose

Introduction and Background

Under the Telemarketing and Consumer Fraud and Abuse Prevention Act (''Telemarketing Act''), which became law in August 1994, the Federal Trade Commission adopted detailed regulations (''FTC rules'') to prohibit deceptive and abusive telemarketing acts and practices that became effective on December 31, 1995. The FTC rules, among other things, (i) require the maintenance of ''do-not-call'' lists and procedures, (ii) prohibit abusive, annoying, or harassing telemarketing calls, (ii) prohibit abusive, annoying, or harassing telemarketing calls, (iii) prohibit telemarketing calls before 8 a.m. or after 9 p.m., (iv) require a telemarketer to identify himself, the company he works for, and the purpose of the call, and (v) require express written authorization or other verifiable authorization from the customer before use of negotiable instruments called ''demand drafts.'' [2]

While the FCC rules are applicable to brokers, dealers and municipal securities dealers that engage in telephone solicitation to market their products and services, those regulations cannot be enforced by either the SEC or the securities self-regulatory organizations (''SROs''). The FTC rules expressly do not apply to brokers, dealers, and other securities industry professionals. Under the Telemarketing Act, the SEC is required either to promulgate or to require the SROs to promulgate rules substantially similar to the FTC rules, unless the SEC determines either that such rules are not necessary or appropriate for the protection of investors or the maintenance of fair and orderly markets or that existing federal securities laws or SEC rules already provide for such protection.[3] The staff of the SEC has advised the MSRB that it believes that additional rulemaking is necessary to satisfy the requirements of the Telemarketing Act. The Board intends to implement requirement (ii) referenced above by issuing an interpretation that such conduct is violative of existing rules and implement requirements (i) and (iii)–(v) by amending its rules.[4]

Description of Proposed Amendments

Do Not Call List

As noted above, the Commission is required by the Telemarketing Act to promulgate, or require the SROs to promulgate, rules substantially similar to the FTC rules, unless existing rules provide substantially similar protection in securities transactions, or such additional rules otherwise are not necessary or appropriate. Brokers, dealers and municipal securities dealers who engage in telephone solicitation to market their products and services are subject to the requirements of the rules of the FCC relating to telemarketing practices and the rights of telephone consumers and shall refer to FCC rules for specific restrictions on telephone solicitations. This includes, but is not limited to, the requirements to make and maintain a list of persons who do not want to receive telephone solicitations. The proposed rule change amends rule G–8, on books and records, so that each broker, dealer and municipal securities dealer that engages in telephone solicitation to market its products and services is required to make and maintain a centralized do-not-call list of persons who do not wish to receive telephone solicitations from a broker, dealer or municipal securities dealer or a person associated with a broker, dealer or municipal securities dealer.

Time Limitations and Disclosure

The proposed rule change adds proposed rule G–39, on telemarketing. Paragraph (a) prohibits a broker, dealer or municipal securities dealer or a person associated with a broker, dealer or municipal securities dealer from making outbound telephone calls to a member of the public's residence for the purpose of soliciting the purchase of municipal securities or related services at any time other than between 8 a.m. and 9 p.m. local time at the called person's location, without the prior consent of the person. Paragraph (b) requires such broker, dealer or municipal securities dealer or a person associated with a broker, dealer or municipal securities dealer to promptly disclose to the called person in a clear and conspicuous manner the caller's identity and firm, the telephone number or address at which the caller may be contacted, and that the purpose of the call is to solicit the purchase of municipal securities or related services.

Paragraph (c) to proposed rule G–39 creates exemptions from the time-of-day and disclosure requirements of paragraphs (a) and (b) for telephone calls by associated persons, or another

[2] Pursuant to the Telephone Consumer Protection Act, the Federal Communications Commission (''FCC'') adopted rules in December 1992 that, among other things, (1) prohibit cold-calls to residential telephone customers before 8 a.m. or after 9 p.m. (local time at the called party's location) and (2) require persons or entities engaging in cold-calling to institute procedures for maintaining a ''do-not-call'' list that includes, at a minimum, (a) a written policy for maintaining the do-not-call list, (b) training personnel in the existence and the use thereof, (c) recording a consumer's name and telephone number on the do-not-call list at the time the request not to receive calls is made, and retaining such information on the do-not-call list for a period of at least ten years, and (d) requiring telephone solicitors to provide the called party with the name of the individual caller, the name of the person or entity on whose behalf the call is being made and a telephone number or address at which such person or entity may be contacted. 57 FR 48333 (codified at 47 CFR § 64.1200). With certain limited exceptions, the FCC rules apply to all residential telephone solicitations, including those relating to securities transactions. *Id.* The term ''telephone solicitation'' refers to the initiation of a telephone call or message for the purpose of encouraging the purchase or rental of, or investment in, property, goods, or services, which is transmitted to any person, other than with the called person's express invitation or permission, or to a person with whom the caller has an established business relationship, or by tax-exempt non-profit organization. *Id.*

[3] Specifically, Section 3(d)(1)(B) of the Telemarketing Act provides that the Commission is not required to promulgate a rule under Section 3(d)(1)(A) if it determines that (i) federal securities laws or rules adopted by the Commission thereunder provide protection from deceptive and other abusive telemarketing by persons described in Section 3(d)(2) substantially similar to that provided by rules promulgated by the Federal Trade Commission under Section 3(a) or (ii) a rule promulgated by the Commission is not necessary or appropriate in the public interest, or for the protection of investors, or would be inconsistent with the maintenance of fair and orderly markets, 15 U.S.C. § 6102(d)(1)(B).

[4] The Board intends to implement the requirement in (ii) referenced above by issuing an interpretation that abusive telemarketing calls are inconsistent with just and equitable principles of trade. At its July 1996 meeting, the Board authorized an interpretive notice of rule G–17, on fair dealing, to clarify that the use of threats, intimidation, or profane or obscene language, and calling a person repeatedly or continuously, with intent to annoy, abuse, or harass the called party, is inconsistent with just and equitable principles of trade. The Board intends to publish this notice in the near future.

associated person acting at the direction of such associated persons, for purposes of maintaining and servicing existing customers assigned to or under the control of such associated persons, to certain categories of ''existing customers.'' Paragraph (c) defines ''existing customer'' as a customer for whom the broker, dealer or municipal securities dealer, or a clearing broker or dealer on behalf of such broker, dealer or municipal securities dealer, carries an account. Proposed subparagraph (c)(i) exempts such calls to an existing customer who, within the preceding twelve months, has effected a securities transaction in, or made a deposit of funds or securities into, an account under the control of or assigned to such associated person at the time of the transaction or deposit. Proposed subparagraph (c)(ii) exempts such calls to an existing customer who, at any time, has effected a securities transaction in, or made a deposit of funds or securities into an account that was under the control of or assigned to such associated person at the time of the transaction or deposit, as long as such customer's account has earned interest or dividend income during the preceding twelve months. Proposed subparagraph (c)(iii) exempts telephone calls to a broker, dealer or municipal securities dealer.

Subparagraphs (c) (i) and (ii) together exclude only some calls to existing customers from the time-of-day and disclosure requirements of the proposed rule. An associated person, or another associated person acting at the direction of such associated person, may contact a customer without complying with the requirements of the rule if the customer has effected a transaction or made a deposit during the past year into an account controlled by such associated person, or if the customer has effected a transaction or made a deposit at any time into an account controlled by such associated person and the customer's account has earned interest or dividend income during the past year. Therefore, calls to certain older or inactive accounts that fall outside these parameters would not be covered by the exemption.

The Telemarketing Act specifically requires the SEC to establish rules or require the SROs to promulgate telemarketing rules consistent with the legislation, unless the SEC determines that the federal securities laws or SEC rules provide protection from abusive telemarketing similar to the rules adopted by the FTC or that a rule by the SEC is not necessary in the public interest. The Board believes that it is both appropriate and necessary to create an exemption for calls to a class of customers for whom personal and timely contact with a dealer is important, particularly in the emerging environment of 24-hour trading and trading in multiple time zones across the United States where prompt contact with customers to respond to market developments may be necessary. Specifically, the Board believes that the failure to create such an exemption would be harmful for those securities customers for whom the need exists to be called in a timely manner on certain occasions, and thus inconsistent with the mandate of the Telemarketing Act. The Board, however, also believes that an exemption for existing customers should not extend to all customers, and should not cover calls to those customers whose accounts do not meet certain minimum levels of activity.

Demand Draft Authorization and Recordkeeping

The proposed rule change amends rule G–8, on books and records, to prohibit a member from obtaining from a customer or submitting for payment a check, draft, or other form of negotiable paper drawn on a customer's checking, savings, share, or similar account (''demand draft'') without that person's express written authorization, which may include the customer's signature on the instrument. The proposed rule change to rule G–9, on preservation of records, requires the retention of such authorization for a period of three years. A ''demand draft'' is a method for obtaining funds from a customer's bank account without that person's signature on a negotiable instrument. The customer provides a potential payee with bank account identification information that permits the payee to create a piece of paper that will be processed like a check, including the words ''signature on file'' or ''signature pre-approved'' in the location where the customer's signature normally appears. Most potential payees obtain a written authorization for the use of such a demand draft, but the FTC found that in certain cases only oral authorization was provided by the customer. The new language in rule G–8(a)(xix) is drawn substantially from the FTC rule, with the difference that the proposed rule change required that the customer provide written authorization of a negotiable instrument, in comparison to the FTC rule which would permit both written and oral authorization.[5] The provision in the proposed rule for demand drafts is only intended to reflect and implement the same requirement as set forth in the FTC rule.

Telemarketing Scripts

The FTC rules contain a recordkeeping requirement that all substantially different telemarketing scripts be retained. The Board is amending its definition of ''advertisement,'' in rule G–21, to include ''telemarketing scripts'' within that definition. Thus, the associated record retention requirement for advertisements contained in the proposed change to rule G–9(b)(xiii), on record retention, will require dealers to retain telemarketing scripts for three years.

The Board is also amending the definition of ''advertisement'' to include ''electronic'' messages sent via computer. The inclusion of the term ''electronic'' within the definition of ''advertisement'' is intended to apply to communication available to all network subscribers including items displayed over network bulletin boards, and it is intended to apply to messages sent directly to individuals or targeted groups.

2. Statutory Basis

The Board believes the proposed change is consistent with Section 15B(b)(2)(C) of Act,[6] which provides that the Board's rules be designed to prevent fraudulent and manipulative acts and practices, to promote just and equitable principles of trade, to foster cooperation and coordination with persons engaged in regulating, clearing, settling, processing information with respect to, and facilitating transactions in municipal securities, to remove impediments to and perfect the mechanism of a free and open market in municipal securities, and, in general, to protect investors and the public interest.

B. Self-Regulatory Organization's Statement on Burden on Competition

The MSRB does not believe that the proposed rule change will impose any inappropriate burden on competition.

C. Self-Regulatory Organization's Statement on Comments on the Proposed Rule Change Received From Members, Participants, or Others

No written comments were either solicited or received.

III. Date of Effectiveness of the Proposed Rule Change and Timing for Commission Action

Within 35 days of the publication of this notice in the Federal Register or

[5] § 310.3 of FTC Rules.

[6] 15 U.S.C. 78*o*–4.

within such longer period (i) as the Commission may designate up to 90 days of such date if it finds such longer period to be appropriate and publishes its reasons for so finding or (ii) as to which the self-regulatory organization consents, the Commission will:

(A) By order approve the proposed rule change, or

(B) Institute proceedings to determine whether the proposed rule change should be disapproved.

IV. Solicitation of Comments

Interested persons are invited to submit written data, views, and arguments concerning the foregoing. Comments particularly are requested as to whether the proposed rule change satisfies the requirements of the Telemarketing Act. Persons making written submissions should file six copies thereof with the Secretary, Securities and Exchange Commission, 450 Fifth Street, N.W., Washington, D.C. 20549. Copies of the submissions, all subsequent amendments, all written statements with respect to the proposed rule change that are filed with the Commission, and all written communications relating to the proposed rule change between the Commission and any person, other than those that may be withheld from the public in accordance with the provisions of 5 U.S.C. 552, will be available for inspection and copying in the Commission's Public Reference Room. Copies of the filing will also be available for inspection and copying at the Board's principal offices. All submissions should refer to File No. SR–MSRB–96–06 and should be submitted by September 27, 1996.

For the Commission by the Division of Market Regulation, pursuant to delegated authority, 17 CFR 200.30–3(a)(12).

Margaret H. McFarland,

Deputy Secretary.

[FR Doc. 96–22814 Filed 9–5–96; 8:45 am]

BILLING CODE 8010–01–M

[Release No. 34–37625; File Nos. SR–Philadep–96–14]

Self-Regulatory Organization; Philadelphia Depository Trust Company; Notice of Filing and Order Granting Accelerated Partial Permanent Approval and Accelerated Partial Temporary Approval of a Proposed Rule Change Seeking Permanent Approval of the Inter-Depository Delivery Procedures and the Participants Fund Formulas

August 30, 1996.

Pursuant to Section 19(b)(1) of the Securities Exchange Act of 1934 (''Act''),[1] notice is hereby given that on July 26, 1996, the Philadelphia Depository Trust Company (''Philadep'') filed with the Securities and Exchange Commission (''Commission'') the proposed rule change (File No. SR–Philadep–96–14) as described in Items I and II below, which items have been prepared primarily by Philadep. The Commission is publishing this notice and order to solicit comments from interested persons and to grant accelerated permanent approval of the portion of the proposed rule change relating to inter-depository delivery procedures and to grant accelerated temporary approval through December 31, 1996, of the portion of the proposed rule change relating to Philadep's participants fund formulas.

I. Self-Regulatory Organization's Statement of the Terms of Substance of the Proposed Rule Change

The proposed rule change seeks permanent approval of Philadep's inter-depository delivery procedures and of Philadep's participants fund formulas. The Commission previously granted partial temporary approval to a proposed rule change establishing Philadep's procedures for inter-depository deliveries and Philadep's participants fund formulas as part of the conversion of Philadep's money settlement system from a next-day funds settlement (''NDFS'') to a same-day funds settlement (''SDFS'') system.[2]

II. Self-Regulatory Organization's Statement of the Purpose of, and Statutory Basis for, the Proposed Rule Change

In its filing with the Commission, Philadep included statements concerning the purpose of and basis for the proposed rule change and discussed any comments that it received on the proposed rule change. The text of these statements may be examined at the places specified in Item IV below. Philadep has prepared summaries, set forth in sections (A), (B), and (C) below, of the most significant aspects of such statements.[3]

(A) Self-Regulatory Organization's Statement of the Purpose of, and Statutory Basis for, the Proposed Rule Change

On February 22, 1996, Philadep converted its processing environment from an NDSF system to an SDFS system. In an effort to reduce risk in an SDFS settlement environment, the Stock Clearing Corporation of Philadelphia (''SCCP'') and Philadep implemented a new system and new controls with enhanced processing capabilities. The Commission approved Philadep's SDFS system on a permanent basis for all aspects of the filing except the participants fund formulas and the inter-depository delivery procedures.[4]

1. Inter-Depository Delivery Procedures

When processing a participant's delivery to The Depository Trust Company (''DTC''), Philadep employs an immediate update technique whereby a delivering participant's security position, collateral, and settlement account are immediately updated if the delivering participant has sufficient securities and collateral to allow the delivery to be completed. The delivering participant's position is reduced by the quantity of securities delivered, its settlement account is credited for the settlement value of the transaction, and its collateral monitor is increased by the settlement credit received and reduced by the collateral value of the securities delivered (provided the securities being delivered are part of the participant's collateral position).

Once a delivery satisfies Philadep's risk management controls and completes at Philadep (*e.g.*, the participant has sufficient securities to make the delivery and the participant's collateral monitor will not become negative because of the delivery), Philadep send the delivery to DTC where it is subject to DTC's internal risk management controls. In certain instances, DTC's internal risk management controls will prevent a delivery from completing (*i.e.*, the receiving participant does not have sufficient collateral or the receipt would

[1] 15 U.S.C. 78s(b)(1) (1988).

[2] Securities Exchange Act Release No. 36876 (February 22, 1996), 61 FR 7841 [SR–Philadep–95–08] (order granting partial temporary approval and partial permanent approval of a proposed rule change).

[3] The Commission has modified the text of the summaries submitted by Philadep.

[4] *Supra* note 2.

cause the participant to exceed its net debit cap) and will cause the delivery to pend in DTC's system. At the end of each processing day, DTC returns to Philadep delivery orders and payment orders that fail to successfully complete in DTC's system, and Philadep reverses the deliveries to the original delivering participants. Philadep's reversals are not subject to Receiver-Authorized Delivery (''RAD'') processing[5] or other risk management controls (*i.e.*, net debit cap and collateral monitor).

2. Participants Fund

Philadep Rule 4, governing the participants fund and the procedures regarding the participants fund formulas currently provide for an all cash participants fund. The all cash requirement applies to both the required deposit and any additional or voluntary deposits made by participants. Pursuant to Rule 4 and Philadep's procedures, Philadep calculates participants' required cash deposit pursuant to the following formulas.

(a) Inactive Accounts: $5,000.00[6]

(b) Specialized Services: (maximum $50,000 required with $100 or greater in average monthly billings for either Deposit or Transfer activity)

—Deposit Activity: $25,000.00 plus

—Transfer Activity: $25,000.00

(c) Participants not doing Specialized Service activity with service fees of $100 or greater in average monthly billings. The greater of either:

(1) $25,000, or;

(2) 1% of the average of the three highest net debits over the past three months (rounded to the next $5,000 increment).

Philadep recalculates each participant's deposit requirement at the end of each month based on a participant's activity over the previous three months. Philadep notifies its participants of any required deposit increases and the amount of such additional deposit within ten business days of the end of the month. Participants whose deposit requirements have decreased are notified at least quarterly although they may inquire and withdraw excess deposits monthly. Participants may leave excess cash deposits in the participants fund.

During the pendency of the temporary approval period, Philadep has more fully considered the risk profile of Philadep and its participants in an SDFS environment, including the adequacy of the participants fund formulas and the inter-depository delivery procedures. Philadep has provided material to the Commission to demonstrate the effectiveness of the risk management controls of the SDFS system in monitoring and reducing risk. The temporary approval period for the participants fund formulas and the inter-depository delivery procedures expires on August 31, 1996. Therefore, Philadep requests that the Commission permanently approve Philadep's SDFS program in its entirety.

Philadep believes the proposed rule change is consistent with Section 17A of the Act of the rules and regulations thereunder because the rule proposal fosters cooperation and coordination with persons engaged in the clearance and settlement of securities transactions and further assures the safeguarding of securities and funds in its custody or control or for which Philadep is responsible.

(B) Self-Regulatory Organization's Statement on Burden on Competition

Philadep does not believe that the proposed rule change will impact or impose a burden on competition.

(C) Self-Regulatory Organization's Statement on Comments on the Proposed Rule Change Received From Members, Participants, or Others

No written comments have been solicited or received.

III. Date of Effectiveness of the Proposed Rule Change and Timing for Commission Action

Section 17A(b)(3)(F) of the Act[7] requires that the rules of a clearing agency be designed to foster cooperation and coordination with persons engaged in the clearance and settlement of securities transactions and to assure the safeguarding of securities and funds which are in the custody or control of the clearing agency or for which it is responsible. The Commission believes that Philadep's proposed procedures relating to inter-depository deliveries are consistent with Philadep's obligations under Section 17A(b)(3)(F) to foster cooperation and coordination with persons engaged in the clearance and settlement of securities transactions because the proposed rule change establishes procedures for the processing of inter-depository deliveries between Philadep and DTC.

Because the Commission was concerned that the inter-depository delivery procedures could create the situation where an inter-depository reversal arising from an uncompleted delivery at DTC would cause a Philadep participant to violate its net debit cap at Philadep near the end of the day, the Commission previously approved Philadep's inter-depository delivery procedures on a temporary basis in order that the procedures and their effects could be carefully monitored and modified if needed before they were permanently approved. Philadep has reported that during the temporary approval period it did not experience any inter-depository reversals from DTC that caused a Philadep participant to violate its net debit cap. Additionally, during the month of July, Philadep experienced only one end-of-day inter-depository reversal. Therefore, the Commission is permanently approving Philadep's inter-depository delivery procedures. However, the Commission continues to encourage Philadep to examine and to consider future enhancements to the interface to provide a mechanism through which Philadep participants can receive real-time notification of transactions pending at DTC.[8] In this regard, Philadep must report to the Commission on a quarterly basis the number and extent of inter-depository reversals that caused Philadep participants to violate their net debit caps by $1 million or more.

At this time, the Commission believes that Philadep's proposed rule change relating to Philadep's participants fund formulas is consistent with Philadep's obligations under Section 17A(b)(3)(F) to assure the safeguarding of securities and funds in its custody or control because Philadep's participants fund formulas, in conjunction with Philadep's other risk management procedures (*i.e.*, net debit caps and collateral monitors), provide certain protections for Philadep and its participants from financial loss associated with member defaults and insolvencies. However, the Commission continues to have concerns about the adequacy of Philadep's participants fund formulas in providing a sufficient source of cash liquidity and the formulas' conformity with the standards set forth by the Division.[9] The

[5] RAD allows a participant to review and either approve or cancel incoming deliveries before they are processed in Philadep's system.

[6] Securities Exchange Release No. 37554 (August 9, 1996), 61 FR 42929 [File No SR–Philadep–96–07] (order granting temporary approval of proposed rule change to establish a separate participant category for inactive accounts through December 31, 1996).

[7] 15 U.S.C. 78q–1(b)(3)(F) (1988).

[8] Currently, a Philadep clerk will monitor transactions that are pending at DTC during the day and will inform Philadep participants of such pending transactions.

[9] Securities Exchange Act Release No. 16900 (June 17, 1980), 45 FR 41920 (order publishing standards to be used by the Division in reviewing the grant of full registration of clearing agencies).

Commission believes clearing agencies must establish an appropriate level of clearing fund contributions based on, among other things, its assessment of the risks to which it is subject. Under the proposed rule change, Philadep's participants fund formulas generally do not take into consideration to a participant's level of depositor activity. Instead, the formulas are based on the type of depository services used by the participant. As such, the Commission has concerns about whether the size of the participants fund will be sufficient. For these reasons, the Commission is temporarily approving the portion of the proposed rule change relating to the participants fund formulas through December 31, 1996. During the period of temporary approval, Philadep and the Commission will continue to monitor and to analyze the adequacy of Philadep's participants fund formulas.

Philadep has requested that the Commission find good cause for approving the proposed rule change prior to the thirtieth day after the date of publication of notice of filing. The Commission finds good cause for approving the proposed rule change prior to the thirtieth day after the date of publication of notice of filing because the proposed rule change will allow Philadep participants to continue to utilize the interface between Philadep and DTC. Accelerated approval of the proposal also will allow Philadep to continue to apply its participants fund formulas through December 31, 1996.

IV. Solicitation of Comments

Interested persons are invited to submit written data, views, and arguments concerning the foregoing. Persons making written submissions should file six copies thereof with the Secretary, Securities and Exchange Commission, 450 Fifth Street, N.W., Washington, D.C. 20549. Copies of the submission, all subsequent amendments, all written statements with respect to the proposed rule change that are filed with the Commission, and all written communications relating to the proposed rule change between the Commission and any person, other than those that may be withheld from the public in accordance with the provisions of 5 U.S.C. 552, will be available for inspection and copying in the Commission's Public Reference Room, 450 Fifth Street, N.W., Washington, D.C. 20549. Copies of such filing will also be available for inspection and copying at the principal office of Philadep. All submissions should refer to the file number SR–Philadep–96–14 and should be submitted by September 27, 1996.

It is therefore ordered, pursuant to Section 19(b)(2) of the Act, that the proposed rule change (File No. SR–Philadep–96–14) be, and hereby is, permanently approved for those sections of the proposed rule change relating to the inter-depository delivery procedures and temporarily approved through December 31, 1996, for those sections of the proposed rule change relating to Philadep's participants fund formulas.

For the Commission by the Division of Market Regulation, pursuant to delegated authority.[10]

Margaret H. McFarland,

Deputy Secretary.

[FR Doc. 96–22721 Filed 9–5–96; 8:45 am]

BILLING CODE 8010–01–M

[Release No. 34–37623; File Nos. SR–SCCP–96–07]

Self-Regulatory Organization; Stock Clearing Corporation of Philadelphia; Notice of Filing and Order Granting Accelerated Approval on a Temporary Basis of a Proposed Rule Change Seeking Permanent Approval of the Participants Fund Formulas

August 29, 1996.

Pursuant to Section 19(b)(1) of the Securities Exchange Act of 1934 (''Act''),[1] notice is hereby given that on August 20, 1996, the Stock Clearing Corporation of Philadelphia (''SCCP'') filed with the Securities and Exchange Commission (''Commission'') the proposed rule change (File No. SR–SCCP–96–07) as described in Items I and II below, which items have been prepared primarily by SCCP. The Commission is publishing this notice and order to solicit comments from interested persons and to grant accelerated approval of the proposed rule change through December 31, 1996.

I. Self-Regulatory Organization's Statement of the Terms of Substance of the Proposed Rule Change

The proposed rule change seeks permanent approval of SCCP's participants fund formulas. The Commission previously granted partial temporary approval to a proposed rule change establishing SCCP's participants fund formulas as part of the conversion of SCCP's money settlement system from a next-day funds settlement (''NDFS'') to a same-day funds settlement (''SDFS'') system.[2]

II. Self-Regulatory Organization's Statement of the Purpose of, and Statutory Basis for, the Proposed Rule Change

In its filing with the Commission, SCCP included statements concerning the purpose of and basis for the proposed rule change and discussed any comments that it received on the proposed rule change. The text of these statements may be examined at the places specified in Item IV below. SCCP has prepared summaries, set forth in sections (A), (B), and (C) below, of the most significant aspects of such statements.[3]

(A) Self-Regulatory Organization's Statement of the Purpose of, and Statutory Basis for, the Proposed Rule Change

On February 22, 1996, SCCP converted its processing environment from an NDFS system to an SDFS system. In an effort to reduce risk in an SDFS settlement environment, SCCP and the Philadelphia Depository Trust Company (''Philadep'') implemented a new system and new controls with enhanced processing capabilities. The Commission approved SCCP's SDFS system on a permanent basis for all aspects of the filling except the participants fund formulas.[4]

SCCP Rule 4, governing SCCP's participants fund, and the procedures regarding the participants fund formulas were amended to provide for an all cash participants fund. The all cash requirement applies to both the required deposit and any additional or voluntary deposits made by participants.

Particpants that choose to make voluntary deposits in most situations are able to increase their level of activity at SCCP and receive interest rebates from SCCP for deposits in excess of $50,000.

Pursuant to Rule 4 and SCCP's procedures, SCCP calculates participants' required cash deposits pursuant to the following formulas:

(a) Inactive Account: $5,000.[5]

---

[10] 17 CFR 200.30–3(a)(12) (1996).

[1] 15 U.S.C. 78s(b)(1) (1988).

[2] Securities Exchange Act Release No. 36875 (February 22, 1996), 61 FR 7846 [File No. SR–SCCP–95–06] (order granting partial temporary approval and partial permanent approval of a proposed rule change to convert the settlement system to a same-day funds settlement system).

[3] The Commission has modified the text of the summaries submitted by SCCP.

[4] *Supra* note 2.

[5] Securities Exchange Release No. 37554 (August 9, 1996), 61 FR 42929 [File No. SR–SCCP–96–03] (order granting temporary approval of a proposed

Continued

(b) Full Service (''CNS'') Account—The contribution of a CNS Participant is based upon the larger of: (1) the participant's monthly average of trading activity during the preceding three months, $1,000 for every twenty-five trading units of one hundred shares; or (2) the participant's aggregate dollar amount of all long trades at their execution price for the prior three months multiplied by two percent. The required contributions are rounded upward to $5,000 increments, and the average is a rolling average.

(c) Regional Interface Operations (''RIO'') Account—The contribution of a RIO Participant is based on the participant's monthly average of trading activity during the preceding three months, $1,000 for every twenty-five trading units of one hundred shares (with a $10,000 minimum and a $75,000 maximum contribution). The required contributions are rounded upward to $5,000 increments. RIO is defined as a participant account whereby the participant elects to settle with a clearing corporation other than SCCP.

(d) Layoff Account—The contribution of a Layoff Participant is set at a uniform rate of $25,000. A Layoff Participant is defined as a participant account whereby the participant elects to settle with a clearing corporation other than SCCP for trades not executed on the Philadelphia Stock Exchange.

(e) Specialist Margin Account—The contributions of a Specialist Margin Participant is set at a uniform rate of $35,000.

(f) Non-Specialist Margin Account—The contribution of a Non-Specialist Margin Participant is set at a uniform rate of $35,000.

SCCP recalculates each participants's participants fund deposit requirement at the end of each month based on the previous three months prior to the most recent month. SCCP notifies its participants of any required deposit increases and the amount of such additional deposit within ten business days of the end of the month. Participants whose deposit requirements decreased are notified at least quarterly although they may inquire and withdraw excess deposits monthly. Participants may leave excess cash deposits in the participants fund.

During the pendency of the temporary approval period, SCCP has more fully considered the adequacy of the participants fund formulas and the risk profile of SCCP and its participants in an SDFS environment. SCCP has provided material to the Commission to demonstrate the effectiveness of the risk management controls of the SDFS system in monitoring and reducing risk. The temporary approval period for the participants fund formulas expires on August 31, 1996. Therefore, SCCP requests that the Commission permanently approve SCCP's SDFS program in its entirety.

rule change to establish a separate participant category for inactive accounts through December 31, 1996).

SCCP believes the proposed rule change is consistent with Section 17A of the Act and the rules and regulations thereunder because the rule proposal assures the safeguarding of securities and funds in its custody or control or for which SCCP is responsible.

(B) Self-Regulatory Organization's Statement on Burden on Competition

SCCP does not believe that the proposed rule change will impose any inappropriate burden on competition.

(C) Self-Regulatory Organization's Statement on Comments on the Proposed Rule Change Received From Members, Participants, or Others

No written comments relating to the proposed rule change have been received. SCCP will notify the Commission of any written comments received by SCCP

III. Date of Effectiveness of the Proposed Rule Change and Timing for Commission Action

Section 17a(b)(3)(F) of the Act[6] requires that the rules of a clearing agency be designed to assure the safeguarding of securities and funds which are in the custody or control of the clearing agency or for which it is responsible. At this time, the Commission believes that SCCP's proposed rule change relating to the participants fund formulas is consistent with SCCP's obligations under Section 17A(b)(3)(F) to assure the safeguarding of securities and funds in its custody or control because SCCP's participants fund formulas, in conjunction with SCCP's other sources of liquidity (*i.e.*, lines of credit), provide certain protections for SCCP and its participants from financial loss associated with member defaults and insolvencies.

However, the Commission continues to have concerns about the adequacy of SCCP's participants fund formulas in providing a sufficient source of cash liquidity and the formulas' conformity with the standards set forth by the Division of Market Regulation (''Division'').[7] The Commission believes that clearing agencies operating SDFS systems must have sufficient liquidity from a combination of cash and lines of credit to ensure that settlement occurs at the end of the business day even if a participant fails to settle with the clearing agency or if the clearing agency experiences a systems problem. The Commission further believes that a clearing agency must have immediate access to an amount of cash which will enable the clearing agency to fund settlement for most participant failures or systems problems without having to immediately draw on its lines of credit (*i.e.*, a clearing agency's lines of credit should be its secondary source of liquidity and not its primary source). The Commission is concerned with the level of cash provided by SCCP's formulas and whether that level of cash liquidity is sufficient given the demand for liquidity under an SDFS environment and SCCP's use of the participants fund to finance specialist purchases.[8] For these reasons, the Commission is approving the proposed rule change through December 31, 1996. During the period of temporary approval, the Commission and SCCP will continue to monitor and to analyze the adequacy of SCCP's participants fund formulas.

SCCP has requested that the Commission find good cause for approving the proposed rule change prior to the thirtieth day after the date of publication of notice of filing. The Commission finds good cause for approving the proposed rule change prior to the thirtieth day after the date of publication of notice of filing because the proposed rule change will allow SCCP to continue to apply its participants fund formulas when the current temporary approval expires on August 31, 1996.

IV. Solicitation of Comments

Interested persons are invited to submit written data, views, and arguments concerning the foregoing. Persons making written submissions should file six copies thereof with the Secretary, Securities and Exchange Commission, 450 Fifth Street, N.W., Washington, D.C. 20549. Copies of the submission, all subsequent amendments, all written statements with respect to the proposed rule change that are filed with the Commission, and all written communications relating to the proposed rule change between the Commission and any person, other than those that may be withheld from the public in accordance with the provisions of 5 U.S.C. 552, will be available for inspection and copying in the Commission's Public Reference Room, 450 Fifth Street, N.W., Washington, D.C. 20549. Copies of such

[6] 15 U.S.C. 78q–1(b)(3)(F) (1988).

[7] Securities Exchange Act Release No. 16900 (June 17, 1980), 45 FR 41920 (order publishing standards to be used by the Division in reviewing the grant of full registration of clearing agencies).

[8] For a complete description of SCCP's financing program, refer to Securities Exchange Act Release No. 20221 (September 23, 1983), 48 FR 45167 (order approving full registration of SCCP, *et al.*).

filing will also be available for inspection and copying at the principal office of SCCP. All submissions should refer to the file number SR–SCCP–96–07 and should be submitted by September 27, 1996.

It is therefore ordered, pursuant to Section 19(b)(2) of the Act, that the proposed rule change (File No. SR–SCCP–96–07) be, and hereby is, temporarily approved through December 31, 1996.

For the Commission by the Division of Market Regulation, pursuant to delegated authority.[9]

Margaret H. McFarland,

Deputy Secretary.

[FR Doc. 96–22723 Filed 9–5–96; 8:45 am]

BILLING CODE 8010–01–M

DEPARTMENT OF STATE

[Public Notice No. 2436]

Fine Arts Committee; Notice of Meeting

The Fine Arts Committee of the Department of State will meet on Friday, October 4, 1996 at 11:00 a.m. at the Blair House. The meeting will last until approximately 12:00 p.m. and is open to the public.

The agenda for the committee meeting will include a summary of the work of the Fine Arts Office since its last meeting April 1996 and the announcement of gifts and loans of furnishings as well as financial contributions from January 1, 1996–September 1, 1996. Public access to the Blair House is strictly controlled. Members of the public wishing to take part in the meeting should telephone the Fine Arts Office by Friday, September 27, 1996, telephone (202) 647–1990 to make arrangements to enter the building. The public may take part in the discussion as long as time permits and at the discretion of the chairman.

Dated: August 24, 1996.

Gail F. Serfaty,

Vice Chairman, Fine Arts Committee.

[FR Doc. 96–22821 Filed 9–5–96; 8:45 am]

BILLING CODE 4710–38–M

[Public Notice No. 2435]

Shipping Coordinating Committee Subcommittee on Safety of Life at Sea Working Group on Dangerous Goods, Solid Cargoes and Containers; Notice of Meeting

The Working Group on Dangerous Goods, Solid Cargoes and Containers (DSC) of the Subcommittee on Safety of Life at Sea (SOLAS) will conduct an open meeting at 9:30 a.m. on September 17, 1996, in Room 6332, at the Department of Transportation, Nassif Building, 400 Seventh Street, S.W., Washington, DC 20590–0001. The purpose of the meeting is to discuss the outcome of the First Session of the DSC Subcommittee of the International Maritime Organization (IMO) which was held February 5–9, 1996, at the IMO Headquarters in London. In addition, initial plans and preparations for the Second Session (DSC2) and other topics of interest, will be addressed.

The agenda items of particular interest are:

a. Harmonization of the International Maritime Dangerous Goods (IMDG) Code with the UN Recommendations on the Transport of Dangerous Goods.

b. Amendment 28–96 of the IMDG Code.

c. Implementation of the IMDG Code.

d. Development of new glossary and illustrations of packagings for Annex I to the IMDG Code.

e. Amendments to the Emergency Procedures for Ships Carrying Dangerous Goods (EMS) and the Medical First Aid Guide for Use in Accidents Involving Dangerous Goods (MFAG).

f. Implementation of Annex III of the Marine Pollution Convention (MARPOL 73/78), as amended, and amendments to the IMDG Code to cover marine pollution aspects.

g. Reports on incidents involving dangerous goods or marine pollutants in packaged form on board ships or in port areas.

h. Evaluation of properties of solid bulk cargoes.

i. Amendments to the Code of Safe Practice for Solid for Solid Bulk Cargoes (BC Code).

j. Loading and unloading of bulk cargoes.

k. Development of measures complementary to the Irradiated Nuclear Fuel (INF) Code.

l. Stowage and securing of cargoes on offshore supply vessels.

m. Entry into enclosed spaces.

n. Amendments to SOLAS chapters VI and VII.

o. Guidelines for the development of shipboard emergency plans for marine pollutants.

p. Water level alarms in cargo holds.

q. Cargo securing manual.

r. Revision of the Recommendations on the Safe Use of Pesticides in Ships.

s. Offshore tank containers.

t. Ships' stores of a hazardous nature.

u. Review of open-top containership provisional requirements.

v. Risk analysis of on-deck stowage of dangerous goods and marine pollutants and recommendations for the revision of relevant IMDG Code stowage provisions.

w. Revision of the format of the IMDG Code.

x. Review of reporting requirements in IMO instruments.

y. Relations with other organizations.

Members of the public may attend this meeting up to the seating capacity of the room. Interested persons may seek information by writing: Mr. E.P. Pfersich, U.S. Coast Guard (G–MSO–3), 2100 Second Street, S.W., Washington, DC 20593–0001 or by calling (202) 267–1577.

Dated: August 23, 1996.

Russell A. LaMantia,

Chairman Shipping Coordinating Committee.

[FR Doc. 96–22822 Filed 9–5–96; 8:45 am]

BILLING CODE 4710–07–M

DEPARTMENT OF TRANSPORTATION

Federal Aviation Administration

RTCA, Inc., Special Committee 182; Minimum Operational Performance Standards (MOPS) for an Avionics Computer Resource (ACR)

Pursuant to section 10(a)(2) of the Federal Advisory Committee Act (Pub. L. 92–463, 5 U.S.C., Appendix 2), notice is hereby given for Special Committee 182 meeting to be held October 16–18, 1996, starting at 9:00, a.m. The meeting will be held at RTCA, Inc., 1140 Connecticut Avenue, N.W., Suite 1020, Washington, DC, 20036.

The agenda will include: (1) Chairman's Introductory Remarks; (2) Review and Approval of Meeting Agenda; (3) Review and Approval of Minutes from the Previous Meeting; (4) Reports from Related Industry meetings; (5) Review of MOPS Draft Version 0.3; (6) Discussion Paper, Level of Specification Detail in the ACR MOPS; (7) New Material for Draft Version 0.4 (Failure Modes and Hazard Analysis, Platform Scheduler Service, Classes of ACR Service); (8) Working Group Sessions (ACR Properties, ACR Services, ACR Capacity/Performance); (9) Working Group Reports; (10) Other Business; (11) Date and Place of Next Meeting.

Attendance is open to the interested public but limited to space availability. With the approval of the chairman, members of the public may present oral statements at the meeting. Persons wishing to present statements or obtain information should contact the RTCA Secretariat, 1140 Connecticut Avenue, N.W., Suite 1020, Washington, DC,

[9] 17 CFR 200.30–3(a)(12) (1996).

20036; (202) 833–9339 (phone) or (202) 833–9434 (fax). Members of the public may present a written statement to the committee at any time.

Issued in Washington, DC, on August 30, 1996.

Janice L. Peters,

Designated Official.

[FR Doc. 96–22834 Filed 9–5–96; 8:45 am]

BILLING CODE 4810–13–M

RTCA, Inc., Special Committee 172; Future Air-Ground Communications in the VHF Aeronautical Band (118–137 MHz)

Pursuant to section 10(a)(2) of the Federal Advisory Committee Act (Pub. L. 92–463, 5 U.S.C., Appendix 2), notice is hereby given for Special Committee 172 meeting to be held November 12–14, 1996, starting at 9:00 a.m. on November 12. The meeting will be held at RTCA, 1140 Connecticut Avenue, N.W., Suite 1020, Washington, DC, 20036.

The agenda will be as follows: Tuesday, November 12: (1) Plenary Convenes at 9:00 a.m. for 30 minutes; (2) Introductory Remarks; (3) Review and Approval of the Agenda; (4) Working Group (WG)–2, VHF Data Radio Signal-in-Space MASPS; Report on ICAO Activity; and Continue Refinement of Upper Layers. Wednesday, November 13: (5) WG–2 Continues; (6) WG–3, Review of Activities in VHF Digital Radio MOPS Document Activities. Thursday, November 14: (7) Plenary Reconvenes at 9:00 a.m.; (8) Review and Approval of the Minutes of the Previous Meeting; (9) Reports From WG's 2 & 3 Activities; (10) Reports on CSMA and VDL Validation and FAA Vocoder Activity; (11) Review Issues List and Address Future Work; (12) Other Business; (13) Date and Place of Next Meeting.

Attendance is open to the interested public limited to space availability. With the approval of the chairman, members of the public may present oral statements at the meeting.

Persons wishing to present statements or obtain information should contact the RTCA Secretariat, 1140 Connecticut Avenue, N.W., Suite 1020, Washington, DC 20036; (202) 833–9339 (phone) or (202) 833–9434 (fax). Members of the public may present a written statement to the committee at any time.

Issued in Washington, DC, on August 29, 1996.

Janice L. Peters,

Designated Official.

[FR Doc. 96–22835 Filed 9–5–96; 8:45 am]

BILLING CODE 4810–13–M

Notice of Intent To Rule on Application (#96–02–U–00–GCC) To Use the Revenue From a Passenger Facility Charge (PFC) at Gillette-Campbell County Airport, Submitted by the Gillette-Campbell County Airport, Gillette, WY

AGENCY: Federal Aviation Administration (FAA), DOT.

ACTION: Notice of intent to rule on application.

SUMMARY: The FAA proposes to rule and invites public comment on the application to use PFC revenue at Gillette-Campbell County Airport under the provisions of 49 U.S.C. 40117 and Part 158 of the Federal Aviation Regulations 914 CFR 158).

DATES: Comments must be received on or before October 7, 1996.

ADDRESSES: Comments on this application may be mailed or delivered in triplicate to the FAA at the following address: Alan E. Wiechmann, Manager, Denver Airports District Office, DEN–ADO, Federal Aviation Administration; 5440 Roslyn, Suite 300, Denver, CO 80216–6026.

In addition, one copy of any comments submitted to the FAA must be mailed or delivered to Mr. Jay Lundell, Airport Manager, at the following address: Gillette-Campbell County Airport, 2000 Airport Road #28, Gillette, WY 82716.

Air carriers and foreign air carriers may submit copies of written comments previously provided to Gillette-Campbell County Airport, under section 158.23 of Part 158.

FOR FURTHER INFORMATION CONTACT: Mr. Christopher Schaffer, (303) 286–5525, Denver Airports District Office, DEN–ADO; Federal Aviation Administration, 5440 Roslyn, Suite 300, Denver, CO 80216–6026. The application may be reviewed in person at this same location.

SUPPLEMENTARY INFORMATION: The FAA proposes to rule and invites public comment on the application (#96–02–U–00–GCC) to use PFC revenue at Gillette-Campbell County Airport, under the provisions of 49 U.S.C. 40117 and Part 158 of the Federal Aviation Regulations (14 CFR Part 158).

On August 28, 1996, the FAA determined that the application to use the revenue from a PFC submitted by the Gillette-Campbell County Airport, Gillette, Wyoming, was substantially complete within the requirements of section 158.25 of Part 158. The FAA will approve or disapprove the application, in whole or in part, no later than November 26, 1996.

The following is a brief overview of the application.

Level of the proposed PFC: $3.00.

Proposed charge effective date: September 1, 1996.

Proposed charge expiration date: April 1, 2002.

Total requested for use approval $369,132.00.

Brief description of proposed project: Terminal building; Airport layout plan update; Mandatory airport signage; Taxiway lighting system; and Snow removal equipment.

Class or classes of air carriers which the public agency has requested not be required to collect PFC's: Part 135 on demand air taxi operators. This exemption is consistent with the original Record of Decision issued June 23, 1993.

Any person may inspect the application in person at the FAA office listed above under **FOR FURTHER INFORMATION CONTACT** and at the FAA Regional Airports Office located at: Federal Aviation Administration, Northwest Mountain Region, Airports Division, ANM–600, 1601 Lind Avenue S.W., Suite 540, Renton, WA 98055–4056.

In addition, any person may, upon request, inspect the appplication, notice and other documents germane to the application in person at the Gillette-Campbell County Airport.

Issued in Renton, Washington on August 28, 1996.

David A. Field,

Manager, Planning, Programming and Capacity Branch, Northwest Mountain Region.

[FR Doc. 96–22838 Filed 9–5–96; 8:45 am]

BILLING CODE 4910–13–M

Notice of Intent To Rule on Application To Impose and Use the Revenue From a Passenger Facility Charge (PFC) at Long Island MacArthur Airport, Islip, NY

AGENCY: Federal Aviation Administration (FAA), DOT.

ACTION: Notice of intent to rule on application.

SUMMARY: The FAA proposes to rule and invites public comment on the application to impose and use the revenue from a PFC at Long Island MacArthur Airport under the provisions of the Aviation Safety and Capacity Expansion Act of 1990 (Title IX of the Omnibus Budget Reconciliation Act of 1990) (Public Law 101–508) and Part 158 of the Federal Aviation Regulations (14 CFR Part 158).

DATES: Comments must be received on or before October 7, 1996.

ADDRESSES: Comments on this application may be mailed or delivered in triplicate to the FAA at the following address: Philip Brito, Manager, New York Airports District Office, 600 Old Country Road, Room 446, Garden City, New York, 11530.

In addition, one copy of any comments submitted to the FAA must be mailed or delivered to Mr. Alfred E. Werner, Airport Manger for the Town of Islip at the following address: 100 Arrival, Ronkonkoma, New York 11779.

Air carriers and foreign air carriers may submit copies of written comments previously provided to the Town of Islip under section 158.23 of Part 158.

FOR FURTHER INFORMATION CONTACT: Philip Brito, Manager, New York Airports District Office, 600 Old Country Road, Room 446, Garden City, New York, 11530 (Tel 516–227–3803). The application may be reviewed in person at this same location.

SUPPLEMENTARY INFORMATION: The FAA proposes to rule and invites public comment on the application to use the revenue from a PFC at Long Island MacArthur Airport under the provisions of the Aviation Safety and Capacity Expansion Act of 1990 (Title IX of the Omnibus Budget Reconciliation Act of 1990) (Public Law 101–508) and Part 158 of the Federal Aviation Regulations (14 CFR Part 158).

On August 20, 1996, the FAA determined that the application to impose and use the revenue from a PFC submitted by the Town of Islip was substantially complete within the requirements of section 158.25 of Part 158. The FAA will approve or disapprove the application, in whole or in part, no later than November 29, 1996.

The following is a brief overview of the application:

Level of the proposed PFC: $3.00.

Proposed charge effective date: January 1, 2006.

Proposed charge expiration date: September 1, 2006.

Total estimated PFC revenue: $20,618,823.

Brief description of proposed projects:

—Overlay and Repair Runway 33L
—Terminal Roadway Realignment
—Purchase Two Snow Blowers
—Reimbursement for the Purchase of One Snow Blower
—Feasibility Study for an ARFF Training Facility
—Expansion of the Snow Removal Storage Building
—Obstruction Removal
—Asphalt Transient Apron
—Maintenance Vehicle Storage Building.

Class or classes of air carriers which the public agency has requested not be required to collect PFCs: Air Taxi/Commercial Operator Filing FAA form 1800–31

Any person may inspect the application in person at the FAA office listed above under **FOR FURTHER INFORMATION CONTACT** and at the FAA regional Airports office located at: Fitzgerald Federal Building, John F. Kennedy International Airport, Jamaica, New York, 11430.

In addition, any person may, upon request, inspect the application, notice and other documents germane to the application in person at the Port Authority of New York & New Jersey.

Issued in Jamaica, New York state on August 30, 1996.

Thomas Felix,

Acting Manager, Planning & Programming Branch.

[FR Doc. 96–22832 Filed 9–5–96; 8:45 am]

BILLING CODE 4910–13–M

Surface Transportation Board [1]

[STB Finance Docket No. 33017]

Chicago Rail Link, L.L.C.—Corporate Family Transaction Exemption—Chicago, West Pullman & Southern Railroad, L.L.C.

Chicago Rail Link, L.L.C., (CRL), and Chicago, West Pullman & Southern Railroad, L.L.C. (CWP), both Class III railroads, have jointly filed a verified notice of exemption. The exempt transaction is a merger of CWP into CRL.[2]

The transaction was expected to be consummated on or after the August 15, 1996 effective date of the exemption.

The proposed merger will enhance operating economies, improve service, simplify the corporate structure, and improve the financial viability of the surviving corporation by eliminating costs associated with separate accounting, tax, bookkeeping and reporting functions.

This is a transaction within a corporate family of the type specifically exempted from prior review and approval under 49 CFR 1180.2(d)(3). The parties state that the transaction will not result in adverse changes in service levels, significant operational changes, or a change in the competitive balance with carriers outside the corporate family.

Under 49 U.S.C. 10502(g), the Board may not use its exemption authority to relieve a rail carrier of its statutory obligation to protect the interests of its employees. Section 11326(c), however, does not provide for labor protection for transactions under sections 11324 and 11325 that involve only Class III rail carriers. Because this transaction involves Class III rail carriers only, the Board, under the statute, may not impose labor protective conditions for this transaction.

If the verified notice contains false or misleading information, the exemption is void *ab initio.* Petitions to reopen the proceeding to revoke the exemption under 49 U.S.C. 10502(d) may be filed at any time. The filing of a petition to revoke will not automatically stay the transaction.

An original and 10 copies of all pleadings, referring to STB Finance Docket No. 33017, must be filed with the Surface Transportation Board, Office of the Secretary, Case Control Branch, 1201 Constitution Avenue, N.W., Washington, DC 20423. In addition, a copy of each pleading must be served on Karl Morell, Esq., Ball Janik LLP, 1455 F Street, N.W., Suite 225, Washington, DC 20005.

Decided: August 29, 1996.

By the Board, David M. Konschnik, Director, Office of Proceedings.

Vernon A. Williams,

Secretary.

[FR Doc. 96–22782 Filed 9–5–96; 8:45 am]

BILLING CODE 4915–00–P

---

[1] The ICC Termination Act of 1995, Pub. L. No. 104–88, 109 Stat. 803, which was enacted on December 29, 1995, and took effect on January 1, 1996, abolished the Interstate Commerce Commission and transferred certain functions to the Surface Transportation Board (Board). This notice relates to functions that are subject to Board jurisdiction pursuant to 49 U.S.C. 11323–24.

[2] CRL and CWP are wholly owned subsidiaries of OmniTRAX, Inc., a noncarrier holding company.

[STB Finance Docket No. 33043]

CSX Transportation, Inc.—Trackage Rights Exemption—Paducah & Louisville Railway, Inc.

Paducah & Louisville Railway, Inc. (P&L), a Class III railroad, has agreed to grant overhead trackage rights to CSX Transportation, Inc. (CSXT), a Class I railroad, over its trackage beginning west of Madisonville, KY, at P&L milepost 146, and extending eastwardly to just east of Central City, KY, at P&L milepost 122, a total distance of approximately 24 miles of rail line in Hopkins and Muhlenberg Counties, KY.

---

[1] The ICC Termination Act of 1995, Pub. L. No. 104–88, 109 Stat. 803, which was enacted on December 29, 1995, and took effect on January 1, 1996, abolished the Interstate Commerce Commission and transferred certain functions to the Surface Transportation Board (Board). This notice relates to functions that are subject to Board jurisdiction pursuant to 49 U.S.C. 11323–24.

The transaction is scheduled to be consummated on September 2, 1996.

The trackage rights will enable CSXT to rationalize excess facilities in its underutilized 18-mile line of railroad between Madisonville and Moorman, KY, which runs north of and parallel to the P&L line.

As a condition to this exemption, any employees affected by the trackage rights will be protected by the conditions imposed in *Norfolk and Western Ry. Co.—Trackage Rights—BN*, 354 I.C.C. 605 (1978), as modified in *Mendocino Coast Ry., Inc.—Lease and Operate*, 360 I.C.C. 653 (1980).

This notice is filed under 49 CFR 1180.2(d)(7). If it contains false or misleading information, the exemption is void *ab initio*. Petitions to revoke the exemption under 49 U.S.C. 10502(d) may be filed at any time. The filing of a petition to revoke will not automatically stay the transaction.

An original and 10 copies of all pleadings, referring to STB Finance Docket No. 33043, must be filed with the Surface Transportation Board, Office of the Secretary, Case Control Branch, 1201 Constitution Avenue, N.W., Washington, DC 20423. In addition, a copy of each pleading must be served on Charles M. Rosenberger, Esq., CSX Transportation, Inc., 500 Water Street, J–150, Jacksonville, FL 32202.

Decided: August 29, 1996.

By the Board, David M. Konschnik, Director, Office of Proceedings.

Vernon A. Williams,

Secretary.

[FR Doc. 96–22783 Filed 9–5–96; 8:45 am]

BILLING CODE 4915–00–P

DEPARTMENT OF THE TREASURY

Internal Revenue Service

Proposed Collection; Comment Request for 941 TeleFile

AGENCY: Internal Revenue Service (IRS), Treasury.

ACTION: Notice and request for comments.

SUMMARY: The Department of the Treasury, as part of its continuing effort to reduce paperwork and respondent burden, invites the general public and other Federal agencies to take this opportunity to comment on proposed and/or continuing information collections, as required by the Paperwork Reduction Act of 1995, Public Law 104–13 (44 U.S.C. 3506(c)(2)(A)). Currently, the IRS is soliciting comments concerning 941 TeleFile, Employer's Quarterly Federal Tax Return.

DATES: Written comments should be received on or before November 5, 1996 to be assured of consideration.

ADDRESSES: Direct all written comments to Garrick R. Shear, Internal Revenue Service, room 5571, 1111 Constitution Avenue NW., Washington, DC 20224.

FOR FURTHER INFORMATION CONTACT: Requests for additional information or copies of the form and instructions should be directed to Martha R. Brinson, (202) 622–3869, Internal Revenue Service, room 5571, 1111 Constitution Avenue NW., Washington, DC 20224.

SUPPLEMENTARY INFORMATION:

Title: Employer's Quarterly Federal Tax Return

OMB Number: To be assigned later.

Form Number: 941 TeleFile.

Abstract: 941 TeleFile is used by employers to report by telephone payments made to employees subject to income and social security/Medicare taxes and the amounts of these taxes. It may be used instead of filing Form 941. In 1997, 941 TeleFile will be available on a test basis for a limited number of taxpayers.

Current Actions: This is a new collection of information.

Type of Review: New OMB approval.

Affected Public: Business or other for-profit organizations, not-for-profit institutions, and state, local, or tribal governments.

Estimated Number of Respondents: 68,480.

Estimated Time Per Respondent: 17 hr., 22 min.

Estimated Total Annual Burden Hours: 1,188,813.

The following paragraph applies to all of the collections of information covered by this notice:

An agency may not conduct or sponsor, and a person is not required to respond to, a collection of information unless the collection of information displays a valid OMB control number. Books or records relating to a collection of information must be retained as long as their contents may become material in the administration of any internal revenue law. Generally, tax returns and tax return information are confidential, as required by 26 U.S.C. 6103.

REQUEST FOR COMMENTS: Comments submitted in response to this notice will be summarized and/or included in the request for OMB approval. All comments will become a matter of public record. Comments are invited on: (a) Whether the collection of information is necessary for the proper performance of the functions of the agency, including whether the information shall have practical utility; (b) the accuracy of the agency's estimate of the burden of the collection of information; (c) ways to enhance the quality, utility, and clarity of the information to be collected; (d) ways to minimize the burden of the collection of information on respondents, including through the use of automated collection techniques or other forms of information technology; and (e) estimates of capital or start-up costs and costs of operation, maintenance, and purchase of services to provide information.

Approved: September 3, 1996.

Garrick R. Shear,

IRS Reports Clearance Officer.

[FR Doc. 96–22829 Filed 9–5–96; 8:45 am]

BILLING CODE 4830–01–U

Proposed Collection; Comment Request for Form 4361

AGENCY: Internal Revenue Service (IRS), Treasury.

ACTION: Notice and request for comments.

SUMMARY: The Department of the Treasury, as part of its continuing effort to reduce paperwork and respondent burden, invites the general public and other Federal agencies to take this opportunity to comment on proposed and/or continuing information collections, as required by the Paperwork Reduction Act of 1995, Public Law 104–13 (44 U.S.C. 3506(c)(2)(A)). Currently, the IRS is soliciting comments concerning Form 4361, Application for Exemption From Self-Employment Tax for Use by Ministers, Members of Religious Orders and Christian Science Practitioners.

DATES: Written comments should be received on or before November 5, 1996 to be assured of consideration.

ADDRESSES: Direct all written comments to Garrick R. Shear, Internal Revenue Service, room 5571, 1111 Constitution Avenue NW., Washington, DC 20224.

FOR FURTHER INFORMATION CONTACT: Requests for additional information or copies of the form and instructions should be directed to Martha R. Brinson, (202) 622–3869, Internal Revenue Service, room 5571, 1111 Constitution Avenue NW., Washington, DC 20224.

SUPPLEMENTARY INFORMATION:

Title: Application for Exemption From Self-Employment Tax for Use by Ministers, Members of Religious Orders and Christian Science Practitioners.

OMB Number: 1545–0168.

Form Number: Form 4361.

Abstract: Form 4361 is used by ministers, members of religious orders, or Christian Science Practitioners to file for an exemption from self-employment tax on certain earnings and to certify that they have informed the church or order that they are opposed to the acceptance of certain public insurance benefits.

Current Actions: There are no changes being made to this form.

Type of Review: Extension of a currently approved collection.

Affected Public: Individuals.

Estimated Number of Respondents: 10,270.

Estimated Time Per Respondent: 59 min.

Estimated Total Annual Burden Hours: 10,065.

The following paragraph applies to all of the collections of information covered by this notice:

An agency may not conduct or sponsor, and a person is not required to respond to, a collection of information unless the collection of information displays a valid OMB control number. Books or records relating to a collection of information must be retained as long as their contents may become material in the administration of any internal revenue law. Generally, tax returns and tax return information are confidential, as required by 26 U.S.C. 6103.

REQUEST FOR COMMENTS: Comments submitted in response to this notice will be summarized and/or included in the request for OMB approval. All comments will become a matter of public record. Comments are invited on: (a) Whether the collection of information is necessary for the proper performance of the functions of the agency, including whether the information shall have practical utility; (b) the accuracy of the agency's estimate of the burden of the collection of information; (c) ways to enhance the quality, utility, and clarity of the information to be collected; (d) ways to minimize the burden of the collection of information on respondents, including through the use of automated collection techniques or other forms of information technology; and (e) estimates of capital or start-up costs and costs of operation, maintenance, and purchase of services to provide information.

Approved: August 28, 1996.

Garrick R. Shear,

IRS Reports Clearance Officer.

[FR Doc. 96–22830 Filed 9–5–96; 8:45 am]

BILLING CODE 4830–01–U

Proposed Collection; Comment Request for Form 8621

AGENCY: Internal Revenue Service (IRS), Treasury.

ACTION: Notice and request for comments.

SUMMARY: The Department of the Treasury, as part of its continuing effort to reduce paperwork and respondent burden, invites the general public and other Federal agencies to take this opportunity to comment on proposed and/or continuing information collections, as required by the Paperwork Reduction Act of 1995, Public Law 104–13 (44 U.S.C. 3506(c)(2)(A)). Currently, the IRS is soliciting comments concerning Form 8621, Return by a Shareholder of a Passive Foreign Investment Company or Qualified Electing Fund.

DATES: Written comments should be received on or before November 5, 1996 to be assured of consideration.

ADDRESSES: Direct all written comments to Garrick R. Shear, Internal Revenue Service, room 5571, 1111 Constitution Avenue NW., Washington, DC 20224.

FOR FURTHER INFORMATION CONTACT: Requests for additional information or copies of the form and instructions should be directed to Martha R. Brinson, (202) 622–3869, Internal Revenue Service, room 5571, 1111 Constitution Avenue NW., Washington, DC 20224.

SUPPLEMENTARY INFORMATION:

Title: Return by a Shareholder of a Passive Foreign Investment Company or Qualified Electing Fund.

OMB Number: 1545–1002.

Form Number: Form 8621.

Abstract: Form 8621 is filed by a U.S. shareholder who owns stock in a foreign investment company. The form is used to report income, make an election to extend the time for payment of tax, and to pay an additional tax and interest amount. The IRS uses Form 8621 to determine if these shareholders have correctly reported amounts of income, made the election correctly, and have correctly computed the additional tax and interest amount.

Current Actions: There are no changes being made to this form.

Type of Review: Extension of a currently approved collection.

Affected Public: Business or other for-profit organizations and individuals.

Estimated Number of Respondents: 2,000.

Estimated Time Per Respondent: 19 hr., 43 min.

Estimated Total Annual Burden Hours: 39,420.

The following paragraph applies to all of the collections of information covered by this notice:

An agency may not conduct or sponsor, and a person is not required to respond to, a collection of information unless the collection of information displays a valid OMB control number. Books or records relating to a collection of information must be retained as long as their contents may become material in the administration of any internal revenue law. Generally, tax returns and tax return information are confidential, as required by 26 U.S.C. 6103.

REQUEST FOR COMMENTS: Comments submitted in response to this notice will be summarized and/or included in the request for OMB approval. All comments will become a matter of public record. Comments are invited on: (a) Whether the collection of information is necessary for the proper performance of the functions of the agency, including whether the information shall have practical utility; (b) the accuracy of the agency's estimate of the burden of the collection of information; (c) ways to enhance the quality, utility, and clarity of the information to be collected; (d) ways to minimize the burden of the collection of information on respondents, including through the use of automated collection techniques or other forms of information technology; and (e) estimates of capital or start-up costs and costs of operation, maintenance, and purchase of services to provide information.

Approved: August 28, 1996.

Garrick R. Shear,

IRS Reports Clearance Officer.

[FR Doc. 96–22831 Filed 9–5–96; 8:45 am]

BILLING CODE 4830–01–U

[Delegation Order No. 155 (Rev. 4)]

Delegation of Authority

AGENCY: Internal Revenue Service, Treasury.

ACTION: Delegation of authority.

SUMMARY: This delegation order is revised to give authority to sign recommendation letters for nonsuit settlements to the Regional Counsel and District Counsel in the field and to the Deputy Associate Chief Counsel and Assistant Chief Counsel in the National Office. In addition, it has been expanded in scope to cover nonrefund matters. The text of the delegation order appears below.

EFFECTIVE DATE: August 15, 1996.

FOR FURTHER INFORMATION CONTACT: Sara M. Coe, CC:DOM:FS:PROC, Room 4135,

1111 Constitution Avenue, NW, Washington, DC 20224, (202) 622–7940 (not a toll-free call).

Recommendation Letters to the Department of Justice Concerning Settlement Offers Covering Persons or Periods Not in Suit

Authority: For matters under their respective jurisdictions, to sign recommendation letters to the Department of Justice concerning Settlement Offers *related* to pending refund cases or any other cases or matters referred to the Department of Justice for prosecution or defense with respect to persons or periods not in suit.

Delegated to: Chief Counsel, Associate Chief Counsel, Deputy Associate Chief Counsel.

Authority: For matters under their respective jurisdictions, to sign recommendation letters concerning Settlement Offers *related* to pending refund cases or any other cases or matters referred to the Department of Justice for prosecution or defense with respect to: (a) periods not in suit ending prior to the date of the resulting settlement agreement; (b) tax consequences for periods not in suit ending after the date of the settlement agreement that necessarily result from the settlement of the periods in suit; (c) issues conceded in full by the taxpayer for periods not in suit ending after the date of the settlement agreement; (d) persons not in suit for the periods described in (a); and (e) persons not in suit for the items described in (b) and (c).

Delegated to: Regional Counsel, District Counsel, Assistant Chief Counsel.

In exercising both of the above authorities, the advice of the Chief of Appeals and/or District Director with jurisdiction over the nonsuit persons or periods should be obtained and considered.

Redelegation: The authority delegated herein may not be redelegated.

Sources of Authority: 26 CFR 301.7122–1, 26 CFR 301.7701–9. To the extent that authority previously exercised consistent with this order may require ratification, it is hereby approved and ratified. This order supersedes Delegation Order No. 155 (Rev. 3), effective October 1, 1991.

Dated: August 15, 1996.

Michael P. Dolan,

Deputy Commissioner.

[FR Doc. 96–22774 Filed 9–5–96; 8:45 am]

BILLING CODE 4830–01–P

Office of Thrift Supervision

Submission for OMB Review; Comment Request

August 29, 1996.

The Office of Thrift Supervision (OTS) has submitted the following public information collection requirement(s) to OMB for review and clearance under the Paperwork Reduction Act of 1995, Public Law 104–13. Copies of the submission(s) may be obtained by calling the OTS Clearance Officer listed. Comments regarding this information collection should be addressed to the OMB reviewer listed and to the OTS Clearance Officer, Office of Thrift Supervision, 1700 G Street, N. W., Washington, D.C. 20552.

OMB Number: 1550–0081.

Form Number: Not Applicable.

Type of Review: Extension of an approved collection.

Title: Release of Unpublished OTS Information.

Description: This rule provides an orderly mechanism for expeditious processing of requests from the public (including litigants in lawsuits where OTS is not a party) for non-public or confidential OTS information (documents and testimony), while preserving OTS' need to maintain the confidentiality of such information.

Respondents: For Profit and Not-for-Profit Organizations and Individuals,

Estimated Number of Respondents: 103.

Estimated Burden Hours Per Response: 5.

Frequency of Response: Once per lawsuit.

Estimated Total Reporting Burden: 2,500.

Clearance Officer: Colleen M. Devine, (202) 906–6025, Office of Thrift Supervision, 1700 Street, N. W., Washington, D.C. 20552.

OMB Reviewer: Alexander Hunt, (202) 395–7860, Office of Management and Budget, Room 10226, New Executive Office Building, Washington, D.C. 20503.

Catherine C.M. Teti,

Director, Records Management and Information Policy.

[FR Doc. 96–22715 Filed 9–5–96; 8:45 am]

BILLING CODE 6720–01–P

UNITED STATES INSTITUTE OF PEACE

Sunshine Act Meeting

AGENCY: United States Institute of Peace.

DATE/TIME: Thursday, September 19, 1996; 9:00 a.m.–5:30 p.m.

LOCATION: 1550 M Street, NW., M Street Lobby Conference Room, Washington, DC 20005.

STATUS: Open Session—Portions may be closed pursuant to Subsection (c) of Section 552(b) of Title 5, United States Code, as provided in subsection 1706(h)(3) of the United States Institute of Peace Act, Public Law 98–525.

AGENDA: September Board Meeting; Approval of Minutes of the Seventy-sixth Meeting of the Board of Directors; Chairman's Report; President's Report; Committee Reports; Review of Grants and Fellowships; FY 1997–1998 Budget Review; Other General Issues

CONTACT: Dr. Sheryl Brown, Director, Office of Communications, Telephone: (202) 457–1700.

Dated: September 3, 1996.

Charles E. Nelson,

Vice President for Management and Finance, United States Institute of Peace.

[FR Doc. 96–22881 Filed 9–3–96; 4:25 pm]

BILLING CODE 6820–AR–M

DEPARTMENT OF VETERANS AFFAIRS

Agency Information Collection Activities: Proposed Collections; Comment Request

AGENCY: Veterans Benefits Administration, Department of Veterans Affairs.

ACTION: Notice.

SUMMARY: As part of its continuing effort to reduce paperwork and respondent burden, the Veterans Benefits Administration (VBA) invites the general public and other Federal agencies to comment on these information collections. This request for comments is being made pursuant to the Paperwork Reduction Act of 1995 (Public Law 104–13; 44 U.S.C. 3506(c)(2)(A)). Comments should address the accuracy of the burden estimates and ways to minimize the burden including the use of automated collection techniques or the use of other forms of information technology, as well as other relevant aspects of the information collection.

DATES: Written comments and recommendations on the proposals for the collection of information should be received by no later than November 5, 1996.

ADDRESSES: Direct all written comments to Nancy J. Kessinger, Veterans Benefits Administration (20M30), Department of Veterans Affairs, 810 Vermont Avenue, NW, Washington, DC 20420. All comments will become a matter of public record and will be summarized in the VBA request for Office of Management and Budget (OMB) approval. In this document the VBA is soliciting comments concerning the following information collections:

OMB Control Number: None assigned.

Title and Form Number: State Application for Interment Allowance Under 38 U.S.C., Chapter 23, VA Form 21–530a.

Type of Review: New collection.

Need and Uses: The information is requested under the authority of Title 38 U.S.C., 2303, which authorizes payment to a State of $150 as a plot or internment allowance for the burial of an eligible veteran in a cemetery owed by that State and used solely for the interment of persons eligible for burial in a national cemetery.

Current Actions: Title 38 U.S.C., 2304, requires that applications for payment must be made within 2 years of the burial of the veteran. The use of VA Form 21–530a will allow the State to consolidate applications for submission for payment. This information will reduce the processing time and ensure payment to the State in a more timely manner. VA Form 21–531a will be used to gather information from a State that is seeking payment of benefits for plot-interment allowances. This information is necessary for payment of the allowance.

Affected Public: State, Local or Tribal Government.

Estimated Annual Burden: 20,000 hours.

Estimated Average Burden Per Respondent: 30 minutes.

Frequency of Response: On occasion.

Estimated Number of Respondents: 40,000.

OMB Control Number: 2900–0104.

Title and Form Number: Report of Accidental Injury in Support of Claim for Compensation or Benefits, VA Form 21–4176.

Type of Review: Extension of a currently approved collection.

Need and Uses: The form is used in support of claims for disability benefits based on disability which is the result of an accident. The information given by the veteran is used as a source to gather specific data regarding the accident and to afford the veteran an opportunity to provide information from his or her own knowledge regarding the accident.

Current Actions: The VA gathers the information to comply with Title 38 U.S.C., 105, 1110, 1131, and 1521a, which provide basic requirements for line of duty and misconduct determinations. Benefits may be paid if a disability is incurred in line of duty and is not the result of the veteran's own willful misconduct under 38 CFR 3.301.

Affected Public: Individuals or households.

Estimated Annual Burden: 2,200 hours.

Estimated Average Burden Per Respondent: 30 minutes.

Frequency of Response: On occasion.

Estimated Number of Respondents: 4,400.

OMB Control Number: 2900–0198.

Title and Form Number: Application for Annual Clothing Allowance, VA Form 21–8678.

Type of Review: Extension of a currently approved collection.

Need and Uses: The form is used to gather the necessary information to determine if the veteran has established entitlement to a clothing allowance payment.

Current Actions: The information is requested under the authority of Title 38 U.S.C., 1162, which provides a clothing allowance to a veteran who has service connected disability that causes him or her to wear or use a prosthetic or orthopedic appliance which tends to wear out or tear clothing. 38 CFR 3.810 grants entitlement to the clothing allowance upon application by the veteran.

Affected Public: Individuals or households.

Estimated Annual Burden: 1,120 hours.

Estimated Average Burden Per Respondent: 10 minutes.

Frequency of Response: On occasion.

Estimated Number of Respondents: 6,720.

OMB Control Number: 2900–0379.

Title and Form Number: Work-Study Time Record (Student Services), VA Form 22–8690.

Type of Review: Extension of a currently approved collection.

Need and Uses: The information is used to ensure that the amount of benefits payable to the student who is pursuing work-study is correct. Without the information, the VBA would not have a basis upon which to make payment.

Current Actions: The VA has authority to pay work study allowance to veterans, reservists, and qualified dependents under Chapters 30, 32, and 25, Title 38 U.S.C., Chapter 1606, Title 10 U.S.C. Benefits are payable after completion of 50 hours of service after the initial advance payment is made (100 hours). VA Form 22–8690 serves as the report of hours completed.

Affected Public: State, Local or Tribal Government; Individuals or households; Business or other for-profit; Not-for-profit institutions.

Estimated Annual Burden: 12,975 hours.

Estimated Average Burden Per Respondent: 15 minutes.

Frequency of Response: On occasion.

Estimated Number of Respondents: 51,900.

OMB Control Number: 2900–0399.

Title and Form Number: Student Beneficiary Report - REPS, VA Form 21–8938.

Type of Review: Extension of a currently approved collection.

Need and Uses: The form is used to verify that an individual who is receiving the REPS (Restored Entitlement Program for Survivors) benefits based on schoolchild status is in fact enrolled full-time in an approved school and is otherwise eligible for continued benefits. The form is released each March and sent to all student beneficiaries. If the form were not used, payments would continue to be made to ineligible payees and substantial overpayments would result.

Current Actions: The program pays VA benefits to certain surviving spouses and children of veterans who died in service prior to August 13, 1981, or who died as a result of a service-connected disability incurred or aggravated prior to August 13, 1981. Child beneficiaries must be enrolled full-time in an approved post-secondary school.

Affected Public: Individuals or households.

Estimated Annual Burden: 1,767 hours.

Estimated Average Burden Per Respondent: 20 minutes.

Frequency of Response: Annually.

Estimated Number of Respondents: 5,300.

OMB Control Number: 2900–0460.

Title and Form Number: Request for Verification of Employment, VA Form 26–8497.

Type of Review: Extension of a currently approved collection.

Need and Uses: The form is used by lenders to verify a loan applicant's income and employment information when making guaranteed and insured loans. The VA, however, does not require the exclusive use of VA Form 26–8497 for verification purposes; any comprehensible form of independent verification would be acceptable, provided all information presently shown on VA Form 26–8497 is provided. VA Form 26–8497 is also used in processing direct loan cases, offers on acquired properties, and release of liability/substitution of entitlement cases when needed.

Current Actions: The VA collects data necessary for compliance with the requirements of Title 38 U.S.C. 3710(b)(2) and (3). These requirements prohibit the VA from guarantying or making any loan unless the contemplated terms of payment required in the mortgage, to be

given in part payment of the purchase price or the construction cost, bear a proper relation to the veteran's present and anticipated income and expenses and that the veteran is a satisfactory credit risk.

Affected Public: Business or other for-profit.

Estimated Annual Burden: 58,750 hours.

Estimated Average Burden Per Respondent: 15 minutes.

Frequency of Response: On occasion

Estimated Number of Respondents: 235,000.

FOR FURTHER INFORMATION CONTACT: Requests for additional information or copies of the formd should be directed to Department of Veterans Affairs, Attn: Jacquie McCray, Information Management Service (045A4), 810 Vermont Avenue, NW, Washington, DC 20420, Telephone (202) 273–8032 or FAX (202) 273–5981.

Dated: August 22, 1996.

By direction of the Secretary.

Donald L. Neilson,

Director, Information Management Service.

[FR Doc. 96–22749 Filed 9–5–96; 8:45 am]

BILLING CODE 8320–01–P

Agency Information Collection Activities: Proposed Collection; Comment Request

AGENCY: National Cemetery System, Department of Veterans Affairs.

ACTION: Notice.

SUMMARY: As part of its continuing effort to reduce paperwork and respondent burden, the National Cemetery System (NCS) invites the general public and other Federal agencies to comment on this information collection. This request for comment is being made pursuant to the Paperwork Reduction Act of 1995 (Public Law 104–13; 44 U.S.C. 3506(c)(2)(A)). Comments should address the accuracy of the burden estimates and ways to minimize the burden including the use of automated collection techniques or the use of other forms of information technology, as well as other relevant aspects of the information collection.

DATES: Written comments and recommendations on the proposal for the collection of information should be received on or before November 5, 1996.

ADDRESSES: Direct all written comments to Frances Willis, National Cemetery System (402D), Department of Veterans Affairs, 810 Vermont Avenue, NW, Washington, DC 20420. All comments will become a matter of public record and will be summarized in the NCS request for Office of Management and Budget (OMB) approval. In this document the NCS is soliciting comments concerning the following information collection:

OMB Control Number: None assigned.

Title: PMC (Presidential Memorial Certificate) Insert.

Type of Review: New collection.

Need and Uses: The PMC Insert will be used by the recipient to notify the NCS if the original certificate contains an error, or arrives in an unacceptable condition, or to request additional certificates for other family members. The information will be used by the NCS to promptly reissue or provide additional certificates.

Current Actions: The PMC Program was initiated in March 1962 by President John F. Kennedy to honor the memory of honorably discharged deceased veterans. The program has been continued by all subsequent Presidents. A PMC is mailed to relatives and friends to honor the deceased veteran's military service to the Nation. In most cases involving recent deaths, the local VA regional office originates the process without a request from the next-of-kin. With the automation of the program, the insert will accompany the issuance of the original certificate. The insert will provide a convenient method for the recipients of the original PMC to request additional certificates and/or replacement or corrected certificates.

Affected Public: Individuals or households.

Estimated Annual Burden: 1,080 hours.

Estimated Average Burden Per Respondent: 2 minutes.

Frequency of Response: On occasion.

Estimated Number of Respondents: 32,400.

FOR FURTHER INFORMATION CONTACT: Requests for additional information or copies of the form should be directed to Department of Veterans Affairs, Attn: Jacquie McCray, Information Management Service (045A4), 810 Vermont Avenue, NW, Washington, DC 20420, Telephone (202) 273–8032 or FAX (202) 273–5981.

Dated: August 23, 1996.

By direction of the Secretary.

William T. Morgan,

Management Analyst.

[FR Doc. 96–22750 Filed 9–5–96; 8:45 am]

BILLING CODE 8320–01–P

Agency Information Collection: Submissions for OMB Review; Comment Request

AGENCY: Veterans Benefits Administration, Department of Veterans Affairs.

ACTION: Notice

SUMMARY: The Veterans Benefits Administration (VBA), Department of Veterans Affairs, has submitted to the Office of Management and Budget (OMB) the following proposals for the collection of information under the provisions of the Paperwork Reduction Act (44 U.S.C. Chapter 35).

OMB Control Number: 2900–0099.

Title and Form Number: Request for Change of Program or Place of Training—Survivors' and Dependents' Educational Assistance, VA Form 22–5495.

Type of Review: Extension of a currently approved collection.

Need and Uses: This form is completed by a veteran's spouse, surviving spouse, or child to indicate a change in program and/or place of training. The VBA uses the information to determine if the student is eligible for dependents' educational assistance for the new program and/or place of training.

Affected Public: Individuals or households.

Estimated Annual Burden: 4,850 hours.

Estimated Average Burden Per Respondent: 30 minutes per application.

Frequency of Response: On occasion.

Estimated Number of Respondents: 9,700.

OMB Control Number: 2900–0171.

Title and Form Number: Application and Enrollment Certification for Individualized Tutorial Assistance, VA Form 22–1990t.

Type of Review: Extension of a currently approved collection.

Need and Uses: The VA uses the information collected to determine eligibility for tutorial assistance. The form is sent by the applicant to the school for certification and transmission to the VA. The school will transmit the form to the appropriate VA regional office (i.e., Atlanta, Buffalo, Muskogee, or St. Louis) with jurisdiction over the area where the school is located. Without the information on this form, the VA would be unable to determine the applicant's eligibility for tutorial assistance.

Affected Public: Individuals or households.

Estimated Annual Burden: 2,000 hours.

Estimated Average Burden Per Respondent: 30 minutes.

Average Number of Responses: 2 annually.

Estimated Number of Respondents: 2,000.

OMB Control Number: 2900–0383.

Title and Form Number: Application for Educational Assistance Test Program Benefits (Section 901, PL 96–342), VA Form 22–8889.

Type of Review: Extension of a currently approved collection.

Need and Uses: The form is used by individuals under the Educational Assistance Test Program (EATP) to apply for educational benefits. The VBA uses the information to determine eligibity for EATP benefits.

Affected Public: Individuals or households.

Estimated Annual Burden: 125 hours.

Estimated Average Burden Per Respondent: 30 minutes.

Frequency of Response: On occasion.

Estimated Number of Respondents: 250.

Comments and recommendations concerning the submissions should be directed to VA's OMB Desk Officer, Allison Eydt, OMB Human Resources and Housing Branch, New Executive Office Building, Room 10235, Washington, DC 20503 (202) 395–4650. DO NOT send requests for benefits to this address.

DATES: Comments on the information collections should be directed to the OMB Desk Officer on or before October 7, 1996.

FOR FURTHER INFORMATION CONTACT: Ron Taylor, VA Clearance Officer (045A4), (202) 565–4412.

Dated: August 22, 1996.

By direction of the Secretary.

Donald L. Neilson,

Director, Information Management Service.

[FR Doc. 96–22751 Filed 9–5–96; 8:45 am]

BILLING CODE 8320–01–P

Advisory Committee on Prosthetics and Special-Disabilities Programs; Notice of Meeting

The Department of Veteran Affairs (VA) gives notice under Public Law 92–463 that a meeting of the Advisory Committee on Prosthetics and Special-Disabilities Programs will be held Monday and Tuesday, September 16–17, 1996, at VA Headquarters, 810 Vermont Avenue, N.W., Washington, D.C. The meeting will be held in Room 730. The September 16 session will convene at 8:00 a.m. and adjourn at 4 p.m. and the September 17 session will convene at 8:00 a.m. and adjourn at 12:00 noon. Both days will involve briefings by the National Program Directors of the Special-Disabilities Programs regarding the status of their activities over the last six months, pending change in eligibility reform, and the continued impact of the Veterans Health Administration's reorganization on the delivery of services for these special-disabilities programs.

The purpose of the Advisory Committee is to advise the Department on its prosthetic programs designed to provide state-of-the-art prosthetics and the associated rehabilitation research, development, and evaluation of such technology. The Advisory Committee also advises the Department on special disability programs which are defined as any program administered by the Secretary to serve veterans with spinal cord injury, blindness or vision impairment, loss of or loss of use of extremities, deafness or hearing impairment, or other serious incapacities in terms of daily life functions.

The meeting is open to the public to the capacity of the room. For those wishing to attend, contact Kathy Pessagno, Veterans Health Administration (113), phone (202) 273–8512, Department of Veterans Affairs, 810 Vermont Avenue, N.W., Washington, D.C. 20420, prior to September 11, 1996.

Dated: August 29, 1996.

Eugene A. Brickhouse,

Committee Management Officer.

[FR Doc. 96–22747 Filed 9–5–96; 8:45 am]

BILLING CODE 8320–01–M

Corrections

Federal Register
Vol. 61, No. 174
Friday, September 6, 1996

This section of the FEDERAL REGISTER contains editorial corrections of previously published Presidential, Rule, Proposed Rule, and Notice documents. These corrections are prepared by the Office of the Federal Register. Agency prepared corrections are issued as signed documents and appear in the appropriate document categories elsewhere in the issue.

DEPARTMENT OF ENERGY

Federal Energy Regulatory Commission

[Docket No. RP92-237-028]

Alabama-Tennessee Natural Gas Company; Notice of Motion to Amend Approved Settlement

Correction

In notice document 96–21379 appearing on page 43349 in the issue of Thursday, August 22, 1996, the docket line should read as set forth in the heading.

BILLING CODE 1505–01–D

GENERAL ACCOUNTING OFFICE

4 CFR Part 7

Personnel Relations and Services

Correction

In proposed rule document 96–21435 appearing on page 44187 in the issue of Wednesday, August 28, 1996, in the second column, under **DATES:**, in the second line, remove ''30 days from''.

BILLING CODE 1505–01–D

federal register

Friday
September 6, 1996

Part II

Federal Reserve System

12 CFR Part 225

Bank Holding Companies and Change in Bank Control (Regulation Y); Proposed Rule

FEDERAL RESERVE SYSTEM

12 CFR Part 225

[Regulation Y; Docket No. R–0935]

Bank Holding Companies and Change in Bank Control (Regulation Y)

AGENCY: Board of Governors of the Federal Reserve System.

ACTION: Notice of proposed rulemaking; request for comments.

SUMMARY: The Board is proposing a comprehensive amendment of Regulation Y that is intended to improve the competitiveness of bank holding companies by eliminating unnecessary regulatory burden and operating restrictions, and by streamlining the application/notice process. Among other proposed revisions, the Board proposes to establish a streamlined and expedited review process for bank and nonbanking proposals by well-run bank holding companies. The Board also proposes to reorganize and expand the regulatory list of nonbanking activities and to remove a number of restrictions on those activities that are outmoded, have been superseded by Board order or do not apply to insured banks that conduct the same activity. In addition, the Board proposes several amendments to the tying restrictions, including removal of the regulatory extension of those restrictions to bank holding companies and their nonbank subsidiaries. A number of other changes have also been proposed to eliminate unnecessary regulatory burden and to streamline and modernize Regulation Y, including changes to the provisions implementing the Change in Bank Control Act and section 914 of the Financial Institutions Reform, Recovery, and Enforcement Act of 1989.

DATES: Comments must be received by October 31, 1996.

ADDRESSES: Comments should refer to Docket No. R–0935, and may be mailed to Mr. William W. Wiles, Secretary, Board of Governors of the Federal Reserve System, 20th Street and Constitution Avenue, NW., Washington, DC 20551. Comments may also be delivered to Room B–2222 of the Eccles Building between 8:45 a.m. and 5:15 p.m. weekdays, and to the guard station in the Eccles Building courtyard on 20th Street, NW. (between Constitution Avenue and C Street) at any time. Comments received will be available for inspection in room MP–500 of the Martin Building between 9 a.m. and 5 p.m. weekdays, except as provided in section 261.8(a) of the Board's Rules Regarding Availability of Information.

FOR FURTHER INFORMATION CONTACT: Scott G. Alvarez, Associate General Counsel (202/452–3583), Gregory A. Baer, Managing Senior Counsel (202/452–3236), Diane A. Koonjy, Senior Attorney (202/452–3274), Lisa R. Chavarria, Attorney (202/452–3904), Satish M. Kini, Attorney (202/452–3818), Legal Division; Molly Wassom, Assistant Director (202/452–2305), Sid Sussan, Assistant Director (202/452–2638), Division of Banking Supervision and Regulation, Board of Governors of the Federal Reserve System. For the hearing impaired only, Telecommunication Device for the Deaf (TDD), Dorothea Thompson (202/452–3544), Board of Governors of the Federal Reserve System, 20th Street and Constitution Avenue, NW., Washington, DC.

SUPPLEMENTARY INFORMATION:

Outline: The discussion of proposed revisions to Regulation Y is divided into the following sections:

A. Summary of principles applied in reviewing and revising Regulation Y.
B. Summary of proposed revisions.
C. Explanation of proposed changes to the procedures governing bank acquisitions.
D. Explanation of proposed changes to the nonbanking provisions.
E. Explanation of restrictions removed from permissible nonbanking activities.
F. Explanation of changes to tying rules.
G. Explanation of other changes.

Discussion

A. Summary of the Principles Applied in Reviewing and Revising Regulation Y

Regulation Y is the regulation the Board has adopted to implement the requirements of the Bank Holding Company Act (the BHC Act), the Change in Bank Control Act and provisions of the Federal Deposit Insurance Act. As required by section 303 of the Riegle Community Development and Regulatory Improvement Act of 1994, the Board has conducted a comprehensive review of Regulation Y to improve efficiency, reduce unnecessary costs, and eliminate unwarranted constraints on credit availability while faithfully implementing statutory requirements. This review included discussions with staff of the other federal banking agencies regarding the implementation of common statutory provisions.

Based on this review, the Board proposes a comprehensive revision to Regulation Y that is intended to improve the competitiveness of bank holding companies by eliminating unnecessary regulatory burden and operating restrictions, and by streamlining and expediting the application/notice process. The revisions proposed by the Board to Regulation Y are summarized in the following sections and explained more fully in sections C through G.

The Board invites comment on all aspects of its proposed revisions. In addition, the Board invites other suggestions on revisions to Regulation Y that would eliminate unnecessary burden while adhering to applicable statutory requirements and maintaining safety and soundness.

Approval Process

Much of Regulation Y is comprised of procedures for evaluating applications and notices. A number of revisions are proposed to these procedures with the goal of eliminating, to the fullest extent permitted under current law, any unnecessary burden and paperwork.

Two important principles underlie the revisions that are proposed to the approval process for bank holding companies. First, the new regulation would establish objective and verifiable measures for each of the criteria set forth in the BHC Act and an expedited and nearly red-tape free approval process for those bank holding companies that meet these measures. Under this new procedure, a bank holding company that meets these objective measures should be able to expect little burden or delay from the approval process unless special circumstances demonstrate that a closer review is warranted. Second, the application/notice process should focus on an analysis of the effects of the specific proposal and should *not* normally become a vehicle for comprehensively evaluating and addressing supervisory and compliance issues at the applicant organization that can more effectively be addressed in the supervisory process.

Importantly, these principles reflect a change in approach to the application/notice process, both procedural and substantive. They recognize that the approval process is most effective as a gateway for identifying (and rejecting) organizations that do not have the resources or expertise to make an acquisition or conduct a particular activity; and that the on-site inspection and supervisory process is the most effective way to determine if a particular organization is in fact managing its subsidiaries or conducting an approved activity in a safe and sound manner and operating within its authority.

Based on these principles, a new streamlined approval procedure is proposed that would permit well-rated and well-run bank holding companies to acquire banks and nonbanking

companies and to engage in permissible nonbanking activities *de novo* with the filing of a simple, short letter and only 15 days advance notice. A qualifying bank holding company would be required to provide only minimal information in connection with a notice (basically a brief description of the proposal and certification that the financial and other criteria are met). Staff analysis of these proposals would be focused on verifying that the qualifying criteria are in fact met. As explained in more detail below, a qualifying bank holding company could make bank and nonbanking acquisitions using this streamlined procedure totaling up to 35 percent of the risk-weighted assets of the acquiring bank holding company during any 12 month period. This limitation on the size of acquisitions would not apply to the acquisition of banks by small qualifying bank holding companies so long as the *pro forma* consolidated assets of the holding company do not exceed $300 million. All bank acquisition proposals that exceed 35 percent of assets (or cause a small bank holding company to exceed $300 million in assets) or that involve bank holding companies that otherwise do not meet the qualifying criteria would be reviewed under the Board's current 30/60-day procedure.

Approximately 85 percent of the bank holding companies with consolidated assets in excess of $100 million would qualify generally for this expedited procedure and more than 50 percent of the applications/notices reviewed by the System during 1995 would have qualified for this new streamlined procedure. Adoption of this procedure would substantially reduce the paperwork that must be filed by a qualifying bank holding company, the staff analysis of proposals by these well-run organizations, and the time required to secure System action on these proposals. In addition to reducing burden on qualifying applicants, adoption of this new procedure should free up System resources to focus on cases raising more complex and difficult issues, thereby improving the processing time associated with these cases.

The new proposed procedure follows the approach taken in the regulatory relief bills currently pending before Congress but cannot reach the level of efficiency in the regulatory relief bills without a change in the terms of the BHC Act. For example, the BHC Act currently requires that a bank holding company obtain Board approval *prior* to acquiring an additional bank or commencing a nonbanking activity. Thus, the Board may not eliminate the prior approval process for bank or nonbanking proposals and may not adopt a post-consummation notification process in place of a pre-consummation approval process. However, the abbreviated prior notice procedure that is proposed here would satisfy the BHC Act by permitting consummation of a bank or nonbanking proposal at the expiration of a brief notice period. The proposed regulatory relief bill would eliminate the prior approval requirement altogether for certain classes of nonbanking proposals and permit post-consummation notice.[1]

As part of the review of the procedures governing bank acquisition proposals, the Board's policies governing public comment have been reviewed to assure that a meaningful opportunity for public comment is provided while at the same time providing for the efficient and timely processing of applications and notices. As discussed more fully below, the proposed revisions would retain the Board's self-imposed 30-day public comment period for bank acquisition proposals, with publication of these proposals required in the Federal Register and local newspapers. The proposal recommends, however, that the System limit the exercise of its discretion to consider untimely comments and adhere strictly to the Board's existing rule that only comments received during the public comment period be considered, absent a showing of extraordinary circumstances.

Other revisions have been proposed to the various procedures in Regulation Y to eliminate unnecessary burden and to make the application/notice procedure more focused and efficient. For example, the proposal would streamline the procedure for a bank holding company to obtain a waiver for transactions that are in substance a bank-to-bank merger subject to review by another federal banking agency, and would extend this waiver procedure to internal corporate reorganizations. In addition, the proposal would eliminate the 4-week pre-acceptance review period for bank acquisition proposals, thereby allowing prompt acceptance and review of bank acquisition proposals. These suggestions are outlined below and explained in detail in later sections of this document.

Nonbanking Activities

Regulation Y also addresses the permissible nonbanking activities of bank holding companies. As noted above, a streamlined procedure is suggested for proposals by bank holding companies to acquire nonbanking companies and to engage *de novo* in permissible nonbanking activities. In addition, the ''laundry list'' of nonbanking activities that the Board has defined by regulation as ''closely related to banking,'' and hence permissible, has been revised and reorganized, and a number of other changes suggested to improve the ability of bank holding companies to engage in nonbanking activities.

Several principles guided the suggested reforms in the nonbanking area. Most important is the premise that bank holding companies should be permitted to conduct nonbanking activities to the fullest extent permissible under the BHC Act and that the regulation should be sufficiently flexible to allow for industry changes in permissible activities without creating unnecessary additional filing burdens. Thus, definitions of permissible activities have been broadened and updated, and new procedures are proposed to make it easier for any interested person to obtain a Board decision regarding whether a new activity is permissible. The proposed revisions anticipate that the Board would be pro-active in authorizing new activities, especially as new activities are permitted for banks or as new financial activities develop, and recognize that, under the BHC Act, bank holding companies are authorized to conduct activities beyond the scope of activities that insured banks may conduct.

A comprehensive revision of the restrictions that govern the nonbanking activities of bank holding companies has also been conducted. This review drew on the experience that the System has developed over the past two decades in authorizing and supervising nonbanking activities and reflects removal of a significant number of restrictions that the System's experience has found are not necessary or are outdated. A basic tenet of the revisions proposed in this area is that a bank holding company should not be subject to supervisory restrictions on the conduct of a specific activity that would not apply to an insured depository institution conducting the same activity. Another precept guiding this review is that supervisory principles governing

[1] The regulatory relief bills in both the House and the Senate would allow well-capitalized and well-managed banks, without any prior notice, to engage *de novo* in nonbanking activities that have been approved by the Board by regulation. These companies would also be permitted, after providing the Board with 12 to 15 business days' prior notice, to acquire any bank or any nonbanking company engaged in a permissible activity so long as the bank or nonbanking company represents less than 10 percent of the assets of the acquiring bank holding company.

the conduct of an activity should be clearly explained, adjusted to take account of market developments and the System's experience in supervising the activity, and, wherever appropriate, uniformly applied to insured depository institutions and their affiliates on an interagency basis.

Accordingly, the proposed revisions eliminate restrictions on the conduct of specific activities that would not apply to insured depository institutions that conduct the same activity. Also eliminated were any restrictions that are outmoded or that the Board has already superseded by order. It is anticipated that, unless the Board determines otherwise with regard to a specific activity or company, these restrictions would be removed at the time of final adoption of the proposed regulation for all bank holding companies with authority to conduct the relevant activity, without requiring that individual bank holding companies obtain specific relief or additional consent.

In addition, the revisions contemplate that the Board, in conjunction with the other banking agencies wherever appropriate, will develop supervisory policy statements that govern the conduct of certain activities. A supervisory policy statement has the advantage of being more easily adjusted to reflect market developments and provides a vehicle for more comprehensive guidance on the conduct of a specific activity than individual regulatory restrictions.

The Board and the other agencies have made effective use of supervisory policy statements in other areas, most notably in providing guidance on the sale of securities and other nondeposit investment products on bank premises. System experience has been that bank holding companies have taken these statements seriously. Accordingly, the revisions anticipate that several restrictions that currently are contained in Regulation Y would be moved to supervisory policy statements that would be developed at a later date.

The proposed regulation continues to anticipate that the marketplace for already approved activities will develop and evolve. Bank holding companies may continue to participate in these market developments in permissible activities without seeking additional Board approval. In the past, there has on occasion been uncertainty regarding whether a particular development or variation in an activity represents a fundamental change that redefines the activity into a new activity for which an additional approval would be required under the BHC Act. To address this, a new procedure has been proposed outside of the application/notice process through which a bank holding company may, on an expedited basis, obtain Board confirmation that a given development or variation in an activity is permissible. These interpretations of the scope of permissible activities would be published and would allow all bank holding companies to participate in the development or variation without additional approval. This procedure would eliminate a number of notices filed by bank holding companies that are uncertain of the scope of permissible nonbanking activities.

Tying Restrictions

A final principle underlying the proposal is that each restriction in Regulation Y should be reevaluated in light of developments in the marketplace in which nonbanking subsidiaries of bank holding companies operate. Application of this principle warrants significant changes to the Board's anti-tying regulation, which the Board already has revised substantially over the past two years. Section 106 of the Bank Holding Company Act Amendments of 1970 restricts tying arrangements by banks on the grounds that the unique role of banks in the economy, in particular their power to extend credit, would allow them to gain a competitive advantage in other markets. In 1971, the Board by regulation extended the coverage of these anti-tying rules to bank holding companies and their nonbank subsidiaries. However, the Board's experience has shown that these nonbanking companies generally operate in markets that are notable for their competitive vitality. Accordingly, the proposed revisions eliminate the Board's regulatory extension of the anti-tying statute, leaving restriction of anti-competitive behavior by bank holding companies and their nonbank subsidiaries to the same general antitrust laws that govern their competitors.

Other Changes

As explained in more detail below, these various principles have also led to a number of other suggested reforms to Regulation Y. In addition to proposing the suggestions discussed below, the Board invites suggestions on other revisions to Regulation Y that would further eliminate unnecessary regulatory burden and paperwork.

B. Summary of Proposed Revisions

The Board seeks public comment on proposals to amend Regulation Y to:

Bank Acquisition Proposals

- Establish a streamlined 15-day notice procedure for proposals by *well-capitalized* and *well-managed* bank holding companies with ''satisfactory'' or better CRA performance records to acquire banks, within limits (this procedure would currently be available to approximately 85 percent of the bank holding companies with assets over $100 million and would have applied to approximately 50 percent of the applications/notices submitted to the System last year);
- Eliminate the pre-acceptance period for *all* filings to acquire a bank (thereby expediting processing of bank acquisition proposals by as much as 28 days);
- Provide for publication of newspaper and Federal Register notices regarding bank acquisition proposals up to 30 days *before* a filing for approval of the transaction is made;
- Adhere strictly to the Board's policies governing acceptance of public comments to require all comments on bank acquisitions to be submitted during the public comment period;[2]
- Streamline the current waiver procedure for transactions that are in substance bank-to-bank mergers and expand the procedure to apply to internal corporate reorganizations by registered bank holding companies;

Proposals Involving Nonbanking Activities and Acquisitions

- Establish a streamlined 15-day notice procedure for proposals by *well-capitalized* and *well-managed* bank holding companies to engage *de novo* in permissible nonbanking activities and to acquire, within limits, nonbanking companies engaged in any activity permitted by regulation or permitted for that bank holding company by order;
- Revise and reorganize the laundry list of permissible nonbanking activities into fourteen categories of functionally related activities and permit bank holding companies to obtain approval at one time to engage in all activities on the list or within the same functional category;
- Broaden the scope and description of activities, including in particular, derivatives trading and investment activities, investment advisory activities, and management consulting activities;
- Expand data processing and management consulting activities to include, as an incidental activity, deriving up to 30 percent of total revenue from *nonfinancial* data processing and management consulting activities;
- Add to the regulatory laundry list of permissible nonbanking activities several nonbanking activities previously approved by the Board by order, including private placement of securities, acting as riskless principal in the sale of securities, acting as a futures commission merchant in the sale of nonfinancial futures and options on futures, providing career counseling services to employees in the financial industry, and providing asset management services;
- Remove from the regulation restrictions on the conduct of permissible nonbanking

[2] As part of its review of Regulation Y, the Board has delegated additional authority to the Reserve Banks to act on certain classes of protested bank acquisition proposals.

activities that have been superseded by Board order, are unnecessary or would not apply to the conduct by an insured bank of the same activity, including restrictions on the conduct of leasing activities, private placement and riskless principal activities, derivatives investment and advisory activities, futures clearing and execution activities, foreign exchange activities, the sale of payment instruments, tax planning and preparation activities, and consumer counseling activities;

• Eliminate the one year time limit on System approvals to engage *de novo* in permissible nonbanking activities for bank holding companies that maintain adequate capital and satisfactory examination ratings (this would allow a bank holding company to seek a single approval to engage in all permissible nonbanking activities);

• Establish a streamlined procedure outside the application process for bank holding companies and others to obtain an advisory opinion from the Board about the scope of permissible activities;

• Revise the Board's policy statement governing the investment advisory activities of bank holding companies to remove several restrictions that currently apply to bank holding companies that advise mutual funds;

• Provide for publication of Federal Register notices regarding nonbanking proposals up to 30 days *before* a filing for Board approval is made;

• Allow bank holding companies with approval to engage in any lending activity broader authority to acquire, in the ordinary course of business and without special Board approval, assets from third parties engaged in the same activity;

Revision of Tying Rules

• Remove Board-imposed tying restrictions that limit the ability of non-bank affiliates of a holding company to package their products, create exceptions from the statutory restriction on bank tying arrangements to allow banks greater flexibility to package products with their affiliates, and clarify that the tying restrictions do not apply abroad;

Bank Holding Company Formations

• Reduce the threshold qualifications and information requirements for the existing abbreviated procedure for bank holding company formations by current shareholders of a bank;

Change in Bank Control Act Filings

• Eliminate the current requirement that a person that has already received Board approval under the Change in Bank Control Act obtain additional approvals to acquire additional shares of the same bank or bank holding company;

• Add a definition of the term *acting in concert* and establish presumptions to resolve questions about when a group is *acting in concert*;

• Allow after-the-fact filings when a CIBC Act filing requirement is triggered by the action of an unrelated third party;

• Permit public notice of CIBC Act filings to be published 30 days in advance of filing notice with the System;

Other Changes

• Modify requirements for filing prior notice of changes in directors and senior executive officers of state member banks and bank holding companies and clarify the appeals process for rejected notices;

• Establish a regulatory presumption that exempts testamentary trusts from the definition of *company* in the BHC Act;

• Reduce from 30 to 15 the number of days notice required before a large stock redemption by a bank holding company, permit bank holding companies to take account of intervening new issues of stock in computing when a stock redemption notice must be filed, and allow small bank holding companies to make stock redemptions without notice if the holding company meets certain leverage and capital requirements applicable to small bank holding companies;

• Update and revise the Board's existing policy statement on small one-bank holding companies to reduce burden in the approval process for proposals to form small bank holding companies and by small bank holding companies to acquire additional banks; and

• Implement current Board decisions defining the terms *class of voting securities* and *immediate family*.

C. Explanation of Proposed Changes to the Procedures Governing Bank Acquisitions

1. Streamlined Procedure for Well-Run Bank Holding Companies

The proposed revision would establish a 15-day notice procedure for acting on bank acquisition proposals by well-run bank holding companies if the following criteria are met:

• *Well-capitalized*. Both before and immediately following the transaction, the bank holding company, its lead insured depository institution and insured depository institutions controlling at least 80 percent of the total depository institution assets of the bank holding company are *well-capitalized*;[3]

• *Well-managed*. At the time of the transaction, the bank holding company, its lead insured depository institution and insured depository institutions controlling at least 80 percent of the total depository institution assets of the bank holding company are *well-managed* (*i.e.*, have received one of the two highest composite ratings at the most recent examination, a ''satisfactory'' management rating and at least a ''satisfactory'' compliance rating);

• *Satisfactory CRA rating.* At the time of the transaction, the lead insured depository institution and insured depository institutions controlling at least 80 percent of the total insured depository institution assets of the acquiring bank holding company have a ''satisfactory'' or better performance rating at the most recent CRA examination;

• *Competition.* In every relevant banking market as defined by the Board, the market share for deposits controlled by the acquiring bank holding company following the transaction is below 35 percent and the proposal conforms with the Department of Justice Horizontal Merger Guidelines as applied to banking organizations, in both cases relying on thrift weighting at 50 percent and without reliance on divestitures;

• *Size of acquisition.* During any 12 month period, the book value of the aggregate assets acquired by the bank holding company, combining all acquisitions under the expedited procedure for bank acquisitions with acquisitions under the expedited procedure for nonbanking proposals, does not exceed 35 percent of the consolidated total risk-weighted assets of the acquiring bank holding company as measured at the beginning of the 12 month period. This limitation would not apply to bank acquisitions by qualifying bank holding companies that have assets of less than $300 million on a *pro forma* basis;

• *Interstate.* Approval of the proposal is not barred under the provisions governing interstate acquisitions (e.g., meets relevant deposit concentration limits, State age requirements, and other applicable requirements);

• *Consolidated Home Country Supervision.* The acquiring bank holding company meets the requirement for consolidated home country supervision contained in the BHC Act; and

• *No Supervisory Actions.* At the time of the transaction, no significant supervisory action is pending against the acquiring bank holding company.

As of March 31, 1996, approximately 85 percent of the bank holding companies with assets greater than $100 million would qualify for these procedures. More than 50 percent of the applications/notices submitted by bank holding companies during 1995 would have qualified for this streamlined procedure and reduced filing requirement.

A bank holding company that meets these qualifications would be able to acquire a bank or bank holding company by providing the appropriate Reserve Bank with 15-day prior written notice of the transaction. Under this procedure, a bank holding company would be required to provide only limited information. The information requirements are specified in the proposed regulation and have been reduced to providing certification that the bank holding company and the transaction meet the requirements for the procedure, a description of the transaction and the parties, and certain *pro forma* information regarding the financial and competitive effects of the transaction. The bank holding company must also provide evidence that public notice of the transaction has been given sufficiently in advance to permit interested members of the public 30

[3] A small bank holding company—defined as any bank holding company with assets under $150 million—would be required to meet certain debt-to-equity levels to qualify for this streamlined procedure.

days to submit their views regarding the proposal to the Board.

An identical expedited procedure is proposed for nonbanking proposals by *well-capitalized* and *well-managed* bank holding companies where the bank holding company proposes to engage *de novo* or to acquire a company engaged in a nonbanking activity that the Board has approved by regulation or, with limited exceptions designated by the Board, by order. The aggregate size limitation discussed above (*i.e.*, an aggregate limit of 35 percent of assets during any 12 month period for all acquisitions under the bank and nonbanking expedited procedures) would limit the total amount of banking and nonbanking acquisitions that a bank holding company could make during any 12 month period under the streamlined notice procedures. Finally, because the CRA, interstate banking, and home country supervision requirements do not apply to transactions under section 4 of the BHC Act, no criteria would be established in these areas for nonbanking proposals under the expedited procedure.[4]

The proposed procedure would permit the Board or the Reserve Bank to notify a bank holding company for any reason that this streamlined notice procedure is not available and that a full application—subject to the current application procedure—would be required. This provision provides a mechanism to address situations in which information obtained either in an examination or outside the examination process indicates that a more thorough review of the organization's ability to meet the statutory factors is warranted. For example, the Board could follow the normal 30/60-day procedure in cases that are subject to a substantive protest, that raise issues regarding the funding of a transaction or that raise concerns about the ability of the applicant adequately to manage the risks associated with a particular activity. It is anticipated that this mechanism would be used only sparingly and in extraordinary situations.

A company or proposal that does not qualify for the proposed streamlined procedure would follow the current application process, which provides for Reserve Bank action within 30 days of filing and Board action on more complex cases within 60 days of filing. As explained below, a number of steps are proposed to reduce the burden of the current application process. In the event that, during the review of a transaction under the expedited proposal, the Board determines that a bank holding company must follow the current approval procedure rather than the expedited procedure, the proposed regulation contemplates that the notice filed by the holding company under the expedited procedure would be accepted under the normal procedure and that the normal procedure will be deemed to have begun at the time that the expedited notice was filed.

In the case of the acquisition of a bank, the BHC Act requires that the primary supervisor for the bank to be acquired be given 30 calendar days in which to submit comments on the transaction. In practice, the primary supervisor generally allows the notice period to expire without filing comments. Moreover, financial, managerial, legal and safety and soundness concerns that are known to the primary bank supervisor are generally also known by the Board because of ongoing sharing of supervisory information. Accordingly, it usually serves no regulatory purpose to allow this 30-day notice period to serve as a constraint on the Board's action on a proposal.

Under the proposed procedure, the Reserve Bank would provide notice of a proposal to the primary supervisor. The proposed procedure contemplates that the System will act on any proposal within 15 days of receiving a filing regarding the proposal even though the period for obtaining comments from the primary supervisor has not expired. The new procedure provides, however, that the System's action is subject to revocation if the primary supervisor objects to a transaction within the relevant notice period. Because bank acquisition proposals may not be consummated for 15 days after System action—which is the post-approval waiting period established by statute to allow the Department of Justice to review a transaction—it is expected that the notice period for the primary supervisor will expire prior to consummation of a bank acquisition proposal.

The Board seeks comment on all aspects of this proposed procedure, including comment on whether the procedure is workable and likely to reduce burden and whether the proposed regulatory criteria are appropriate. The Board intends that the proposed expedited procedure apply to ''well-run'' bank holding companies, whether domestic or foreign, large or small. The Board seeks comment on whether the criteria proposed are appropriately defined to achieve this result. In this regard, the Board has already proposed an adjustment to the qualifying criteria for small bank holding companies (defined as bank holding companies with total assets under $300 million).

2. Elimination of the Pre-Acceptance Period for Bank Acquisition Proposals

Currently, Regulation Y provides a period prior to acceptance of a filing involving a bank acquisition proposal during which the appropriate Reserve Bank reviews the informational sufficiency of the filing and may ask for additional information. An application is accepted for processing once the information requested during this pre-acceptance period is provided. A similar pre-acceptance period for nonbanking proposals was eliminated by the Board in 1993 and the experience with nonbanking proposals since that time indicates that the pre-acceptance period is not necessary.

Accordingly, the proposed revision to Regulation Y would eliminate the pre-acceptance period for all bank acquisition proposals. This change would shorten by as much as 28 days the period that a proposal is within the System, and would begin the processing of all applications involving a bank acquisition—both under the streamlined and standard procedure—on the date of submission of the required filing. The proposed revision to Regulation Y would provide that, within 7 calendar days of receipt of a notice or application to acquire a bank, the appropriate Reserve Bank must either accept the filing as of the date of receipt or return the filing as informationally incomplete. It is expected that a filing that contains the information specified in the regulation or in the appropriate Federal Reserve form will, except in extraordinary circumstances, be accepted for action. The draft regulation would allow the Board or the Reserve Bank to request any additional information at any time during the period for review of the proposal, although one of the premises underlying the expedited procedure is that an analysis of transactions that qualify for expedited processing will be limited and information beyond the information stated in the regulation will only be requested for those proposals in special circumstances.

3. Timing of Publication

In the case of a bank expansion proposal, the Board's rules require that notice be published by the applicant in local newspapers and by the Board in the Federal Register. The Board initiated the newspaper publication

[4] Consistent with Board precedent, the CRA criterion *would* apply to proposals by bank holding companies to acquire savings associations under section 4.

requirement for bank acquisition proposals in order to solicit information from the local community regarding the effect of a proposal on the convenience and needs of the local community, and retained the requirement after the enactment of the Community Reinvestment Act. Public notice of nonbanking proposals is published only in the Federal Register.

Currently, the Board's rules require that newspaper notice of a proposed bank acquisition be published in a newspaper of general circulation no more than 7 days before or 7 days after the appropriate filing is made with the Reserve Bank. The Board publishes notice in the Federal Register of both bank acquisition proposals and nonbanking proposals upon receipt of a filing. In over 90 percent of the bank acquisition proposals filed with the System, no public comments are submitted. Consequently, the current publication schedule often results in substantial delay in action on a proposal in which no comments are submitted. For example, because the public comment period is typically 30 days, this publication schedule delays action on some proposals until up to 37 days after the proposal has been filed to allow for Federal Register publication.

Moreover, public announcement of a proposed bank acquisition usually well pre-dates the newspaper and Federal Register publication. This has led to confusion on the part of commenters about when a timely comment may be filed with the System.

To avoid this delay and confusion, the regulation would provide for newspaper publication of bank acquisition proposals up to 30 days prior to submission of a filing for System approval, which is closer to the time of the actual public announcement of the proposal. In addition, the applicant would be permitted to request that the Board publish notice of a proposal in the Federal Register up to 30 days before a filing is made with the System. This change would apply to all bank and nonbanking proposals, including cases that qualify for the new streamlined procedures outlined above, and would allow more efficient processing of applications/notices while permitting the public a full comment period. In the case of proposals that qualify for the new streamlined procedure, advance publication of notice is essential to permit System action within 15 days following the filing.

4. Revision of Public Comment Procedures for Bank Acquisitions

As just noted, since 1960, the Board has provided by regulation for the publication of bank acquisition proposals. The Board's rules currently provide that all comments from the public regarding a proposed transaction must be received prior to the close of the public comment period. However, the rules also provide that the Board may, in its discretion, consider any untimely comment.

Since adoption of its publication rule, the Board has liberally used its discretion to consider all comments, in particular, supplemental comments filed by a commenter that has filed an initial timely comment, to the fullest extent practicable without delaying action on a proposal beyond the self-imposed 60-day processing schedule. There has been growing concern that this practice of accepting and considering public comments submitted after the close of the public comment period has encouraged some commenters to file comments after the close of the comment period, and other commenters to file cursory comments during the public comment period while submitting numerous and voluminous comments after the close of the comment period, sometimes as late as the day of the Board's consideration of the case.

The Board proposes to retain its current practice of requiring public notice of bank acquisition proposals and of providing commenters at least 30 days in which to develop and submit comments on bank acquisitions under the BHC Act. Similarly, public notice would continue to be given of all nonbanking proposals, with the public provided at least 14 days to comment on nonbanking transactions.

The Board also proposes, however, to adhere more strictly to its current rules, and—for both bank and nonbanking proposals—no longer to consider any comments submitted after the close of the comment period, including supplemental comments filed after the close of the comment period by a commenter that had filed initial comments on a timely basis, except in extraordinary circumstances in which the commenter provides compelling evidence that it could not have submitted all of its comments in a timely fashion.[5]

5. Streamlined Waiver Process for Proposals Involving Bank Mergers

The Board's current regulation permits bank holding companies to seek a waiver of the application filing requirement under the BHC Act for transactions that involve the acquisition of stock of a bank for an instant in time as part of a bank-to-bank merger. All of these transactions are subject to review by a federal banking agency under the Bank Merger Act, which requires review of the financial, managerial, competitive, convenience and needs and CRA effects of the bank merger. The Board established this waiver process to eliminate redundant review of these transactions by multiple federal banking agencies. The Board retained jurisdiction over these transactions and a modest review process because some transactions have an effect on the financial and other resources of the parent bank holding company, which is not subject to an analysis under the Bank Merger Act.

Under the Board's current waiver process, a bank holding company must provide 30 days advance notice to the System and file supporting information. A waiver is automatically granted at the end of that period unless the Board notifies the bank holding company that a full application is required. The Board received approximately 110 waiver requests in 1995.

The Board proposes to streamline the waiver procedure in three ways. First, the length of the review process for waivers would be reduced to 10 days from 30 days. Thus, a bank holding company would receive a waiver for a qualifying transaction if the System does not notify the bank holding company prior to expiration of a 10-day waiver review process that a full application is required. Second, the regulation would be amended to specify the information that must be provided with a waiver request. That information would be limited to a copy of the Bank Merger Act filing made with the appropriate federal banking agency for the banks involved in the merger, and

[5] As part of its review of its policies and procedures governing applications/notices, the Board has delegated additional authority to the Reserve Banks to act on cases involving protests that raise individual consumer complaints (such as denial of an individual loan), allegations for which the commenter provides no substantiation, and cases involving an assertion of violation of a law where a court of the agency responsible for enforcing the specific law has not made a determination that the law was violated and the Board has determined the law is not within the Board's jurisdiction to interpret and enforce (such as State laws preserving the rights of minority shareholders and federal equal employment laws). In each of these areas, the Reserve Bank would be required to review the performance record of the applicant and could act only if the CRA, managerial and other statutory factors supported approval. The Board's Inspector General endorsed this change in procedure based on a review of the Board's application process.

a description of the transaction at the bank holding company level, including the purchase price and the source of funding for the purchase price.

Third, the proposed regulation would make the waiver process available to internal reorganizations of bank holding companies, such as the transfer of banks within a registered bank holding company, the formation of new intermediate-tier bank holding companies, and the merger of intermediate-tier bank holding companies. Some of these transactions are not subject to a review under the Bank Merger Act. However, all of these transactions involve corporate reorganizations by registered bank holding companies that have received Board approval to control and operate the banks involved in the transaction. The Board has granted waivers for internal reorganizations in previous cases, on a case-by-case basis.

In all cases in which a waiver is available, the Board would retain the right to require a full application in individual cases if the Board determines that circumstances warrant a full Board review and the Board notifies the bank holding company that a filing is required.

The Board seeks comment on these revisions to the waiver procedure, including whether the criteria identified in the proposal are adequate to assure Board review of transactions that involve significant issues under the standards set forth in the BHC Act.

6. Small Bank Holding Company Policy Statement

In 1984, the Board adopted a policy statement governing the formation of small *one* bank holding companies that recognized that there are public benefits to permitting small bank holding companies with well capitalized and well managed subsidiary banks to operate with levels of debt that are somewhat higher than ordinarily permitted for bank holding companies. The Board proposes to revise and update this policy statement to reduce the burden on small bank holding companies of the applications process, especially for less highly leveraged organizations, and to otherwise remove obsolete language. The revised language reflects that the policy statement has, for some time, been applied to small bank holding companies (regardless of the number of subsidiary banks) otherwise meeting the statement's criteria, and not just to small *one* bank holding companies. The statement would also be revised to clarify that it applies to expansion proposals by small bank holding companies as well as to small bank holding company formations.

In addition, the statement would be updated to replace outdated language defining applicable capital levels with the requirement that all subsidiary banks be *well-capitalized*. Notifications to form small bank holding companies over banks that are well managed and in satisfactory condition, and that present no other issues, will be eligible for the expedited applications processing procedures if the pro-forma debt to equity ratio is 1.0:1 or less. The criteria under which these organizations could pay reasonable corporate dividends have also been simplified.

Other proposals to form bank holding companies will be subject to a focused review of the parent-level debt servicing ability or any other issue presented. It is not expected that these organizations will pay dividends until their leverage has been reduced to a 1.0:1 level.

The Board requests comment on these proposed revisions and, in particular, the effect of these revisions on proposals to form small bank holding companies and by small bank holding companies to acquire additional banks.

D. Explanation of Proposed Changes to the Nonbanking Provisions

1. General Review and Updating of Nonbanking Activities

The principal authority for bank holding companies to engage in nonbanking activities is set forth in section 4(c)(8) of the BHC Act. That section generally provides that a bank holding company may seek Board approval to engage in, or acquire shares of a company engaged in, activities that the Board has determined, after notice and opportunity for hearing, ''to be so closely related to banking or managing or controlling banks as to be a proper incident thereto.'' The statute provides that the Board may make this determination by order or by regulation. The Board has to date determined by regulation that 24 activities are ''closely related to banking'' and has determined by individual order that a number of additional activities are also ''closely related to banking.''

Once the Board has determined—either by regulation or by order—that an activity is ''closely related to banking,'' the Board need not make that determination again in subsequent cases. Review of subsequent cases is limited to determining whether the conduct of the nonbanking activity by the applying bank holding company would result in public benefits that outweigh the potential adverse effects (the ''proper incident'' test).

The list of nonbanking activities contained in Regulation Y (the ''laundry list'') is intended to serve the purpose of providing a convenient and detailed list of most of the activities that the Board has found to be closely related to banking and therefore permissible for bank holding companies. The Regulation Y laundry list also designates the activities that may be approved by the Reserve Banks under delegated authority, although the Board has delegated authority for Reserve Banks to act on proposals involving a number of activities approved by order during intervals between modifications of Regulation Y.

As explained above, the Board proposes to establish an expedited procedure for ''well-rated'' and ''well-run'' bank holding companies to obtain System approval to make nonbanking acquisitions that fall within the size limit noted above and to engage *de novo* in permissible nonbanking activities. The Board also proposes to reorganize the list of permissible nonbanking activities into fourteen categories of functionally related activities. This reorganization should make the list easier to understand and make it easier for bank holding companies to obtain approval to engage in related activities. For example, the proposed revisions would permit a bank holding company to obtain approval at one time to engage in all of the activities on the laundry list or all activities listed in a functional category, or, at the holding company's choosing, to obtain approval to engage in any specific activity within a category.

As part of the reorganization of the laundry list, the proposal amends the list to include nonbanking activities that previously have been determined by order to be closely related to banking. Among the activities that would be included are: (1) Riskless principal transactions; (2) private placement services; (3) foreign exchange trading for a bank holding company's own account; (4) dealing and related activities in gold, silver, platinum and palladium; (5) employee benefits consulting; (6) career counseling services; (7) asset management, servicing and collection activities; (8) acquiring and resolving debt-in-default; (9) printing and selling checks; and (10) providing real-estate settlement services.

The Board also proposes to broaden the scope of permissible derivatives and foreign exchange activities to assure that bank holding companies may conduct these activities to the same degree as banks, and to remove several restrictions on these activities that apply to bank holding companies but do not

apply to banks that conduct these activities. In addition, the proposal eliminates restrictions on a number of activities that no longer appear to be warranted or that have been superseded.[6] In particular, the proposal revises and updates the description of derivatives activities and foreign exchange activities to reflect recent Board decisions, and eliminates any requirement that the Board specifically review and approve new derivatives instruments or trading on new exchanges.

2. Mechanism for Authorizing New Activities

The proposal would add two provisions to Regulation Y to ease the burden associated with the authorization of new activities. First, the proposed regulation would specifically reflect the fact that the Board may, on its own initiative, begin a proceeding to find that an activity is permissible for bank holding companies, as the Board did in the case of many of the earlier nonbanking activities and as it is proposing in the management consulting, data processing and other areas as part of this proposal. The Board could amend the laundry list, for example, as new activities are authorized for banks, as experience with a narrowly defined activity indicates that bank holding companies should be permitted to engage in a more broadly defined activity, or as developments occur in technology or the marketplace for financial products and services. As part of this proposal, the System would actively track market developments as well as decisions that authorize banks to conduct new activities and evaluate adding these activities to the laundry list even if an individual request has not yet been made to engage in these activities.

Second, the Board proposes to amend the regulation to establish a streamlined procedure outside the application process through which a bank holding company may request an advisory opinion from the Board that a particular variation on an activity is permissible under an existing authorization and is not deemed to be a new activity. This procedure would be particularly helpful in areas such as data processing, investment advisory, derivatives and foreign exchange activities where some bank holding companies have questioned whether the general authorization granted by the Board to conduct these activities permits the bank holding company to conduct variations that develop in response to market changes after the original authorization granted by the Board.

These two procedures, when combined with the proposals to broaden several of the definitions of permissible nonbanking activities, should make it easier for bank holding companies to participate in marketplace developments in permissible nonbanking activities and in new activities. For example, because most permissible nonbanking activities have been broadly defined, a bank holding company would not be required to seek additional Board approval to participate in market developments in permissible activities. As noted above, if a bank holding company is uncertain about the permissibility of a development, an expedited procedure outside the approval process is available to obtain Board guidance on the scope of the authorized activity. All bank holding companies would then be able to act on the basis of that guidance without additional approval. This procedure will eliminate a number of applications that are currently filed by bank holding companies that are uncertain about the scope of permissible activities.

As previously noted, the draft proposal would also establish a procedure that would allow bank holding companies and others to seek a Board determination, outside of the applications process, that a given new activity is permissible. The Board could then add this activity to the new functional categories or establish a new category, as appropriate. At the time the Board reviews this new activity, the Board would determine whether it is appropriate to permit bank holding companies to engage in this activity without additional approval (as, for example, a variation of one or more previously authorized activities) or to require bank holding companies to obtain approval prior to conducting the activity (because, for example, the activity does not fall within a previously approved activity or category). The Board has in the past followed these approaches at various times.

3. Nonbanking Activities That Are Incidental to a Permissible Activity

The Board proposes to expand its interpretation governing the scope of activities that are incidental to a permissible nonbanking activity. For example, the Board has permitted bank holding companies that conduct permissible data processing activities to use excess hardware capacity to conduct data processing involving nonfinancial data where the hardware has not been purchased solely to create excess capacity and the holding company does not provide software to process the nonfinancial data (other than making system software available). The Board also permits bank holding companies to sell general purpose data processing hardware where the hardware represents less than 30 percent of the total cost of the data processing services provided by the bank holding company. In addition, the Board permits companies engaged in securities underwriting activities to provide certain incidental services so long as the revenue from those services is counted as ineligible revenue for purposes of applying the Board's section 20 revenue test.

Over the past year, several industry members have recommended that the Board broaden this interpretation to permit bank holding companies greater flexibility in conducting data processing and management consulting activities. In particular, these members have recommended that the Board permit a bank holding company, as an incidental activity to the holding company's permissible financial data processing and management consulting activities, to receive a modest amount of revenue from providing nonfinancial data processing services and from providing management consulting services to nonbanking companies.

Bank holding companies argue that they are at a competitive disadvantage in providing data processing and management consulting services because of the strict limitations tying these services to financial data and financial consulting. Bank holding companies also claim that these limitations disadvantage bank holding companies in hiring the most competent employees, who often have interests and skills beyond financial areas.

The Board proposes to amend Regulation Y to permit bank holding companies engaged in data processing and management consulting activities, as an incidental activity, to derive up to 30 percent of their annual revenue from nonfinancial data processing or consulting services. This 30-percent level is based on the amount of general purpose hardware that a bank holding company is already permitted to provide in connection with permissible data processing activities.

[6] For example, many of the current restrictions that treat private placement activities as impermissible underwriting activities would be eliminated. The Board recently eliminated these restrictions as they applied to riskless principal transactions. Restrictions designed to distinguish riskless principal and private placement activities from securities underwriting activities would be retained.

4. Removal of Restrictions Governing Permissible Activities

As noted above, the proposal would remove restrictions currently contained in the regulation that are outmoded, have been superseded by Board order or do not apply to insured depository institutions that conduct the same activity. A detailed discussion of the restrictions that are proposed to be removed is contained in section E below.

In summary, restrictions in the current regulation on the conduct of individual activities, such as restrictions governing disclosures to customers, requiring compliance with anti-tying rules, limiting disclosure of customer information, and requiring divestiture of property within specific periods of time, have been deleted from the regulation with the expectation that existing and future Board policies and guidance would more fully address the manner in which individual activities should be conducted. This approach permits greater flexibility in developing and changing the guidance for individual activities in order to adapt to changes and developments in the marketplace. Supervisory statements also permit the opportunity for uniform interagency guidance, where such an approach is appropriate.

5. Elimination of Time Limit on System Approvals for Nonbanking Acquisitions

The proposed draft takes several other steps to ease the burden on bank holding companies that seek approval to engage in permissible activities. Currently, a bank holding company that seeks approval to engage in a nonbanking activity must commence the activity within one year of receiving System approval or the approval lapses. This requirement is not legally required and elimination of this requirement would allow a bank holding company to seek a single approval to engage *de novo* in all permissible nonbanking activities, thereby greatly reducing the filing burden on bank holding companies.

This change would significantly reduce burden by eliminating the filing of multiple applications to engage in permissible nonbanking activities and by permitting bank holding companies quickly to respond to a decision to compete in a permissible nonbanking activity. Moreover, this change would focus the filing requirement on *acquisitions* of nonbanking companies, which are the types of proposals that have the most significant effects on most organizations.

The Board originally imposed the time limit on its approvals in order to address concern that the financial and other resources of a bank holding company could change between the time that the System approved a proposal and commencement of the activity by the holding company. This concern would appear to be minimal in the case of proposals by a bank holding company to engage *de novo* in a permissible activity. To address this concern, the proposed revision would provide that an approval to engage *de novo* in an activity would not expire so long as the bank holding company continues to have adequate capital and at least satisfactory composite and management examination ratings.

6. Revision of Policy Statement Governing Investment Advisory Activities

In 1972, the Board permitted bank holding companies to provide investment advice to mutual funds and other investment companies. In connection with that determination, the Board adopted a policy statement outlining a number of restrictions that the Board believed were necessary to address the potential that the investment advisory activities of bank holding companies may result in the ''subtle hazards'' that the Glass-Steagall Act was designed to prevent. In 1992, the Board substantially revised the policy statement to remove many of the restrictions on investment advisory activities to conform with various court decisions and developments in the market that had occurred since the policy statement was adopted. On August 23, 1996, the Board also amended this policy statement to allow a bank holding company to purchase, as fiduciary, shares of a mutual fund advised by the holding company where the purchase of shares is permitted by the fiduciary agreement, relevant state law or court order. In addition, the Board rescinded a letter issued in 1986 (the ''Sovran letter'') that governs the manner in which a bank holding company may act as broker in the sale of mutual fund shares to bank customers.

The Board proposes to remove four restrictions that remain in the policy statement. These restrictions are:

- A prohibition on a bank holding company owning any shares of a mutual fund advised by the bank holding company;
- A prohibition on a bank holding company lending to a mutual fund advised by the bank holding company;
- A prohibition on a bank holding company accepting shares of a mutual fund that it advises as collateral for any loan to a customer that is for the purpose of purchasing such mutual fund shares; and
- A prohibition on a bank holding company serving as an investment adviser to an investment company or mutual fund that has a name that is similar to, or a variation of, the name of the bank holding company or any of its subsidiary banks.

None of these four restrictions is specifically required by the Glass-Steagall Act. The first restriction was intended to assure that a bank holding company does not, in violation of the Glass-Steagall Act, control a mutual fund that it advises. Removal of this prohibition would allow a bank holding company to acquire up to 5 percent of the shares of a mutual fund, which is the limit contained in the BHC Act for investments by bank holding companies in the voting shares of any company. This modest investment amount would not appear to enhance significantly the ability of a bank holding company to control a mutual fund it advises. The federal securities laws require, for example, that the board of directors of a mutual fund maintain at least a majority of directors that are independent of the investment adviser, and it is these directors that must review and approve the continued service of the investment adviser.

The second limitation governs loans by a bank holding company to an investment company advised by the bank holding company. In 1982, section 23A of the Federal Reserve Act, which establishes quantitative and qualitative limitations on the lending activities of banks, was amended to cover these types of lending transactions by banks. Section 23A would permit a bank to lend to a mutual fund advised by the bank or an affiliate within the overall limits that apply to loans by banks to affiliates. In light of section 23A, a complete prohibition on these lending activities by a bank holding company—which does not lend insured funds—does not appear necessary and the Board proposes to remove this restriction.

The third limitation prohibits a bank holding company from accepting as collateral for a loan shares of an investment company that the holding company advises where the purpose of the loan is to purchase the investment company shares. Section 23A limits the ability of banks to accept these shares as collateral for a loan from the bank. This restriction in section 23A was intended to address potential safety and soundness concerns that could result from allowing an insured institution to accept shares of a related mutual fund as collateral for a loan. A bank holding company, on the other hand, does not lend insured funds. Moreover, the collateral and other requirements in

section 23A do not apply to loans by bank holding companies. Accordingly, the Board seeks public comment on permitting bank holding companies and their nonbanking affiliates to extend credit that is collateralized by shares of investment companies that the bank holding company advises.

The fourth restriction raises an issue regarding the potential for customer confusion about whether shares of investment companies are federally insured. The Board's rule prohibits bank holding company from having a name that is ''similar to, or a variation of'' a mutual fund or investment company advised by the holding company or any of its subsidiary banks. This rule is stricter than the rule adopted by the Comptroller of the Currency for national banks, which permits a national bank to advise an investment company with a name that is similar to the name of the bank provided that the name is not identical to the bank's name. The Board's rule is also stricter than the position of the SEC, which permits an investment company to have a name similar to that of an insured depository institution provided that the investment company makes a number of disclosures that advise customers that the investment company is not federally insured or guaranteed by the insured depository institution.[7]

The Board seeks comment on amending its rule to permit similar names so long as: (1) The investment company name is not identical to that of the holding company or an affiliated insured depository institution, (2) the investment company name does not include the term *bank*, and (3) the holding company or investment company discloses to customers in writing that shares of the investment company are not federally insured and are not obligations of or guaranteed by any insured depository institution, and the role of the bank holding company as an adviser to the investment company. The Board seeks comment on whether these limitations would adequately address the potential for customer confusion that shares of an investment company advised by a bank holding company are not federally insured.

7. Revision to Exception for Acquisitions of Lending Assets in the Ordinary Course of Business

The Board also proposes to update the regulatory language permitting a bank holding company, without additional approval, to acquire lending assets from a third party in the ordinary course of business. The Board currently permits a bank holding company, without additional approval, to acquire assets of an office of another company related to making, acquiring or servicing loans so long as the bank holding company and the transaction meet certain qualifications. Among the qualifications are that the assets relate to consumer or mortgage lending, and that the acquired assets represent the lesser of $25 million or 25 percent of the consumer lending, mortgage banking or industrial banking assets of the acquiring bank holding company. The office must also be located in the geographic area served by the bank holding company.

The Board proposes to revise this provision in three ways. First, since the Board no longer limits the geographic scope of its approval to engage in nonbanking activities, this restriction would be removed. Second, the scope of the exception would be broadened from consumer and mortgage banking assets to permit the acquisition of assets related to any lending activity. Third, the threshold limits would be raised to permit the acquisition of assets representing up to the lesser of $100 million or 50 percent of the lending assets of the bank holding company.

The Board invites public comment on these revisions.

E. Explanation of the Restrictions Removed From Permissible Nonbanking Activities

As noted above, the Board proposes to remove restrictions contained in the current regulation that are outmoded, have been superseded by Board order or would not apply to an insured depository institution conducting the same activity. The limitations that remain are necessary to establish a definition of the permitted activity or to prevent circumvention of another statute, such as the Glass-Steagall Act. The following discussion explains, by functional group of activities, the restrictions that the Board proposes to eliminate as well as, the limitations that the Board proposes to retain.

The Board seeks comment on all aspects of its proposed changes to the Regulation Y laundry list. In particular, comment is invited on whether the activities are properly defined and whether, as defined, each activity is closely related to banking for purposes of section 4(c)(8) of the BHC Act. Comment is also invited on new activities that the Board should consider including on the regulatory laundry list. Comments regarding new activities should explain the basis for finding that the activity is closely related to banking for purposes of the BHC Act.

The Board invites comment on whether the restrictions on nonbanking activities that are proposed to be retained are adequate to address potential adverse effects from the conduct of the relevant activity, including potential conflicts of interests and customer confusion. In addition, the Board seeks comment on whether supervisory policy statements are adequate for addressing potential adverse effects that may be associated with certain activities, and the type of guidance that should be provided in such a policy statement.

1. Extending Credit and Servicing Loans

Lending activities are already broadly defined and contain no restrictions.

2. Activities Related to Extending Credit

A new category has been added authorizing activities that the Board determines to be usual in connection with making, acquiring, brokering or servicing loans or other extensions of credit. Without limiting the scope of this activity, the category lists a number of activities that the Board has previously determined are related to credit extending activities, including, by way of example, credit bureau, collection agency, appraisal, asset management, check guarantee, and real-estate settlement activities. Restrictions governing disclosures, tying, preferential treatment of customers of affiliates, disclosure of confidential customer information without customer consent and similar restrictions have been removed from these activities. These restrictions do not apply to banks that conduct these activities and, to the extent these restrictions are appropriate, supervisory guidance on the conduct of the activity would be developed.

3. Leasing Personal or Real Property

The leasing provision of the regulation was streamlined by combining the two types of leasing activities permissible for bank holding companies: Full-payout leasing and high residual value leasing.[8] The

[7] Letter of May 13, 1993, (1993 Transfer Binder) Fed. Sec. L. Rep. (CCH) Paragraph 76,683.

[8] A full-payout lease is the functional equivalent of an extension of credit and relies primarily on rental payments and tax benefits to recover the cost of the leased property and related financing costs. High residual value leasing may involve significant reliance on the expected residual value of the leased property—on average, under 50 percent, but in some cases, up to the full original cost of leased property—to recoup the cost of the leased property and related financing costs. Under the Board's regulation, bank holding companies may provide full-payout leases for any type of personal property or real property, and may make high residual value leases only for personal property. Bank holding companies have not been permitted to engage in high residual value leasing for real property because

Continued

following restrictions have been removed—

- The lease must serve as the functional equivalent of an extension of credit (permissible high residual value leasing may *not* be the functional equivalent of an extension of credit);
- The property must be acquired only for a specific leasing transaction;
- Leased property must be re-leased or sold within 2 years of the end of each lease;
- The maximum lease term may not exceed 40 years; and
- No leased property may be held for more than 50 years.

These restrictions were removed from the regulation primarily to permit bank holding companies greater flexibility to acquire property in quantity in the expectation of leasing activities and to grant more flexibility in selling or releasing property at the expiration of a lease. It is expected that supervisory guidance would be developed to aid examiners in supervising the acquisition and retention of property for leasing.

The draft also removes the provision limiting to 100 percent of the initial acquisition cost the amount of reliance that may be placed on the residual value of leased personal property. No such limit applies to national bank leasing activities. The estimated residual value of real property continues to be limited to 25 percent of the value of the property at the time of the initial lease. This restriction is intended to distinguish real property leasing from real estate development and investment activities.

Two other requirements were retained: (1) That the lease be non-operating, and (2) that the initial lease term be at least 90 days. These requirements were developed in the course of litigation regarding the leasing activities of national banks, and were relied on by the courts in distinguishing bank leasing activities from general property rental and real estate development businesses. The requirement that a lease be non-operating is also a statutory requirement limiting the high residual value leasing activities of national banks.[9] In particular, the definition of nonoperating leases in the automobile rental context, which was developed in litigation and prevents a bank holding company from directly providing repair and similar services, has been retained. The draft would permit a bank holding company to arrange for a third party to provide repair and other services in connection with a lease.

4. Operating Nonbank Depository Institutions

This category permits ownership of a savings association and an industrial loan company. The proposed regulation retains the restrictions in the BHC Act that the institution not be operated as a ''bank'' for purposes of the BHC Act[10] and that the activities of the institution conform to the relevant statutory provisions of the BHC Act.

5. Trust Company Functions

The current regulation limits the deposit-taking and lending activities of trust companies. These limitations are already encompassed in the requirement in the BHC Act that the trust company not be a ''bank'' for purposes of the BHC Act, and have, therefore, been deleted from the regulation.

6. Financial and Investment Advisory Activities

The regulation has been reorganized to group together all investment and financial advisory activities. The proposed rule broadly authorizes acting as investment or financial adviser to any person, without restriction. The proposed definition of *investment* and *financial advisory activities* is very broad and would permit some types of advisory activities beyond the scope of advisory activities currently permitted by regulation. The Board invites comment on whether this activity has been properly defined and whether all investment and financial advisory activities are closely related to banking.

Without limiting the breadth of the advisory authority, the rule also lists as specific examples of permissible advisory activities certain types of investment or financial advice, counseling and related services that previously had been separately authorized. These examples are—

- Advising an investment company and sponsoring, organizing and managing a closed-end investment company;
- Furnishing general economic information and forecasts;
- Providing financial advice regarding mergers and similar corporate transactions;
- Providing consumer educational courses and providing tax-planning and tax-preparation; and
- Providing advice regarding derivatives transactions.

The few restrictions imposed by the Board on these activities would be removed. Specifically, the Board proposes to remove the current restriction that discretionary investment advice be provided only to institutional customers, thereby allowing bank holding companies to manage retail customer accounts outside of the trust department of an affiliated bank. This activity would continue to be governed by the fiduciary principles in relevant state law. Similarly, the requirement that investment advice regarding derivatives transactions be provided only to institutional investors would be removed, thereby allowing this advice to be provided to retail customers. These restrictions do not apply to banks that provide investment advisory services.

Restrictions also have been deleted in the areas of tax-planning and preparation services and consumer counseling services that prohibited bank holding companies from promoting specific products and services and from obtaining or disclosing confidential customer information without the customer's consent. These restrictions do not apply to banks that engage in these activities.

7. Agency Transactional Services for Customer Investments

The various transactional services that a bank holding company may provide as agent have been reorganized into a single functional category. This category includes securities brokerage activities, private placement activities, riskless principal activities, execution and clearance of derivatives contracts, foreign exchange execution services and other transactional services.

i. *Securities brokerage activities.*

The current regulation differentiates between securities brokerage services provided alone (*i.e.*, discount brokerage services) and securities brokerage services provided in combination with investment advisory services (*i.e.*, full-service brokerage activities). The proposed rule would authorize securities brokerage without distinguishing between discount and full-service brokerage activities.

Under the current regulation, bank holding companies providing full-service brokerage services must make certain disclosures to customers regarding the uninsured nature of securities and may not disclose confidential customer information without the customer's consent. These requirements have been deleted. The disclosure requirements—along with a number of other requirements that specifically address the potential for

of concern that such leasing would be indistinguishable from real estate development and investment activities.

[9] As a general matter, the requirement that a lease be *non-operating* means that the bank holding company does not itself operate the equipment or property being leased or repair or service the property. This limitation was intended to help distinguish bank leasing activities from general commercial activities.

[10] The BHC Act contains an exception from the definition of ''bank'' for industrial loan companies and savings associations that meet requirements listed in the BHC Act.

customer confusion, training requirements, suitability requirements and other matters—are already contained in an interagency policy statement that governs the sale of securities and other non-deposit investment products on bank premises as well as in rules adopted by the SEC. In addition, similar disclosure requirements are required by the Board's policy statement governing the sale by bank holding companies of shares of mutual funds and other investment companies that the bank holding company advises. To the extent that disclosures to customers are appropriate in areas not covered by these policy statements, it is expected that the Board would develop supervisory guidance, on an interagency basis where appropriate.

The Board seeks comment on whether elimination of these restrictions from the regulation would lead to adverse effects, including customer confusion about the uninsured nature of non-deposit investment products sold through bank holding companies.

ii. *Riskless principal activities.*

The Board recently reduced the restrictions that govern riskless principal activities. The restrictions that were retained were designed to ensure that bank holding companies does not avoid the Glass-Steagall Act provisions by classifying underwriting and dealing activities as riskless principal activities. The provisions that are proposed to be retained prohibit:

- Selling bank-ineligible securities at the order of a customer who is the issuer or in a transaction in which the bank holding company has an agreement to place the securities of the issuer;
- Acting as riskless principal in any transaction involving a bank-ineligible security for which the bank holding company or an affiliate makes a market;
- Acting as riskless principal for any bank-ineligible security carried in the inventory of the bank holding company or any affiliate; and
- Acting as riskless principal on behalf of any U.S. affiliate that engages in bank-ineligible securities underwriting or dealing activities or any foreign affiliate that engages in securities underwriting or dealing activities outside the U.S.

The proposed regulation retains these four restrictions. The Board requests comment on whether these restrictions, and in particular the second and third restrictions, are necessary to assure compliance with the Glass-Steagall Act.

iii. *Private placement activities.*

In adding private placement activities to the laundry list, the regulation adopts the definition of private placement activities used by the SEC and the federal securities laws. All but one restriction that had been imposed by Board order on the conduct of this activity would be removed. That restriction prohibits a bank holding company from purchasing for its own account securities that it is placing and from holding in inventory unsold portions of securities it is attempting to place. This restriction prevents a bank holding company from classifying its securities underwriting activities, which are governed by the Glass-Steagall Act and the Board's section 20 decisions, as private placement activities.

Among the restrictions that would be removed from the conduct of private placement activities are prohibitions on:

- Extending credit that enhances the marketability of a security being placed;
- Lending to an issuer for the purpose of covering the funding lost through the unsold portion of securities being placed;
- Lending to the issuer for the purpose of repurchasing securities being placed;
- Acquiring securities through an account for which the bank holding company has fiduciary authority;
- Providing advice to any purchaser regarding a security the bank holding company is placing; and
- Placing securities with any non-institutional investors (the SEC rules allow sales to institutional investors and up to 35 non-institutional investors).

None of these restrictions have been applied to national banks that conduct private placement activities. The Board seeks comment on whether any of these restrictions must be retained to address potential adverse effects, including potential conflicts of interest or customer confusion, or to assure fulfillment of fiduciary duties.

iv. *Futures commission merchant activities.*

a. In general. The current regulation authorizes bank holding companies to execute and clear derivatives on certain financial instruments on major exchanges, subject to a number of restrictions.

The Board has, by order, broadened this authority in two key respects. First, the Board has by order permitted bank holding companies to execute and clear derivative contracts on a broad range of nonfinancial commodities. Second, the Board has permitted bank holding companies to clear derivative contracts without simultaneously providing execution services. The proposed regulation has been amended to incorporate these actions.

The proposal also deletes the restriction that a bank holding company not act as a futures commission merchant (FCM) on any exchange unless the rules of the exchange have been reviewed by the Board. All U.S. commodities exchanges are supervised by the CFTC. A review by the Federal Reserve System of the rules of an exchange, whether domestic or foreign, does not provide a reliable guide regarding the risk management systems of the exchange or the safety of conducting FCM activities on the exchange. A more effective method for addressing the risks of FCM activities—whether on domestic or foreign exchanges—is through the on-site inspection and supervision of the risk management systems of the bank holding company.

The proposed rule removes several other requirements, including that the FCM subsidiary—

- Time stamp all orders and execute them in chronological order;
- Not trade for its own account;
- Not extend margin credit to customers; and
- Maintain adequate capital.

As noted above, the Board is proposing to remove restrictions on subsidiary FCM trading for its own account, and conduct in the other areas listed above is addressed in rules of the CFTC or the relevant self-regulatory organization.

The proposed rule retains the requirements of the current regulation that a bank holding company conduct its FCM activities through a separately incorporated subsidiary (*i.e.*, not through the parent bank holding company) and that the subsidiary not become a member of an exchange that requires the parent bank holding company also to become a member of the exchange. The purpose of this restriction is to limit the bank holding company's exposure to contingent obligations under the loss sharing rules of exchange clearing houses in order to preserve the holding company's ability to serve as a source of strength to its subsidiary insured depository institutions.

The Board invites comment on all aspects of its proposed revision to FCM activities. In particular, the Board invites comment on whether the requirement limiting the parent bank holding company from becoming a member of an exchange is appropriate and on whether the Board's concern could be addressed more effectively by an alternative restriction, such as a requirement that the parent bank holding company not provide a guarantee of non-proprietary trades conducted by an FCM subsidiary. A restriction on the holding company providing such a guarantee has been imposed on bank holding companies through examination guidance and various Board orders to assure that the capital of the holding company is

available to support the insured depository institution subsidiaries of the holding company.

b. Proposed change in Board precedent regarding clearing-only activities. The Board has by order permitted bank holding companies to clear trades that the FCM has not executed itself. The proposed rule incorporates this activity in the laundry list, retaining two restrictions currently imposed by Board order. The first restriction prohibits the clearing subsidiary from serving as the primary or qualifying clearing firm for a customer. The second restriction is that the clearing subsidiary have a contractual right to decline to clear any trade that the subsidiary believes poses unacceptable risks.

These requirements were adopted to ensure that the clearing subsidiary of a bank holding company could limit its exposure to traders that execute trades themselves or through third parties. In particular, these requirements prevent a bank holding company from clearing trades executed by exchange locals or market makers. In 1991, the Board rejected a proposal by a bank holding company to engage in clearing trades for exchange locals and market makers because of concerns about the inability of the bank holding company to monitor and control its credit exposures during the trading day.[11] The Board found that the activity was closely related to banking, but believed that the potential adverse effects of conducting the activity outweighed the potential public benefits.

The Board seeks comment on whether these two restrictions on the conduct of clearing-only activities by bank holding companies should be retained or whether bank holding companies, as part of permissible FCM activities, should be permitted to engage in clearing without executing trades, including clearing trades for professional traders. In particular, the Board invites comment on whether and how bank holding companies are able to monitor and limit adequately the potential exposure from conducting this activity.

v. *Other transactional services.*

In addition to the transactional services described above, the proposed rule adds a provision allowing a bank holding company to provide transactional services for customers involving any derivative or foreign exchange transaction that a bank holding company is permitted to conduct for its own account.

[11] *Stichting Prioriteit ABN AMRO Holding,* 77 Federal Reserve Bulletin 189 (January 9, 1991).

The proposed rule also removes the restriction in the current regulation prohibiting a bank holding company from providing foreign exchange transactional services in the same subsidiary that provides advice regarding foreign exchange. Banks are not subject to this restriction. With this change, a bank holding company would be permitted to provide any transactional service to any customer in combination with a related advisory service, and may provide any advisory and transactional services as agent to both retail and institutional customers.

8. Investment Transactions as Principal

The proposal incorporates decisions by the Board that permit bank holding companies broadly to invest for the holding company's own account as principal in derivatives on financial and nonfinancial commodities. The proposal would allow a bank holding company to trade as principal for its own account any derivative contract on a financial or nonfinancial commodity or index of commodities, so long as any one of three conditions is met:

- The underlying asset is a permissible investment for State member banks;
- The derivative contract requires cash settlement; or
- The derivative contract allows for assignment, termination or offset prior to expiration and the bank holding company makes every reasonable effort to avoid delivery.

The proposal also includes authority that the Board has previously granted by order permitting bank holding companies to buy, sell and store gold, silver, platinum and palladium bullion, coins, bars and rounds. The regulation retains the current authority to trade in foreign exchange and bank-eligible securities. The proposal does not expand the current authority of bank holding companies to acquire as principal securities or physical commodities that a bank is not currently permitted to own for its own account.

In several areas, such as foreign exchange trading and certain derivatives trading, the Board has prohibited bank holding companies from engaging in the same subsidiary in trading activities as principal and providing advice to customers. This restriction does not apply to banks that conduct the same activities and has been removed. It is expected that supervisory guidance would be developed to address potential conflicts of interest that may arise in this area.

9. Management Consulting and Counseling Activities

The current regulation authorizes bank holding companies to provide management consulting services on any matter to any depository institution or affiliate of a depository institution. The rule has been expanded in two respects.

First, bank holding companies would be authorized to provide management consulting services regarding financial, economic, accounting or audit matters to any company. These activities are directly related to the activities and expertise of bank holding companies. The Board invites comment on whether this activity is closely related to banking for purposes of section 4(c)(8) of the BHC Act.

Second, a bank holding company would be permitted to derive up to 30 percent of its management consulting revenue from management consulting services provided to any customer on any matter.

Two restrictions have been retained—governing interlocks with and investments in client companies—to ensure that a bank holding company does not exercise control over a client company through a management consulting contract.

10. Support Services

This category includes courier services (other than armored car services) and printing checks and related documents. Both services are included in the laundry list as they were authorized by the Board, without change.

11. Insurance Agency and Underwriting Activities

The insurance provisions reflect the detailed restrictions on insurance activities of bank holding companies specified in the BHC Act. The current regulation has not been changed.

Community Development Activities

The current regulation permits bank holding companies to make equity and debt investments in corporations and projects designed primarily to promote community welfare. The proposal amends the description of this activity to clarify that this activity includes providing advisory and related services to community development programs. The Board has permitted these advisory services by order.

13. Money Orders, Savings Bonds and Traveler's Checks

The current regulation limits the sale and issuance of money orders and similar consumer payment instruments to instruments with a face value of less

than $1,000. The Board has by order authorized this activity for payment instruments of any face amount. Accordingly, the limitation on the face amount of these instruments has been removed.

14. Data Processing Activities

The current regulation broadly authorizes bank holding companies to provide data processing and data transmission services by any technological means so long as the data processed or furnished are financial, banking or economic. The proposed rule clarifies that a bank holding company may render advice to anyone on processing and transmitting banking, financial and economic data.

The following two restrictions on permissible data processing activities have been deleted:

- All data processing services must be provided pursuant to a written agreement with the third party that describes and limits the services; and
- Data processing facilities must be designed, marketed and operated for processing and transmitting financial, banking or economic data.

The data processing activity has also been revised to permit bank holding companies to derive up to 30 percent of their data processing revenues from processing and transmitting data that are *not* financial, banking or economic.

F. Explanation of Changes to Tying Rules

The Board is proposing amendments to its rules regarding tying arrangements. The amendments would allow bank holding companies significantly greater flexibility to package their products, and thereby provide more efficient and lower cost service to their consumers.

Tying arrangements, where a customer's ability to purchase or receive a discount on one product is tied to the customer's purchase of another product, are prohibited by section 106 of the Bank Holding Company Act Amendments of 1970. Although section 106 applies only when a *bank* offers the tying product, the Board in 1971 extended its special restrictions to bank holding companies and their nonbank subsidiaries. 36 FR 10,777 (June 3, 1971).

The Board has authority to grant exceptions to section 106 and, in the past few years, has used its exemptive authority to allow banks to offer products to their customers more efficiently and at lower cost, without risk of anti competitive effects. For example, the Board has allowed arrangements that included discounts on brokerage services and other products based on a customer's relationship with the bank or bank holding company. The proposed amendments set forth below would build on this recent history in attempting to identify broader categories of packaging arrangements that do not raise the concerns that section 106 was intended to address and should therefore be permitted.

Section 106 contains five restrictions intended to prohibit anti-competitive behavior by banks: two prohibit tying arrangements; Two prohibit reciprocity arrangements; and one prohibits exclusive dealing arrangements. The tying restrictions, which have the greatest effect on industry practices, prohibit a bank from restricting the availability or varying the consideration for one product or service (the ''tying'' product) on the condition that a customer purchase another product or service offered by the bank or by any of its affiliates (the ''tied'' product).[12]

Section 106 is a broader prohibition than those contained in the antitrust laws because, unlike the antitrust laws, a plaintiff in action under section 106 need not show that: (1) the seller has market power in the market for the tying product; (2) the tying arrangement has had an anti-competitive effect in the market for the tied product; or (3) the tying arrangement has had a substantial effect on interstate commerce. The broader reach of section 106 is most evident in that it prohibits a bank from varying the consideration for one of its products—that is, offering a discount on one of its products—for customers who purchase a second product from the bank or its affiliates. Such an arrangement generally would not be prohibited by the antitrust laws.

Section 106 was adopted in 1970 when Congress expanded the authority of the Board to approve bank holding companies to engage in nonbanking activities. Section 106 was based on Congressional concern that banks' unique role in the economy, in particular their power to extend credit, would allow them to gain a competitive advantage in the new, nonbanking markets that their affiliates were being allowed to enter. *See* S. Rep. No. 1084, 91st Cong., 2d Sess. (1970). Congress therefore imposed special limitations on tying by banks—restrictions beyond those imposed by the antitrust laws.

1. Rescind the Board's Regulatory Extension of the Statute

As noted above, the Board has by regulation extended the restrictions of section 106 to bank holding companies and their nonbank subsidiaries as if they were banks. This extension was adopted at the same time that the Board approved by regulation the first ''laundry list'' of nonbanking activities under section 4(c)(8) of the BHC Act, apparently as a prophylactic measure addressed at potential anti-competitive practices by companies engaging in nonbanking activities.

In the past 25 years, the Board has gained extensive experience with nonbank affiliates of bank holding companies and the markets in which they operate. Based on this experience, the Board does not believe that these nonbank companies possess the market power over credit or other unique competitive advantages that Congress was concerned that banks enjoyed in 1970. Bank holding companies may never have possessed such market power but, even if they once did, financial services markets have generally become much more competitive over time. Accordingly, the Board believes that applying the special bank anti-tying rules to such companies is no longer justified. Any competitive problems that might arise would be isolated cases, better addressed not through a special blanket prohibition but rather through the same general antitrust laws that bind their nonbank competitors.

In recognition of these facts, the Board has over the past several years relaxed the anti-tying restrictions on nonbanks within bank holding companies. In addition to adopting various exceptions that applied both to banks and nonbanks, the Board in 1994 permitted a bank holding company or its nonbank subsidiary to offer a discount on any of its products or services on the condition that a customer obtain any other product or service from that company or from any of its *nonbank* affiliates—that is, permitted discount arrangements that did not involve a bank. 12 CFR 225.7(b)(3). However, even with this exception, tying between a bank holding company or its nonbank subsidiary and an affiliated bank is still restricted, as is any inter-affiliate tying arrangement that does not involve the offering of a discount.

The Board proposes to rescind its regulatory extension of the anti-tying

[12] Violations of section 106 may be redressed through: (1) An enforcement action for civil money penalties brought by the appropriate Federal banking agency, (2) an action for injunctive relief brought by the Justice Department or any person who can show ''danger of irreparable loss or damage,'' or (3) a civil suit brought by ''any person who is injured in his business or property'' by the prohibited arrangement, with the court directed to award treble damages and attorneys fees if the plaintiff prevails. *See* 12 U.S.C. 1972(2)(F), 1973, 1975.

rules to nonbanks. The Board notes that in doing so it would not be granting an ''exception'' to section 106—as section 106 never envisioned that non-banks would be covered in the first place. Rather, the Board would be lifting a restriction that it itself imposed, and one which it believes should be maintained only if there is clear evidence of its necessity.

Removal of these special restrictions on bank holding companies and their nonbank subsidiaries would eliminate a competitive disadvantage by allowing them the same freedom to package products that their competitors currently enjoy. The Sherman Act would continue to prohibit bank holding companies and their subsidiaries from engaging in any tying arrangement that had an anti-competitive effect. 15 U.S.C. 1. Furthermore, section 106 would continue to prohibit a bank from tying one of its products to a product offered by one of its affiliates, bank or nonbank.

The Board is seeking comment, however, on whether it should retain its regulatory extension of the statute for purposes of one type of tying arrangement. Section 825(a)(3) of the Personal Responsibility and Work Opportunity Reconciliation Act of 1996, signed into law on August 22, 1996, amended the Food Stamp Act of 1997 to prohibit tying the availability of electronic benefit transfer services to other point-of-sale services. Enforcement of the Act is assigned to the Secretary of Agriculture. 104 Pub. L. 193, 110 Stat. 2105; 7 U.S.C. 2016(i)(11). Banks, bank holding companies, and nonbank subsidiaries of bank holding companies were exempted from the statute, apparently because they were already restricted by section 106 (in the case of banks) and the Board's regulation (in the case of bank holding companies and their nonbank subsidiaries). Thus, unless the Board were to retain a restriction on bank holding companies and their nonbank subsidiaries, they would be the only companies not subject to a special restriction on tying of electronic benefit transfer services.

2. Treat Inter-Affiliate Tying Arrangements the Same as Intra-Bank Arrangements

The Board is also proposing to broaden a statutory exception designed to preserve traditional banking relationships. The statutory exception is limited to traditional banking relationships within one bank, and the proposed regulatory exception would extend the statutory exception to apply to relationships that involve more than one bank or other affiliate.

Section 106 contains an explicit exception (the ''statutory traditional bank product exception'') that permits a bank to tie any product or service to a loan, discount, deposit, or trust service offered by that bank. 12 U.S.C. § 1972(1)(A). For example, a bank could condition the use of its messenger service on a customer's maintaining a deposit account at the bank. Although the statutory traditional bank product exception appears to have been effective in preserving traditional relationships between customer and bank, the exception is limited in an important way: it does not extend to transactions involving products offered by affiliates. Thus, a bank could not condition the use of its messenger service on a customer's maintaining a deposit at an affiliated bank. As another example, the Board recently granted an exemption to allow a secured credit card program where a bank required that a customer maintain a deposit at an affiliated bank. Although a bank could have offered a secured credit card program conditioned on a customer's maintaining a deposit at that same bank, the inter-affiliate arrangement was otherwise prohibited by section 106 but for the exemption.

The Board has already adopted a ''regulatory traditional bank product exception'' that generally extends the statutory traditional bank product exception between affiliates—for example, allowing one bank to offer a *discount* on a loan based on a customer's deposit relationship with an affiliated bank. However, taking an incremental approach, the Board placed two restrictions on the regulatory exception. First, the Board required that both products involved in the tying arrangement be traditional bank products (thereby disqualifying the messenger service example above). Second, the Board required that the arrangement consist of discounting the tying product rather than restricting its availability (thereby disqualifying the secured credit card example above).

The Board believes that there remains a rationale for the latter restrictions—for example, secured credit cards aside, there are few examples where restricting the availability of one product on the purchase of another serves a valid economic purpose.[13] Nonetheless, Congress has already decided not to apply these restrictions to the statutory traditional bank product exception for intra-bank transactions, and it is difficult to argue that inter-affiliate transactions pose any greater risk of anti-competitive behavior than intra-bank transactions. Moreover, Congress has already extended the statutory traditional bank product exception between affiliates, without restriction, for savings associations and their affiliates. 12 U.S.C. 1464(q)(1)(A).

3. Extend the Expanded Regulatory Traditional Bank Product Exception to Reciprocity Arrangements

As noted above, section 106 prohibits not only tying arrangements (conditioning the availability of one product on the purchase of another) but also reciprocity arrangements (conditioning the availability of one product on the providing of another by the customer). 12 U.S.C. 1972(1) (C) and (D). Like the tying prohibition, the prohibition on reciprocity arrangements contains an exception intended to preserve traditional banking relationships. The exception provides that a bank may condition the availability of a loan, discount, deposit or trust service on the customer's providing some product or service ''related to, and usually provided in connection with'' such a loan, discount, deposit or trust service. 12 U.S.C. 1972(1)(C).

Also like the statutory traditional bank product exception to the tying prohibition, this exception to the reciprocity prohibition does not apply to inter-affiliate transactions. Although the Board has received only one request to extend the exception—probably because this exception is confusing and rarely invoked in the case law—the Board is proposing such an extension for comment, for the same reasons noted above.

4. Coverage of Foreign Banks Under Section 106

A petitioner has sought an interpretation or exemption from the statute to clarify that section 106 does not restrict ''foreign transactions.'' Petitioner argues that statutes are generally presumed not to have an extra-territorial reach unless specified by Congress, and that no specification was made in section 106. Petitioner

[13] The Board has recently been presented with another case where restricting the availability of a product may be justifiable. A petitioner has sought an exemption from section 106 to allow a brokerage subsidiary of a bank holding company to require a customer to maintain a deposit at an affiliated bank in order to facilitate compliance with the time-for-payment requirements of Regulation T. Even if the Board were to rescind its regulatory extension of section 106 to bank holding companies and their nonbank subsidiaries, a brokerage department of a bank would still be prohibited from imposing this requirement, absent the proposed amendment to the traditional bank product exception.

notes that if section 106 did apply, U.S. firms would be at a competitive disadvantage, as there is no equivalent to section 106 in other nations.

The Board seeks comment on whether it should establish a ''safe harbor'' to provide certainty with respect to foreign transactions. In particular, the Board seeks comment on whether any safe harbor should define ''foreign transactions'' according to the location of the customer (as suggested by petitioner), the location of the market where any potential anti-competitive effects would occur (as appears to be the practice under the Sherman Act), or some other factor or factors.

G. Explanation of Other Proposed Changes

1. Bank Holding Company Formations

Regulation Y currently implements the provisions enacted in the Riegle Community Development Act that establish a streamlined 30-day notice procedure for proposals by existing shareholders of a bank to establish a bank holding company. To qualify for this procedure under current rules, the shareholders of the bank must acquire at least 80 percent of the shares of the new bank holding company in substantially the same proportion as the shareholders' bank ownership, must certify that the shareholders are not subject to any supervisory or administrative action, and must identify the shareholders of the new bank holding company.

The Board proposes several changes to these requirements. First, the Board proposes to reduce the percentage of the bank holding company that must be owned by shareholders of the bank from 80 to 67 percent. This level assures that the transaction is in fact a reorganization in which the bank shareholders continue to control the new bank holding company and minimizes the likelihood that a new controlling shareholder will be introduced without adequate review.

Next, the proposal would require that only the principal shareholders (*i.e.*, shareholders owning in excess of 10 percent of the bank holding company) certify that they are not subject to any supervisory or administrative action, rather than requiring that all shareholders make this certification. Finally, the proposal would eliminate any publication requirement for this category of bank holding company formations. The Riegle Act does not require publication of these proceedings and, because these transactions represent a corporate reorganization, little purpose is served by requiring public notice. The System would continue to consider all of the same statutory factors in reviewing these proposals, including considering the competitive effects, financial and managerial resources of the organization, effect on the convenience and needs of the community and the CRA performance record of the bank.

The Board invites comment on whether these changes are appropriate, would reduce unnecessary burden on the formation of new bank holding companies—particularly small bank holding companies—and are consistent with the provisions of the BHC Act permitting this expedited procedure.

2. Change in Bank Control Act Filings

The Board proposes to reorganize, clarify and simplify the portion of Regulation Y that implements the Change in Bank Control Act (CIBC Act). The proposal attempts to harmonize the scope and procedural requirements of the Board's regulation implementing the CIBC Act with those of the other federal banking agencies and to reduce any unnecessary regulatory burden. The proposal also incorporates various interpretations of this subpart made by the Board since the last revision of Regulation Y. These changes have been developed in consultation with the other federal banking agencies in an effort to develop a uniform regulatory approach to implementing the CIBC Act at all of the banking agencies.

Currently, the Board's rules generally require any person (other than a bank holding company) seeking to acquire shares of a state member bank or bank holding company to file a notice under the CIBC Act at two thresholds: when the person's ownership level exceeds 10 percent of the voting shares of the bank or bank holding company, and again when the ownership level exceeds 25 percent. This two-tiered approach allowed a review of the financial resources of an acquiror at two stages, with a lesser showing of financial resources required for transactions below the 25 percent threshold.

The Board proposes to reduce regulatory burden by eliminating the 25 percent threshold. This eliminates the requirement that persons who have received authorization to own in excess of 10 percent, but less than 25 percent, of the voting shares of a member bank or bank holding company file a second notice before owning 25 percent or more of the voting shares of the institution. Persons who initially acquire in excess of 25 percent of the shares of a bank or bank holding company would continue to be subject to only one review under the CIBC Act. The other federal banking agencies have already adopted this approach.

Under the proposal, persons who *currently* own 10 percent (but less than 25 percent) of the shares of a state member bank or bank holding company with Board approval under the CIBC Act would be exempt from further filing requirements under the CIBC Act, unless otherwise notified in writing by the System. In future cases in which a person appears to have sufficient financial resources to acquire more than 10 percent, but less than 100 percent of the shares of a bank, the System may limit the approval granted on a case-by-case basis to require further review of the financial resources of the person as appropriate.

The proposal also adds definitions of key terms to clarify the scope of the regulation. In particular, the Board proposes to add a definition of the term *acting in concert* and includes specific presumptions of concerted action to provide guidance to acquirors. In addition, the proposal incorporates current Board practice that the acquisition of a loan in default that is secured by voting securities of a state member bank or bank holding company is presumed to be an acquisition of the underlying securities.

The proposal also would reduce regulatory burden on persons whose ownership percentage increases as the result of a redemption of voting securities by the issuing bank or the action of a third party not within the acquiring person's control. In these situations, the proposal would permit the person affected by the bank or third party action to file a notice within 90 calendar days *after* the transaction occurs, provided that the acquiring person does not reasonably have advance knowledge of the triggering transaction. Currently, these persons must file notice under the CIBC Act *prior* to the action that increases the person's percentage ownership, and, because these persons cannot control the third party action that causes the increased percentage ownership, are often put in violation of the CIBC Act and the Board's Regulation Y.

The Board also proposes to provide more flexible timing for newspaper announcements of filings under the CIBC Act by permitting notificants to publish the announcement up to 30 calendar days before submitting the filing. In addition, the newspaper notice requirement would be modified to eliminate the requirement that the notice include a statement of the percentage of shares proposed to be acquired. Finally, the proposal would add a new section reflecting the stock

loan reporting requirements in section 205 of the Federal Deposit Insurance Corporation Improvement Act.

The Board invites comment on all of its proposed revisions to the CIBC Act implementing regulation. In particular, the Board requests comment on whether the revisions identifying when persons will be presumed to be acting in concert identify all relevant situations in which a bank may undergo a change in control. The Board also requests comment on other ways that its implementing rules under the CIBC Act may be modified to eliminate unnecessary burden and paperwork, consistent with the requirements of the CIBC Act.

3. Notice of Change of Directors and Senior Executive Officers

In addition to the BHC Act and CIBC Act, Regulation Y implements section 914 of the Financial Institutions Reform, Recovery, and Enforcement Act of 1989 (section 914). Section 914 requires a state member bank and a bank holding company (together, ''regulated institutions'') to give prior notice to the System before changing directors or senior executive officers if the regulated institution is in financially troubled condition, has undergone a change in control within two years, or has been chartered for less than two years.

The proposed rule retains a number of the current regulation's substantive provisions. For example, the financial condition of regulated institutions remains the focus for defining when an institution's troubled condition would trigger the prior notice requirements of section 914. The proposed rule also continues to interpret a change in control for purposes of section 914 to mean a transaction that requires a filing under the CIBC Act. Accordingly, section 914 filings are not triggered by the acquisition of a state member bank by a bank holding company under section 3 of the BHC Act.

The current rule would be modified in several ways. The proposed rule would eliminate any filing requirement under section 914 for charter conversions and ''phantom'' bank mergers (chartering an insured depository institution to facilitate the acquisition of an existing insured depository institution) if the converting or acquired depository institution has been in operation for at least two years.

The proposed rule also would adopt the System's current practice of granting individuals who seek election to the board of directors of regulated institutions without the support of management an automatic waiver that allows these individuals to commence service immediately after election to the board and to make a post-election filing under section 914. In addition, the proposed rule would provide more guidance on appealing a disapproved notice. Other changes have been proposed in cooperation with the staffs of the other banking agencies in an attempt to develop uniform definitions, notice procedures and appeals procedures.

The Board invites public comment on these changes, as well as on other ways that the procedures for reviewing changes in officers and directors may be revised to reduce unnecessary burden consistent with the requirements of section 914.

4. Other Changes

The Board has also proposed several other modifications to the regulation to incorporate previous Board decisions and policies regarding the definitions of ''class of voting securities'' and ''immediate family'' and has modified references and several time periods for Reserve Bank action to accommodate the changes explained above. Public comment is welcome on these proposed revisions.

In addition, the Board invites public comment on other suggestions for revising Regulation Y to eliminate unnecessary burden and paperwork consistent with the Board's statutory mandates and safety and soundness.

Attached is a draft of Regulation Y that incorporates the proposed revisions. These revisions affect subparts A, B, C and E, appendix C and the Board's interpretation at 12 CFR 225.125. Changes to the Board's Rules of Procedure will be made as necessary to conform to changes to Regulation Y that are finally adopted. No changes are being proposed at this time to subparts D, F or G, which address, respectively, Control and Divestiture Proceedings, Limitations on Nonbank Banks and Appraisal Standards for Federally Related Transactions.

Regulatory Flexibility Act

Pursuant to the Regulatory Flexibility Act, the Board is required to conduct an analysis of the effect, on small institutions, of the proposed revision to Regulation Y. As of December 31, 1995, the number of bank holding companies totalled 5,274.[14] The following chart provides a distribution, based on asset size, for those companies.

Asset size category (M=million)	Number of bank holding companies	Percent of bank holding company assets
Less than $150M	3,954	[15] 5.5
$150M–$300M	655	3.2
Greater than $300M	665	91.3

[15] Bank holding companies with consolidated assets of less than $150 million are not required to file financial regulatory reports on a consolidated basis. Assets for this group are estimated based on reports filed by the parent companies and subsidiaries.

The proposed comprehensive revision to Regulation Y is intended to eliminate unnecessary burden for all bank holding companies, including smaller banking organizations. Included in the proposed revision are an expedited 15-day notice procedure with minimal information requirements for well-rated and well-run bank holding companies, a reorganization and streamlining of the regulatory laundry list of permissible nonbanking activities, the removal of unnecessary and outmoded regulatory restrictions, and an automatic waiver of filing requirements for bank acquisitions that are in-substance bank-to-bank mergers. These changes apply to all bank holding companies and will be particularly helpful to small bank holding companies.

The proposed revisions include a number of other changes applicable to smaller organizations in particular. These changes include a special exception for small bank holding companies with assets of less than $300 million from the aggregate size limit applying to the use of the expedited application procedures, an update of the small bank holding company policy statement that applies to bank holding companies with assets of less than $150 million and reduction of burden for qualifying small bank holding companies, reduction of the thresholds for qualification for streamlined formation of new bank holding companies, reduction in the filing requirements under the Change in Bank Control Act, and addition of a new exception for small bank holding companies from the prior approval requirements regarding stock redemption proposals. These and the other changes described above are explained in more detail in the Supplementary Information portion of this document.

The Board expects that the numerous changes proposed will result in a significant reduction in regulatory filings, in the paperwork burden and processing time associated with regulatory filings, and in the costs

[14] Financial top-tier domestic bank holding companies. Excludes middle-tier bank holding companies, and foreign bank holding companies that are not required to file a Y–9 report with the Federal Reserve System.

associated with complying with regulation, thereby improving the ability of all bank holding companies, including small organizations, to conduct business on a more cost-efficient basis. The Board invites public comment on this subject.

Paperwork Reduction Act

In accordance with the Paperwork Reduction Act of 1995 (44 U.S.C. Ch. 3506; 5 CFR part 1320 Appendix A.1), the Board reviewed the proposed rule under the authority delegated to the Board by the Office of Management and Budget. Comments on the collections of information should be sent to the Office of Management and Budget, Paperwork Reduction Project (7100–00171, 7100–0121, 7100–0134, 7100–0131, 7100–0119, as applicable; see below), Washington, DC 20503, with copies of such comments to be sent to Mary M. McLaughlin, Federal Reserve Board Clearance Officer, Division of Research and Statistics, Mail Stop 97, Board of Governors of the Federal Reserve System, Washington, DC 20551.

The collection of information requirements in this proposed regulation are found in 12 CFR 225.11, 12 CFR 225.12, 12 CFR 225.14, 12 CFR 225.17, 12 CFR 225.23, 12 CFR 225.24, 12 USC 1817(j) and 1831(i), 12 CFR 225.73, 12 CFR 225.4, and 12 CFR 225.3(a). This information is required to evidence compliance with the requirements of the Bank Holding Company Act, the Change in Bank Control Act and provisions of the Federal Deposit Insurance Act. The respondents are for-profit financial institutions and other corporations, including small businesses, and individuals.

The Federal Reserve may not conduct or sponsor, and an organization is not required to respond to, these information collections unless it displays a currently valid OMB control number. The OMB control numbers are indicated below.

The proposed streamlining of applications to acquire banks and nonbanking companies by institutions that meet the qualifying criteria should result in a significant reduction in burden for respondents that file the Application for Prior Approval To Become a Bank Holding Company, or for a Bank Holding Company To Acquire an Additional Bank or Bank Holding Company (FR Y–3; OMB No. 7100–0171). Approximately 196 respondents file the FR Y–3 annually pursuant to section 3(a)(1) of the Bank Holding Company Act (Act) and 303 respondents file annually the FR Y–3 pursuant to section 3(a)(3) and 3(a)(5) of the Act. The current burden per response is 48.5 hours and 59.0 hours, respectively, for a total estimated annual burden of 27,383 hours. Under the proposed rule, it is estimated that 50 percent of these respondents, or a total of 249 respondents for both types of applications, would meet the criteria to qualify for the filing of a streamlined application. The average number of hours per response for proposed applications of each type is estimated to decrease to 2.5 hours. Therefore the total amount of annual burden is estimated to be 14,343.5 hours. Based on an hourly cost of $50, the annual cost to the public under the proposed revision is estimated to be $717,175, which represents an estimated cost reduction of $651,975 from the estimated annual cost to the public of $1,369,150 under the current rule.

The proposed streamlining of applications to engage de novo in permissible nonbanking activities and to acquire nonbanking companies and the proposal to permit bank holding companies to obtain approval at one time to engage in a preauthorized list of such activities should result in a significant reduction in burden for respondents that file the Application for Prior Approval To Engage Directly or Indirectly in Certain Nonbanking Activities (FR Y–4; OMB No. 7100–0121). Approximately 362 respondents file the FR Y–4 annually to meet application requirements, and 114 respondents file to meet notification requirements. The current burden per response is 59.0 hours and 1.5 hours, respectively, for a total estimated annual burden of 21,529 hours. Under the proposed rule it is estimated that 50 percent of these respondents would meet the criteria to qualify for the filing of a streamlined application, representing an estimated 181 applications and 57 notifications. The average number of hours per response for proposed applications of this type is estimated to decrease to 1.5 hours. The estimated burden per response to meet the notification requirement remains unchanged at 1.5 hours. Therefore the total amount of annual burden is estimated to be 11,121.5 hours. Based on an hourly cost of $50, the annual cost to the public under the proposed revision is estimated to be $556,075, which represents an estimated cost reduction of $520,375 from the current estimated annual cost to the public of $1,076,450 under the current rule.

The proposed elimination of the requirement that a person who has already received Board approval under the Change in Bank Control Act obtain additional approvals to acquire additional shares of the same bank or bank holding company should result in a significant reduction in burden for respondents that file the Notice of Change in Bank Control (FR 2081; OMB No. 7100–0134). Approximately 300 respondents file the FR 2081 annually to meet the notification requirements of change in control, 280 respondents file to meet the requirements for notice of a change in director or senior executive officer, and 1000 respondents file to meet requirements to report certain biographical and financial information. The current burden per response for each requirement is 30.0 hours, 2.0 hours, and 4.0 hours, respectively, for a total estimated annual burden of 13,560 hours. Under the proposed rule it is estimated that 50 percent fewer notifications of change in control will be filed for an annual total of 150 responses. The estimated number of filings to meet the other two requirements and the estimated average hours per response for each requirement remains unchanged. Therefore the total amount of annual burden is estimated to be 9,060 hours. Based on an hourly cost of $20, the total annual cost to the public under the proposed revision is estimated to be $181,200, which represents an estimated cost reduction of $90,000 from the current estimated annual cost to the public of $271,200 under the current rule.

The proposed allowance for bank holding companies to take account of intervening new issues of stock in computing when a stock redemption notice must be filed and the exemption provided to small bank holding companies that meet certain leverage and capital requirements should result in a significant reduction in burden for respondents that file the Notice of Proposed Stock Redemption (FR 4008; OMB No. 7100–0131). Approximately 50 respondents file the FR 4008 annually. The current burden per response is 15.5 hours, for a total estimated annual burden of 775 hours. Under the proposed rule it is estimated that 50 percent fewer notifications will be filed for an annual total of 25 responses and the estimated average hours per response remains unchanged. Therefore the total amount of annual burden is estimated to be 387.5 hours. Based on an hourly cost of $30, the total annual cost to the public under the proposed revision is estimated to be $11,625, which represents a cost reduction of $11,625 from the current estimated cost to the public of $23,250 under the current rule.

The proposed streamlining of application requirements are not expected to change the ongoing annual

burden associated with the Application for a Foreign Organization to Become a Bank Holding Company (FR Y–1f; OMB No. 7100–0119). Approximately 2 respondents file the FR Y–1f annually. The current burden per response is 77 hours for a total estimated annual burden of 144 hours. Based on an hourly cost of $20, the annual cost to the public is estimated to be $3,080.

All information contained in these collections of information are available to the public unless the respondent can substantiate that disclosure of certain information would result in substantial competitive harm or an unwarranted invasion of personal privacy or would otherwise qualify for an exemption under the Freedom of Information Act.

Comments are invited on: (a) Whether the proposed collections of information are necessary for the proper performance of the Federal Reserve's functions; including whether the information has practical utility; (b) the accuracy of the Federal Reserve's estimate of the burden of the proposed information collections, including the cost of compliance; (c) ways to enhance the quality, utility, and clarity of the information to be collected; and (d) ways to minimize the burden of information collection on respondents, including through the use of automated collection techniques or other forms of information technology.

List of Subjects in 12 CFR Part 225

Administrative practice and procedure, Banks, banking, Federal Reserve System, Holding companies, Reporting and recordkeeping requirements, Securities.

For the reasons set out in the preamble, the Board proposes to amend 12 CFR part 225 as follows:

PART 225—BANK HOLDING COMPANIES AND CHANGE IN BANK CONTROL (REGULATION Y)

1. The authority citation for Part 225 continues to read as follows:

Authority: 12 U.S.C. 1817(j)(13), 1818, 1831i, 1831p–1, 1843(c)(8), 1844(b), 1972(l), 3106, 3108, 3310, 3331–3351, 3907, and 3909.

2. Subpart A is revised to read as follows:

Subpart A—General Provisions

Sec.
225.1 Authority, purpose, and scope.
225.2 Definitions.
225.3 Administration.
225.4 Corporate practices.
225.5 Registration, reports, and inspections.
225.6 Penalties for violations.
225.7 Exceptions to tying restrictions.

Subpart A—General Provisions

§ 225.1 Authority, purpose, and scope.

(a) *Authority.* This part[1] (Regulation Y) is issued by the Board of Governors of the Federal Reserve System (*Board*) under section 5(b) of the Bank Holding Company Act of 1956, as amended (12 U.S.C. 1844(b)) (*BHC Act*); sections 8 and 13(a) of the International Banking Act of 1978 (12 U.S.C. 3106 and 3108); section 7(j)(13) of the Federal Deposit Insurance Act, as amended by the Change in Bank Control Act of 1978 (12 U.S.C. 1817(j)(13)) (*Bank Control Act*); section 8(b) of the Federal Deposit Insurance Act (12 U.S.C. 1818(b)); section 914 of the Financial Institutions Reform, Recovery and Enforcement Act of 1989 (12 U.S.C. 1831i); and the International Lending Supervision Act of 1983 (Pub. L. 98–181, title IX). The BHC Act is codified at 12 U.S.C. 1841, *et seq.*

(b) *Purpose.* The principal purposes of this part are to regulate the acquisition of control of banks by companies and individuals, to define and regulate the nonbanking activities in which bank holding companies and foreign banking organizations with United States operations may engage, and to set forth the procedures for securing approval for such transactions and activities.

(c) *Scope.* (1) Subpart A contains general provisions and definitions of terms used in this regulation.

(2) Subpart B governs acquisitions of bank or bank holding company securities and assets by bank holding companies or by any company that will become a bank holding company as a result of the acquisition.

(3) Subpart C defines and regulates the nonbanking activities in which bank holding companies and foreign banking organizations may engage directly or through a subsidiary. In addition, certain nonbanking activities conducted by foreign banking organizations and certain foreign activities conducted by bank holding companies are governed by the Board's Regulation K (12 CFR part 211, International Banking Operations).

(4) Subpart D specifies situations in which a company is presumed to control voting securities or to have the power to exercise a controlling influence over the management or policies of a bank or other company, sets forth the procedures for making a control determination, and provides rules governing the effectiveness of divestitures by bank holding companies.

(5) Subpart E governs changes in bank control resulting from the acquisition by individuals or companies (other than bank holding companies) of voting securities of a bank holding company or state member bank of the Federal Reserve System.

(6) Subpart F specifies the limitations that govern companies that control so-called nonbank banks and the activities of nonbank banks.

(7) Subpart G prescribes minimum standards that apply to the performance of real estate appraisals and identifies transactions that require state certified appraisers.

(8) Subpart H identifies the circumstances when written notice must be provided to the Board prior to the appointment of a director or senior officer of a bank holding company and establishes procedures for obtaining the required Board approval.

(9) Appendix A to the regulation contains the Board's Risk-Based Capital Adequacy Guidelines for bank holding companies and for state member banks.

(10) Appendix B to the regulation contains the Board's Capital Adequacy Guidelines for measuring leverage for bank holding companies and state member banks.

(11) Appendix C to the regulation contains the Board's policy statement governing small bank holding companies.

(12) Appendix D to the regulation contains the Board's capital adequacy guidelines for measuring tier 1 leverage for bank holding companies.

§ 225.2 Definitions.

Except as modified in this regulation or unless the context otherwise requires, the terms used in this regulation have the same meanings as set forth in the relevant statutes.

(a) *Affiliate. Affiliate* means any company that controls, is controlled by, or is under common control with, a bank or nonbank bank.

(b) *Bank.* (1) *Bank* means:

(i) An insured bank as defined in section 3(h) of the Federal Deposit Insurance Act (12 U.S.C. 1813(h)); or

(ii) An institution organized under the laws of the United States which both:

(A) Accepts demand deposits or deposits that the depositor may withdraw by check or similar means for payment to third parties or others; and

(B) Is engaged in the business of making commercial loans.

(2) The term *bank* does not include those institutions qualifying under the exceptions listed in section 2(c)(2) of the BHC Act (12 U.S.C. 1841(c)(2)).

(c) *Bank holding company*—(1) *Bank holding company* means any company

[1] Code of Federal Regulations, title 12, chapter II, part 225.

(including a bank) that has direct or indirect control of a bank, other than control that results from the ownership or control of:

(i) Voting securities held in good faith in a fiduciary capacity (other than as provided in paragraphs (e)(2) (ii) and (iii) of this section) without sole discretionary voting authority, or as otherwise exempted under section 2(a)(5)(A) of the BHC Act;

(ii) Voting securities acquired and held only for a reasonable period of time in connection with the underwriting of securities, as provided in section 2(a)(5)(B) of the BHC Act;

(iii) Voting rights to voting securities acquired for the sole purpose and in the course of participating in a proxy solicitation, as provided in section 2(a)(5)(C) of the BHC Act;

(iv) Voting securities acquired in satisfaction of debts previously contracted in good faith, as provided in section 2(a)(5)(D) of the BHC Act, if the securities are divested within two years of acquisition (or such later period as the Board may permit by order); or

(v) Voting securities of certain institutions owned by a thrift institution or a trust company, as provided in sections 2(a)(5) (E) and (F) of the BHC Act.

(2) Except for the purposes of section 225.4(b) of this subpart and subpart E of this part or as otherwise provided in this regulation, the term *bank holding company* includes a foreign banking organization. For the purposes of subpart B of this part, the term *bank holding company* includes a foreign banking organization only if it owns or controls a bank in the United States.

(d) *Company*—(1) Company includes any bank, corporation, general or limited partnership, association or similar organization, business trust, or any other trust unless by its terms it must terminate either within 25 years, or within 21 years and 10 months after the death of individuals living on the effective date of the trust.

(2) *Company* does not include any organization, the majority of the voting securities of which are owned by the United States or any state.

(3) Testamentary Trusts Exempt. Unless the Board finds that the trust is being operated as a business trust, a trust is presumed not to be a company if the trust:

(i) Terminates within 21 years and 10 months after the death of grantors or beneficiaries of the trust living on the effective date of the trust;

(ii) Is a testamentary trust established by an individual or individuals for the benefit of natural persons (or trusts for the benefit of natural persons) who are related by blood, marriage or adoption;

(iii) Contains only assets previously owned by the individual or individuals who established the trust;

(iv) Is not a Massachusetts business trust; and

(v) Does not issue shares, certificates or any other evidence of ownership.

(e) *Control*—(1) *Control* of a bank or other company means (except for the purposes of subpart E of this part):

(i) Ownership, control, or power to vote 25 percent or more of the outstanding shares of any class of voting securities of the bank or other company, directly or indirectly or acting through one or more other persons;

(ii) Control in any manner over the election of a majority of the directors, trustees, or general partners (or individuals exercising similar functions) of the bank or other company;

(iii) The power to exercise, directly or indirectly, a controlling influence over the management or policies of the bank or other company, as determined by the Board after notice and opportunity for hearing in accordance with § 225.31 of subpart D of this part; or

(iv) Conditioning in any manner the transfer of 25 percent or more of the outstanding shares of any class of voting securities of a bank or other company upon the transfer of 25 percent or more of the outstanding shares of any class of voting securities of another bank or other company.

(2) A bank or other company is deemed to control voting securities or assets owned, controlled, or held, directly or indirectly:

(i) By any subsidiary of the bank or other company;

(ii) In a fiduciary capacity (including by pension and profit-sharing trusts) for the benefit of the shareholders, members, or employees (or individuals serving in similar capacities) of the bank or other company or of any of its subsidiaries; or

(iii) In a fiduciary capacity for the benefit of the bank or other company or any of its subsidiaries.

(f) *Foreign banking organization. Foreign banking organization* and *qualifying foreign banking organization* shall have the same meanings as provided in § 211.23 of the Board's Regulation K (12 CFR 211.23).

(g) *Management official. Management official* means any officer, director (including honorary or advisory directors), partner, or trustee of a bank or other company, or any employee of the bank or other company with policy-making functions.

(h) *Nonbank bank. Nonbank bank* means any institution that:

(1) Became a bank as a result of enactment of the Competitive Equality Amendments of 1987 (Pub. L. 100–86), on the date of such enactment (August 10, 1987); and

(2) Was not controlled by a bank holding company on the day before the enactment of the Competitive Equality Amendments of 1987 (August 9, 1987).

(i) *Outstanding shares. Outstanding shares* means any voting securities, but does not include securities owned by the United States or by a company wholly owned by the United States.

(j) *Person. Person* includes an individual, bank, corporation, partnership, trust, association, joint venture, pool, syndicate, sole proprietorship, unincorporated organization, or any other form of entity.

(k) *Savings association. Savings association* means:

(1) Any federal savings association or federal savings bank;

(2) Any building and loan association, savings and loan association, homestead association, or cooperative bank if such association or cooperative bank is a member of the Savings Association Insurance Fund; and

(3) Any savings bank or cooperative which is deemed by the director of the Office of Thrift Supervision to be a savings association under section 10(l) of the Home Owners Loan Act.

(l) *Shareholder*—(1) *Controlling shareholder* means a person that owns or controls, directly or indirectly, 25 percent or more of any class of voting securities of a bank or other company.

(2) *Principal shareholder* means a person that owns or controls, directly or indirectly, 10 percent or more of any class of voting securities of a bank or other company, or any person that the Board determines has the power, directly or indirectly, to exercise a controlling influence over the management or policies of a bank or other company.

(m) *Subsidiary. Subsidiary* means a bank or other company that is controlled by another company, and refers to a direct or indirect subsidiary of a bank holding company. An indirect subsidiary is a bank or other company that is controlled by a subsidiary of the bank holding company.

(n) *United States. United States* means the United States and includes any state of the United States, the District of Columbia, any territory of the United States, Puerto Rico, Guam, American Samoa, and the Virgin Islands.

(o) *Voting securities*—(1) *In general. Voting securities* means shares of common or preferred stock, general or limited partnership shares or interests,

or similar interests if the shares or interest, by statute, charter, or in any manner, entitle the holder:

(i) To vote for or to select directors, trustees, or partners (or persons exercising similar functions of the issuing company); or

(ii) To vote on or to direct the conduct of the operations or other significant policies of the issuing company.

(2) *Nonvoting shares.* Preferred shares, limited partnership shares or interests, or similar interests are not *voting securities* if:

(i) Any voting rights associated with the shares or interest are limited solely to the type customarily provided by statute with regard to matters that would significantly and adversely affect the rights or preference of the security or other interest, such as the issuance of additional amounts or classes of senior securities, the modification of the terms of the security or interest, the dissolution of the issuing company, or the payment of dividends by the issuing company when preferred dividends are in arrears;

(ii) The shares or interest represent an essentially passive investment or financing device and do not otherwise provide the holder with control over the issuing company; and

(iii) The shares or interest do not entitle the holder, by statute, charter, or in any manner, to select or to vote for the selection of directors, trustees, or partners (or persons exercising similar functions) of the issuing company.

(3) *Class of voting shares.* Shares of stock issued by a single issuer are deemed to be the same class of voting shares, regardless of differences in dividend rights or liquidation preference, if the shares are voted together as a single class on all matters for which the shares have voting rights other than matters described in paragraph (o)(2)(i) of this section that affect solely the rights or preferences of the shares.

§ 225.3 Administration.

(a) *Delegation of authority.* Designated Board members and officers and the Federal Reserve Banks are authorized by the Board to exercise various functions prescribed in this regulation and in the Board's Rules Regarding Delegation of Authority (12 CFR part 265) and the Board's Rules of Procedure (12 CFR part 262).

(b) *Appropriate Federal Reserve Bank.* In administering this regulation, unless a different Federal Reserve Bank is designated by the Board, the appropriate Federal Reserve Bank is as follows:

(1) For a bank holding company (or a company applying to become a bank holding company): The Reserve Bank of the Federal Reserve district in which the company's banking operations are principally conducted, as measured by total domestic deposits in its subsidiary banks on the date it became (or will become) a bank holding company;

(2) For a foreign banking organization that has no subsidiary bank and is not subject to paragraph (b)(1) of this section: The Reserve Bank of the Federal Reserve district in which the total assets of the organization's United States branches, agencies, and commercial lending companies are the largest as of the later of January 1, 1980, or the date it becomes a foreign banking organization;

(3) For an individual or company submitting a notice under subpart E of this part: the Reserve Bank of the Federal Reserve district in which the banking operations of the bank holding company or state member bank to be acquired are principally conducted, as measured by total domestic deposits on the date the notice is filed.

§ 225.4 Corporate practices.

(a) *Bank holding company policy and operations.* (1) A bank holding company shall serve as a source of financial and managerial strength to its subsidiary banks and shall not conduct its operations in an unsafe or unsound manner.

(2) Whenever the Board believes an activity of a bank holding company or control of a nonbank subsidiary (other than a nonbank subsidiary of a bank) constitutes a serious risk to the financial safety, soundness, or stability of a subsidiary bank of the bank holding company and is inconsistent with sound banking principles or the purposes of the BHC Act or the Financial Institutions Supervisory Act of 1966, as amended (12 U.S.C. 1818(b) *et seq.*), the Board may require the bank holding company to terminate the activity or to terminate control of the subsidiary, as provided in section 5(e) of the BHC Act.

(b) *Purchase or redemption by a bank holding company of its own securities.* (1) *Filing notice.* Except as provided in paragraph (b)(6) or paragraph (b)(7) of this section, a bank holding company shall give the Board prior written notice before purchasing or redeeming its equity securities if the gross consideration for the purchase or redemption, when aggregated with the net consideration paid by the company for all such purchases or redemptions during the preceding 12 months, is equal to 10 percent or more of the company's consolidated net worth. For the purposes of this section, ''net consideration'' is the gross consideration paid by the company for all of its equity securities purchased or redeemed during the period minus the gross consideration received for all of its equity securities sold during the period.

(2) *Content of notice.* Any notice under this section shall be filed with the appropriate Reserve Bank and shall contain the following information:

(i) The purpose of the transaction, a description of the securities to be purchased or redeemed, the total number of each class outstanding, the gross consideration to be paid, and the terms of any debt incurred in connection with the transaction;

(ii) A description of all equity securities redeemed within the preceding 12 months, the net consideration paid, and the terms of any debt incurred in connection with those transactions; and

(iii) A current and *pro forma* consolidated balance sheet if the bank holding company has total assets of over $150 million, or a current and *pro forma* parent-company-only balance sheet if the bank holding company has total assets of $150 million or less.

(3) *Acting on notice.* Within 15 calendar days of receipt of a notice under this section, the appropriate Reserve Bank shall either approve the transaction proposed in the notice or refer the notice to the Board for decision. If the notice is referred to the Board for decision, the Board shall act on the notice within 30 calendar days after the Reserve Bank receives the notice.

(4) *Factors considered in acting on notice.* The Board may disapprove a proposed purchase or redemption if it finds that the proposal would constitute an unsafe or unsound practice, or would violate any law, regulation, Board order, directive, or any condition imposed by, or written agreement with, the Board. In determining whether a proposal constitutes an unsafe or unsound practice, the Board will consider whether the bank holding company's financial condition, after giving effect to the proposed purchase or redemption, meets the financial standards applied by the Board under section 3 of the BHC Act, including the Board's Capital Adequacy Guidelines (appendix A) and the Board's Policy Statement for Small Bank Holding Companies (appendix C).

(5) *Disapproval and hearing.* The Board shall notify the bank holding company in writing of the reasons for a decision to disapprove any proposed purchase or redemption. Within 10 calendar days of receipt of a notice of disapproval by the Board, the bank holding company may submit a written request for a hearing. The Board will

order a hearing within 10 calendar days of receipt of that request if it finds that material facts are in dispute or if it otherwise appears appropriate. Any hearing conducted under this paragraph shall be held in accordance with the Board's Rules of Practice for Formal Hearings (12 CFR part 263). At the conclusion of the hearing, the Board shall by order approve or disapprove the proposed purchase or redemption on the basis of the record of the hearing.

(6) *Exception for well-capitalized bank holding companies.* A bank holding company is not required to obtain prior Board approval for the redemption or purchase of its equity securities under this section provided:

(i) The total and tier 1 risk-based capital ratios and the leverage capital ratio for the bank holding company, both before and following the redemption, exceed the thresholds established for well-capitalized state member banks under 12 CFR 208.33(b)(1) as if the bank holding company (on a consolidated basis) were deemed to be a state member bank;

(ii) The bank holding company received a BOPEC composite 1–S or 2–S rating at its most recent inspection; and

(iii) The bank holding company is not the subject of any unresolved supervisory issues.

(7) *Exception for small bank holding companies.* A bank holding company that has less than $150 million in total assets and no public debt outstanding, and does not engage in any leveraged nonbanking activities, is not required to obtain prior Board approval for the redemption or purchase of its equity securities under this section provided:

(i) The bank holding company received a BOPEC composite 1–S or 2–S rating at its most recent inspection;

(ii) The bank holding company has a debt to equity ratio of not more than 1.0:1 on a *pro forma* basis;

(iii) Each bank controlled by the bank holding company is rated composite 1 or 2 as of its most recent examination;

(iv) The total and tier 1 risk-based capital ratios and the leverage capital ratio for each bank controlled by the bank holding company, both before and following the redemption, exceed the thresholds established for ''well-capitalized'' state member banks under 12 CFR 208.33(b)(1); and

(v) The bank holding company is not the subject of any unresolved supervisory issues.

(c) *Deposit insurance.* Every bank that is a bank holding company or a subsidiary of a bank holding company shall obtain Federal Deposit Insurance and shall remain an *insured bank* as defined in section 3(h) of the Federal Deposit Insurance Act (12 U.S.C. 1813(h)).

(d) *Acting as transfer agent, municipal securities dealer, or clearing agent.* A bank holding company or any nonbanking subsidiary that is a ''bank'', as defined in section 3(a)(6) of the Securities Exchange Act of 1934 (15 U.S.C. 78c(a)(6)), and that is a transfer agent of securities, a municipal securities dealer, a clearing agency, or a participant in a clearing agency (as those terms are defined in section 3(a) of the Securities Exchange Act (12 U.S.C. 78c(a)), shall be subject to §§ 208.8 (f)–(j) of the Board's Regulation H (12 CFR 208.8 (f)–(j)) as if it were a state member bank.

(e) *Reporting requirement for credit secured by certain bank holding company stock.* Each executive officer or director of a bank holding company the shares of which are not publicly traded shall report annually to the board of directors of the bank holding company the outstanding amount of any credit that was extended to the executive officer or director and that is secured by shares of the bank holding company. For purposes of this paragraph, the terms ''executive officer'' and ''director'' shall have the meaning given in § 215.2 of Regulation O, 12 CFR 215.2.

(f) *Criminal referral report.* A bank holding company or any nonbank subsidiary thereof, or a foreign bank that is subject to the BHC Act or any nonbank subsidiary of such foreign bank operating in the United States, shall file a criminal referral form in accordance with the provisions of § 208.20 of the Board's Regulation H, 12 CFR 208.20.

§ 225.5 Registration, reports, and inspections.

(a) *Registration of bank holding companies.* Each company shall register within 180 days after becoming a bank holding company by furnishing information in the manner and form prescribed by the Board. A company that receives the Board's prior approval under subpart B of this part to become a bank holding company may complete this registration requirement through submission of its first annual report to the Board as required by paragraph (b) of this section.

(b) *Reports of bank holding companies.* Each bank holding company shall furnish, in the manner and form prescribed by the Board, an annual report of the company's operations for the fiscal year in which it becomes a bank holding company, and for each fiscal year during which it remains a bank holding company. Additional information and reports shall be furnished as the Board may require.

(c) *Examinations and inspections.* The Board may examine or inspect any bank holding company and each of its subsidiaries and prepare a report of their operations and activities. With respect to a foreign banking organization, the Board may also examine any branch or agency of a foreign bank in any state of the United States and may examine or inspect each of the organization's subsidiaries in the United States and prepare reports of their operations and activities. The Board will rely as far as possible on the reports of examination made by the primary federal or state supervisor of the subsidiary bank of a bank holding company or of the branch or agency of the foreign bank.

§ 225.6 Penalties for violations.

(a) *Criminal and civil penalties.* Section 8 of the BHC Act provides criminal penalties for willful violation, and civil penalties for violation, by any company or individual of the BHC Act or any regulation or order issued under it, or for making a false entry in any book, report, or statement of a bank holding company. Civil money penalty assessments for violations of the BHC Act shall be made in accordance with subpart C of the Board's Rules of Practice for Hearings (12 CFR part 263, subpart C). For any willful violation of the Bank Control Act or any regulation or order issued under it, the Board may assess a civil penalty as provided in 12 U.S.C. 1817(j)(15).

(b) *Cease-and-desist proceedings.* For any violation of the BHC Act, the Bank Control Act, this regulation, or any order or notice issued thereunder, the Board may institute a cease-and-desist proceeding in accordance with the Financial Institutions Supervisory Act of 1966, as amended (12 U.S.C. 1818(b) *et seq.*).

§ 225.7 Exceptions to tying restrictions.

(a) *Purpose.* This section establishes exceptions to the anti-tying restrictions of section 106 of the Bank Holding Company Act Amendments of 1970 (12 U.S.C. 1971, 1972(1)). These exceptions are in addition to statutory exceptions in section 106. The section also restricts tying of electronic benefit transfer services by bank holding companies and their nonbank subsidiaries.

(b) Exceptions to statute. Subject to the limitations of paragraph (c) of this section, a bank may:

(1) *Traditional bank products.* Extend credit, lease or sell property of any kind, or furnish any service, or fix or vary the consideration for any of the foregoing,

on the condition or requirement that a customer:

(i) Obtain a traditional bank product from an affiliate of the bank; or

(ii) Provide some additional credit, property, or service to an affiliate of the bank that is related to and usually provided in connection with a traditional bank product.

(2) *Safe harbor for combined-balance discounts.* Vary the consideration for any product or package of products based on a customer's maintaining a combined minimum balance in certain products specified by the bank (eligible products), if:

(i) The bank offers deposits, and all such deposits are eligible products; and

(ii) Balances in deposits count at least as much as nondeposit products toward the minimum balance.

(c) *Limitations on exceptions.* Any exception granted pursuant to this section shall terminate upon a finding by the Board that the arrangement is resulting in anticompetitive practices. The eligibility of a bank to operate under any exception granted pursuant to this section shall terminate upon a finding by the Board that its exercise of this authority is resulting in anticompetitive practices.

(d) *Electronic benefit transfer services.* A bank holding company or nonbank subsidiary of a bank holding company that provides electronic benefit transfer services shall be subject to the anti-tying restrictions applicable to such services set forth in section 7(i)(11) of the Food Stamp Act of 1977 (7 U.S.C. 2016(i)(11).

(e) *Definitions.* For purposes of this section:

(1) *Traditional bank product* means a loan, discount, deposit, or trust service.

(2) *Affiliate* has the meaning given such term in section 2(k) of the Bank Holding Company Act (12 U.S.C. 1841(k)).

3. Subpart B is revised to read as follows:

Subpart B—Acquisition of Bank Securities or Assets

Sec.
225.11 Transactions requiring Board approval.
225.12 Transactions not requiring Board approval.
225.13 Factors considered in acting on bank acquisition proposals.
225.14 Expedited action for certain bank acquisitions by well-run bank holding companies.
225.15 Procedures for other bank acquisition proposals.
225.16 Public notice, hearings and other provisions governing applications and notices.
225.17 Notice procedure for one-bank holding company formations.

Subpart B—Acquisition of Bank Securities or Assets

§ 225.11 Transactions requiring Board approval.

The following transactions require the Board's prior approval under section 3 of the Bank Holding Company Act except as exempted under § 225.12 or as otherwise covered by § 225.17 of this part:

(a) *Formation of bank holding company.* Any action that causes a bank or other company to become a bank holding company.

(b) *Acquisition of subsidiary bank.* Any action that causes a bank to become a subsidiary of a bank holding company.

(c) *Acquisition of control of bank or bank holding company securities.* The acquisition by a bank holding company of direct or indirect ownership or control of any voting securities of a bank or bank holding company, if the acquisition results in the company's control of more than 5 percent of the outstanding shares of any class of voting securities of the bank or bank holding company. An acquisition includes the purchase of additional securities through the exercise of preemptive rights, but does not include securities received in a stock dividend or stock split that does not alter the bank holding company's proportional share of any class of voting securities.

(d) *Acquisition of bank assets.* The acquisition by a bank holding company or by a subsidiary thereof (other than a bank) of all or substantially all of the assets of a bank.

(e) *Merger of bank holding companies.* The merger or consolidation of bank holding companies, including a merger through the purchase of assets and assumption of liabilities.

(f) *Transactions by foreign banking organization.* Any transaction described in paragraphs (a) through (e) of this section by a foreign banking organization (as defined in 12 CFR 211.21(n)) that involves the acquisition of an interest in a U.S. bank or in a bank holding company for which application would be required if the foreign banking organization were a bank holding company.

§ 225.12 Transactions not requiring Board approval.

The following transactions do not require the Board's approval under § 225.11 of this subpart:

(a) *Acquisition of securities in fiduciary capacity.* The acquisition by a bank or other company (other than a trust that is a company) of control of voting securities of a bank or bank holding company in good faith in a fiduciary capacity, unless:

(1) The acquiring bank or other company has sole discretionary authority to vote the securities and retains the authority for more than two years; or

(2) The acquisition is for the benefit of the acquiring bank or other company, or its shareholders, employees, or subsidiaries.

(b) *Acquisition of securities in satisfaction of debts previously contracted.* The acquisition by a bank or other company of control of voting securities of a bank or bank holding company in the regular course of securing or collecting a debt previously contracted in good faith, if the acquiring bank or other company divests the securities within two years of acquisition. The Board or Reserve Bank may grant requests for up to three one-year extensions.

(c) *Acquisition of securities by a bank holding company with majority control.* The acquisition by a bank holding company of additional voting securities of a bank or bank holding company if more than 50 percent of the outstanding voting securities of the bank or bank holding company is lawfully controlled by the acquiring bank holding company prior to the acquisition.

(d) *Acquisitions involving bank mergers*—(1) *Transactions subject to Bank Merger Act.* The merger or consolidation of a subsidiary bank of a bank holding company with another bank, or the purchase of assets by such a subsidiary bank, or a similar transaction involving subsidiary banks of a bank holding company, if the transaction requires the prior approval of a federal supervisory agency under the Bank Merger Act (12 U.S.C. 1828(c)) and does not involve the acquisition of shares of a bank. This exception does not include:

(i) The merger of a nonsubsidiary bank and a nonoperating subsidiary bank formed by a company for the purpose of acquiring the nonsubsidiary bank; or

(ii) Any transaction requiring the Board's prior approval under § 225.11(e) of this subpart. The Board may require an application under this subpart if it determines that the merger or consolidation would have a significant adverse impact on the financial condition of the bank holding company or otherwise requires approval under section 3 of the BHC Act.

(2) *Certain acquisitions subject to the Bank Merger Act.* The acquisition by a bank holding company of shares of a bank or company controlling a bank, or the merger of a company controlling a bank with the bank holding company, as part of the merger or consolidation of

the bank with a subsidiary bank (other than a nonoperating subsidiary bank) of the acquiring bank holding company or as part of the purchase of substantially all of the assets of the bank by a subsidiary bank (other than a nonoperating subsidiary bank) of the acquiring bank holding company, if:

(i) The bank merger, consolidation, or asset purchase occurs simultaneously with the acquisition of the shares of the bank or bank holding company or the merger of holding companies, and the bank is not operated by the acquiring bank holding company as a separate entity other than as the survivor of the merger, consolidation or asset purchase;

(ii) The transaction requires the prior approval of a federal supervisory agency under the Bank Merger Act (12 U.S.C. 1828(c));

(iii) The transaction does not involve the acquisition of any nonbank company that would require prior approval under section 4 of the BHC Act (12 U.S.C. 1843);

(iv) Both before and after the transaction, the acquiring bank holding company meets the Board's Capital Adequacy Guidelines (appendixes A, B and C of this part);

(v) At least 10 days prior to the transaction, the acquiring bank holding company has provided to the Reserve Bank written notice of the transaction that contains:

(A) A copy of the filing made to the appropriate federal banking agency under the Bank Merger Act, and

(B) A description of the holding company's involvement in the transaction, the purchase price and the source of funding for the purchase price; and

(vi) Prior to expiration of the period provided in paragraph (d)(2)(v) of this section, the Reserve Bank has not informed the bank holding company that an application under § 225.11 is required.

(3) *Internal corporate reorganizations.* (i) Subject to paragraph (d)(3)(ii) of this section, any of the following transactions performed by a bank holding company:

(A) The merger of subsidiary holding companies;

(B) The formation of a subsidiary holding company;

(C) The transfer of control or ownership of a subsidiary bank from one subsidiary holding company to another subsidiary holding company or to the parent holding company.

(ii) A transaction described in paragraph (d)(3)(i) of this section qualifies for this exception if:

(A) The transaction represents solely a corporate reorganization involving companies and insured depository institutions that, both preceding and following the transaction, are controlled and operated by the bank holding company;

(B) The transaction does not involve the acquisition of additional voting shares of an insured depository institution that, prior to the transaction, was less than majority owned by the bank holding company;

(C) Both before and after the transaction, the bank holding company meets the Board's capital adequacy guidelines (appendixes A, B and C of this part); and

(D) At least 10 days prior to the transaction, the bank holding company has provided to the Reserve Bank written notice of the transaction and the Reserve Bank has not informed the bank holding company that an application under § 225.11 is required.[1]

(e) *Holding securities in escrow.* The holding of any voting securities of a bank or bank holding company in an escrow arrangement for the benefit of an applicant pending the Board's action on an application for approval of the proposed acquisition, if title to the securities and the voting rights remain with the seller and payment for the securities has not been made to the seller.

(f) *Acquisition of foreign banking organization.* The acquisition of a foreign banking organization (as defined in 12 CFR 211.21(n)) where the foreign banking organization does not directly or indirectly own or control a bank in the United States, unless the acquisition is also by a foreign banking organization and otherwise subject to § 225.11(f) of this subpart.

§ 225.13 Factors considered in acting on bank acquisition proposals.

(a) *Factors requiring denial.* As specified in section 3(c) of the BHC Act, the Board may not approve any application under this subpart if:

(1) The transaction would result in a monopoly or would further any combination or conspiracy to monopolize, or to attempt to monopolize, the business of banking in any part of the United States;

(2) The effect of the transaction may be substantially to lessen competition in any section of the country, tend to create a monopoly, or in any other manner be in restraint of trade, unless the Board finds that the transaction's anticompetitive effects are clearly outweighed by its probable effect in meeting the convenience and needs of the community;

(3) The applicant has failed to provide the Board with adequate assurances that it will make available such information on its operations or activities, and the operations or activities of any affiliate of the applicant, that the Board deems appropriate to determine and enforce compliance with the BHC Act and other applicable federal banking statutes, and any regulations thereunder; or

(4) In the case of an application involving a foreign bank, the foreign bank is not subject to comprehensive supervision or regulation on a consolidated basis by the appropriate authorities in its home country, as provided in § 211.24(c)(1)(ii) of the Board's Regulation K (12 CFR 211.24(c)(1)(ii)).

(b) *Other factors.* In deciding applications under this subpart, the Board also considers the following factors with respect to the applicant, its subsidiaries, any banks related to the applicant through common ownership or management, and the bank or banks to be acquired:

(1) *Financial condition.* Their financial condition and future prospects, including whether current and projected capital positions and levels of indebtedness conform to standards and policies established by the Board.

(2) *Managerial resources.* The competence, experience, and integrity of the officers, directors, and principal shareholders of the applicant, its subsidiaries and the banks and bank holding companies concerned; their record of compliance with laws and regulations; and the record of the applicant and its affiliates of fulfilling any commitments to, and any conditions imposed by, the Board in connection with prior applications.

(3) *Convenience and needs of the community.* The convenience and needs of the communities to be served, including the record of performance under the Community Reinvestment Act of 1977 (12 U.S.C. 2901 *et seq.*) and regulations issued thereunder, including the Board's Regulation BB (12 CFR part 228).

(c) *Interstate transactions.* The Board may approve any application or notice under this subpart by a bank holding company to acquire control of or all or substantially all of the assets of a bank located in a state other than the home state of the bank holding company, without regard to whether the transaction is prohibited under the law of any state, if the transaction complies

[1] In the case of transactions that result in the formation or designation of a new bank holding company, the new bank holding company must also complete the registration requirements described in § 225.5.

with the requirements of section 3(d) of the BHC Act (12 U.S.C. 1842(d)).

§ 225.14 Expedited action for certain bank acquisitions by well-run bank holding companies.

(a) *Filing of notice*—(1) *Information required and public notice.* As an alternative to the procedure provided in § 225.15, a bank holding company that meets the requirements of paragraph (b) of this section may satisfy the prior approval requirements of § 225.11 in connection with the acquisition of shares or control of a bank, or a merger or consolidation between registered bank holding companies, by providing the appropriate Reserve Bank with a written notice containing the following:

(i) A certification that all of the criteria in paragraph (b) of this section are met;

(ii) A description of the transaction that includes identification of the companies and insured depository institutions involved in the transaction, identification of each banking market affected by the transaction, and a description of the funding for the transaction;

(iii) Evidence that notice of the proposal has been published in accordance with § 225.16(b); and

(iv) A balance sheet and capital ratios for the acquiring bank holding company and the market indexes for each relevant banking market reflecting the *pro forma* effect of the transaction.

(2) *Action on proposals under this section.* The Board or the appropriate Reserve Bank shall act on a proposal submitted under this section or notify the bank holding company that the transaction is subject to the procedure in § 225.15 before the later of:

(i) 15 calendar days following the filing of all of the information required in paragraph (a)(1)of this section; or

(ii) 3 business days following the close of the public comment period;

(3) *Acceptance of notice in event expedited procedure not available.* In the event that the Board or the Reserve Bank determines after the filing of a notice under this section that a bank holding company may not use the procedure in this section and must file a notice under § 225.15, the notice shall be deemed accepted for purposes of § 225.15 as of the date that the notice was filed under this section.

(b) *Criteria for use of expedited procedure.* The procedure in this section is available only if:

(1) *Well capitalized organization.*

(i) *Bank holding company.* Both at the time of and immediately after the proposed transaction, the acquiring bank holding company is well capitalized;[2]

(ii) *Insured depository institutions.* Both at the time of and immediately after the proposed transaction,

(A) The lead insured depository institution of the acquiring bank holding company is well capitalized;

(B) Well capitalized insured depository institutions control at least 80 percent of the total assets of insured depository institutions controlled by the acquiring bank holding company; and

(C) No insured depository institution controlled by the acquiring bank holding company is undercapitalized;

(2) *Well managed organization.* At the time of the transaction, the acquiring bank holding company, its lead insured depository institution, and insured depository institutions that control at least 80 percent of the total assets of insured depository institutions controlled by such holding company are well managed;

(3) *Established CRA performance record.* At the time of the transaction, the lead insured depository institution of the acquiring bank holding company, and insured depository institutions that control at least 80 percent of the total assets of insured depository institutions controlled by such holding company have received a 'satisfactory' or better composite rating and at least a satisfactory rating for consumer compliance at the most recent examination under the Community Reinvestment Act;

(4) *Competitive criteria*—(i) *Competitive screen.* Without regard to any divestitures proposed by the acquiring bank holding company, the acquisition does not cause:

(A) Insured depository institutions controlled by the acquiring bank holding company to control in excess of 35 percent of market deposits in any relevant banking market, or

(B) The Herfindahl-Hirschman index to increase by more than 200 points in any relevant banking market with a post-acquisition index of at least 1800;

(ii) *Department of Justice.* The Department of Justice has not indicated to the Board that consummation of the transaction is likely to have a significantly adverse effect on competition in any relevant banking market;

(5) *Size of acquisition.* Either:

(i) *In general.* The book value of the aggregate risk-weighted assets acquired by the acquiring bank holding company in all transactions approved during the previous 12 months under this section and § 225.23 does not exceed 35 percent of the consolidated risk-weighted assets of the acquiring bank holding company; or

(ii) *Small bank holding companies.* Immediately following consummation of the proposed transaction, the consolidated total assets of the acquiring bank holding company are less than $300 million;

(6) *Interstate acquisitions.* Board approval of the transaction is not prohibited under section 3(d) of the BHC Act;

(7) *Other supervisory considerations.* Board approval of the transaction is not prohibited under the informational sufficiency and comprehensive home country supervision standards set forth in section 3(c)(3) of the BHC Act; and

(8) *Notification.* The acquiring bank holding company has not been notified by the Board or Reserve Bank prior to the expiration of the period in paragraph (a)(2) of this section that an application under § 225.15 is required.

(c) *Comment by primary banking supervisor*—(1) *Notice.* Upon receipt of a notice under this section, the appropriate Reserve Bank shall promptly furnish notice of the proposal and a copy of the information filed pursuant to paragraph (a) of this section to the primary banking supervisor of the banks to be acquired.

(2) *Comment period.* The primary banking supervisor shall have 30 calendar days (or such shorter time as agreed to by the primary banking supervisor) from the date of the letter giving notice in which to submit its views and recommendations to the Board.

(3) *Action subject to supervisor's comment.* Action by the Board or the Reserve Bank on a proposal under this section is subject to the condition that the primary banking supervisor not object to the proposal prior to the expiration of the comment period described in paragraph (c)(2) of this section. In the event that the primary banking supervisor provides written notice to the Board during the 30-day period described in paragraph (c)(2) of this section objecting to the proposal, any approval given under this section shall be revoked and the Board shall order a hearing on the proposal in accordance with section 3(b) of the Bank Holding Company Act;

(4) *Emergencies.* Notwithstanding paragraphs (c) (2) and (3) of this section, the Board may provide the primary banking supervisor with 10 calendar days notice of a proposal under this

[2] For purposes of this paragraph, a bank holding company with assets under $150 million will be deemed to have met the requirements of this paragraph if the parent bank holding company's ratio of *pro forma* debt to equity is 1.0:1 or less and the proposal in all other respects meets the requirements of appendix C of this part.

section if the Board finds that an emergency exists requiring expeditious action, and may act during the notice period or without providing notice to the primary banking supervisor if the Board finds that it must act immediately to prevent probable failure.

(d) *Definitions.* For purposes of this section—

(1) *Primary banking supervisor.* The *primary banking supervisor* for an institution is:

(i) The Office of the Comptroller of the Currency in the case of a national banking association or District bank; and

(ii) The appropriate supervisory authority for the State in which the bank is chartered in the case of a State bank.

(2) *Well managed.* A company or depository institution is *well managed* if, at its most recent inspection or examination or subsequent review, the company or institution received:

(i) One of the highest two composite ratings; and

(ii) At least a satisfactory rating for management, if such a rating is given.

§ 225.15 Procedures for other bank acquisition proposals.

(a) *Filing application.* Except as provided in § 225.14, an application for the Board's prior approval under this subpart shall be governed by the provisions of this section and shall be filed with the appropriate Reserve Bank on the designated form.

(b) *Notice to primary banking supervisor.* Upon receipt of an application under this subpart, the Reserve Bank shall promptly furnish notice and a copy of the application to the primary banking supervisor of each bank to be acquired. The primary supervisor shall have 30 calendar days from the date of the letter giving notice in which to submit its views and recommendations to the Board.

(c) *Accepting application for processing.* Within 7 calendar days after the Reserve Bank receives an application under this section, the Reserve Bank shall accept it for processing or return the application if it is substantially incomplete. Upon accepting an application, the Reserve Bank shall immediately send copies to the Board. The Reserve Bank or the Board may request additional information necessary to complete the record of an application at any time after accepting the application for processing.

(d) *Action on applications*—(1) *Action under delegated authority.* The Reserve Bank shall approve an application under this section within 30 calendar days after it has accepted the application, unless the Reserve Bank, upon notice to the applicant, refers the application to the Board for decision because action under delegated authority is not appropriate.

(2) *Board action.* The Board shall act on an application under this subpart that is referred to it for decision within 60 calendar days after the Reserve Bank has accepted the application, unless the Board notifies the applicant that the 60-day period is being extended for a specified period and states the reasons for the extension. In no event may the extension exceed the 91-day period provided in § 225.16(e). The Board may at any time request additional information that it believes is necessary for its decision.

§ 225.16 Public notice, hearings and other provisions governing applications and notices.

(a) *In general.* The provisions of this section shall apply to all notices and applications filed under §§ 225.14 and 225.15.

(b) *Public notice*—(1) *Newspaper publication*—(i) *Location of publication.* In the case of each notice or application submitted under §§ 225.14 or 225.15, the applicant shall cause a newspaper notice to be published in a newspaper of general circulation in the form and at the locations specified in § 262.3 of the Rules of Procedure (12 CFR 262.3);

(ii) *Content of notice.* A newspaper notice under this paragraph shall provide an opportunity for interested persons to comment on the proposal for a period of at least 30 calendar days; and

(iii) *Timing of publication.* Each newspaper notice published in connection with a proposal under this paragraph must be published no more than 30 calendar days before and no later than 7 calendar days following the date that a notice or application is filed with the appropriate Reserve Bank.

(2) Federal Register *notice*—(i) *Publication by Board.* Upon receipt of a notice or application under § 225.14 or § 225.15, the Board shall promptly publish notice of the proposal in the Federal Register and shall provide an opportunity for interested persons to comment on the proposal for a period of at least 15 calendar days;

(ii) *Request for advance publication.* At any time during the 30-day period prior to filing a notice or application under § 225.14 or § 225.15, a bank holding company may request that the Board publish notice of a proposal in the Federal Register. A request for advance Federal Register publication must be made in writing to the appropriate Reserve Bank and must contain the identifying information prescribed by the Board for Federal Register publication;

(3) *Waiver or shortening of notice.* The Board may waive or shorten the required notice periods under this section if the Board determines that an emergency exists requiring expeditious action on the proposal or the Board finds that immediate action is necessary to prevent the probable failure of an insured depository institution.

(c) *Notice to Attorney General.* The Board or Reserve Bank shall immediately notify the Attorney General of approval of any notice or application under § 225.14 or § 225.15.

(d) *Hearings.* As provided in section 3(b) of the BHC Act, the Board shall order a hearing on any application or notice under §§ 225.14 or 225.15 if the Board receives from the primary supervisor of the bank to be acquired, within the 30-day period specified in § 225.14(c) or § 225.15(b), a written recommendation of disapproval of an application. The Board may order a formal or informal hearing or other proceeding on the application or notice, as provided in § 262.3(i)(2) of the Board's Rules of Procedure. Any request for a hearing (other than from the primary supervisor) shall comply with section 262.3(e) of the Rules of Procedure (12 CFR 262.3(e)).

(e) *Approval through failure to act*—(1) *Ninety-one day rule.* An application or notice under § 225.14 or § 225.15 shall be deemed approved if the Board fails to act on the application or notice within 91 calendar days after the date of submission to the Board of the complete record on the application. For this purpose, the Board acts when it issues an order stating that the Board has approved or denied the application or notice, reflecting the votes of the members of the Board, and indicating that a statement of the reasons for the decision will follow promptly.

(2) *Complete record.* For the purpose of computing the commencement of the 91-day period, the record is complete on the latest of:

(i) The date of receipt by the Board of an application or notice that has been accepted by the Reserve Bank;

(ii) The last day provided in any notice for receipt of comments and hearing requests on the application or notice;

(iii) The date of receipt by the Board of the last relevant material regarding the application or notice that is needed for the Board's decision, if the material is received from a source outside of the Federal Reserve System; or

(iv) The date of completion of any hearing or other proceeding.

(f) *Exceptions to notice and hearing requirements*—(1) *Probable bank failure*. If the Board finds it must act immediately on an application or notice in order to prevent the probable failure of a bank or bank holding company, the Board may modify or dispense with the notice and hearing requirements provided in this section.

(2) *Emergency*. If the Board finds that, although immediate action on an application or notice is not necessary, an emergency exists requiring expeditious action, the Board shall provide the primary supervisor 10 days to submit its recommendation. The Board may act on such an application or notice without a hearing and may modify or dispense with the other notice and hearing requirements provided in this section.

(g) *Waiting period*. A transaction approved under § 225.14 or § 225.15 shall not be consummated until 30 days after the date of approval of the application, except that a transaction may be consummated:

(1) Immediately upon approval, in the event that the Board has determined under paragraph (f) of this section that the application or notice involves a probable bank failure;

(2) On or after the 5th calendar day following the date of approval, in the event that the Board has determined under paragraph (f) of this section that an emergency exists requiring expeditious action; or

(3) On or after the 15th calendar day following the date of approval, in the event that the Board has not received any adverse comments from the United States attorney general relating to the competitive factors and the attorney general has consented to such shorter waiting period.

§ 225.17 Notice procedure for one-bank holding company formations.

(a) *Transactions which qualify under this section*. An acquisition by a company of control of a bank may be consummated 30 days after providing notice to the appropriate Reserve Bank in accordance with paragraph (b) of this section, provided that all of the following conditions are met:

(1) The shareholder or shareholders who control at least 67 percent of the shares of the bank would control, immediately after the reorganization, at least 67 percent of the shares of the holding company in substantially the same proportion, except for changes in shareholders' interests resulting from the exercise of dissenting shareholders' rights under state or federal law;[3]

(2) No shareholder or group of shareholders acting in concert would, following the reorganization, own or control 10 percent or more of any class of voting shares of the bank holding company unless that shareholder or group of shareholders was authorized, after review under the Change in Bank Control Act of 1978 (12 U.S.C. 1817(j)) by the appropriate federal banking agency for the bank, to own or control 10 percent or more of any class of voting shares of the bank;[4]

(3) The bank is adequately capitalized (as defined in section 38 of the Federal Deposit Insurance Act (12 U.S.C. 1831o));

(4) The bank has received at least a composite ''satisfactory'' rating at its most recent examination, in the event that the bank has been subject to an examination;

(5) At the time of the reorganization, neither the bank nor any of its officers, directors, or principal shareholders is involved in any unresolved supervisory or enforcement matters with any appropriate federal banking agency;

(6) The company demonstrates that any debt that it would incur at the time of the reorganization, and the proposed means of retiring this debt, would not place undue burden on the holding company or its subsidiary on a *pro forma* basis;[5]

(7) The holding company would not, as a result of the reorganization, acquire control of any additional bank or engage in any activities other than those of managing and controlling banks; and

(8) During this period, neither the appropriate Reserve Bank nor the Board has objected to the proposal or required the filing of an application under § 225.15 of this subpart.

(b) *Contents of notice*. A notice filed under this paragraph must include:

(1) Certification by the notificant's board of directors that the requirements of 12 U.S.C. 1842(a)(C) and this section are met by the proposal;

(2) A list identifying all principal shareholders of the bank prior to the reorganization and of the holding company following the reorganization, and specifying the percentage of shares held by each principal shareholder in the bank and proposed to be held in the new holding company;

(3) A description of the resulting management of the proposed bank holding company and its subsidiary bank, including:

(i) Biographical information regarding any senior officers and directors of the resulting bank holding company who were not senior officers or directors of the bank prior to the reorganization; and

(ii) A detailed history of the involvement of any officer, director, or principal shareholder of the resulting bank holding company in any administrative or criminal proceeding; and

(4) *Pro forma* financial statements for the holding company, and a description of the amount, source and terms of debt, if any, that the bank holding company proposes to incur, and information regarding the sources and timing for debt service and retirement.

(c) *Acknowledgment of notice*. Within 7 calendar days following receipt of a notice under this section, the Reserve Bank shall provide the notificant with a written acknowledgment of receipt of the notice. This written acknowledgment shall indicate that the transaction described in the notice may be consummated on the 30th calendar day after the date of receipt of the notice if the Reserve Bank or the Board has not objected to the proposal during that time.

(d) *Application required upon objection*. The Reserve Bank or the Board may object to a proposal during the notice period by providing the bank holding company with a written explanation of the reasons for the objection. In such case, the bank holding company may file an application for prior approval of the proposal pursuant to § 225.15 of this subpart.

4. Subpart C is revised to read as follows:

Subpart C—Nonbanking Activities and Acquisitions by Bank Holding Companies

Sec.
225.21 Prohibited nonbanking activities and acquisitions; exempt bank holding companies.
225.22 Exempt nonbanking activities and acquisitions.
225.23 Expedited action for nonbanking proposals by well-run bank holding companies.

[3] A shareholder of a bank in reorganization will be considered to have the same proportional interest in the holding company if the shareholder interest increases, on a *pro rata* basis, as a result of either the redemption of shares from dissenting shareholders by the bank or bank holding company or the acquisition of shares of dissenting shareholders by the remaining shareholders.

[4] This procedure is not available in cases in which the exercise of dissenting shareholders' rights would cause a company that is not a bank holding company (other than the company in formation) to be required to register as a bank holding company. This procedure also is not available for the formation of a bank holding company organized in mutual form.

[5] For a banking organization with consolidated assets, on a *pro forma* basis, of less than $150 million (other than a banking organization that would control a *de novo* bank), this requirement would be satisfied if the proposal would comply with the Board's policy statement on small bank holding company formations (appendix C of this part).

225.24 Procedures for other nonbanking proposals.
225.25 Duration of approval, hearings, alteration of activities and other matters.
225.26 Factors considered in acting on nonbanking proposals.
225.27 Procedures for determining scope of nonbanking activities.
225.28 List of permissible nonbanking activities.

Subpart C—Nonbanking Activities and Acquisitions by Bank Holding Companies

§ 225.21 Prohibited nonbanking activities and acquisitions; exempt bank holding companies.

(a) *Prohibited nonbanking activities and acquisitions.* Except as provided in § 225.22 of this subpart, a bank holding company or a subsidiary may not engage in, or acquire or control, directly or indirectly, voting securities or assets of a company engaged in, any activity other than:

(1) Banking or managing or controlling banks and other subsidiaries authorized under the BHC Act; and

(2) An activity that the Board determines to be so closely related to banking or managing or controlling banks as to be a proper incident thereto, including any incidental activities that are necessary to carry on such an activity, if the bank holding company has obtained the prior approval of the Board for that activity in accordance with and subject to the requirements of this regulation.

(b) *Exempt bank holding companies.* The following bank holding companies are exempt from the provisions of this subpart:

(1) *Family-owned companies.* Any company that is a ''company covered in 1970,'' as defined in section 2(b) of the BHC Act, more than 85 percent of the voting securities of which was collectively owned on June 30, 1968, and continuously thereafter, by members of the same family (or their spouses) who are lineal descendants of common ancestors.

(2) *Labor, agricultural, and horticultural organizations.* Any company that was on January 4, 1977, both a bank holding company and a labor, agricultural, or horticultural organization exempt from taxation under section 501 of the Internal Revenue Code (26 U.S.C. 501(c)).

(3) *Companies granted hardship exemption.* Any bank holding company that has controlled only one bank since before July 1, 1968, and that has been granted an exemption by the Board under section 4(d) of the BHC Act, subject to any conditions imposed by the Board.

(4) *Companies granted exemption on other grounds.* Any company that acquired control of a bank before December 10, 1982, without the Board's prior approval under section 3 of the BHC Act, on the basis of a narrow interpretation of the term *demand* deposit or *commercial loan* if the Board has determined that:

(i) Coverage of the company as a bank holding company under this subpart would be unfair or represent an unreasonable hardship; and

(ii) Exclusion of the company from coverage under this regulation is consistent with the purposes of the BHC Act and section 106 of the Bank Holding Company Act Amendments of 1970 (12 U.S.C. 1971, 1972(1)). The provisions of § 225.4 of subpart A of this regulation are not applicable to a company exempt under this paragraph.

§ 225.22 Exempt nonbanking activities and acquisitions.

(a) *Servicing activities.* A bank holding company may, without the Board's prior approval under this subpart, furnish services to or perform services for, or establish or acquire a company that engages solely in furnishing services to or performing services for:

(1) The bank holding company or its subsidiaries in connection with their activities as authorized by law, including services that are necessary to fulfill commitments entered into by the subsidiaries with third parties, if the bank holding company or servicing company complies with the Board's published interpretations and does not act as principal in dealing with third parties; and

(2) The internal operations of the bank holding company or its subsidiaries. Services for the internal operations of the bank holding company or its subsidiaries include, but are not limited to:

(i) Accounting, auditing, and appraising;

(ii) Advertising and public relations;

(iii) Data processing and data transmission services, data bases or facilities;

(iv) Personnel services;

(v) Courier services;

(vi) Holding or operating property used wholly or substantially by a subsidiary in its operations or for its future use;

(vii) Liquidating property acquired from a subsidiary;

(viii) Liquidating property acquired from any sources either prior to May 9, 1956, or the date on which the company became a bank holding company, whichever is later; and

(ix) Selling, purchasing, or underwriting insurance such as blanket bond insurance, group insurance for employees, and property and casualty insurance.

(b) *Safe deposit business.* A bank holding company or nonbank subsidiary may, without the Board's prior approval, conduct a safe deposit business, or acquire voting securities of a company that conducts such a business.

(c) *Nonbanking acquisitions not requiring prior Board approval.* The Board's prior approval is not required under this subpart for the following acquisitions:

(1) *DPC acquisitions.* (i) Voting securities or assets, acquired by foreclosure or otherwise, in the ordinary course of collecting a debt previously contracted (DPC property) in good faith, if the DPC property is divested within two years of acquisition.

(ii) The Board may, upon request, extend this two-year period for up to three additional one-year periods. The Board may permit additional extensions for up to 5 years (for a total of 10 years), for real estate or other assets that are demonstrated by the bank holding company to have value and marketability characteristics similar to real estate.

(iii) Transfers of DPC property within the bank holding company system do not extend any period for divestiture of the property.

(2) *Securities or assets required to be divested by subsidiary.* Voting securities or assets required to be divested by a subsidiary at the request of an examining federal or state authority (except by the Board under the BHC Act or this regulation), if the bank holding company divests the securities or assets within two years from the date acquired from the subsidiary.

(3) *Fiduciary investments.* Voting securities or assets acquired by a bank or other company (other than a trust that is a company) in good faith in a fiduciary capacity, if the voting securities or assets are:

(i) Held in the ordinary course of business; and

(ii) Not acquired for the benefit of the company or its shareholders, employees, or subsidiaries.

(4) *Securities eligible for investment by a national bank.* Voting securities of the kinds and amounts explicitly eligible by federal statute (other than section 4 of the Bank Service Corporation Act, 12 U.S.C. 1864) for investment by a national bank, and voting securities acquired prior to June 30, 1971, in reliance on section 4(c)(5) of the BHC Act and interpretations of

the Comptroller of the Currency under section 5136 of the Revised Statutes (12 U.S.C. 24(7)).

(5) *Securities or property representing 5 percent or less of a company.* Voting securities of a company or property that, in the aggregate, represent 5 percent or less of the outstanding shares of any class of voting securities of a company or a 5 percent interest or less in the property, subject to the provisions of 12 CFR 225.137.

(6) *Securities of investment company.* Voting securities of an investment company that is solely engaged in investing in securities and that does not own or control more than 5 percent of the outstanding shares of any class of voting securities of any company.

(7) *Assets acquired in the ordinary course of business.* Assets of a company acquired in the ordinary course of business, subject to the provisions of 12 CFR 225.132, if the assets relate to activities in which the acquiring company has previously received Board approval under this regulation to engage.

(8) *Asset acquisitions by a lending company or industrial bank.* Assets of an office(s) of a company, all or substantially all of which relate to making, acquiring, or servicing loans if:

(i) The acquiring company has previously received Board approval under this regulation to engage in lending activities or industrial banking activities;

(ii) The assets acquired during any 12-month period do not represent more than 50 percent of the assets (on a consolidated basis) of the acquiring lending company or industrial bank, or more than $100 million, whichever amount is less;

(iii) The assets acquired do not represent more than 50 percent of the selling company's consolidated assets that are devoted to lending activities or industrial banking business;

(iv) The acquiring company notifies the Reserve Bank of the acquisition within 30 days after the acquisition; and

(v) The acquiring company, after giving effect to the transaction, meets the Board's capital adequacy guidelines (appendix A of this part) and the Board has not previously notified the acquiring company that it may not acquire assets under the exemption in this paragraph.

(d) *Acquisition of securities by subsidiary banks.*—(1) *National bank.* A national bank or its subsidiary may, without the Board's approval under this subpart, acquire or retain securities on the basis of section 4(c)(5) of the BHC Act in accordance with the regulations of the Comptroller of the Currency.

(2) *State bank.* A state-chartered bank or its subsidiary may, insofar as federal law is concerned and without the Board's prior approval under this subpart:

(i) Acquire or retain securities, on the basis of section 4(c)(5) of the BHC Act, of the kinds and amounts explicitly eligible by federal statute for investment by a national bank; or

(ii) Acquire or retain all (but, except for directors' qualifying shares, not less than all) of the securities of a company that engages solely in activities in which the parent bank may engage, at locations at which the bank may engage in the activity, and subject to the same limitations as if the bank were engaging in the activity directly.

(e) *Activities and securities of new bank holding companies.* A company that becomes a bank holding company may, for a period of two years, engage in nonbanking activities and control voting securities or assets of a nonbank subsidiary, if the bank holding company engaged in such activities or controlled such voting securities or assets on the date it became a bank holding company. The Board may grant requests for up to three one-year extensions of the two-year period.

(f) *Grandfathered activities and securities.* Unless the Board orders divestiture or termination under section 4(a)(2) of the BHC Act, a ''company covered in 1970,'' as defined in section 2(b) of the BHC Act, may:

(1) Retain voting securities or assets and engage in activities that it has lawfully held or engaged in continuously since June 30, 1968; and

(2) Acquire voting securities of any newly formed company to engage in such activities.

(g) *Securities or activities exempt under Regulation K.* A bank holding company may acquire voting securities or assets and engage in activities as authorized in Regulation K (12 CFR part 211).

§ 225.23 Expedited action for nonbanking proposals by well-run bank holding companies.

(a) *Filing of notice.* A bank holding company that meets the requirements of paragraph (b) of this section may satisfy the notice requirement of this subpart in connection with the acquisition of voting securities or assets of a company engaged in nonbanking activities by providing the appropriate Reserve Bank with a written notice containing the following:

(1) A certification that all of the criteria in paragraph (b) of this section are met;

(2) A description of the transaction that includes identification of the companies involved in the transaction, the activities to be conducted, and a commitment to conduct the proposed activities in conformity with the Board's regulations and orders governing the conduct of the proposed activity;

(3) In the event the proposal involves an acquisition of a going concern, a description of the funding for the transaction, a balance sheet for the acquiring bank holding company reflecting the *pro forma* effect of the acquisition, and the market indexes for each relevant banking market reflecting the *pro forma* effect of the acquisition; and

(4) A request or evidence of a request that the Board publish notice of the proposal in the Federal Register as provided in § 225.24(c)(1).

(b) *Criteria for use of expedited procedure.* The procedure in this paragraph is available only if:

(1) *Well capitalized organization.—(i) Bank holding company.* Both at the time of and immediately after the proposed transaction, the acquiring bank holding company is well capitalized; [1]

(ii) *Insured depository institutions.* Both at the time of and immediately after the transaction;

(A) The lead insured depository institution of the acquiring bank holding company is well capitalized;

(B) Well capitalized insured depository institutions control at least 80 percent of the total assets of insured depository institutions controlled by the acquiring bank holding company; and

(C) No insured depository institution controlled by the acquiring bank holding company is undercapitalized;

(2) *Well managed organization.* At the time of the transaction, the acquiring bank holding company, its lead insured depository institution, and insured depository institutions that control at least 80 percent of the total assets of insured depository institutions controlled by such holding company are well managed;

(3) *Permissible activity.*

(i) The Board has determined by regulation or order that each activity proposed to be conducted is so closely related to banking or managing or controlling banks as to be a proper incident thereto; [2] and

[1] For purposes of this paragraph, a bank holding company with assets under $150 million will be deemed to have met the requirements of this paragraph if the parent bank holding company's ratio of *pro forma* debt to equity is 1.0:1 or less and the proposal in all other respects meets the requirements of appendix C of this part.

[2] In the case of the acquisition of a savings association, the bank holding company and its

(ii) The Board has not indicated that proposals to engage in the proposed activity are subject to the notice procedure provided in § 225.24.

(4) *Competitive criteria*—(i) *Competitive screen.* In the case of the acquisition of a going concern, the acquisition, without regard to any divestitures proposed by the acquiring bank holding company, does not cause:

(A) The acquiring bank holding company to control in excess of 35 percent of the market share in any relevant market, or

(B) The Herfindahl-Hirschman index to increase by more than 200 points in any relevant market with a post-acquisition index of at least 1800;

(ii) *Other competitive factors.* The Board has not indicated that the transaction is subject to close scrutiny on competitive grounds;

(5) *Size of acquisition.* In the case of an acquisition, the book value of the aggregate risk-weighted assets acquired by the acquiring bank holding company in all transactions approved during the previous 12 months under this section and § 225.14 does not exceed 35 percent of the consolidated risk-weighted assets of the acquiring bank holding company;

(6) *Notification.* The bank holding company has not been notified by the Board prior to the expiration of the period in subsection (d) that a notice under § 225.24 is required.

(c) *Action on notice.* The Board or the appropriate Reserve Bank shall act on a proposal submitted under this section or notify the bank holding company that the transaction is subject to the procedure in § 225.24 before the later of:

(1) 15 calendar days following the filing of all of the information required in paragraph (a) of this section; or

(2) 3 business days following the close of the public comment period;

(d) *Acceptance of notice in event expedited procedure not available.* In the event that the Board or the Reserve Bank determines after the filing of a notice under this section that a bank holding company may not use the procedure in this section and must file a notice under § 225.24, the notice shall be deemed accepted for purposes of § 225.24 as of the date that the notice was filed under this section.

§ 225.24 Procedures for other nonbanking proposals.

(a) *Notice required for nonbanking activities.* Except as provided in § 225.23, a notice for the Board's prior approval under § 225.21(a) to engage in or acquire a company engaged in a nonbanking activity shall be filed by a bank holding company (including a company seeking to become a bank holding company) with the appropriate Reserve Bank in accordance with this section and the Board's Rules of Procedure (12 CFR 262.3).

(1) *Engaging de novo in listed activities.* A bank holding company seeking to commence or to engage *de novo,* either directly or through a subsidiary, in a nonbanking activity listed in § 225.28 shall file a notice containing the following:

(i) A description of the activities to be conducted;

(ii) The identity of the company that will conduct the activity; and

(iii) If the notificant proposes to conduct the activity through an existing subsidiary, a description of the existing activities of the subsidiary.

(2) *Acquiring company engaged in listed activities.* A bank holding company seeking to acquire or control voting securities or assets of a company engaged in a nonbanking activity listed in § 225.28 shall file a notice containing the following:

(i) A description of the proposal, including a description of each proposed activity, and the effect of the proposal on competition among entities engaging in each proposed activity;

(ii) The identity of any entity involved in the proposal, and if the notificant proposes to conduct the activity through an existing subsidiary, a description of the existing activities of the subsidiary;

(iii) A statement of the public benefits that can reasonably be expected to result from the proposal; and

(iv) A description of the terms and sources of funds for the transaction, a copy of any pertinent purchase agreement(s), balance-sheet and income statements for the most recent fiscal quarter and year-end for any company to be acquired, parent-company-only and consolidated *pro forma* balance sheets for the notificant as of the most recent fiscal quarter, and calculations of *pro forma* consolidated risk-based capital ratios and leverage ratio for the notificant as of the most recent fiscal quarter.

(3) *Engaging in or acquiring company to engage in unlisted activities.* A bank holding company seeking to commence or to engage *de novo,* or to acquire or control voting securities or assets of a company engaged in, any activity not listed in § 225.28 shall file a notice containing the following:

(i) Evidence that the proposed activity is so closely related to banking or managing or controlling banks as to be a proper incident thereto, or, in the event that the Board has previously determined by order that the activity is permissible for a bank holding company to conduct, a commitment to comply with all conditions and limitations that have been established by the Board governing the activity; and

(ii) The information required in paragraphs (a)(1) or (a)(2), as appropriate.

(b) *Notice provided to Board.* The Reserve Bank shall immediately send to the Board a copy of any notice received under paragraphs (a)(2) or (a)(3) of this section.

(c) *Notice to public*—(1) *Listed activities and activities approved by order.*

(i) In a case involving an activity listed in § 225.28 or previously approved by the Board by order, the Reserve Bank shall notify the Board for publication in the Federal Register immediately upon receipt by the Reserve Bank of:

(A) A notice under this section; or

(B) A written request that notice of a proposal under this section or § 225.23 be published in the Federal Register. Such a request may be made up to 30 calendar days prior to submission of a notice under this subpart.

(ii) The Federal Register notice published under this paragraph shall invite public comment on the proposal, generally for a period of 15 days.

(2) *New activities*—(i) *In general.* In the case of a notice under this subpart involving an activity that is not listed in § 225.28 and that has not been previously approved by the Board by order, the Board shall send notice of the proposal to the Federal Register for publication, unless the Board determines that the notificant has not demonstrated that the activity is so closely related to banking or to managing or controlling banks as to be a proper incident thereto. The Federal Register notice shall invite public comment on the proposal for a reasonable period of time, generally for 30 days.

(ii) *Time for publication.* The Board shall send the notice required under this paragraph to the Federal Register within 10 business days of acceptance by the Reserve Bank. The Board may extend the 10-day period for an additional 30 calendar days upon notice to the notificant. In the event notice of a proposal is not published for comment, the Board shall inform the notificant of the reasons for the decision.

(d) *Action on notices*—(1) *Reserve Bank action*—(i) *In general.* Within 30 calendar days after receipt by the Reserve Bank of a notice filed pursuant

subsidiary depository institutions must also meet the CRA requirements of § 225.14(b)(3).

to paragraphs (a)(1) or (a)(2) of this section, the Reserve Banks shall—

(A) Approve the notice; or

(B) Refer the notice to the Board for decision because action under delegated authority is not appropriate.

(ii) *Return of incomplete notice.* Within 7 calendar days of receipt, the Reserve Bank may return any notice as informationally incomplete that does not contain all of the information required by this subpart. The return of such a notice shall be deemed action on the notice.

(iii) *Notice of action.* The Reserve Bank shall promptly notify the bank holding company of any action, referral, or extension under this paragraph (d)(1) of this section.

(iv) *Close of public comment period.* The Reserve Bank shall not approve any notice under this paragraph (d)(1) of this section prior to the third business day after the close of the public comment period, unless an emergency exists that requires expedited or immediate action.

(2) *Board action*—(i) *Internal schedule.* The Board seeks to act on every notice referred to it for decision within 60 days of the date that the notice is filed with the Reserve Bank. If the Board is unable to act within this period, the Board will notify the notificant and explain the reasons and the date by which the Board expects to act.

(ii) *Required time limit for Board action.* The Board shall act on any notice under this section that is referred to it for decision within 60 calendar days after the submission of a complete notice.

(iii) *Extension of required period for action*—(A) *In general.* The Board may extend the 60-day period required for Board action under paragraph (d)(2)(ii) of this section for an additional 30 days upon notice to the notificant.

(B) *Unlisted activities.* If a notice involves a proposal to engage in an activity that is not listed in § 225.28, the Board may extend the period required for Board action under paragraph (d)(2)(ii) of this section for an additional 90 days. This 90-day extension is in addition to the 30-day extension period provided in paragraph (d)(2)(iii)(A) of this section. The Board shall notify the notificant that the notice period has been extended and explain the reasons for the extension.

(3) *Requests for additional information.* The Board or the Reserve Bank may at any time request any additional information that either believes is needed for a decision on any notice under this subpart.

(4) *Tolling of period.* The Board or the Reserve Bank, as the case may be, may at any time extend or toll the time period for action on a notice for any period with the consent of the notificant.

§ 225.25 Duration of approval, hearings, alteration of activities and other matters.

(a) *Duration of approval.* A bank holding company that receives approval pursuant to this subpart to engage *de novo* in a nonbanking activity may conduct that activity *de novo* at any time following the date approval is received so long as:

(1) At the time the activity is commenced, the bank holding company has one of the highest two composite inspection ratings and is adequately capitalized;

(2) Prior to commencing the activity, the Board has not informed the company that it may not commence the activity; and

(3) The order approving the activity does not specifically require that the activity be commenced within a given period.

(b) *Hearings.* (1) *Procedure to request hearing.* Any request for a hearing on a notice under this subpart shall comply with the provisions of 12 CFR 262.3(e).

(2) *Determination to hold hearing.* The Board may order a formal or informal hearing or other proceeding on a notice as provided in 12 CFR 262.3(i)(2). The Board shall order a hearing only if there are disputed issues of material fact that cannot be resolved in some other manner.

(3) *Extension of period for hearing.* The Board may extend the time for action on any notice for such time as is reasonably necessary to conduct a hearing and evaluate the hearing record. Such extension shall not exceed 91 calendar days after the date of submission to the Board of the complete record on the notice. The procedures for computation of the 91-day rule as set forth in § 225.16(e) apply to notices under this subpart that involve hearings.

(c) *Approval through failure to act*—(1) Except as provided in paragraph (b) of this section or § 225.24(d)(4), a notice under this subpart shall be deemed to be approved at the conclusion of the period that begins on the date the complete notice is received by the Reserve Bank or the Board and that ends 60 calendar days plus any applicable extension and tolling period thereafter.

(2) *Complete notice.* For purposes of paragraph (c) of this section, a notice shall be deemed to be complete for purposes of this subpart at such time as it contains all information required by this subpart and all other information requested by the Board or the Reserve Bank in connection with the particular notice.

(d) *Notice to expand or alter nonbanking activities.*—(1) *De novo expansion.* A notice under this subpart is required to open a new office or to form a subsidiary to engage in, or to relocate an existing office engaged in, a nonbanking activity that the Board has previously approved for the bank holding company under this regulation, only if:

(i) The Board's prior approval was limited geographically;

(ii) The activity is to be conducted in a country outside of the United States and the bank holding company has not previously received prior Board approval under this regulation to engage in the activity in that country; or

(iii) The Board or appropriate Reserve Bank has notified the company that a notice under this subpart is required.

(2) *Activities outside United States.* With respect to activities to be engaged in outside the United States that require approval under this subpart, the procedures of this section apply only to activities to be engaged in directly by a bank holding company that is not a qualifying foreign banking organization or by a nonbank subsidiary of a bank holding company approved under this subpart. Regulation K (12 CFR part 211) governs other international operations of bank holding companies.

(3) *Alteration of nonbanking activity.* Unless otherwise permitted by the Board, a notice under this subpart is required to alter a nonbanking activity in any material respect from that considered by the Board in acting on the application or notice to engage in the activity.

(e) *Emergency thrift-institution acquisitions.* In the case of a notice to acquire a thrift institution, the Board may modify or dispense with the public-notice and hearing requirements of this subpart if the Board finds that an emergency exists that requires the Board to act immediately and the primary federal regulator of the institution concurs.

§ 225.26 Factors considered in acting on nonbanking proposals.

(a) *In general.* In evaluating a notice under § 225.23 or § 225.24, the Board shall consider whether the performance by the notificant of the activities can reasonably be expected to produce benefits to the public (such as greater convenience, increased competition, and gains in efficiency) that outweigh possible adverse effects (such as undue concentration of resources, decreased or unfair competition, conflicts of interest, and unsound banking practices).

(b) *Financial and managerial resources.* Consideration of the factors in paragraph (a) of this section includes an evaluation of the financial and managerial resources of the notificant, including its subsidiaries and any company to be acquired, the effect of the proposed transaction on those resources, and the management expertise, internal control and risk management systems, and capital of the entity conducting the activity.

(c) *Competitive effect of de novo proposals.* Unless the record demonstrates otherwise, the commencement or expansion of a nonbanking activity *de novo* is presumed to result in benefits to the public through increased competition.

(d) *Denial for lack of information.* The Board may deny any notice submitted under this subpart if the notificant neglects, fails, or refuses to furnish all information required by the Board.

§ 225.27 Procedures for determining scope of nonbanking activities.

(a) *Advisory opinions regarding the scope of permissible nonbanking activities.*—(1) *Requests for an advisory opinion.* Any person may submit a request to the Board for an advisory opinion regarding the scope any permissible nonbanking activity. The request must be submitted in writing to the Board and must identify the proposed parameters of the activity or a description of the service or product that is intended to be provided as well as an explanation supporting an interpretation regarding the scope of the permissible nonbanking activity.

(2) *Response to a request.* The Board shall provide an advisory opinion within 45 days of receiving a written request under this subsection.

(b) *Procedure for consideration of new activities.*—(1) *Initiation of proceeding.* The Board may at any time, on its own initiative or in response to a written request from any person, initiate a proceeding to determine whether any activity is so closely related to banking or managing or controlling banks as to be a proper incident thereto.

(2) *Requests for determination.* Any request that the Board consider that an activity is so closely related to banking or managing or controlling banks as to be a proper incident thereto shall be submitted to the Board in writing and shall contain evidence that the proposed activity is so closely related to banking or managing or controlling banks as to be a proper incident thereto.

(3) *Publication.* The Board shall publish in the Federal Register notice that it is considering the permissibility of a new activity and invite public comment for a period of at least 30 calendar days. In the case of a request submitted under paragraph (b) of this section, the Board may determine not to publish notice of the request if the Board determines that the requester has provided no reasonable basis for a determination that the activity is so closely related to banking or managing or controlling banks as to be a proper incident thereto and notifies the requester of that determination.

(4) *Comments and hearing requests.* Any comment and any request for a hearing regarding a proposal under this section shall comply with the provisions of § 262.3(e) of the Board's Rules of Procedure (12 CFR 262.3(e)).

§ 225.28 List of permissible nonbanking activities.

(a) *Closely related nonbanking activities.* The activities listed in paragraph (b) of this section are so closely related to banking or managing or controlling banks as to be a proper incident thereto and may be engaged in by a bank holding company or a subsidiary thereof in accordance with and subject to the requirements of this regulation.

(b) *Activities determined by regulation to be permissible.*— (1) *Extending credit and servicing loans.* Making, acquiring, brokering or servicing loans or other extensions of credit (including issuing letters of credit and accepting drafts) for the company's account or for the account of others.

(2) *Activities related to extending credit.* Any activity usual in connection with making, acquiring, brokering or servicing loans or other extensions of credit, as determined by the Board. The Board has determined that the following activities are usual in connection with making, acquiring, brokering or servicing loans or other extensions of credit:

(i) *Real estate and personal property appraising.* Performing appraisals of real estate and tangible and intangible personal property, including securities.

(ii) *Arranging commercial real estate equity financing.* Acting as intermediary for the financing of commercial or industrial income-producing real estate by arranging for the transfer of the title, control and risk of such a real estate project to one or more investors, if the bank holding company and its affiliates do not have an interest in, or participate in managing or developing, a real estate project for which it arranges equity financing, and do not promote or sponsor the development of such property.

(iii) *Check-guaranty services.* Authorizing a subscribing merchant to accept personal checks tendered by the merchant's customers in payment for goods and services and purchasing from the merchant validly authorized checks that are subsequently dishonored.

(iv) *Collection agency services.* Collecting overdue accounts receivable, either retail or commercial.

(v) *Credit bureau services.* Maintaining information related to the credit history of consumers and providing that information to a credit grantor who is considering a borrower's application for credit or who has extended credit to the borrower.

(vi) *Asset management, servicing, and collection activities.* Engaging under contract with a third party in asset management, servicing, and collection [3] for assets of a type that an insured depository institution may originate and own, if the company does not engage in real property management or real estate brokerage services as part of these services.

(vii) *Acquiring debt in default.* Acquiring debt that is in default at the time of acquisition, if the company:

(A) Divests shares or assets securing debt in default that are not permissible investments for bank holding companies within the time period required for divestiture of property acquired in satisfaction of a debt previously contracted under § 225.12(b); [4]

(B) Stands only in the position of a creditor and does not purchase equity of obligors of debt in default (other than equity that may be collateral for such debt); and

(C) Does not acquire debt in default secured by shares of a bank or bank holding company.

(viii) *Real-estate settlement servicing.* Providing real-estate settlement services.[5]

(3) *Leasing personal or real property.* Leasing personal or real property or acting as agent, broker, or adviser in leasing such property if:

(i) The lease is on a nonoperating basis; [6]

[3] Asset management services include acting as agent in the liquidation or sale of loans and collateral for loans, including real estate and other assets acquired through foreclosure or in satisfaction of debts previously contracted.

[4] For this purpose, the divestiture period for property begins on the date that the debt is acquired regardless of when legal title to the property is acquired.

[5] For purposes of this section, real-estate settlement services do not include providing title insurance as principal, agent or broker.

[6] For purposes of the leasing of automobiles, the requirement that the lease be on a nonoperating basis means that the bank holding company may not, directly or indirectly: (1) Provide for the servicing, repair, or maintenance of the leased vehicle during the lease term; (2) purchase parts

Continued

(ii) The initial term of the lease is at least 90 days;

(iii) In the case of leases involving real property:

(A) At the inception of the initial lease the effect of the transaction will yield a return that will compensate the lessor for not less than the lessor's full investment in the property plus the estimated total cost of financing the property over the term of the lease from rental payments, estimated tax benefits and the estimated residual value of the property at the expiration of the initial lease; and

(B) The estimated residual value of property for purposes of paragraph (b)(3)(iii)(A) of this section shall not exceed 25 percent of the acquisition cost of the property to the lessor.

(4) *Operating nonbank depository institutions*—(i) *Industrial banking.* Owning, controlling or operating an industrial bank, Morris Plan bank, or industrial loan company, so long as the institution is not a bank.

(ii) *Operating a savings association.* Owning, controlling or operating a savings association, if the savings association engages only in deposit-taking activities and lending and other activities that are permissible for bank holding companies under this subpart C.

(5) *Trust company functions.* Performing functions or activities that may be performed by a trust company (including activities of a fiduciary, agency, or custodial nature), in the manner authorized by federal or state law, so long as the company is not a bank for purposes of section 2(c) of the Bank Holding Company Act.

(6) *Financial and investment advisory activities.* Acting as investment or financial advisor to any person, including (without in any way limiting the foregoing):

(i) Serving as investment adviser (as defined in section 2(a)(20) of the Investment Company Act of 1940, 15 U.S.C. 80a–2(a)(20)), to an investment company registered under that act, including sponsoring, organizing, and managing a closed-end investment company;

(ii) Furnishing general economic information and advice, general economic statistical forecasting services and industry studies;

(iii) Providing advice in connection with mergers, acquisitions, divestitures, joint ventures, leveraged buyouts, recapitalizations, capital structurings, and financing transactions, and conducting financial feasibility studies;[7]

(iv) Providing information, statistical forecasting and advice with respect to any transaction in foreign exchange, forward contracts, options, futures, swaps or similar transactions;

(v) Providing educational courses, and instructional materials to consumers on individual financial management matters; and

(vi) Providing tax-planning and tax-preparation services to any person.

(7) *Agency transactional services for customer investments*—(i) *Securities brokerage.* Providing securities brokerage services, whether alone or in combination with investment advisory services, and incidental activities (including related securities credit activities and custodial services), if the securities brokerage services are restricted to buying and selling securities solely as agent for the account of customers and do not include securities underwriting or dealing.

(ii) *Riskless principal transactions.* Buying and selling in the secondary market all types of securities on the order of customers as a ''riskless principal'' to the extent of engaging in a transaction in which the company, after receiving an order to buy (or sell) a security from a customer, purchases (or sells) the security for its own account to offset a contemporaneous sale to (or purchase from) the customer. This does not include:

(A) Selling bank-ineligible securities[8] at the order of a customer that is the issuer of the securities or selling bank-ineligible securities in any transaction where the company has a contractual agreement to place the securities as agent of the issuer;

(B) Acting as a riskless principal in any transaction involving a bank-ineligible security for which the company or any of its affiliates makes a market;[9]

(C) Engaging in any riskless principal transaction involving any bank-ineligible security carried in the inventory of the company or any of its affiliates;

(D) Acting as riskless principal in any transaction on behalf of any U.S. or foreign affiliate that engages in bank-ineligible securities underwriting and dealing.

(iii) *Private placement services.* Acting as agent for the private placement of securities in accordance with the requirements of the Securities Act of 1933 (1933 Act) and the rules of the Securities and Exchange Commission (SEC) if the company does not purchase or repurchase for its own account the securities being placed, or hold in inventory unsold portions of issues of these securities.

(iv) *Futures commission merchant.* Acting as a futures commission merchant (FCM) for unaffiliated persons in the execution, clearance, or execution and clearance of futures contracts and options on futures contracts traded on an exchange in the United States or abroad if—

(A) The activity is conducted through a separately incorporated subsidiary of the bank holding company, which may engage in activities other than FCM activities;

(B) The subsidiary does not become a clearing member of any exchange or clearing association that requires the parent corporation of the clearing member to also become a member of that exchange or clearing association, unless a waiver of the requirement is obtained; and

(C) In connection with clearing activities in which the subsidiary does not also execute the transaction, the clearing subsidiary—

(*1*) Does not serve as a primary or qualifying clearing firm for the customer; and

(*2*) Clears trades pursuant to customer and other agreements that grant the subsidiary the right to decline to accept those trades that the subsidiary has determined present unacceptable risks.

(v) *Other transactional services.* Providing to customers as agent transactional services with respect to any transaction described in paragraph (b)(8) of this section, that the company may engage in for its own account.

(8) *Investment transactions as principal.*—(i) *Underwriting and dealing in government obligations and money market instruments.* Underwriting and dealing in obligations of the United

---

and accessories in bulk or for an individual vehicle after the lessee has taken delivery of the vehicle; (3) provide for the loan of an automobile during servicing of the leased vehicle; (4) purchase insurance for the lessee; or (5) provide for the renewal of the vehicle's license merely as a service to the lessee where the lessee could renew the license without authorization from the lessor. The bank holding company may arrange for a third party to provide these services or products.

[7] Feasibility studies do not include assisting management with the planning or marketing for a given project or providing general operational or management advice.

[8] A bank-ineligible security is any security that a State member bank is not permitted to underwrite or deal in under 12 U.S.C. 24 and 335.

[9] A company or its affiliates may not enter quotes for specific bank-ineligible securities in any dealer quotation system in connection with the company's riskless principal transactions; except that the company or its affiliates may enter ''bid'' or ''ask'' quotations, or publish ''offering wanted'' or ''bid wanted'' notices on trading systems other than NASDAQ or an exchange, if company or its affiliate does not enter price quotations on different sides of the market for a particular security during any two day period.

States, general obligations of states and their political subdivisions, and other obligations that state member banks of the Federal Reserve System may be authorized to underwrite and deal in under 12 U.S.C. 24 and 335, including banker's acceptances and certificates of deposit, under the same limitations as would be applicable if the activity were performed by the bank holding company's subsidiary member banks or its subsidiary nonmember banks as if they were member banks.

(ii) *Trading activities.* Engaging as principal for the account of the bank holding company or any of its affiliates in transactions in:

(A) Foreign exchange, or

(B) Forward contracts, options, futures, swaps, and similar contracts, whether traded on exchanges or not, on any financial asset (including gold, silver, platinum or palladium), nonfinancial asset, or group or index of value thereof, other than a bank ineligible security,[10] if:

(*1*) A state member bank is authorized to invest in the asset underlying the contract;

(*2*) The contract requires cash settlement; or

(*3*) The contract allows for assignment, termination or offset prior to delivery or expiration and the company makes every reasonable effort to avoid taking or making delivery.

(iii) *Buying and selling bullion and related activities.* Buying and selling gold, silver, platinum and palladium bars, rounds, bullion and coins for the company's own account and the account of others and providing incidental services such as arranging for the storage, safe custody, assaying and shipment of gold, silver, platinum and palladium.

(9) *Management consulting and counseling activities.*—(i) *Management consulting.* (A) Providing management consulting advice:[11]

(*1*) On any matter to unaffiliated depository institutions, including commercial banks, savings and loan associations, savings banks, credit unions, industrial banks, Morris Plan banks, cooperative banks, industrial loan companies, trust companies and branches or agencies of foreign banks;

(*2*) On any financial, economic, accounting or audit matter to any other company.

(B) A company conducting management consulting activities under this subparagraph and any affiliate of such company may not—

(*1*) Own or control, directly or indirectly, more than 5 percent of the voting securities of the client institution; and

(*2*) Allow a management official, as defined in 12 CFR 212.2(h), of the company or any of its affiliates to serve as a management official of the client institution, except where such interlocking relationship is permitted pursuant to an exemption granted under 12 CFR 212.4(b) or otherwise permitted by the Board.

(C) A company conducting management consulting activities may provide management consulting services to customers not described in paragraph (b)(9)(i)(A)(*1*) of this section or regarding matters not described in paragraph (b)(9)(i)(A)(*2*) if the total annual revenue derived from those management consulting services does not exceed 30 percent of the company's total annual revenue derived from management consulting activities.

(ii) *Employee benefits consulting services.* Providing consulting services to employee benefit, compensation and insurance plans, including designing plans, assisting in the implementation of plans, providing administrative services to plans, and developing employee communication programs for plans.

(iii) *Career counseling services.* Providing career counseling services to:

(A) A financial organization[12] and individuals currently employed by, or recently displaced from, a financial organization;

(B) Individuals who are seeking employment at a financial organization; and

(C) Individuals who are currently employed in or who seek positions in the finance, accounting and audit departments of any company.

(10) *Support services.*—(i) *Courier services.* Providing courier services for—

(A) Checks, commercial papers, documents, and written instruments (excluding currency or bearer-type negotiable instruments) that are exchanged among banks and financial institutions; and

(B) Audit and accounting media of a banking or financial nature and other business records and documents used in processing such media.[13]

(ii) *Printing and selling MICR-encoded items.* Printing and selling checks and related documents, including corporate image checks, cash tickets, voucher checks, deposit slips, savings withdrawal packages, and other forms that require Magnetic Ink Character Recognition (MICR) encoding.

(11) *Insurance agency and underwriting.*—(i) *Credit insurance.* Acting as principal, agent, or broker for insurance (including home mortgage redemption insurance) that is—

(A) directly related to an extension of credit by the bank holding company or any of its subsidiaries; and

(B) limited to ensuring the repayment of the outstanding balance due on the extension of credit[14] in the event of the death, disability, or involuntary unemployment of the debtor.

(ii) *Finance company subsidiary.* Acting as agent or broker for insurance directly related to an extension of credit by a finance company[15] that is a subsidiary of a bank holding company, if:

(A) The insurance is limited to ensuring repayment of the outstanding balance on such extension of credit in the event of loss or damage to any property used as collateral for the extension of credit; and

(B) The extension of credit is not more than $10,000, or $25,000 if it is to finance the purchase of a residential manufactured home[16] and the credit is secured by the home; and

(C) The applicant commits to notify borrowers in writing that:

(1) They are not required to purchase such insurance from the applicant;

(2) Such insurance does not insure any interest of the borrower in the collateral; and

[10] A bank-ineligible security is any security that a State member bank is not permitted to underwrite or deal in under 12 U.S.C. 24 and 335.

[11] In performing this activity, bank holding companies are not authorized to perform tasks or operations or provide services to client institutions either on a daily or continuing basis, except as necessary to instruct the client institution on how to perform such services for itself. See also the Board's interpretation of bank management consulting advice (12 CFR 225.131).

[12] The term *financial organization* refers to insured depository institution holding companies and their subsidiaries, other than nonbanking affiliates of diversified savings and loan holding companies that engage in activities not permissible under section 4(c)(8) of the Bank Holding Company Act (12 U.S.C. 1842(c)(8)).

[13] See also the Board's interpretation on courier activities (12 CFR 225.129), which sets forth conditions for bank holding company entry into the activity.

[14] ''Extension of credit'' includes direct loans to borrowers, loans purchased from other lenders, and leases of real or personal property so long as the leases are nonoperating and full-payout leases that meet the requirements of paragraph (b)(5) of this section.

[15] ''Finance company'' includes all non-deposit-taking financial institutions that engage in a significant degree of consumer lending (excluding lending secured by first mortgages) and all financial institutions specifically defined by individual states as finance companies and that engage in a significant degree of consumer lending.

[16] These limitations increase at the end of each calendar year, beginning with 1982, by the percentage increase in the Consumer Price Index for Urban Wage Earners and Clerical Workers published by the Bureau of Labor Statistics.

(3) The applicant will accept more comprehensive property insurance in place of such single-interest insurance.

(iii) *Insurance in small towns.* Engaging in any insurance agency activity in a place where the bank holding company or a subsidiary of the bank holding company has a lending office and that:

(A) Has a population not exceeding 5,000 (as shown in the preceding decennial census); or

(B) Has inadequate insurance agency facilities, as determined by the Board, after notice and opportunity for hearing.

(iv) *Insurance-agency activities conducted on May 1, 1982.* Engaging in any specific insurance-agency activity [17] if the bank holding company, or subsidiary conducting the specific activity, conducted such activity on May 1, 1982, or received Board approval to conduct such activity on or before May 1, 1982.[18] A bank holding company or subsidiary engaging in a specific insurance agency activity under this clause may:

(A) Engage in such specific insurance agency activity only at locations—

(*1*) In the state in which the bank holding company has its principal place of business (as defined in 12 U.S.C. 1842(d));

(*2*) In any state or states immediately adjacent to such state; and

(*3*) In any state in which the specific insurance-agency activity was conducted (or was approved to be conducted) by such bank holding company or subsidiary thereof or by any other subsidiary of such bank holding company on May 1, 1982; and

(B) Provide other insurance coverages that may become available after May 1, 1982, so long as those coverages insure against the types of risks as (or are otherwise functionally equivalent to) coverages sold or approved to be sold on May 1, 1982, by such bank holding company or subsidiary.

(v) *Supervision of retail insurance agents.* Supervising on behalf of insurance underwriters the activities of retail insurance agents who sell—

(A) Fidelity insurance and property and casualty insurance on the real and personal property used in the operations of the bank holding company or its subsidiaries; and

(B) Group insurance that protects the employees of the bank holding company or its subsidiaries.

(vi) *Small bank holding companies.* Engaging in any insurance-agency activity if the bank holding company has total consolidated assets of $50 million or less. A bank holding company performing insurance-agency activities under this paragraph may not engage in the sale of life insurance or annuities except as provided in paragraphs (b)(11) (i) and (iii) of this section, and it may not continue to engage in insurance-agency activities pursuant to this provision more than 90 days after the end of the quarterly reporting period in which total assets of the holding company and its subsidiaries exceed $50 million.

(vii) *Insurance-agency activities conducted before 1971.* Engaging in any insurance-agency activity performed at any location in the United States directly or indirectly by a bank holding company that was engaged in insurance-agency activities prior to January 1, 1971, as a consequence of approval by the Board prior to January 1, 1971.

(12) *Community development activities*—(i) *Financing and investment activities.* Making equity and debt investments in corporations or projects designed primarily to promote community welfare, such as the economic rehabilitation and development of low-income areas by providing housing, services, or jobs for residents.

(ii) *Advisory activities.* Providing advisory and related services for programs designed primarily to promote community welfare.

(13) *Money orders, savings bonds, and traveler's checks.* The issuance and sale at retail of money orders and similar consumer-type payment instruments; the sale of U.S. savings bonds; and the issuance and sale of traveler's checks.

(14) *Data processing.* (i) Providing to others data processing and data transmission services, facilities (including data processing and data transmission hardware, software, documentation or operating personnel), data bases, advice and access to such services, facilities, or data bases by any technological means, if:

(A) The data to be processed or furnished are financial, banking, or economic; and

(B) The hardware provided in connection therewith is offered only in conjunction with software designed and marketed for the processing and transmission of financial, banking, or economic data, and where the general purpose hardware does not constitute more than 30 percent of the cost of any packaged offering.

(ii) A company conducting data processing and data transmission activities may conduct data processing and data transmission activities not described in paragraph (b)(14)(i)(A) of this section if the total annual revenue derived from those data processing and data transmission activities does not exceed 30 percent of the company's total annual revenues derived from data processing and data transmission activities.

5. Subpart E is revised to read as follows:

Subpart E—Change in Bank Control

Sec.
225.41 Transactions requiring prior notice.
225.42 Transactions not requiring prior notice.
225.43 Procedures for filing, processing, publishing and acting on notices.
225.44 Reporting of stock loans.

Subpart E—Change in Bank Control

§ 225.41 Transactions requiring prior notice.

(a) *Prior notice requirement.* Any person acting directly or indirectly, or through or in concert with one or more persons, shall give the Board 60 days written notice, as specified in § 225.43 of this subpart, before acquiring control of a state member bank or bank holding company, unless the acquisition is exempt under § 225.42.

(b) *Definitions.* For purposes of this subpart:

(1) *Acquisition* includes a purchase, assignment, transfer, or pledge of voting securities, or an increase in percentage ownership of a state member bank or a bank holding company resulting from a redemption of voting securities.

(2) *Acting in concert* includes knowing participation in a joint activity or parallel action towards a common goal of acquiring control of a state member bank or bank holding company whether or not pursuant to an express agreement.

(3) *Immediate family* includes a person's father, mother, stepfather, stepmother, brother, sister, stepbrother, stepsister, son, daughter, stepson, stepdaughter, grandparent, grandson, granddaughter, father-in-law, mother-in-law, brother-in-law, sister-in-law, son-in-law, daughter-in-law, the spouse of any of the foregoing, and the person's spouse.

(c) *Acquisitions requiring prior notice.*—(1) *Acquisition of control.* The

[17] Nothing contained in this provision shall preclude a bank holding company subsidiary that is authorized to engage in a specific insurance-agency activity under this clause from continuing to engage in the particular activity after merger with an affiliate, if the merger is for legitimate business purposes and prior notice has been provided to the Board.

[18] For the purposes of this paragraph, activities engaged in on May 1, 1982, include activities carried on subsequently as the result of an application to engage in such activities pending before the Board on May 1, 1982, and approved subsequently by the Board or as the result of the acquisition by such company pursuant to a binding written contract entered into on or before May 1, 1982, of another company engaged in such activities at the time of the acquisition.

acquisition of voting securities of a state member bank or bank holding company constitutes the acquisition of control under the Bank Control Act, requiring prior notice to the Board, if, immediately after the transaction, the acquiring person (or persons acting in concert) will own, control, or hold with power to vote 25 percent or more of any class of voting securities of the institution.

(2) *Rebuttable presumption of control.* The Board presumes that an acquisition of voting securities of a state member bank or bank holding company constitutes the acquisition of control under the Bank Control Act, requiring prior notice to the Board, if, immediately after the transaction, the acquiring person (or persons acting in concert) will own, control, or hold with power to vote 10 percent or more of any class of voting securities of the institution, and if:

(i) The institution has registered securities under section 12 of the Securities Exchange Act of 1934 (15 U.S.C. 78l); or

(ii) No other person will own, control or hold the power to vote a greater percentage of that class of voting securities immediately after the transaction.[1]

(d) *Rebuttable presumption of concerted action.* The following persons shall be presumed to be acting in concert for purposes of this subpart:

(1) A company and any controlling shareholder, partner, trustee, or management official of such company if both the company and the person own voting securities of the state member bank or bank holding company;

(2) An individual and the individual's immediate family;

(3) Companies under common control;

(4) Persons who are parties to any agreement, contract, understanding, relationship, or other arrangement, whether written or otherwise, regarding the acquisition, voting, or transfer of control of voting securities of a state member bank or bank holding company, other than through a revocable proxy as described in § 225.42(a)(5) of this subpart;

(5) Persons that have made, or propose to make, a joint filing under sections 13 or 14 of the Securities Exchange Act of 1934 (15 U.S.C. 78m or 78n), and the rules promulgated thereunder by the Securities and Exchange Commission; and

(6) A person and any trust for which such person serves as trustee.

(e) *Acquisitions of loans in default.* The Board presumes an acquisition of a loan in default that is secured by voting securities of a state member bank or bank holding company to be an acquisition of the underlying securities for purposes of this section.

(f) *Other transactions.* Transactions other than those set forth in paragraph (c) of this section resulting in a person's control of less than 25 percent of a class of voting securities of a state member bank or bank holding company are not deemed by the Board to constitute control for purposes of the Bank Control Act.

(g) *Rebuttal of presumptions.* Prior notice to the Board is not required for any acquisition of voting securities under the presumption of control set forth in this section, if the Board finds that the acquisition will not result in control. The Board will afford any person seeking to rebut a presumption in this section an opportunity to present views in writing or, if appropriate, orally before its designated representatives at an informal conference.

§ 225.42 Transactions not requiring prior notice.

(a) *Exempt transactions.* The following transactions do not require notice to the Board under this subpart:

(1) *Existing control relationships.* The acquisition of additional voting securities of a state member bank or bank holding company by a person who:

(i) Continuously since March 9, 1979 (or since that institution commenced business, if later), held power to vote 25 percent or more of any class of voting securities of that institution; or

(ii) is presumed, under § 225.41(c)(2) of this subpart, to have controlled the institution continuously since March 9, 1979, if the aggregate amount of voting securities held does not exceed 25 percent or more of any class of voting securities of the institution or, in other cases, where the Board determines that the person has controlled the bank continuously since March 9, 1979;

(2) *Increase of previously authorized acquisitions.* Unless the Board or the Reserve Bank otherwise provides in writing, the acquisition of additional shares of a class of voting securities of a state member bank or bank holding company by any person (or persons acting in concert) who has lawfully acquired and maintained control of the institution (for purposes of § 225.41(c) of this subpart) after complying with the procedures and receiving approval to acquire voting securities of the institution under this subpart or in connection with an application approved under section 3 of the BHC Act (12 U.S.C. 1842; § 225.11 of subpart B of this part) or section 18(c) of the Federal Deposit Insurance Act (Bank Merger Act, 12 U.S.C. 1828(c));

(3) *Acquisitions subject to approval under BHC Act or Bank Merger Act.* Any acquisition of voting securities subject to approval under section 3 of the BHC Act (12 U.S.C. 1842; § 225.11 of subpart B of this part), or section 18(c) of the Federal Deposit Insurance Act (Bank Merger Act, 12 U.S.C. 1828(c)).

(4) *Transactions exempt under BHC Act.* Any transaction described in sections 2(a)(5), 3(a)(A), or 3(a)(B) of the BHC Act (12 U.S.C. 1841(a)(5), 1842(a)(A), and 1842(a)(B)), by a person described in those provisions;

(5) *Proxy solicitation.* The acquisition of the power to vote securities of a state member bank or bank holding company through receipt of a revocable proxy in connection with a proxy solicitation for the purposes of conducting business at a regular or special meeting of the institution, if the proxy terminates within a reasonable period after the meeting;

(6) *Stock dividends.* The receipt of voting securities of a state member bank or bank holding company through a stock dividend or stock split if the proportional interest of the recipient in the institution remains substantially the same; and

(7) *Acquisition of foreign banking organization.* The acquisition of voting securities of a qualifying foreign banking organization. (This exemption does not extend to the reports and information required under paragraphs 9, 10, and 12 of the Bank Control Act (12 U.S.C. 1817(j) (9), (10), and (12) and § 225.44 of this subpart.)

(b) *Prior notice exemption.* (1) The following acquisitions of voting securities of a state member bank or bank holding company, which would otherwise require prior notice under this subpart, are not subject to the prior notice requirements if the acquiring person notifies the appropriate Reserve Bank within 90 calendar days after the acquisition and provides any relevant information requested by the Reserve Bank:

(i) The acquisition of voting securities through inheritance;

(ii) The acquisition of voting securities as a *bona fide* gift; and

(iii) The acquisition of voting securities in satisfaction of a debt previously contracted (DPC) in good faith.

[1] If two or more persons, not acting in concert, each propose to acquire simultaneously equal percentages of 10 percent or more of a class of voting securities of the state member bank or bank holding company, each such person must file prior notice to the Board.

(2) The following acquisitions of voting securities of a state member bank or bank holding company which would otherwise require prior notice under this subpart are not subject to the prior notice requirements if the acquiring person does not reasonably have advance knowledge of the transaction, and provides the written notice required under § 225.43 to the appropriate Reserve Bank within 90 calendar days after the transaction occurs:

(i) The acquisition of voting securities resulting from a redemption of voting securities by the issuing bank or bank holding company; and

(ii) the acquisition of voting securities as a result of actions (including the sale of securities) by any third party that is not within the control of the acquiror.

(3) Nothing in paragraphs (b)(1) or (b)(2) of this section limits the authority of the Board to disapprove a notice pursuant to § 225.43(h) of this subpart.

§ 225.43 Procedures for filing, processing, publishing, and acting on notices.

(a) *Filing notice.* (1) A notice required under this subpart shall be filed with the appropriate Reserve Bank and shall contain all the information required by paragraph 6 of the Bank Control Act (12 U.S.C. 1817(j)(6)), or prescribed in the designated Board form.

(2) The Board may waive any of the informational requirements of the notice if the Board determines that it is in the public interest.

(3) A notificant must notify the appropriate Reserve Bank or the Board immediately of any material changes in a notice submitted to the Reserve Bank, including changes in financial or other conditions.

(4) When the acquiring person is an individual, or group of individuals acting in concert, the requirement to provide personal financial data may be satisfied by a current statement of assets and liabilities and an income summary, as required in the designated Board form, together with a statement of any material changes since the date of the statement or summary. The Reserve Bank or the Board, nevertheless, may request additional information if appropriate.

(b) *Acceptance of notice.* The 60-day notice period specified in § 225.41 of this subpart shall commence on the date of receipt of a complete notice. The Reserve Bank shall notify the person or persons submitting a notice under this subpart in writing of the date the notice is or was complete and thereby accepted for processing. The Reserve Bank or the Board may request additional relevant information at any time after the date of acceptance.

(c) *Publication*—(1) *Newspaper announcement.* Any person(s) filing a notice under this subpart must publish, in a form prescribed by the Board, an announcement soliciting public comment on the proposed acquisition. The announcement shall be published in a newspaper of general circulation in the community in which the head office of the state member bank to be acquired is located or, in the case of a proposed acquisition of a bank holding company, in the community in which its head office is located and in the community in which the head office of each of its subsidiary banks is located. The announcement must be published no earlier than 30 calendar days prior to the filing of the notice with the appropriate Reserve Bank and no later than 10 calendar days after the filing date, and the publisher's affidavit of a publication must be provided to the appropriate Reserve Bank.

(2) *Contents of newspaper announcement.* The newspaper announcement shall state:

(i) The name of each person identified in the notice as a proposed acquiror of the bank or bank holding company;

(ii) The name of the bank or bank holding company to be acquired, including, in the case of a bank holding company, the name of each of its subsidiary banks; and

(iii) A statement that interested persons may submit comments on the notice to the Board or the appropriate Reserve Bank for a period of 20 days or such shorter period as may be provided pursuant to paragraph (c)(5) of this section.

(3) Federal Register announcement. The Board will, upon filing of a notice under this subpart, publish announcement in the Federal Register of receipt of the notice. The Federal Register announcement will contain the information required under paragraphs (c)(2)(i) and (c)(2)(ii) of this section and a statement that interested persons may submit comments on the proposed acquisition for a period of 15 calendar days or such shorter period as may be provided pursuant to paragraph (c)(5) of this section. The Board may waive publication in the Federal Register if the Board determines that such action is appropriate.

(4) *Delay of publication.* The Board may permit delay in the publication required under paragraphs (c)(1) and (c)(3) of this section if the Board determines, for good cause shown, that it is in the public interest to grant such a delay. Requests for delay of publication may be submitted to the appropriate Reserve Bank.

(5) *Shortening or waiving notice.* The Board may shorten or waive the public comment requirements or this paragraph, waive the newspaper publication requirements of this paragraph, or act on a notice before the expiration of a public comment period, if it determines in writing either that an emergency exists or that disclosure of the notice, solicitation of public comment, or delay until expiration of the public comment period would seriously threaten the safety or soundness of the bank or bank holding company to be acquired.

(6) *Consideration of public comments.* In acting upon a notice filed under this subpart, the Board shall consider all public comments received in writing within the period specified in the newspaper or Federal Register announcement, whichever is later. At the Board's option, comments received after this period may, but need not, be considered.

(7) *Standing.* No person (other than the acquiring person) who submits comments or information on a notice filed under this subpart shall thereby become a party to the proceeding or acquire any standing or right to participate in the Board's consideration of the notice or to appeal or otherwise contest the notice or the Board's action regarding the notice.

(d) *Time period for Board action*—(1) *Consummation of acquisition.* (i) The notificant(s) may consummate the proposed acquisition 60 days after submission to the Reserve Bank of a complete notice under paragraph (a) of this section, unless within that period the Board disapproves the proposed acquisition or extends the 60-day period as provided under paragraph (d)(2) of this section.

(ii) The notificant(s) may consummate the proposed transaction before the expiration of the 60-day period if the Board notifies the notificant(s) in writing of the Board's intention not to disapprove the acquisition.

(2) *Extensions of time period.*

(i) The Board may extend the 60-day period in paragraph (d)(1) of this section for an additional 30 days by notifying the acquiring person(s).

(ii) The Board may further extend the period during which it may disapprove a notice for two additional periods of not more than 45 days each if the Board determines that:

(A) Any acquiring person has not furnished all the information required under paragraph (a) of this section;

(B) Any material information submitted is substantially inaccurate;

(C) The Board is unable to complete the investigation of an acquiring person

because of inadequate cooperation or delay by that person; or

(D) Additional time is needed to investigate and determine that no acquiring person has a record of failing to comply with the requirements of the Bank Secrecy Act, subchapter II of chapter 53 of Title 31, United States Code.

(iii) If the Board extends the time period under this paragraph, it shall notify the acquiring person(s) of the reasons therefore and shall include a statement of the information, if any, deemed incomplete or inaccurate.

(e) *Advice to bank supervisory agencies.* (1) Upon accepting a notice relating to acquisition of securities of a state member bank, the Reserve Bank shall send a copy of the notice to the appropriate state bank supervisor, which shall have 30 calendar days from the date the notice is sent in which to submit its views and recommendations to the Board. The Reserve Bank also shall send a copy of any notice to the Comptroller of the Currency, the Federal Deposit Insurance Corporation, and the Office of Thrift Supervision.

(2) If the Board finds that it must act immediately in order to prevent the probable failure of the bank or bank holding company involved, the Board may dispense with or modify the requirements for notice to the state supervisor.

(f) *Investigation and report.* (1) After receiving a notice under this subpart, the Board or the appropriate Reserve Bank shall conduct an investigation of the competence, experience, integrity, and financial ability of each person by and for whom an acquisition is to be made. The Board shall also make an independent determination of the accuracy and completeness of any information required to be contained in a notice under paragraph (a) of this section. In investigating any notice accepted under this subpart, the Board or Reserve Bank may solicit information or views from any person, including any bank or bank holding company involved in the notice, and any appropriate state, federal, or foreign governmental authority.

(2) The Board or the appropriate Reserve Bank shall prepare a written report of its investigation, which shall contain, at a minimum, a summary of the results of the investigation.

(g) *Factors considered in acting on notices.* In reviewing a notice filed under this subpart, the Board shall consider the information in the record, the views and recommendations of the appropriate bank supervisor, and any other relevant information obtained during any investigation of the notice.

(h) *Disapproval and hearing.*—(1) *Disapproval of notice.* The Board may disapprove an acquisition if it finds adverse effects with respect to any of the factors set forth in paragraph 7 of the Bank Control Act (12 U.S.C. 1817(j)(7)) (*i.e.*, competitive, financial, managerial, banking or incompleteness of information).

(2) *Disapproval notification.* Within three days after its decision to issue a notice of intent to disapprove any proposed acquisition, the Board shall notify the acquiring person in writing of the reasons for the action.

(3) *Hearing.* Within 10 calendar days of receipt of the notice of the Board's intent to disapprove, the acquiring person may submit a written request for a hearing. Any hearing conducted under this paragraph shall be in accordance with the Rules of Practice for Formal Hearings (12 CFR part 263). At the conclusion of the hearing, the Board shall, by order, approve or disapprove the proposed acquisition on the basis of the record of the hearing. If the acquiring person does not request a hearing, the notice of intent to disapprove becomes final and unappealable.

§ 225.44 Reporting of stock loans.

(a) *Requirements.* (1) Any financial institution and any affiliate of a financial institution that has credit outstanding to any person or group of persons, in the aggregate, which is secured, directly or indirectly, by 25 percent or more of any class of voting securities of a state member bank must file a consolidated report with the appropriate Reserve Bank for the state member bank.

(2) The financial institution also must file a copy of the report with its appropriate Federal banking agency.

(3) Any shares of the state member bank held by the financial institution or any of its affiliates as principal must be included in the calculation of the number of shares in which the financial institution or its affiliates has a security interest for purposes of paragraph (a) of this section.

(b) *Definitions.* For purposes of paragraph (a) of this section:

(1) *Financial institution* includes any insured depository institution (as defined in section 3(c)(2) of the Federal Deposit Insurance Act (12 U.S.C. 1813(c)(2)) and any foreign bank that is subject to the provisions of the BHC Act pursuant to section 8 of the International Banking Act (12 U.S.C. 3106).

(2) *Credit outstanding* includes any loan or extension of credit; the issuance of a guarantee, acceptance, or letter of credit, including an endorsement or standby letter of credit; and any other type of transaction that extends credit or financing to the person or group of persons.

(3) *Group of persons* includes any number of persons that the financial institution has reason to believe:

(i) Are acting together, in concert, or with one another to acquire or control shares of the same insured depository institution, including an acquisition of shares of the same depository institution at approximately the same time under substantially the same terms; or

(ii) Have made, or propose to make, a joint filing under section 13 or 14 of the Securities Exchange Act of 1934 (15 U.S.C. 78m or 78n), and the rules promulgated thereunder by the Securities and Exchange Commission regarding ownership of the shares of the same insured depository institution.

(c) *Exceptions.* Compliance with paragraph (a) of this section is not required if:

(1) The person or group of persons referred to in that paragraph has disclosed the amount borrowed and the security interest therein to the Board or appropriate Reserve Bank in connection with a notice filed under § 225.41 of this subpart or another application filed with the Board or Reserve Bank as a substitute for a notice under § 225.41 of this subpart, including an application filed under section 3 of the BHC Act (12 U.S.C. 1842) or section 18(c) of the Federal Deposit Insurance Act (Bank Merger Act, 12 U.S.C. 1828(c)), or an application for membership in the Federal Reserve System; or

(2) The transaction involves a person or group of persons that has been the owner or owners of record of the stock for a period of one year or more; or, if the transaction involves stock issued by a newly chartered bank, before the bank is opened for business.

(d) *Report requirements.* (1) The consolidated report must indicate the number and percentage of shares securing each applicable extension of credit, the identity of the borrower, and the number of shares held as principal by the financial institution and any affiliate of the financial institution.

(2) Financial institutions must file the consolidated report in writing within 30 days of the date on which the financial institution or any affiliate first believes that the security for any outstanding credit consists of 25 percent or more of any class of voting securities of a state member bank.

(e) *Other reporting requirements.* A state member bank that is required to report to another Federal banking agency credit outstanding that is

secured by the shares of an insured depository institution also must file a copy of the report with the appropriate Reserve Bank.

6. Subpart G is amended by revising the heading to read as follows:

Subpart G—Appraisal Standards for Federally Related Transactions

7. Subpart H is amended by revising §§ 225.71 through 225.73 to read as follows:

Subpart H—Notice of Addition or Change of Directors and Senior Executive Officers

§ 225.71 Definitions.

(a) *Senior executive officer* means a person who holds the title or, without regard to title, salary, or compensation, performs the function of one or more of the following positions: president, chief executive officer, chief operating officer, chief financial officer, chief lending officer, or chief investment officer. *Senior executive officer* also includes any other person identified by the Board or Reserve Bank, whether or not hired as an employee, with significant influence over major policymaking decisions of the state member bank or bank holding company.

(b) *Director* means a person who serves on the board of directors of a state member bank or bank holding company, except that this term does not include an advisory director who:

(1) Is not elected by the shareholders of the state member bank or bank holding company;

(2) Is not authorized to vote on any matters before the board of directors;

(3) Solely provides general policy advice to the board of directors and any committee thereof; and

(4) Has not been identified by the Board or Reserve Bank as a person who performs the functions of a director for purposes of this subpart.

(c) *Troubled condition* for a state member bank or bank holding company means an institution that:

(1) Has a composite rating, as determined in its most recent report of examination or inspection, of 4 or 5 under the commercial bank Uniform Interagency Bank Rating System or under the Federal Reserve Bank Holding Company Rating System;

(2) Is subject to a cease-and-desist order or formal written agreement that requires action to improve the financial condition of the institution, unless otherwise informed in writing by the Board or Reserve Bank; or

(3) Is informed in writing by the Board or Reserve Bank that it is in troubled condition for purposes of the requirements of this subpart on the basis of the institution's most recent report of condition or report of examination or inspection, or other information available to the Board or Reserve Bank.

§ 225.72 Director and officer appointments; prior notice requirement.

(a) *Prior notice by institution.* (1) A state member bank or bank holding company shall give the Board 30 days' written notice, as specified in § 225.73, before adding or replacing any member of its board of directors, employing any person as a senior executive officer of the state member bank or bank holding company, or changing the responsibilities of any senior executive officer so that the person would assume a different senior executive officer position, if:

(i) The state member bank has operated under its charter for less than two years;

(ii) The state member bank or bank holding company has undergone a change in control within the preceding two years that required a notice to be filed pursuant to the Change in Bank Control Act or subpart E of this part;

(iii) The bank holding company became a registered bank holding company within the preceding two years, unless:

(A) The bank holding company is owned or controlled by a registered bank holding company; or

(B) The bank holding company was formed in a reorganization in which substantially all shareholders of the bank holding company were shareholders of its subsidiary bank prior to the bank holding company's formation; or

(iv) The state member bank or bank holding company is not in compliance with all minimum capital requirements applicable to the institution as determined on the basis of the institution's most recent report of condition or report of examination or inspection, or is otherwise in troubled condition.

(2) A state member bank will be considered to have operated under its charter for more than two years for purposes of § 225.72(a)(1)(i) if:

(i) In a charter conversion, the predecessor insured depository institution operated under its charter for at least two years; or

(ii) The state member bank was chartered solely to facilitate the acquisition of another insured depository institution that operated under its charter for at least two years.

(b) *Prior notice by an individual.* The prior notice required by paragraph (a) of this section may be provided by an individual seeking election to the board of directors of a state member bank or bank holding company who has not been proposed by management.

§ 225.73 Procedures for filing, processing, and acting on notices; standards for disapproval; waiver of notice.

(a) *Filing notice*—(1) *Content.* The notice required in § 225.72 shall be filed with the appropriate Reserve Bank and shall contain:

(i) The information required by paragraph 6(A) of the Change in Bank Control Act (12 U.S.C. 1817(j)(6)(A)) as may be prescribed in the designated Board form;

(ii) Additional information consistent with the Federal Financial Institutions Examination Council's Joint Statement of Guidelines on Conducting Background Checks and Change in Control Investigations as set forth in the designated Board form; and

(iii) Such other information as may be required by the Board or Reserve Bank.

(2) *Modification.* The Reserve Bank may modify or accept other information in place of the requirements of § 225.73(a)(1) for a notice filed under this subpart.

(3) *Acceptance of notice.* The 30-day notice period specified in § 225.72 shall begin on the date all information required to be submitted by the notificant pursuant to § 225.73(a)(1) is received by the appropriate Reserve Bank. The Reserve Bank shall notify the state member bank or bank holding company or individual submitting the notice of the date on which all required information is received and the notice is accepted for processing, and of the date on which the 30-day notice period will expire.

(b) *Commencement of service*—(1) *At expiration of period.* A proposed director or senior executive officer may begin service after the end of the 30-day period which begins on the day that a complete notice under paragraph (a) of this section has been accepted by the Reserve Bank unless the Board or Reserve Bank issues a notice of disapproval of the proposed addition or employment before the end of the 30-day period.

(2) *Prior to expiration of period.* A proposed director or senior executive officer may begin service before the expiration of the 30-day period if the Board or the Reserve Bank notifies in writing the state member bank or bank holding company or individual submitting the notice of the Board's or Reserve Bank's intention not to disapprove the addition or employment.

(c) *Notice of disapproval.* The Board or Reserve Bank shall disapprove a

notice under § 225.72 if the Board or Reserve Bank finds that the competence, experience, character, or integrity of the individual with respect to whom the notice is submitted indicates that it would not be in the best interests of the depositors of the state member bank or in the best interests of the public to permit the individual to be employed by, or associated with, the state member bank or bank holding company. The notice of disapproval shall contain a statement of the basis for disapproval and shall be sent to the state member bank or bank holding company and the disapproved individual.

(d) *Appeal of a notice of disapproval.* (1) A disapproved individual or a state member bank or bank holding company that has submitted a notice that is disapproved under this section may appeal the disapproval to the Board within 15 days of the effective date of the notice of disapproval. An appeal shall be in writing and explain the reasons for the appeal and include all facts, documents, and arguments that the appealing party wishes to be considered in the appeal, and state whether the appealing party is requesting an informal hearing.

(2) Written notice of the final decision of the Board shall be sent to the appealing party within 60 days of the receipt of an appeal, unless the appealing party's request for an informal hearing is granted.

(3) The disapproved individual may not serve as a director or senior executive officer of the state member bank or bank holding company while the appeal is pending.

(e) *Informal hearing.* (1) An individual, state member bank or bank holding company whose notice under this section has been disapproved may request an informal hearing on the notice. A request for an informal hearing shall be in writing and shall be submitted within 15 days of a notice of disapproval. The Board may, in its sole discretion, order an informal hearing if the Board finds that oral argument is appropriate or necessary to resolve disputes regarding material issues of fact.

(2) An informal hearing shall be held within 30 days of a request, if granted, unless the requesting party agrees to a later date.

(3) Written notice of the final decision of the Board shall be given to the individual and the state member bank or bank holding company within 60 days of the conclusion of any informal hearing ordered by the Board unless the requesting party agrees to a later date.

(f) *Waiver of notice*—(1) *Waiver requests.* The Board or Reserve Bank may permit an individual to serve as a senior executive officer or director before the notice required under this subpart is provided, if the Board or Reserve Bank finds that:

(i) Delay would threaten the safety or soundness of the state member bank or bank holding company or any of its subsidiary banks;

(ii) Delay would not be in the public interest; or

(iii) Other extraordinary circumstances exist that justify waiver of prior notice.

(2) *Automatic waiver.* An individual who is not proposed by the management of a state member bank or bank holding company and who is elected as a new member of the board of directors at a meeting of the state member bank or bank holding company may serve as a director and may comply with the notice requirements of § 225.72(a) by providing to the appropriate Reserve Bank all the information required in § 225.73(a) within two (2) business days after the individual's election.

(3) *Effect on disapproval authority.* Any waiver granted under this section shall not affect the authority of the Board or Reserve Bank to issue a notice of disapproval within 30 days after such waiver.

8. Section 225.125 is amended by revising paragraphs (f) and (g) to read as follows:

§ 225.125 Investment adviser activities.

* * * * *

(f) In the Board's opinion, the Glass-Steagall Act provisions, as interpreted by the U.S. Supreme Court, forbid a bank holding company to sponsor, organize or control a mutual fund. However, the Board does not believe that such restrictions apply to closed-end investment companies as long as such companies are not primarily or frequently engaged in the issuance, sale and distribution of securities. A bank holding company should not act as investment adviser to an investment company which has a name that is similar to the name of the holding company or any of its subsidiary banks unless the prospectus of the investment company contains the disclosures required in paragraph (h) of this section. In no case should a bank holding company act as investment adviser to an investment company which has either a name that is the same as the name of the holding company or any of its subsidiary banks, or a name that contains the word ''bank''.

(g) In view of the potential conflicts of interests that may exist, a bank holding company and its bank and nonbank subsidiaries should not purchase in their sole discretion in a fiduciary capacity (including as managing agent) securities of any investment company for which the bank holding company acts as investment adviser unless the purchase is specifically authorized by the terms of the instrument creating the fiduciary relationship, by court order, or by the law of the jurisdiction under which the trust is administered.

* * * * *

9. Appendix C is revised to read as follows:

Appendix C to Part 225—Small Bank Holding Company Policy Statement

Policy Statement on Assessment of Financial Factors

In acting on applications filed under the Bank Holding Company Act, the Board has adopted, and continues to follow, the principle that bank holding companies should serve as a source of strength for their subsidiary banks. When bank holding companies incur debt and rely upon the earnings of their subsidiary banks as the means of repaying such debt, a question arises as to the probable effect upon the financial condition of the company and its subsidiary bank or banks.

The Board believes that a high level of debt at the parent holding company level impairs the ability of a bank holding company to provide financial assistance to its subsidiary bank(s) and in some cases the servicing requirements on such debt may be a significant drain on the resources of the bank(s). For these reasons the Board has not favored the use of acquisition debt in the formation of bank holding companies or in the acquisition of additional banks. Nevertheless, the Board has recognized that the transfer of ownership of small banks often requires the use of acquisition debt. The Board therefore has permitted the formation and expansion of small-bank holding companies with debt levels higher than would be permitted for larger holding companies. Approval of these applications has been given on the condition that the small-bank holding companies demonstrate the ability to service the acquisition debt without straining the capital of their subsidiary bank(s) and, further, that such companies restore their ability to serve as a source of strength for their subsidiary bank(s) within a relatively short period of time.

In the interest of furthering its policy of facilitating the transfer of ownership in banks without diluting bank safety and soundness, the Board has, as described below, adopted certain revisions to its procedures and standards for the formation and expansion of small bank holding companies.

A. *Size criterion and grandfathering:* This policy applies only to bank holding companies with pro forma consolidated assets of less than $150 million that: (i) Are *not* engaged in nonbank activity involving

significant leverage;[1] and (ii) do *not* have a significant amount of outstanding debt that is held by the general public. Small-bank holding companies formed before the effective date of this policy may switch to a plan that adheres to the intent of this policy provided they comply with the requirements set forth under paragraphs C., D.2, D.3, and D.4 below.

B. *The two categories of small bank holding company proposals:*

Category I (low leverage) proposal: A proposal in which the parent bank holding company has a pro-forma debt-equity ratio of 1.0:1 or less and meets all applicable requirements of this policy statement;

Category II (highly leveraged or other) proposal: A proposal in which the parent bank holding company has a pro-forma debt-equity ratio of greater than 1.0:1, or any proposal by a small bank holding company under Section 3 of the Bank Holding Company Act that does not meet one of the applicable requirements of this policy statement.

C. *Examination ratings and bank capitalization:* Generally, the Board expects that an applicant's existing and proposed subsidiary bank(s) will have satisfactory examination ratings and be well managed, and that all present and proposed bank subsidiaries will be designated well-capitalized. Although the Board recognizes that there may be instances in which proposals merit favorable consideration despite the failure to meet these and the other requirements of this policy statement, such proposals will be subject to more intense evaluation and will not be subject to the expedited procedures set forth in Regulation Y that apply to Category I (low leverage) proposals. Proposals involving *de novo* banks or those that otherwise have not been examined would be processed as Category II (highly leveraged) proposals.

D. *Other financial considerations:* In evaluating applications filed pursuant to section 3 of the Bank Holding Company Act, as amended, when an applicant intends to incur debt to finance the acquisition of a small bank or banks, the Board will continue to take into account a full range of financial and other information about the applicant, and its current and proposed subsidiary bank(s), including the recent trend and stability of earnings, past and prospective growth, asset quality, the ability to meet debt servicing requirements without placing an undue strain on the resources of the bank(s), and the record and competency of management. In addition, the Board will require applicants to meet the minimum requirements set forth below. As a general rule, failure to meet any of these requirements will result in denial of the application; however, the Board reserves the right to make exceptions if the circumstances warrant.

1. Minimum down payment: The amount of acquisition debt should not exceed 75 percent of the purchase price of the bank(s) to be acquired. When the owner(s) of the holding company incur debt to finance the purchase of the bank(s), such debt will be considered acquisition debt even though it does not represent an obligation of the bank holding company, unless the owner(s) can demonstrate that such debt can be serviced without reliance on the resources of the bank(s) or bank holding company.

2. Capital adequacy: Each subsidiary bank of a small bank holding company subject to this policy statement is expected to maintain a *well-capitalized* designation.

3. Reduction in parent company leverage: Small-bank holding companies subject to this policy statement are to reduce their parent company debt to equity ratios consistent with the statutory requirement that all debt be retired within 25 years of being incurred. The Board also generally expects that small bank holding companies reach a debt to equity level of 30 percent or less within 12 years of the incurrence of the debt. The holding company must also safely meet debt servicing and other requirements imposed by its creditors.[2]

4. Dividend restrictions: A small bank holding company with a Category II (highly leveraged) proposal as described above is not expected to pay corporate dividends on common stock until such time as it reduces its debt to equity ratio to 1.0:1 or less and otherwise qualifies as a Category I (low leverage) proposal.[3]

E. *Subsequent acquisitions:* Small bank holding companies may make acquisitions of additional banks after their formation if they continue to meet the requirements of this policy statement and other relevant statutory factors. It is expected that expanding small bank holding companies will be in satisfactory financial condition and well managed. Small bank holding companies whose expansion proposals otherwise qualify as Category I (low leverage) proposals must also be rated BOPEC composite 1–S or 2–S as of their most recent inspection in order to qualify for the expedited processing procedures. Proposals from unrated small bank holding companies will be subject to a more intense review and, therefore, will not be eligible for the expedited procedures.

By order of the Board of Governors of the Federal Reserve System, August 28, 1996.

William W. Wiles,

Secretary of the Board.

[FR Doc. 96–22402 Filed 9–5–96; 8:45 am]

BILLING CODE 6210–01–P

[1] A bank holding company that is engaged in significant off balance sheet activities would generally be deemed to be engaged in activities that involve significant leverage.

[2] The term *debt*, as used in the ratio of debt to equity, means any borrowed funds (exclusive of short-term borrowings that arise out of current transactions, the proceeds of which are used for current transactions), and any securities issued by, or obligations of, the holding company that are the functional equivalent of borrowed funds.

The term *equity*, as used in the ratio of debt to equity, means the total stockholders' equity of the bank holding company adjusted to reflect the periodic amortization of ''goodwill'' (defined as the excess of cost of any acquired company over the sum of the amounts assigned to identifiable assets acquired, less liabilities assumed) in accordance with generally accepted accounting principles. In determining the total amount of stockholders' equity, the bank holding company should account for its investments in the common stock of subsidiaries by the equity method of accounting.

Ordinarily the Board does not view redeemable preferred stock as a substitute for common stock in a small-bank holding company. Nevertheless, to a limited degree and under certain circumstances, the Board will consider redeemable preferred stock as equity in the capital accounts of the holding company if the following conditions are met: (1) The preferred stock is redeemable only at the option of the issuer and (2) the debt to equity ratio of the holding company would be at or remain below 30 percent following the redemption or retirement of any preferred stock. Preferred stock that is convertible into common stock of the holding company may be treated as equity.

[3] Dividends may be paid by small bank holding companies with debt to equity at or below 1.0:1 if the dividends are reasonable in amount, do not adversely affect the ability of the bank holding company to service its debt in an orderly manner, and do not adversely affect the ability of the subsidiary bank(s) to maintain well-capitalized designations. It is expected that dividends will be eliminated if the holding company is not meeting the projections, made at the time the application was filed, regarding the ability of the holding company to reduce the debt to equity ratio to 30 percent within 12 years of consummation of the proposal.

federal register

Friday
September 6, 1996

Part III

Federal Communications Commission

47 CFR Parts 51 and 52

Telecommunications Act of 1996: Implementation of Local Competition Provisions; Final Rule

FEDERAL COMMUNICATIONS COMMISSION

47 CFR Parts 51 and 52

[CC Docket No. 96–98, 95–185, 92–237, FCC 96–333]

Implementation of the Local Competition Provisions of the Telecommunications Act of 1996

AGENCY: Federal Communications Commission.

ACTION: Final rule.

SUMMARY: In enacting the Telecommunications Act of 1996 (1996 Act) Congress sought to establish a pro-competitive, deregulatory national policy framework for the telecommunications industry. In adding a new Section 251 to the Communications Act of 1934, Congress set forth a blueprint for ending monopolies in local telecommunications markets. In this Second Report and Order the Commission adopts rules implementing certain provisions of Section 251. Specifically, this order adopts rules requiring local exchange carriers to provide dialing parity and nondiscriminatory access to their competitors; and requiring incumbent local exchange carriers to give public notice of certain network changes. In addition, this order adopts rules regarding number administration and addresses various petitions concerning numbering issues. These actions will serve to implement the statute, eliminate operational barriers to competition, and provide for effective use of numbering resources.

EFFECTIVE DATE: October 7, 1996, except that the collection of information subject to approval by the Office of Management and Budget (OMB) that are contained in sections 51.211(c), 51.213, 51.217, 51.305(g), 51.307(e), 51.325, 51.327, 51.329, 51.331, 51.333, 51.335 and 52.19(b) which are effective November 15, 1996.

FOR FURTHER INFORMATION CONTACT: For information concerning Dialing Parity, Nondiscriminatory Access and Network Information Disclosure, contact Lisa Boehley, (202) 418–2320, Network Services Division, Common Carrier Bureau. For information concerning Numbering Administration contact Marian Gordon, (202) 418–2320, Network Services Division, Common Carrier Bureau.

SUPPLEMENTARY INFORMATION: This Second Report and Order contains new or modified information collections subject to the Paperwork Reduction Act of 1995 (PRA). It has been submitted to the Office of Management and Budget (OMB) for review under the PRA. OMB, the general public, and other federal agencies are invited to comment on the proposed or modified information collections contained in this proceeding. This is a synopsis of the Commission's Second Report and Order and Memorandum Opinion and Order, (FCC 96–333) adopted on August 8, 1996 and released on August 8, 1996. The full text of this Order is available for inspection and copying during normal business hours in the FCC Reference Center (Room 239), 1919 M Street, N.W., Washington, D.C. The complete text also may be purchased from the Commission's copy contractor, International Transcription Service, Inc., (202) 857–3800, 2100 M Street N.W., Suite 140, Washington, D.C. 20037.

PAPERWORK REDUCTION ACT: This Second Report and Order contains either a new or modified information collection. The Commission, as part of its continuing effort to reduce paperwork burdens, invites the general public and the Office of Management and Budget (OMB) to comment on the information collections contained in this order, as required by the Paperwork Reduction Act of 1995, Public Law No. 104–13. OMB notification of action is due September 6, 1996. Comments should address: (a) whether the new or modified collection of information is necessary for the proper performance of the functions of the Commission, including whether the information shall have practical utility; (b) the accuracy of the Commission's burden estimates; (c) ways to enhance the quality, utility, and clarity of the information collected; and (d) ways to minimize the burden of the collection of information on the respondents including the use of automated collection techniques or other forms of information technology.

OMB Approval Number: None.

Title: Implementation of the Local Competition Provisions of the Telecommunications Act of 1996—Second Report and Order and Memorandum Opinion and Order, CC Dockets No. 96–98 and 95–185.

Form No.: N/A.

Type of Review: New Collections.

Respondents: Business or other for-profit, including small businesses, and state and local governments.

Section/title	No. of respondents	Est. time per response	Total annual burden
Dialing parity implementation plans	1,350	100	135,000
Justification for noncompliance	20	9	180
Sharing of directory listings	500	36	18,000
Provision of technical information	500	24	12,000
Public notice of network changes	500	72	36,000
Burden of proof	75	8	600
Submission of area code relief plans	30	40	1,200

Total Annual Burden: 202,980.

Estimated Costs Per Respondent: $0.

Needs and Uses: The new or modified information collections in this Second Report and Order will be used to ensure that affected telecommunications carriers fulfill their obligations under the Communications Act, as amended.

Synopsis of Second Report and Order

Adopted: August 8, 1996.

Released: August 8, 1996.

Table of Contents

Section	Paragraph
I. Introduction and Overview	1
A. Actions to Implement Section 251(b)(3)	4
1. Dialing Parity	4
2. Nondiscriminatory Access	12
B. Actions to Implement Section 251(c)(5)	16

Table of Contents—Continued

Section	Paragraph
C. Actions Taken to Implement Section 251(e)	18
II. Dialing Parity Requirements	22
A. In General	22
1. The Need for Minimum Nationwide Dialing Parity Standards	23
a. Background and Comments	23

Table of Contents—Continued

Section	Paragraph
b. Discussion	25
2. Scope of the Dialing Parity Requirements	26
a. Background	26
b. Comments	27
c. Discussion	29
B. Implementation of the Toll Dialing Parity Requirements	31
1. Presubscription Method of Achieving Toll Dialing Parity	31
a. Background	31
b. Comments	33
c. Discussion	34
2. Categories of Domestic, Long Distance Traffic Subject to Presubscription	35
a. Background	35
b. Comments	36
c. Discussion	37
3. Separate Presubscription for International Calls	43
a. Background and Comments	43
b. Discussion	45
4. Full 2-PIC Presubscription Method	46
a. Background	46
b. Comments	48
c. Discussion	49
5. Deployment of Presubscription Software in Each End Office	51
a. Background	51
b. Comments	52
c. Discussion	54
C. Implementation Schedule for Toll Dialing Parity	55
1. Background and Comments	55
2. Discussion	59
D. Implementation of the Local Dialing Parity Requirements	64
1. In General	64
a. Background	64
b. Comments	65
c. Discussion	67
2. Local Dialing Parity Methodologies	69
a. Background and Comments	69
b. Discussion	71
3. Non-Uniform Local Calling Areas	72
a. Background	72
b. Comments	73
c. Discussion	75
E. Consumer Notification and Carrier Selection Procedures	76
a. Background	76
b. Comments	77
c. Discussion	80
F. Cost Recovery	82
a. Background	82
b. Comments	83
c. Discussion	92

Table of Contents—Continued

Section	Paragraph
G. Unreasonable Dialing Delays	96
III. Nondiscriminatory Access Provisions	97
A. Definition of the Term ''Nondiscriminatory Access''	97
1. Background	97
2. Comments	98
3. Discussion	101
B. Nondiscriminatory Access to Telephone Numbers	106
1. Definition	106
2. Commission Action to Enforce Access to Telephone Numbers	107
C. Nondiscriminatory Access to Operator Services	108
1. Definition of ''Operator Services''	108
a. Background and Comments	108
b. Discussion	110
2. Definition of ''Nondiscriminatory Access to Operator Services''	112
a. Background	112
b. Comments	113
c. Discussion	114
3. Commission Action to Ensure Nondiscriminatory Access to Operator Services	119
a. Background and Comments	119
b. Discussion	121
4. ''Branding'' Requirements for Operator Services	123
a. Background	123
b. Comments	126
c. Discussion	128
D. Nondiscriminatory Access to Directory Assistance and Directory Listings	130
1. Definition of ''Nondiscriminatory Access to Directory Assistance and Directory Listings''	130
a. Background	130
b. Comments	131
c. Discussion	133
2. Commission Action to Implement Nondiscriminatory Access to Directory Assistance and Directory Listings	138
a. Background and Comments	138
b. Discussion	141
3. Branding of Directory Assistance	146
a. Background and Comments	146
b. Discussion	148
4. Alternative Dialing Arrangements for Directory Assistance	149
a. Background and Comments	149

Table of Contents—Continued

Section	Paragraph
b. Discussion	151
E. Unreasonable Dialing Delay	152
1. Definition and Appropriate Measurement Methods	152
a. Background and Comments	152
b. Discussion	156
2. Specific Technical Standard for Dialing Delay	163
a. Background and Comments	163
b. Discussion	164
IV. Network Disclosure	165
A. Scope of Public Notice	166
1. Definition of ''Information Necessary for Transmission and Routing''	166
a. Background and Comments	166
b. Discussion	171
2. Definition of ''Services''	175
a. Background and Comments	175
b. Discussion	176
3. Definition of ''Interoperability''	177
a. Background and Comments	177
b. Discussion	178
4. Changes that Trigger the Public Notice Requirement	179
a. Background and Comments	179
b. Discussion	182
5. Types of Information to be Disclosed	183
a. Background	183
b. Comments	184
c. Discussion	188
B. How Public Notice Should be Provided	192
1. Dissemination of Public Notice Through Industry Fora and Publications	192
a. Background	192
b. Comments	193
c. Discussion	198
2. When Should Public Notice of Changes Be Provided?	203
a. Background	203
b. Comments	206
c. Discussion	214
C. Relationship with other Public Notice Requirements and Practices	237
1. Relationship of Sections 273(c)(1) and 273(c)(4) with Section 251(c)(5)	237
a. Background	237
b. Comments	238
c. Discussion	240

Table of Contents—Continued

Section	Paragraph
2. Relationship of Sections 251(a) and 251(c)(5) with Section 256	241
a. Background	241
b. Comments	242
c. Discussion	244
D. Enforcement and Safeguards	245
1. Enforcement Mechanisms	245
a. Background and Comments	245
b. Discussion	247
2. Protection of Proprietary Information, Network and National Security	249
a. Background and Comments	249
b. Discussion	254
V. Numbering Administration	261
A. Designation of an Impartial Number Administrator	262
1. Background	262
2. Comments	263
3. Discussion	264
B. Delegation of Numbering Administration Functions	267
1. Delegation of Matters Related to Implementation of New Area Codes	268
a. Background	268
b. Comments	269
c. Discussion	271
2. Area Code Implementation Guidelines	273
a. Background	273
b. Comments	275
c. Discussion	281
3. Texas Public Utility Commission's Area Code Relief Order for Dallas and Houston	294
a. Background	294
b. Petition and Comments	295
c. Discussion	304
4. Delegation of Additional Numbering Administration Functions	309
a. Background	309
b. Comments	311
c. Discussion	315
5. Delegation of Existing Numbering Administration Functions Prior to Transfer	323
a. Background	323
b. Comments	324
c. Discussion	328
C. Cost Recovery for Numbering Administration	336
1. Background	336
2. Comments	337
3. Discussion	342

Table of Contents—Continued

Section	Paragraph
D. Section 271 Competitive Checklist Requirement that the BOCs Provide Non-Discriminatory Access to Numbers for Entry into In-region InterLATA Services	344
1. Background and Comments	344
2. Discussion	345
VI. Final Regulatory Flexibility Analysis	346
A. Need for and Purpose of this Action	347
B. Summary of Issues Raised by the Public Comments in Response to the Initial Regulatory Flexibility Analysis	349
C. Description and Estimate of the Small Entities Subject to the Rules	361
D. Summary of Projected Reporting, Recordkeeping and Other Compliance Requirements	378
E. Report to Congress	398
VII. Ordering Clauses	399

I. Introduction and Overview

1. In February, 1996, Congress passed and the President signed into law, the Telecommunications Act of 1996 (1996 Act).[1] The 1996 Act erects a ''procompetitive, de-regulatory national framework designed to accelerate rapid private sector deployment of advanced telecommunications and information technologies and services to all Americans by opening all telecommunications markets to competition.'' [2] Section 101 of the 1996 Act adds new section 251 to the Communications Act of 1934. Congress intended that the provisions of this new section would help competition grow in the market for exchange and exchange access and related telecommunications services. It directed the Commission to adopt rules that would implement the requirements of this section no later than August 8, 1996.[3] We note, however, that, under section 251(f), certain rural or small local exchange carriers (LECs) are exempt or may seek relief from the rules we adopt herein.[4]

2. We began this rulemaking proceeding on April 19, 1996.[5] The *First Report and Order*, which addressed issues that were raised in this docket, decided that the Commission should establish national rules implementing section 251.[6] The *First Report and Order* interprets and implements, *inter alia*, sections 251 (a), (b)(1), (b)(4), (b)(5), (c)(1), (c)(2), (c)(3), (c)(4), and (c)(6). That order promulgates rules to open the local exchange and exchange access markets to competition by eliminating legal and technical barriers to such competition. This *Second Report and Order and Memorandum Opinion and Order (Order)* promulgates rules to implement the parts of section 251 that relate to the elimination of certain operational barriers to competition. Specifically, this *Order* addresses local exchange carriers' obligations to provide their competitors with dialing parity and nondiscriminatory access to certain services and functionalities;[7] incumbent local exchange carriers' duty to make network information disclosures;[8] and numbering administration.[9] In this *Order* we also deny the Petition for Expedited Declaratory Ruling on the area code relief plan for Dallas and Houston that the Texas Public Utility Commission (Texas Commission) filed with this Commission on May 9, 1996.[10] We also address petitions for clarification or reconsideration in the *Ameritech* and *NANP* proceedings.[11]

3. Dialing parity, nondiscriminatory access, network disclosure, and numbering administration issues are critical issues for the development of local competition. As stated in the *First Report and Order*, incumbent local exchange carriers have little incentive to

[1] Telecommunications Act of 1996, Public Law No. 104–104, 110 Stat. 56 (1996) (1996 Act), to be codified at 47 U.S.C. 151 *et. seq.*

[2] S. Conf. Rep. No. 104–230, 104th Cong., 2d Sess. 1 (1996).

[3] 47 U.S.C. 251(d)(1).

[4] 47 U.S.C. 251(f) (1) and (f)(2). We note that the term ''United States'' means ''the several States and Territories, the District of Columbia, and the possessions of the United States, but does not include the Canal Zone.'' 47 U.S.C. 153(50).

[5] *Implementation of the Local Competition Provisions in the Telecommunications Act of 1996*, CC Docket No. 96–98, Notice of Proposed Rulemaking, FCC 96–182 (released April 19, 1996) (*NPRM*) 61 FR 18311 (April 25, 1996).

[6] *Implementation of the Local Competition Provisions in the Telecommunications Act of 1996, CC Docket No. 96–98, Interconnection between Local Exchange Carriers and Commercial Mobile Radio Service Providers*, CC Docket No. 95–185, First Report and Order, FCC 96–235 (released August 8, 1996) (hereinafter *First Report and Order*) at section II.

[7] 47 U.S.C. 251(b)(3).

[8] 47 U.S.C. 251(c)(5).

[9] 47 U.S.C. 251(e)(1).

[10] *In the Matter of Area Code Relief Plan for Dallas and Houston, Ordered by the Public Utility Commission of Texas*, Petition for Expedited Declaratory Ruling filed May 9, 1996.

[11] *See In the Matter of Proposed 708 Relief Plan and 630 Numbering Plan Area Code by Ameritech—Illinois*, IAD File No. 94–102, Declaratory Ruling and Order, 10 FCC Rcd 4596 (1995) (*Ameritech Order*) 60 FR 19255 (April 17, 1995) and *Administration of the North American Numbering Plan*, CC Docket No. 92–237, Report and Order, 11 FCC Rcd 2588, 2591 (1995) (*NANP Order*) 60 FR 38737 (July 28, 1995).

provide access to potential competitors to their networks. In other words, potential competitors in the local and long distance markets face numerous operational barriers to entry notwithstanding their legal right to enter such markets. The dialing parity, nondiscriminatory access, and network disclosure requirements should remove those barriers to entry. The rules we adopt herein will benefit consumers by making some of the strongest aspects of local exchange carrier incumbency—the local dialing, telephone numbers, operator services, directory assistance, and directory listing—available to all competitors on an equal basis.

A. Actions To Implement Section 251(b)(3)

1. Dialing Parity

4. Section 251(b)(3) of the 1996 Act directs each local exchange carrier (LEC) [12] to provide dialing parity to competing providers of telephone exchange and telephone toll service.[13] This requirement means that customers of these competitors should not have to dial extra digits to have their calls routed over that LEC's network. To implement this statutory requirement, we adopt broad guidelines and minimum federal standards that build upon the experiences and accomplishments of state commissions. Although the 1996 Act requires a LEC to provide dialing parity only to providers of telephone exchange and toll services, section 251(b)(3) does not limit the type of traffic or service for which dialing parity must be afforded to those providers. We conclude, therefore, that section 251(b)(3) requires LECs to provide dialing parity to providers of telephone exchange or toll service with respect to all telecommunications services that require dialing to route a call and encompasses international, interstate, intrastate, local and toll services.

(5) With respect to toll service, we further find that section 251(b)(3) requires, at a minimum, that customers be entitled to choose different presubscribed, or preselected, carriers for both their intraLATA and interLATA toll calls. In states, like Alaska and Hawaii, that have no LATAs,[14] customers must be able to choose different presubscribed carriers for both their intrastate and interstate toll calls. Based on this finding, we adopt a rule requiring all LECs to implement intraLATA and interLATA toll dialing parity, using the ''full 2–PIC'' presubscription method.[15] The toll dialing parity requirement we adopt is defined by LATA boundaries given that the Bell Operating Companies' (BOCs') operations are likely to be shaped by LATA boundary restrictions for a period of unforeseeable duration. Given that implementation of the 1996 Act over time may diminish the significance of LATA boundaries, however, we permit states to redefine the toll dialing parity requirement based on state, rather than LATA, boundaries where a state deems such a requirement to be pro-competitive and otherwise in the public interest.[16]

6. In order to facilitate the orderly implementation of toll dialing parity, we require each LEC, including a BOC, to submit a plan to the state regulatory commission for each state in which it provides telephone exchange service setting forth the LEC's plan for implementing toll dialing parity, including the methods it proposes to enable customers to select alternative providers. In the event that a state elects not to evaluate such a plan sufficiently in advance of the date on which a LEC is required to implement toll dialing parity, we require the LEC to file its plan with the Commission. The Commission will act upon such a plan within 90 days of the date on which it is filed with the Commission.

7. Under the toll dialing parity implementation schedule we adopt, we require each LEC, including a BOC, to implement toll dialing parity no later than February 8, 1999. In addition, we require a LEC, including a BOC, to provide toll dialing parity throughout a state coincident with its provision of in-region, interLATA or in-region, interstate toll services in that state. LECs, other than BOCs, that are either already offering or plan to begin to provide in-region, interLATA or in-region, interstate toll services before August 8, 1997, must implement toll dialing parity by August 8, 1997. We note that smaller LECs, for which this implementation schedule may be unduly burdensome, may petition their state commission for a suspension or modification of the application of this requirement.[17]

8. Those states desiring to impose more stringent presubscription methodologies, e.g., multi-PIC or smart-PIC,[18] will retain the flexibility to impose such additional requirements. We also announce our intention to issue a Further Notice of Proposed Rulemaking addressing the technical feasibility and nationwide availability of a separate presubscription choice for international calling based on the use of multi-PIC or smart-PIC technologies.

9. Pursuant to the local dialing parity requirements of section 251(b)(3), we require a LEC to permit telephone exchange service customers, within a defined local calling area, to dial the same number of digits to make a local telephone call, notwithstanding the identity of the customer's or the called party's local telephone service provider. We decline at this time to prescribe additional guidelines to address the methods that LECs may use to accomplish local dialing parity given our finding that local dialing parity will be achieved upon implementation of the number portability and interconnection requirements of section 251, as well as

[12] The 1996 Act defines the term ''local exchange carrier'' as ''any person that is engaged in the provision of telephone exchange service or exchange access. Such term does not include a person insofar as such person is engaged in the provision of commercial mobile service under section 332(c), except to the extent that the Commission finds that such provider should be included in the definition of such term.'' 47 U.S.C. 153(26). For purposes of the dialing parity and nondiscriminatory access obligations that we impose pursuant to section 251(b)(3), we find that commercial mobile radio service (CMRS) providers are not LECs. See *infra* para. 29.

[13] According to the 1996 Act, the term ''dialing parity'' means ''that a person that is not an affiliate of a local exchange carrier is able to provide telecommunications services in such a manner that customers have the ability to route automatically, without the use of any access code, their telecommunications to the telecommunications services provider of the customer's designation from among 2 or more telecommunications services providers (including such local exchange carrier).'' 47 U.S.C. 153(15).

[14] 47 U.S.C. 153(25). According to the 1996 Act, a LATA is a ''local access and transport area.'' It is a ''contiguous geographic area—

(A) established before the date of enactment of the Telecommunications Act of 1996 by a Bell operating company such that no exchange area includes points within more than 1 metropolitan statistical area, consolidated metropolitan statistical area, or State, except as expressly permitted under the AT&T Consent Decree; or

(B) established or modified by a Bell operating company after such date of enactment and approved by the Commission.''

[15] We note that the abbreviation ''PIC'' in the past has stood for the term ''primary,'' or ''preferred, interexchange carrier.'' While we retain the acronym ''PIC,'' we define the term to include any toll carrier for purposes of the presubscription rules that we adopt in this *Order*. For a discussion of the full 2–PIC presubscription methodology, *see infra* section II.B(4).

[16] To illustrate, if the presubscription requirement were based on LATA boundaries, a customer would be entitled to choose a primary carrier for all intraLATA toll calls and a separate, or the same, primary carrier for all interLATA toll calls. If the presubscription requirement were based on state boundaries, a customer would be entitled to choose a primary carrier for all intrastate toll calls and a separate, or the same, primary carrier for all interstate toll calls.

[17] 47 U.S.C. 251(f)(2).

[18] The multi-PIC or smart-PIC presubscription method would enable subscribers to select multiple carriers for various categories of toll traffic. For a discussion of multi-PIC and smart-PIC presubscription methodologies, *see infra* section II.B(4).

the provisions requiring nondiscriminatory access to telephone numbers found in section 251(b)(3).

10. We also decline to adopt federal consumer education programs or procedures that would inform consumers of the existence of competitive telecommunications providers. Instead, we leave decisions regarding consumer education and carrier selection procedures to the states. We conclude that, in order to ensure that dialing parity is implemented in a pro-competitive manner, national rules are needed for the recovery of dialing parity implementation costs.

11. Section 271 of the 1996 Act requires BOCs to provide intraLATA toll dialing parity throughout a state coincident with the exercise of their authority to offer interLATA services originating within the state.[19] BOC entry into the interLATA market is conditioned upon their offering ''nondiscriminatory access to such services or information as are necessary to allow the requesting carrier to implement local dialing parity in accordance with the requirements of Section 251(b)(3).''[20]

2. Nondiscriminatory Access

12. Section 251(b)(3) also requires all LECs to permit competing providers of telephone exchange service and toll service ''nondiscriminatory access to telephone numbers, operator services, directory assistance and directory listings.''[21] We conclude that ''Nondiscriminatory access,'' as used in section 251(b)(3), encompasses both: (1) Nondiscrimination between and among carriers in rates, terms and conditions of access; and (2) the ability of competing providers to obtain access that is at least equal in quality to that of the providing LEC. This definition of ''nondiscriminatory access'' in section 251(b)(3) recognizes the more general application of that section to all LECs, whereas section 251(c) places more specific duties upon incumbent LECs in terms of nondiscriminatory access. We conclude that the term ''nondiscriminatory access to telephone numbers'' requires all LECs to permit competing providers access to telephone numbers that is identical to the access the LEC provides to itself.

13. We conclude that the term ''operator services,'' for purposes of section 251(b)(3), means any automatic or live assistance to a consumer to arrange for billing or completion, or both, of a telephone call. Such a definition includes busy line verification, emergency assistance, operator-assisted directory assistance, and any other such services used to arrange for the billing and/or completion of telephone calls. We further conclude that any customer of a telephone service provider that provides operator services should be able to obtain these services by dialing ''0'' or ''0-plus the desired telephone number.'' If a dispute arises regarding a competitor's access to operator services, the burden will be upon the providing LEC to demonstrate, with specificity, that it has permitted nondiscriminatory access and that any disparity is not caused by network elements within its control. To the extent that operator services use any information services and adjuncts that are not ''telecommunications services,'' of which resale is required under 251(b)(1), LECs are required to make available such services to competing providers in their entirety as a requirement of nondiscriminatory access under 251(b)(3).[22] Finally, we find that the refusal of a LEC providing nondiscriminatory access to comply with reasonable requests of competing providers to ''brand'' resold operator services as those of the reseller, or to remove its brand, creates a presumption that the LEC is unlawfully restricting access to operator services.

14. We conclude that the requirement in section 251(b)(3) of nondiscriminatory access to directory assistance means that LECs that provide directory assistance must permit access to this service to competing providers that is at least equal in quality to the access that the LEC provides to itself. We impose obligations upon all LECs to satisfy the requirement of nondiscriminatory access to directory listings. If a LEC provides directory assistance, that LEC must permit competing providers to have access to its directory assistance, so that any customer of a competing provider can access any listed number on a nondiscriminatory basis, notwithstanding the identity of the customer's local service provider. Further, we require LECs to share directory listings with competing service providers, in ''readily accessible'' tape or electronic formats, upon request, and in a timely manner. To the extent that all or part of directory assistance services are not ''telecommunications services,'' of which resale is required under 251(b)(1), LECs must make available such services in their entirety as part of their obligation to permit nondiscriminatory access to competing providers.[23] This requirement thus extends to any information services and adjuncts used to provide directory assistance. Finally, as with the branding of resold operator services, we find that the refusal of a LEC providing nondiscriminatory access to directory assistance to ''brand'' resold directory assistance services as those of the reseller, or to remove its brand, creates a presumption that the LEC is unlawfully restricting access to directory assistance.

15. We also conclude that section 251(b)(3)'s requirement of nondiscriminatory access and its prohibition of unreasonable dialing delays applies to both the provision of local and toll dialing parity. We conclude that the dialing delay experienced by customers of a competing provider should not be greater than that experienced by customers of a LEC providing dialing parity or nondiscriminatory access, for identical calls or call types. Finally, we conclude that the statutory obligation to avoid unreasonable dialing delays places a duty on LECs that provide dialing parity, or nondiscriminatory access to operator services or directory assistance, to process all calls from competing providers on the same terms as calls from its own customers.

B. Actions To Implement Section 251(c)(5)

16. In addition to the duties imposed by section 251(b)(3) on all LECs, new section 251(c)(5) imposes upon incumbent LECs the duty to ''provide reasonable public notice of changes in the information necessary for the transmission and routing of services using that local exchange carrier's facilities or networks, as well as of any other changes that would affect the interoperability of those facilities or networks.''[24] We adopt broad guidelines

[19] 47 U.S.C. 271(e)(2)(A).

[20] 47 U.S.C. 271(c)(2)(B)(xii). We decline to address section 271(c)(2)(B) issues in this *Order*. We will consider each BOC's application to enter in-region, interLATA services pursuant to section 271(c)(2)(B) on a case-by-case basis to determine whether the BOC has complied with section 271(c)(2)(B)(xii).

[21] 47 U.S.C. 251(b)(3).

[22] *Id*.

[23] *Id*.

[24] An incumbent LEC, with respect to an area, is defined under the 1996 Act as ''the local exchange carrier that: (A) on the date of enactment of the Telecommunications Act of 1996, provided telephone exchange service in such area; and (B)(i) on such date of enactment, was deemed to be a member of the exchange carrier association pursuant to section 69.601(b) of the Commission's regulations (47 CFR 69.601(b)); or (ii) is a person or entity that, on or after such date of enactment,

to implement section 251(c)(5). We also specify how public notice must be made whenever an upcoming change may affect the way in which a competing service provider transmits, routes, or otherwise provides its services.

17. We conclude that ''information necessary for transmission and routing'' in section 251(c)(5) means any information in the incumbent LEC's possession that affects a competing service provider's performance or ability to provide either information or telecommunications services. We define ''interoperability'' as the ability of two or more facilities, or networks, to be connected, to exchange information, and to use the information that has been exchanged.

C. Actions Taken To Implement Section 251(e)

18. New section 251(e)(1) restates the Commission's authority over matters relating to the administration of numbering resources by giving the Commission ''exclusive jurisdiction over those portions of the North American Numbering Plan that pertain to the United States.'' [25] This section also requires the Commission to ''create or designate one or more impartial entities to administer telecommunications numbering and to make such numbers available on an equitable basis.'' [26] Finally, section 251(e)(2) provides that the cost of establishing telecommunications numbering administration arrangements ''shall be borne by all telecommunications carriers on a competitively neutral basis as determined by the Commission.'' [27] In this *Order*, we address whether further action is required to create or designate an impartial entity to administer telecommunications numbering. We clarify the states' role in number administration, and provide direction to states wishing to use area code overlay plans. We also clarify how cost recovery for numbering administration will occur. We deny the petition for expedited declaratory ruling filed by the Texas Commission based on our finding that the Texas Commission's wireless-only area code overlay plan violates the guidelines set forth in our *Ameritech Order*. We authorize Bellcore and the incumbent LECs to perform number administration functions as they did prior to the enactment of the 1996 Act until such functions are transferred to the new North American Numbering Plan Administrator.

19. We conclude that we have taken appropriate action to designate an impartial number administrator pursuant to section 251(e)(1). We further conclude that the Commission should retain its authority to set policy with respect to all facets of numbering administration to ensure the creation of a nationwide, uniform system of numbering that is essential to the efficient delivery of interstate and international telecommunications services and to the development of a competitive telecommunications services market. While we retain this policy-making authority, we authorize the states to resolve matters involving implementation of new area codes subject to the guidelines set forth in this *Order*.

20. In this *Order*, we also prohibit the use of service-specific or technology-specific area code overlay plans. States may employ all-services overlays only if they also mandate 10-digit dialing for all local calls within the area affected by the area code change and ensure the availability of at least one central office code in the existing area code to every entity authorized to provide local exchange service in that area, including CMRS providers.

21. To fulfill the mandate of section 251(e)(2), we require that (1) only ''telecommunications carriers,'' as defined in section 3(44) of the 1996 Act, shall contribute to the costs of numbering administration; [28] and (2) that such contributions shall be based on each contributor's gross revenues from its provision of telecommunications services reduced by all payments for telecommunications services and facilities that have been paid to other telecommunications carriers.

II. Dialing Parity Requirements

A. In General

22. With dialing parity a telephone customer can preselect any provider of telephone exchange service or telephone toll service without having to dial extra digits to route a call to that carrier's network. Until now, in most states, telephone customers wishing to have their intraLATA toll calls carried by a carrier other than their current provider of telephone exchange service had to dial a five- or seven-digit prefix or access code before dialing the called party's telephone number.[29] Presubscription to a carrier other than a customer's telephone exchange service provider has not been an option for *interstate*, intraLATA toll calls or in most states for *intrastate*, intraLATA toll calls.[30] In states where intrastate, intraLATA toll dialing parity is available, a customer may presubscribe to a carrier other than his or her provider of telephone exchange service and have all of that customer's intrastate, intraLATA toll calls carried by that selected carrier simply by dialing ''1'' plus the area code and telephone number of the called party.[31] The section 251(b)(3) dialing parity obligation will foster vigorous local exchange and long distance competition by ensuring that each customer has the freedom and flexibility to choose among different carriers for different services without the burden of dialing access codes.

The Need for Minimum Nationwide Dialing Parity Standards

a. Background and Comments

23. Section 251(b)(3) imposes on all LECs the ''duty to provide dialing parity to competing providers of telephone exchange service and telephone toll service.'' [32] In the *NPRM*, we sought comment on whether the Commission should adopt nationwide dialing parity standards and, if so, what those standards should be.[33]

24. A majority of commenters urge the Commission to adopt uniform nationwide dialing parity guidelines,

became a successor or assign of a member described in clause (i).'' 47 U.S.C. 251(h)(1).

[25] 47 U.S.C. 251(e)(1).

[26] *Id.*

[27] 47 U.S.C. 251(e)(2).

[28] The term ''telecommunications carrier'' means ''any provider of telecommunications services, except that such term does not include aggregators of telecommunications services (as defined in section 226). A telecommunications carrier shall be treated as a common carrier under this Act only to the extent that it is engaged in providing telecommunications services, except that the Commission shall determine whether the provision of fixed and mobile satellite service shall be treated as common carriage.'' 47 U.S.C. 153(44).

[29] Sometimes referred to as ''10XXX'' or ''101XXXX'' dialing, callers may reach a long distance carrier in states where such dialing arrangements are authorized by dialing a five-digit carrier access code (''10XXX,'' with ''XXX'' representing a three-digit carrier identification code) or a seven digit carrier access code (''101XXXX,'' with ''XXXX'' representing a carrier identification code).

[30] An ''interstate, intraLATA toll call'' is a call that: (1) Crosses a state boundary but does not cross a LATA boundary; and (2) is subject to a charge. A call from Philadelphia, Pennsylvania to Cherry Hill, New Jersey (currently handled by Bell Atlantic) is an example of such a call.

[31] It is our understanding that some form of intraLATA toll dialing parity is available or has been ordered in Alaska, Arizona, Connecticut, Florida, Georgia, Illinois, Kentucky, Michigan, Minnesota, New Jersey, New York, Ohio, Pennsylvania, West Virginia, Wisconsin and Wyoming. *See Ex parte* letter from Charles D. Cosson, USTA, to William F. Caton, Acting Secretary, Federal Communications Commission, filed in CC Docket No. 96–98, July 10, 1996, at 2.

[32] 47 U.S.C. 251(b)(3).

[33] *NPRM* at paras. 206, 207, 209–213, 218, 219.

but commenters differ on how detailed such federal rules should be. For example, the Telecommunications Resellers Association maintains that specific national standards are needed to ensure that competing providers are able to utilize common network designs in multiple markets and to prevent incumbent LECs from ''gaming'' or ''manipulating the processes'' of the states.[34] Ameritech urges the Commission to adopt ''broad rules that afford sufficient flexibility to accommodate local conditions.''[35] Other commenters, such as Bell Atlantic, opposing the adoption of federal dialing parity standards, assert that the proponents of such standards have failed to demonstrate how they or consumers have been harmed by ''locally tailored implementation'' of dialing parity in the intraLATA toll markets.[36] Without such a demonstration, argues Bell Atlantic, the Commission should not interfere with states' activities.[37] Cincinnati Bell Telephone Company (CBT) likewise opposes federal standards, maintaining that so long as a state regulatory commission adopts a toll dialing parity arrangement that ''offers consumers a choice from at least two carriers, one of which is the local exchange carrier, the requirements of the 1996 Act have been met.''[38]

b. Discussion

25. We conclude that the purpose of the statutory dialing parity requirements—to facilitate the introduction of competition in the local and toll markets—is best served by the adoption of broad guidelines and minimum federal standards that build upon the states' experiences. We conclude that such minimum nationwide standards will facilitate competition to the extent that new entrants seeking to offer regional or national services will not be subjected to an array of differing state standards and timetables.[39] We note that our conclusion to adopt nationwide dialing parity standards is consistent with our conclusion in the *First Report and Order* that nationwide standards to implement other section 251 provisions are necessary to facilitate competition by serving as a backdrop against which interconnection negotiations and arbitration can occur.[40] We are persuaded that, contrary to the views of Bell Atlantic, the failure to adopt minimum federal standards would harm both new entrants and consumers by delaying the introduction of competition and imposing additional costs on competitors, including small entities, particularly when different network configurations are required in each market. We conclude that uniform standards—in some cases minimum, uniform standards—will speed competitive entry by more promptly opening the local and toll markets to competition.

2. Scope of the Dialing Parity Requirements

a. Background

26. Under section 251(b)(3) a LEC must provide dialing parity only to competing providers of telephone exchange service and telephone toll service.[41] The scope of the obligation to provide dialing parity, however, is not limited to a particular type of traffic or service. Section 251(b)(3) makes no distinction among international, interstate and intrastate traffic for purposes of the dialing parity provisions.[42] The statutory definition of ''dialing parity'' also contains no such distinctions and, instead, speaks generally in terms of the provision of ''telecommunications services'' by ''a person that is not an affiliate of a local exchange carrier.''[43] Based on the absence of any such distinctions in defining the scope of the dialing parity requirements, the *NPRM* tentatively concluded that section 251(b)(3) creates a duty to provide dialing parity to competing providers of telephone exchange service and telephone toll service with respect to all telecommunications services that require dialing to route a call, and encompasses international as well as interstate and intrastate, local and toll services.[44]

b. Comments

27. Numerous parties express support for the Commission's tentative conclusion.[45] Several parties qualify their support for this conclusion, however, by asserting that the duty to provide dialing parity to competing providers of telephone toll service applies to international calls only to the extent that it entitles a customer to route automatically, without the use of an access code, all of the customer's international calls to his or her presubscribed interLATA long distance carrier.[46] These parties maintain that section 251(b)(3) does not require LECs to provide customers a separate presubscription choice for international calling.[47]

28. A broad range of parties also support the tentative conclusion that section 251(b)(3) imposes a duty on the LEC to provide both local and toll dialing parity.[48] Two parties reject this tentative conclusion, arguing that the dialing parity requirements apply only to local calling and do not extend to toll services.[49] Specifically, Lincoln Telephone and the Pennsylvania Commission contend that Congress addressed toll dialing parity only in section 271(e)(2) of the 1996 Act as it relates to the conditions under which a BOC may enter the in-region, interLATA toll business and question the Commission's authority to implement toll dialing parity requirements.[50] U S WEST similarly argues that section 251(b)(3) imposes only a duty to provide local dialing parity and suggests that the only affirmative obligation to provide toll dialing parity is contained in the equal access provisions of section 251(g) of the 1996 Act, which, U S WEST states, applies only to the BOCs and GTE.[51] Lincoln Telephone makes the additional argument that competitive providers wishing to enter the intraLATA toll market should be required to ''share responsibility for serving the entire LATA, rather than simply selecting the lowest cost customers from the most profitable exchanges without regard to that practice's effect on other customers.''[52] The imposition of such a requirement, according to Lincoln Telephone, would ''reflect a commitment to affordable universal service.''[53]

c. Discussion

29. We adopt our tentative conclusion that section 251(b)(3) creates a duty to provide dialing parity to competing

[34] Telecommunications Resellers Association reply at 8–9.

[35] Ameritech reply at *i.*

[36] Bell Atlantic reply at 2.

[37] *Id.*

[38] CBT comments at 5.

[39] We note that section 271(e)(2)(B) precludes most states from requiring a BOC to implement intraLATA toll dialing parity in a state before the BOC has received authority to provide in-region, interLATA services in such state or before three years after enactment of the 1996 Act, whichever is earlier. 47 U.S.C. 271(e)(2)(B).

[40] See *First Report and Order* at section II.

[41] 47 U.S.C. 251(b)(3).

[42] *Id.*

[43] 47 U.S.C. 153(15).

[44] *NPRM* at para. 206.

[45] *See, e.g.,* MFS comments at 2; California Commission comments at 3.

[46] *See, e.g.,* Sprint comments at 4–5; SBC comments at 5.

[47] *Id.*

[48] *See, e.g.,* Excel comments at 6; MCI comments at 2; BellSouth comments at 9.

[49] Lincoln Telephone comments at 2–3; Pennsylvania Commission comments at 1–2.

[50] *Id.*

[51] U S WEST comments at 4–5.

[52] Lincoln Telephone comments at 5.

[53] *Id.* at 6.

providers of telephone exchange service and telephone toll service with respect to all telecommunications services that require dialing to route a call, and encompasses international as well as interstate and intrastate, local and toll services.[54] We note that section 251(b)(3) does not limit the types of traffic or services for which dialing parity must be provided to competing providers of telephone exchange and telephone toll service. The reference to these types of providers clearly shows that dialing parity must be provided for exchange service and toll service. Nothing in the statutory language limits the scope of the dialing parity obligation to exchange and toll services or distinguishes among the various types of telecommunications services in imposing the dialing parity obligations. This conclusion is further supported by the statutory definition of dialing parity insofar as it refers to the provision of ''telecommunications services'' generally without distinction among various types of telecommunications services.[55] In addition, we are not persuaded that section 251(g) relieves certain LECs of the duty to provide toll dialing parity. That section contains no reference or cross reference to dialing parity or to section 251(b)(3). Section 251(g) preserves the equal access obligations already imposed on the BOCs and GTE, but does not exempt them or other LECs from the toll dialing parity requirements. Finally, we note that CMRS providers are not required to provide dialing parity or nondiscriminatory access under section 251(b)(3) because the Commission has not determined that CMRS providers are LECs and section 332(c) of the Communications Act of 1934 provides that a ''person engaged in the provision of commercial mobile services * * * shall not be required to provide equal access to common carriers for the provision of toll services.'' [56]

30. Finally, concerning Lincoln Telephone's proposal to require competitive providers of intraLATA toll service to serve an entire LATA, rather than merely certain low cost customers within a LATA, we note that Lincoln Telephone, in essence, is asking us to condition a carrier's receipt of dialing parity upon that carrier's assuming the obligation of an ''eligible'' telecommunications carrier.[57] We find neither the language of section 251(b)(3) nor its legislative history supports the conclusion that Congress intended to condition a carrier's right to receive the benefits of dialing parity upon its assuming the obligations of an eligible telecommunications carrier. The issue of encouraging carriers to provide universal service throughout a service territory is beyond the scope of this proceeding.[58] Also, for the Commission to make LATA-wide or state-wide service a precondition of entry into that LATA or state would be to erect a major legal barrier to entry, particularly for smaller telecommunications services providers, that is contrary to the basic thrust of the 1996 Act.

B. Implementation of the Toll Dialing Parity Requirements

1. Presubscription Method of Achieving Toll Dialing Parity

a. Background

31. The statutory definition of dialing parity provides that the customer must have the ability to choose ''from among 2 or more telecommunications services providers (including such local exchange carrier).'' [59] The definition also provides that customers must be able to exercise this choice by being able ''to route automatically without the use of access codes, their telecommunications to the telecommunications services provider of the customer's designation.'' [60] Thus, LECs are precluded from relying on access codes as a means of providing dialing parity to competitive service providers.[61] The 1996 Act, however, does not specify what methods should be used to implement dialing parity. The *NPRM* tentatively concluded that presubscription represents the most feasible method of achieving dialing parity in long distance markets consistent with the statutory definition of dialing parity and sought comment as to this tentative conclusion.[62] In this context, the *NPRM* defined ''presubscription'' as the process by which a customer preselects a carrier to which all of a particular category or categories of calls on the customer's line will be routed automatically.[63]

32. As stated in the *NPRM,* presubscription to a carrier other than the customer's local exchange carrier has not been available for *interstate,* intraLATA toll calls nor has it been available in most states for *intrastate,* intraLATA toll calls.[64] Instead, LECs automatically carry these calls rather than routing them to a presubscribed carrier of the customer's choice. If the state from which the customer is calling has authorized competition, but has not ordered presubscription in the intraLATA toll market, a customer wishing to route an intraLATA toll call to an alternative carrier typically must dial the carrier access code of the alternative carrier.

b. Comments

33. Nearly all parties concur in the Commission's tentative conclusion that presubscription represents the most feasible method of achieving toll dialing parity consistent with the statutory definition of dialing parity.[65] PacTel and Lincoln Telephone suggest that presubscription is not required to achieve toll dialing parity so long as customers can reach competing toll carriers through the use of carrier access codes.[66] Finally, BellSouth argues that the toll dialing parity requirement is satisfied by ''removing the intraLATA default to the incumbent LEC, thus assuring that no additional digits need to be dialed in order to reach carriers competing with the incumbent LEC for intraLATA toll service.'' [67] BellSouth further argues that the Commission should confirm that such arrangements are consistent with the statutory dialing parity requirements.[68]

c. Discussion

34. We adopt our tentative conclusion that the dialing parity requirement for toll calling can best be achieved through presubscription because that method would enable customers to route a

[54] *NPRM* at para. 206.

[55] The issue of whether a separate presubscription choice is required for international, interstate, and intrastate toll calls is discussed more fully in section II.B(2) *infra.*

[56] 47 U.S.C. 332(c)(8).

[57] An eligible telecommunications carrier is a common carrier that offers all services that are supported by federal universal service support mechanisms under section 254(c) and that uses ''media of general distribution'' to advertise the availability of those services and its charges for them. 47 U.S.C. 214(e)(1). The issue of which services should receive support from universal service support mechanisms is being addressed by the Commission and the Federal-State Joint Board on universal service, as required by new section 254 of the Communications Act, as amended by the 1996 Act. *See Federal-State Joint Board on Universal Service,* CC Docket No. 96–45, Notice of Proposed Rulemaking and Order Establishing Joint Board, FCC 96–93, (released March 8, 1996) (*Universal Service NPRM*) (proposing rules to implement section 254 of the 1996 Act) 61 FR 10499 (March 14, 1996).

[58] *See Universal Service NPRM.*

[59] 47 U.S.C. 153(15).

[60] *Id.*

[61] *Id.*

[62] *NPRM* at para. 207.

[63] *Id.*

[64] *Id.* at para. 208.

[65] *See, e.g.,* Ohio Commission comments at 6; NEXTLINK comments at 9.

[66] *See, e.g.,* PacTel reply at 10 (''Toll dialing parity, on the other hand, should mean that customers can reach competing toll carriers on the same dialing basis, including through the use of carrier access codes, with an equal number of digits.''); Lincoln Telephone comments at 2–3.

[67] BellSouth comments at 11 n.23.

[68] *Id.*

particular category of traffic to a preselected carrier without having to dial access codes. We note that the use of access codes to route calls among competing providers of telephone toll service is precluded under the statutory definition of dialing parity.[69] Accordingly, we disagree with those parties who contend that toll dialing parity can be achieved through the use of access codes in a manner that is consistent with the statutory definition of dialing parity.[70] We also cannot conclude that the toll dialing parity requirement is satisfied by removing the intraLATA default, as BellSouth maintains.[71] Removing the intraLATA default would not satisfy the toll dialing parity requirement unless the LEC also uses the full 2-PIC presubscription methodology discussed below.[72]

2. Categories of Domestic, Long Distance Traffic Subject to Presubscription

a. Background

35. In the *NPRM*, the Commission sought comment as to the categories of long distance traffic (*e.g.*, intrastate, interstate, and international traffic) for which a customer should be entitled to choose presubscribed carriers.[73] The *NPRM* also sought comment on specific alternative methods for implementing local and toll dialing parity, including various forms of presubscription, in the interstate and intrastate long distance and international markets, that are consistent with the statutory requirements set forth in the 1996 Act.[74]

b. Comments

36. Most parties appear to agree that customers should be entitled to presubscribe to two separate carriers for their toll calling.[75] There is a lack of consensus in the record, however, regarding how the Commission should define the presubscription requirement. USTA, for example, argues that ''[a]ll telecommunications carriers, including LECs, should be permitted to define the scope of local service and toll service in response to market forces.'' [76] USTA further argues that the ''relevant distinction, for the long term, will be between intrastate and interstate toll traffic.'' [77] Sprint, on the other hand, argues in favor of maintaining a presubscription requirement based on LATA boundaries and recommends that customers continue to be allowed to choose separate intraLATA and interLATA toll carriers.[78] Sprint urges us to maintain the LATA distinction, asserting that ''competition over the past 12 years has developed around the LATA concept, and presubscription has for the most part already occurred along these lines.'' [79]

c. Discussion

37. With respect to toll service, we conclude that section 251(b)(3) requires, at a minimum, that customers be entitled to choose presubscribed carriers for their intraLATA and interLATA toll calls. Because of the variations that exist among LATA boundaries and toll traffic within, and among, the various states, we have also concluded that each state should have the opportunity to determine whether customers should be able to presubscribe to carriers for intrastate toll service and for interstate toll service in lieu of the intraLATA and interLATA toll presubscription dichotomy that we have established as a minimum nationwide standard at this time. Although toll dialing parity typically has been based on LATA boundaries in multi-LATA states where it has been implemented, we do not impose a requirement that toll dialing parity be based only on LATA boundaries given our expectation that implementation of the 1996 Act eventually will diminish the significance of LATA boundaries.[80] We are aware that BOCs remain subject to certain LATA boundary restrictions for at least the near-term and that some BOCs may find it technically infeasible, or otherwise undesirable, to implement toll dialing parity based on state boundaries.[81] We thus conclude that states should be able to take the relevance of those factors into account, where applicable, and have the flexibility to require that toll dialing parity implementation be based on state boundaries where they determine that implementing toll dialing parity on the basis of state boundaries would be pro-competitive and otherwise in the public interest. In Alaska and Hawaii, states with no LATAs, toll dialing parity will continue to be based on state boundaries.

38. We also direct each LEC to submit to the state regulatory commission for each state in which it provides telephone exchange service the LEC's plan for implementing toll dialing parity. That plan must contain detailed implementation information, including the proposed date for dialing parity implementation for that exchange that the LEC operates in each state, and the method it proposes for enabling customers to select alternative providers of telephone toll service. For a LEC, other than a BOC, the plan also must identify the LATA with which the LEC proposes to associate.[82]

39. We find that the states are best able to evaluate implementation plans in a way that will avoid service disruptions for subscribers and promote competition in the intrastate toll market. A LEC must first obtain state approval of its implementation plan before it implements toll dialing parity. If the LEC determines that a state commission elects not to evaluate the LEC's toll dialing parity implementation plan for

[69] *See* 47 U.S.C. 153(15).

[70] Although the use of access codes to access competing providers of telephone toll service does not constitute dialing parity as defined in 47 U.S.C. 153(15), we do not intend to preclude their use where a customer wishes to route a call to a carrier other than his or her presubscribed intraLATA toll carrier.

[71] We understand BellSouth's reference to ''removing the intraLATA default'' to mean that BellSouth would modify its switches so they no longer automatically route all intraLATA toll calls to BellSouth and thus, would permit customers to choose an alternative intraLATA toll carrier.

[72] For a discussion of the full 2-PIC methodology, *see* section II.B(4) *infra*.

[73] *NPRM* at para. 210.

[74] *Id*. at para. 209.

[75] *See, e.g.*, Ohio Consumers' Counsel comments at 2; *see also* MCI comments at 3 (recommending that call types subject to presubscription should include: 1-plus/0-plus interexchange, 7-digit interexchange and 1+555–1212 calls); *cf.* GTE comments at 9 (maintaining that decisions regarding appropriate presubscription categories should be left to state regulatory agencies on theory that states are best positioned to balance value of additional carrier choices against higher administrative and network design costs associated with increased number of presubscription choices).

[76] *Ex parte* letter from Charles D. Cosson, USTA, to William F. Caton, Acting Secretary, Federal Communications Commission, filed in CC Docket No. 96–98, June 17, 1996, at 2.

[77] USTA comments at 3 n.2; *see also* MFS reply at 12–13 (''The Commission should recognize that rules for intraLATA presubscription are transitory. At some point, when the BOCs and GTE are authorized to provide both interLATA and intraLATA service, the distinctions between interLATA and intraLATA calls will no longer be meaningful, and the Commission should be prepared to revisit and eliminate these distinctions.'').

[78] Sprint comments at 4.

[79] *Id*. At the same time, Sprint asks that we eliminate the intrastate intraLATA/interstate intraLATA distinction and make all intraLATA toll calls (both interstate and intrastate) subject to a single presubscription.

[80] USTA correctly notes that independent exchange carriers have not been subject to the interLATA line of business restrictions that were imposed on the BOCs pursuant to the AT&T Consent Decree. *See United States* v. *American Telephone and Telegraph Co.*, 552 F. Supp. 226 (D.D.C. 1982). *See* USTA comments at 3 n.2.

[81] For example, where BOCs receive authority to provide in-region, interLATA services, they are required to provide such services through a separate affiliate for at least three years pursuant to section 272 of the 1996 Act. *See* 47 U.S.C. §§ 272 (a)(2), (f)(1). Accordingly, it appears that the LATA distinction will remain relevant insofar as it will continue to define the geographic areas in which a BOC must provide toll services through an affiliate and those in which it may provide toll services directly.

[82] States may require a LEC to provide other categories of information in its plan in addition to the information categories stated here.

that state sufficiently in advance of the date on which a LEC is required to implement toll dialing parity pursuant to the Commission's rules, we direct the LEC to file its plan with the Commission.[83] The Commission will release a public notice of any such LEC filings, in order to give interested parties an opportunity to comment. The LEC's plan will be deemed approved on the fifteenth day following release of the Commission's public notice unless, no later than the fourteenth day following the release of the Commission's public notice, either: (1) The Common Carrier Bureau notifies the LEC that its plan will not be deemed approved on the fifteenth day; or (2) an opposition to the plan is filed with the Commission and served on the LEC that filed the plan. The opposition must state specific reasons why the plan does not serve the public interest.

40. If one or more oppositions are filed, the LEC that filed the plan will have seven additional days (*i.e.*, until no later than the twenty-first day following the release of the Commission's public notice) within which to file a reply to the opposition(s) and serve it on all parties that filed oppositions. The response shall: (a) Include information responsive to the allegations and concerns identified by the opposing party; and (b) identify possible revisions to the plan that will address the opposing party's concerns. In the case of such contested toll dialing parity plans, the Common Carrier Bureau will act on the plan within ninety days of the date on which the Commission released its public notice.[84] In the event the Bureau fails to act within 90 days, the plan will not go into effect pending Bureau action. If the plan is not contested but did not go into effect on the fifteenth day after the Commission released its public notice, and the Common Carrier Bureau fails to act on the plan within ninety days of the date on which the Commission released its public notice, the plan will be deemed approved without further Commission action on the ninety-first day after the date on which the Commission released its public notice of the plan's filing.

41. A LEC's plan may not accomplish toll dialing parity by automatically assigning toll customers to itself, to a customer's currently presubscribed interLATA or interstate toll carrier, or to any other carrier except when, in a state that already has implemented intrastate, intraLATA toll dialing parity, the subscriber has selected the same intraLATA and interLATA presubscribed carrier. Finally, when LATA boundaries encompass parts of two adjacent states, we permit the LEC to implement in each state the procedures that that state approved for implementing toll dialing parity within its borders. If a state commission elects not to evaluate the LEC's intrastate toll dialing parity plan, we direct the LEC to file both its intrastate toll dialing plan and its interstate toll dialing plan with the Commission. The plans will be acted on in accordance with the procedures outlined above.

42. We note that the minimum intraLATA/interLATA toll presubscription requirement that we adopt in this *Order* is necessarily an interim measure. Specifically, we expect that the development of the ''multi-PIC'' or ''smart-PIC'' presubscription methodology will enable customers to presubscribe to multiple carriers for various categories of long-distance calling.[85] Thus, in time, we anticipate that service markets, and the presubscription requirement in particular, will be defined by technological, economic and marketing considerations and that LATA or state boundary distinctions will diminish for purposes of the toll dialing parity requirements. As the record before us provides an inadequate basis for adopting more specific requirements now, we intend to monitor developments in this area and issue a Further Notice of Proposed Rulemaking to address these long range considerations so that end users will be able to preselect alternative providers for operator services, directory assistance, international and other services.

3. Separate Presubscription for International Calls

a. Background and Comments

43. The *NPRM* sought comment on whether customers should be entitled to choose a presubscribed carrier for international calls and on what Commission action, if any, is necessary to implement dialing parity for such calls.[86]

44. Most parties maintain that the 1996 Act does not require, and the Commission should not mandate, a separate presubscription choice for international calling.[87] Several parties take the position that the toll dialing parity requirement applies to international calling only to the extent that it entitles a customer to route automatically without the use of an access code the customer's international calls to the customer's presubscribed interLATA carrier.[88] A number of parties contend that the technology required to support a separate presubscription choice for international calling, the so-called multi-PIC or smart-PIC methodology, is not currently available.[89] USTA suggests that the cost of providing a separate presubscription choice for international calling should be weighed against the amount of customer demand for such an option, and the harm to consumers that may result from a potentially greater number of unauthorized carrier changes.[90] AT&T, Ameritech, Sprint and the Indiana Commission urge the Commission to revisit the issue of a separate presubscription choice for international calling only after it is demonstrated to be technically and economically feasible.[91]

b. Discussion

45. While we believe that a separate presubscription choice for international calling is consistent with the intent of the 1996 Act because it could foster additional carrier competition, we recognize that technical limitations preclude our imposing such a

[83] *See infra* para. 62 , which sets forth the dates by which a dialing parity implementation plan must be filed with the Commission in the event that a state will not be evaluating the plan.

[84] We delegate to the Chief, Common Carrier Bureau, the authority to approve, modify, or require the refiling of each plan that is filed with the Commission pursuant to this requirement.

[85] The terms ''smart-PIC'' and ''multi-PIC'' have been defined differently in various contexts. For example, GVNW states that the multi-PIC presubscription method would permit customers to choose up to three different toll carriers, which, GVNW suggests, might include an intraLATA toll, interLATA toll and an international service provider. *See* GVNW comments at 6. GVNW states that the smart-PIC presubscription method would allow customers more than three carrier choices, ''as when a fourth PIC for interstate, intraLATA is needed.'' *Id*. In a recent state commission decision, the terms ''multi-PIC'' and ''smart-PIC,'' deemed to be synonymous, were defined as the ability to ''select multiple carriers for various subdivisions of their interLATA and intraLATA toll calls.'' *Local Exchange Competition and Other Competitive Issues*, Case No. 95–845–TP–COL, 164 P.U.R.4th 214 (Ohio Pub. Util. Comm'n Sept. 27, 1995).

[86] *NPRM* at para. 210.

[87] *See, e.g.*, SBC reply at 3 n.6; AT&T comments at 4 n.4.

[88] *See, e.g.*, SBC comments at 5.

[89] Ameritech comments at 18–19; Bell Atlantic reply at 3; CBT comments at 4–6; SBC comments at 5; U S WEST comments at 6; Sprint comments at 4–6; USTA reply at 2; *cf.* Sprint comments at 6 (noting implementation of multi-PIC system by GTE-Hawaiian Telephone Company that offers customers a separate international presubscription option).

[90] USTA comments at 3.

[91] Ameritech comments at 18–19; AT&T comments at 5 n.6; Sprint comments at 5; Indiana Commission Staff comments at 9.

nationwide requirement at this time.[92] To the extent that such a capability becomes technically feasible and is ordered in a particular state, we find that the deployment of a separate presubscription choice for international calling is consistent with the 1996 Act. We will address in a further notice at a future date the issue of how soon a separate presubscription choice for international calling will be technically feasible on a nationwide basis.[93]

4. Full 2-PIC Presubscription Method

a. Background

46. In the *NPRM*, the Commission sought comment as to whether the Commission should adopt a nationwide presubscription methodology for implementing the toll dialing parity requirements.[94] The *NPRM* also noted that states have adopted a variety of intraLATA toll dialing parity requirements and implementation methodologies.[95]

47. Among the presubscription methodologies that states have examined are the ''modified 2-PIC,'' the ''full 2-PIC,'' and the ''multi-PIC'' or ''smart-PIC'' methods.[96] The modified 2-PIC method generally allows a customer to presubscribe to a telecommunications carrier for all interLATA toll calls and to presubscribe to either the customer's presubscribed interLATA carrier or the customer's local exchange carrier for all intraLATA toll calls. The full 2-PIC method generally allows customers to presubscribe to a telecommunications carrier for all interLATA toll calls and to presubscribe to another telecommunications carrier (including, but not limited to, the customer's local exchange carrier) for all intraLATA toll calls. The multi-PIC or smart-PIC methods, as known today, would allow customers to presubscribe to multiple carriers, each one of which would be selected to transport a specified component of toll traffic.

b. Comments

48. Nearly all parties favor adoption of the full 2-PIC method.[97] Few parties favor deploying the modified 2-PIC method.[98] Likewise, few commenters favor immediate deployment of the multi-PIC method.[99] Several parties suggest that the multi-PIC or smart-PIC methodology and technology may warrant consideration in the future, but is currently unavailable.[100] Others maintain that the Commission should conclude that the 2–PIC approach is consistent with the 1996 Act based on the theory that the 1996 Act does not require more than a two-PIC capability to achieve toll dialing parity.[101]

c. Discussion

49. We adopt in this *Order* the full 2–PIC method as the minimum presubscription standard. Under our rules and pursuant to section 251(d)(3),[102] however, state commissions may impose more stringent presubscription requirements, such as multi-PIC or smart-PIC.

50. We adopt the full 2–PIC method as the minimum presubscription standard at this time for several reasons. We conclude that, as compared with the modified 2–PIC method, the full 2–PIC method will maximize choice for consumers and open the long-distance telecommunications markets to a greater number of competitive services providers, including smaller providers, and thus is more consistent with the congressional objectives underlying enactment of section 251(b)(3). Second, this method clearly is preferred by the majority of state regulators and telecommunications service providers.[103] Third, as compared with the multi-PIC method, the technology for the full 2–PIC method is widely available and well defined. By contrast, there is no evidence in the record to support a finding that the technical and economic feasibility of the multi-PIC method has been demonstrated on a nationwide basis. We conclude that this national standard should speed competitive entry into the intraLATA and intrastate toll markets while providing states that are considering a more stringent presubscription method, *i.e.*, multi-PIC or smart-PIC, flexibility to impose such additional requirements. Until the Commission considers the issue of multi-PIC or smart-PIC methods in a further notice, we believe that the states are best situated to evaluate the technical feasibility and economic impact of such methods on LECs, including smaller LECs, in their jurisdictions.

5. Deployment of Presubscription Software in Each End Office

a. Background

51. With end office equal access, presubscription software is installed at each end office switch within the LEC's service areas. Toll calls are then directly routed at each end office switch to the presubscribed provider of telephone toll service. With centralized equal access, presubscription software is installed at a central tandem switch location. With the latter, toll calls are routed from an end office to a tandem switch for presubscription information.[104] Providers of telephone toll service may connect at the tandem to receive this traffic rather than at each individual end office that is associated with the tandem.

b. Comments

52. MCI raises the issue of whether presubscription software should be deployed in each end office or at a single tandem location and proposes that the Commission require end office equal access rather than centralized equal access.[105] Specifically, MCI argues that end office equal access represents a superior form of access to the extent that

[92] Bell Atlantic reply at 3; CBT comments at 4–6; SBC comments at 5; U S WEST comments at 6; Sprint comments at 4–6; USTA reply at 2.

[93] Sprint comments at 6 (noting development of multi-PIC system by GTE-Hawaiian Telephone that offers customers a separate international presubscription option). It is our understanding that GTE Hawaiian Telephone Company has multi-primary interexchange carrier capability that enables customers in Hawaii to select three long-distance carriers, *i.e.*, an intrastate, interstate, and international carrier. *See ex parte* letter from Clarence Clay M. Nagao, Chief Counsel, State of Hawaii Public Utilities Commission, Department of Budget and Finance, to Mr. William F. Caton, Acting Secretary, Federal Communications Commission, filed in CC Docket No. 96–98, July 2, 1996. We note that the arrangement by which GTE Hawaiian Telephone Company provides a third carrier choice for international calling is a unique, interim solution that uses a combination of carrier identification codes and switch routing databases. This solution is not suitable for nationwide deployment because the switch database is too limited in size and the supply of CICs too small to support an adequate number of interLATA/international carrier combinations in many areas of the country. *Ex parte* letter from F.G. Maxson, GTE Service Corporation, to William F. Caton, Acting Secretary, Federal Communications Commission, filed in CC Docket No. 96–98, August 6, 1996.

[94] *NPRM* at para. 210.

[95] *Id.*

[96] *Id.*

[97] *See, e.g.*, Michigan Commission Staff comments at 4; MCI comments at 5–6, Pennsylvania Commission comments at 2; SBC reply at 2; PacTel reply at 10–11.

[98] *See, e.g.*, Sprint comments at 5; USTA comments at 3.

[99] GSA/DOD reply at 4 (In initial comments, ''GSA favored a 'multi-PIC' arrangement. * * * Although there was conceptual support for eventual implementation of the 'multi-PIC' methodology, it is clear that the technical and economic feasibility of this approach has not yet been demonstrated.''); GVNW comments at 6 (''[T]he FCC should not require [the smart-PIC method] on a nationwide basis or schedule, as this will result in uneconomic network upgrades, added costs for the incumbent LECs, and higher prices to customers and competitors'').

[100] *See, e.g.*, Ameritech comments at 18–19; AT&T comments at 5 n.6; CBT comments at 4; GVNW comments at 3; Indiana Commission Staff comments at 9; Sprint comments at 5.

[101] SBC reply at 3; GTE reply at 12–13.

[102] 47 U.S.C. 251(d)(3).

[103] *See, e.g.*, Pennsylvania Commission comments at 2; SBC reply at 2; PacTel reply at 10–11.

[104] In this context, presubscription information refers to the information that is used by the switch to determine which interconnecting carrier carries and bills for the call.

[105] MCI comments at 5.

it enhances redundancy and reduces post dial delays.[106] Centralized equal access should not be permitted, MCI maintains, insofar as that approach requires that all end offices receive the equal access features from the tandem and any interruption in service from the tandem can affect a larger number of subscribers on the system.[107] In addition, because calls are routed from the end office to the tandem and back, MCI contends that centralized equal access would result in significant post-dial delay.[108] MCI does suggest, however, that in areas that ''would not otherwise convert to interLATA or intraLATA equal access, centralized equal access provides consumers at least a limited form of carrier choice.'' [109]

53. Two commenters who are centralized equal access providers oppose MCI's position.[110] Specifically, Iowa Network Services and MIEAC counter that centralized equal access is not inferior to end office equal access and repeatedly has been found to serve the public interest by the Commission and numerous state regulatory commissions.[111] MIEAC takes issue with MCI's argument that centralized equal access is inferior to end office equal access, noting that recent technological advances, and the use of SS7 trunk signaling, in particular, have improved call set up times and reduced post dial delay.[112] Iowa Network Services calls the argument that centralized equal access provides less network redundancy a ''red herring'' and notes its recent installation of a redundant fiber ring facility to connect its participating exchanges, which will allow instant rerouting of traffic in the case of a facilities equipment failure.[113] Iowa Network Services also operates a ''diversity access tandem'' that provides switch redundancy should its primary tandem fail.[114] MIEAC argues that centralized equal access networks fully comply with the toll dialing parity requirement of section 251(b)(3) insofar as these networks support 2–PIC presubscription.[115] Finally, MIEAC and Iowa Network Services contend that centralized equal access represents an appropriate method of providing equal access in rural areas where it otherwise would not be technically or economically feasible.[116]

c. Discussion

54. The issue of presubscription software deployment was not raised in the *NPRM* and, as a result, few commenters address it. We conclude that the record is not sufficient for us to require LECs, pursuant to section 251(b)(3), to provide end office equal access rather than centralized equal access to competing providers of telephone toll service. No specific information is provided, let alone consensus reached in this record, on such threshold issues as the technical and economic feasibility of placing the software in one location over another. We note that while MCI and Iowa Network Services disagree generally on the benefits of deployment locations, neither addresses such important implementation issues as whether different switching equipment owned by various companies might provide obstacles to deployment, or the relevant costs associated with one deployment scheme over another. Iowa Network Services, we further note, does not address how its proposal would comport with the Commission's generally prescribed requirement under which most LECs are required to implement equal access at end offices.[117] Based on the reasons stated above, and based on our concern regarding the harm that could come to small telecommunications services providers if we adopt MCI's proposal, we decline to adopt at this time a requirement prescribing the location for deployment of presubscription software under section 251(b)(3).

C. Implementation Schedule for Toll Dialing Parity

1. Background and Comments

i. Timetable for BOCs

55. Section 271(e)(2)(A) requires a BOC to provide intraLATA toll dialing parity throughout a state ''coincident with'' its exercise of authority to provide in-region, interLATA services in that state.[118] Section 271(e)(2)(B) precludes most states from imposing intraLATA toll dialing parity requirements on a BOC before the earlier of the date on which a BOC is authorized to provide in-region, interLATA services in a state or three years from the date of enactment of the 1996 Act.[119] The *NPRM* sought comment on what implementation schedule should be adopted for all LECs.[120]

56. The BOCs generally argue that section 271(e)(2) establishes the relevant implementation schedule for all BOCs and, thereby, obviates the need for a nationwide implementation schedule for BOCs.[121] For example, Ameritech argues that, except in single-LATA states and where a state has previously ordered intraLATA presubscription, section 271(e)(2) requires a BOC to implement intraLATA toll dialing parity ''coincident with its exercise of in-region, interLATA authority'' or three years after enactment of the 1996 Act.[122] Other parties urge the Commission to require BOCs to implement toll dialing parity in advance of these dates on the theory that only the states, and not the Commission, are constrained by the limitations in section 271(e)(2)(B).[123] Frontier suggests that the Commission mandate that dialing parity be made available immediately for interstate, intraLATA toll calls.[124] AT&T asserts that ''except as provided in section 271(e)(2)(B), the Commission should require all Tier 1 LECs to implement dialing parity, utilizing the Full 2–PIC method, by January 1, 1997.'' [125] NYNEX maintains that the Commission should recognize and give effect to state orders granting deferrals or waivers of the toll dialing parity requirements.[126]

ii. Timetable for All Other LECs

57. For all other LECs, other than BOCs, the 1996 Act provides no timetable for implementing toll dialing parity. The *NPRM* sought comment on what implementation schedule should be adopted for all LECs.[127]

58. USTA argues that there is no need for a uniform implementation schedule and suggests that the Commission permit states to adopt their own timetables.[128] PacTel similarly opposes our adoption of an implementation

[106] *Id.*

[107] *Id.*

[108] *Id.* MCI does not attempt to define or quantify the term ''significant.''

[109] *Id.* at 5 n.7.

[110] *See generally* Iowa Network Services joint reply; MIEAC reply.

[111] Iowa Network Services joint reply at 4–7; MIEAC reply at 2–4.

[112] MIEAC reply at 3.

[113] Iowa Network Services joint reply at 5.

[114] *Id.*

[115] MIEAC reply at 3–4.

[116] *Id.* at 5–7; Iowa Network Services joint reply at 2 (noting that centralized equal access fosters intraLATA and interLATA competition by making equal access technology available in exchanges where installation of end office equal access is economically or technically infeasible).

[117] *See generally MTS and WATS Market Structure,* CC Docket No. 78–72, Phase III, 100 F.C.C. 2d 860 (1985) 50 FR 52964 (December 27, 1985).

[118] 47 U.S.C. 271(e)(2)(A).

[119] 47 U.S.C. 271(e)(2)(B). Exceptions from this requirement are made for single-LATA states and states that issued an order by December 19, 1995, requiring intraLATA toll dialing parity. *Id.*

[120] *NPRM* at para. 212.

[121] *See, e.g.,* Ameritech comments at 19.

[122] *Id.*

[123] *See, e.g.,* Sprint comments at 6 n.3.

[124] Frontier comments at 2.

[125] AT&T comments at 5.

[126] NYNEX comments at 3 n.7.

[127] NPRM at para. 212.

[128] USTA reply at 3–4.

schedule and advocates that all LECs be permitted to design their own schedules based on ''local conditions and state requirements.'' [129] In contrast, MCI urges the Commission to adopt an implementation schedule based on the concern that incumbent LECs, if permitted to design their own timetables, would delay implementation because they lack incentive to implement dialing parity quickly. TCC proposes that non-BOC incumbent LECs should be required to provide toll dialing parity by no later than January 1, 1997.[130] NECA argues that a LEC's obligation to provide dialing parity should be triggered only upon the receipt of a *bona fide* request from a competitive toll provider.[131] Finally, MFS suggests that incumbent LECs be required to implement intraLATA toll dialing parity within a year of the effective date of the rules, or by the date previously ordered by a state commission.[132] MFS also asks the Commission to adopt rules specifying that in any geographic area where a BOC is not required to provide intraLATA presubscription pursuant to section 271(e)(2)(A), no other LEC in that geographic area will be required to provide toll dialing parity until the BOC is required to provide it.[133]

2. Discussion

59. As discussed above, we require all LECs to provide intraLATA and interLATA toll dialing parity no later than February 8, 1999. In addition, we require a LEC, including a BOC, to provide toll dialing parity throughout a state based on LATA boundaries coincident with its provision of in-region, interLATA or in-region, interstate toll services in that state. As discussed below, for non-BOC LECs that currently are providing, or within a year of release of this *Order* begin to provide, in-region, interLATA or in-region, interstate toll service, we provide a grace period during which those LECs will be able to provide such toll service before having to provide toll dialing parity to their customers. Moreover, non-BOC LECs that implement intraLATA and interLATA toll dialing parity may choose whichever LATA within their state that they deem to be most appropriate to define the area within which they will offer intraLATA toll dialing parity. State commissions in ruling upon such a choice of LATA association shall determine whether the proposed LATA association is pro-competitive and otherwise in the public interest. We note, however, as discussed above, that states may redefine the toll dialing parity requirement based on state, rather than LATA, boundaries where a state deems such a requirement to be pro-competitive and otherwise in the public interest.

60. We decline to adopt the recommendations of parties that urge us to require BOCs to provide toll dialing parity in a state before the earlier of the date on which those BOCs receive authority to provide in-region, interLATA services in that state or February 8, 1999. Subject to the requirements of the 1996 Act, we do, however, authorize states to determine whether a more accelerated implementation schedule should be utilized for LECs operating within their jurisdictions.[134] Where a state issued an order by December 19, 1995 requiring a BOC to implement toll dialing parity in advance of the implementation deadlines we establish, we do not intend to extend the toll dialing parity implementation deadline for the BOC beyond the implementation deadline established by that state. In addition, where a state issued an order prior to the release of this *Order* requiring a LEC, other than a BOC, to implement toll dialing parity in advance of the implementation deadlines we establish, we do not intend to extend the toll dialing parity implementation deadline for the LEC beyond the implementation deadline established by that state.

61. We further conclude that LECs, other than BOCs, that begin providing in-region, interLATA or in-region, interstate toll services before August 8, 1997, including LECs that currently offer such services, are not required to implement toll dialing parity until August 8, 1997.[135] We do not mandate compliance with the toll dialing parity requirement by these LECs ''coincident with'' their provision of in-region, interLATA or in-region, interstate toll services because it would place certain carriers in violation of this order upon its release and would impose an unreasonably short timetable on others. To the extent that a LEC is unable to comply with the August 8, 1997 deadline, that LEC is required to notify the Commission's Common Carrier Bureau by May 8, 1997. The notification must state, in detail, the justification for the LEC's inability to comply by August 8, 1997 and set forth the date by which it will be able to implement toll dialing parity.[136] Finally, we have considered the arguments of LECs that seek to make their toll dialing parity obligation contingent upon the receipt of a *bona fide* request and conclude that special implementation schedules for smaller LECs are unnecessary because these LECs may petition their state commission, pursuant to section 251(f)(2), for a suspension or modification of the application of the dialing parity requirements.[137]

62. In summary, we establish the following toll dialing parity implementation schedule and filing deadlines for all LECs:

(a) Each LEC, including a BOC, must implement intraLATA and interLATA toll dialing parity based on LATA boundaries no later than February 8, 1999. If the state commission elects not to evaluate a LEC's toll dialing parity implementation plan,[138] the LEC must file that plan with the Commission not later than 180 days before February 8, 1999.

(b) Except as provided in subparagraph (c) below, a LEC, including a BOC, that begins to provide in-region, interLATA toll services or in-region, interstate toll services in a state before February 8, 1999, must implement intraLATA and interLATA toll dialing parity based on LATA boundaries coincident with its provision of in-region, interLATA or in-region, interstate toll services. If the state commission elects not to evaluate its toll dialing parity implementation

[129] PacTel reply at 12.

[130] TCC comments at 4.

[131] NECA reply at 3–4; *see also* Rural Tel. Coalition comments at 6–7; GVNW comments at 5.

[132] MFS comments at 6.

[133] *Id.; cf.* Ohio Commission comments at 9 (new entrant LECs should be required to implement intraLATA toll dialing parity coincident with their offering of local telephone service since new entrants can equip their network switches to provide dialing parity before installation).

[134] *See* 47 U.S.C. 271(e)(2)(b).

[135] We note that the 1996 Act distinguishes between in-region services, for which BOCs must receive Commission authority to provide under section 271(d)(1), 47 U.S.C. 271(d)(1), and out-of-region services, which BOCs are currently authorized to provide. *See* 47 U.S.C. 271(b)(1), (b)(2). We note that for non-BOC LECs, it is the provision of toll services outside of the LEC's study area or the provision of interstate toll services that triggers the duty to provide toll dialing parity. We use the term in-region, interLATA or in-region interstate toll services to include those toll services, the provision of which by a LEC triggers the LEC's duty to provide toll dialing parity.

[136] As recently noted in the context of waiver petitions for certain caller identification rules, the Commission will not hesitate to take enforcement action, including monetary fines and other remedial measures against carriers that are unable to provide a compelling justification for failing to comply with Commission rules, particularly when they have been given a reasonable period within which to comply. *See Rules and Policies Regarding Calling Number Identification Service—Caller ID,* CC Docket No. 91–281, Memorandum Opinion and Order, DA 96–875 (1996) 61 FR 20746 (May 8, 1996).

[137] 47 U.S.C. 251(f)(2).

[138] For a discussion of the content of and procedures relating to the toll dialing parity implementation plans, *see* section II.B(2) *supra.*

plan, the LEC must file such plan with the Commission not later than 180 days before the date on which it begins to provide in-region, interLATA toll services.

(c) A LEC, other than a BOC, that begins to provide in-region, interLATA or in-region, interstate toll services in a state before August 8, 1997, must implement intraLATA and interLATA toll dialing parity based on LATA boundaries by August 8, 1997. If the LEC is unable to comply with this August 8, 1997, implementation deadline, the LEC must notify the Commission's Common Carrier Bureau by May 8, 1997. At that time it must state its justification for noncompliance by August 8, 1997, and set forth the date by which it will be able to implement toll dialing parity. If the state commission elects not to evaluate the LEC's toll dialing parity implementation plan, the LEC must file such plan with the Commission not later than 90 days after publication of this *Order* in the Federal Register.

63. We further conclude that the 1996 Act does not authorize the Commission to give effect to a state order that purports to grant a BOC a deferral, waiver or suspension of the BOC's obligation to implement dialing parity. We note that section 251(f)(2) provides procedures for suspending or modifying application of the dialing parity requirements only for certain LECs, *i.e.*, those ''with fewer than 2 percent of the Nation's subscriber lines installed in the aggregate nationwide.'' [139] Given that section 251 contains no comparable procedures for larger LECs, we are persuaded that Congress intended the dialing parity requirements that we adopt pursuant to section 251(b)(3) to apply, without exception, to all LECs with 2 percent or more of the Nation's subscriber lines.

D. Implementation of the Local Dialing Parity Requirements

1. In General

a. Background

64. The *NPRM* tentatively concluded that, pursuant to section 251(b)(3), a LEC is required to permit telephone exchange service customers within a defined local calling area to dial the same number of digits to make a local telephone call, notwithstanding the identity of a customer's or the called party's local telephone service provider.[140] The *NPRM* sought comment on this tentative conclusion.[141]

b. Comments

65. Nearly all parties concur with the Commission's proposed interpretation of the local dialing parity requirements of section 251(b)(3).[142] Ameritech contends, however, that the 1996 Act requires only that local calls between competing LECs be dialed without the use of an access code.[143] Ameritech states that, while the Senate version of the dialing parity provision would have required LECs to provide customers with the ability ''to dial the same number of digits'' when using any carrier providing telephone exchange and exchange access service in the same area, Congress narrowed the dialing parity obligation in the final legislation to require only that calls between competing LECs be dialed without the use of an access code.[144] In response to Ameritech's proposed interpretation of the local dialing parity requirements, the Ohio Consumers' Counsel asserts that it does ''not believe that consumers would see any real functional difference between having to dial extra digits and having to dial an access code'' and, thus, urges that customers not be required to dial access codes or extra digits when using a competing provider's services.[145]

66. Ameritech also asks the Commission to clarify that ''the dialing parity obligation applies only to competing carriers that provide both telephone exchange service *and* telephone toll service (*i.e.*, competing LECs).'' [146] Finally, USTA urges the Commission to clarify that section 251(b)(3) does not include an obligation to provide dialing parity to CMRS providers.[147] USTA contends that the provision of dialing parity to CMRS providers by LECs would complicate implementation of ''sender pays'' arrangements that have been adopted in certain states if dialing parity were interpreted to preclude the use of extra digits and/or recorded announcements associated with a ''sender pays'' arrangement.[148] USTA expresses concern that customers may receive bills for calling CMRS customers without advance notice that they are going to be billed for such calls.[149]

c. Discussion

67. We adopt our tentative conclusion that, pursuant to section 251(b)(3), a LEC is required to permit telephone exchange service customers within a defined local calling area to dial the same number of digits to make a local telephone call, notwithstanding the identity of a customer's or the called party's local telephone service provider. As we stated in the *NPRM*, we believe that this interpretation of the dialing parity requirement as applied to the provision of telephone exchange service would best facilitate the introduction of competition in local markets by ensuring that customers of competitive service providers are not required to dial additional access codes or personal identification numbers in order to make local telephone calls. We disagree with Ameritech's view that Congress intended only to preclude the use of access codes and did not intend to preclude the dialing of extra digits. The fact that Congress ultimately adopted a dialing parity definition that precludes ''the use of any access code'' [150] does not constrain the Commission from precluding the dialing of extra digits, including access codes. Given that the statute does not define the term ''access code,'' we conclude that our interpretation of the local dialing parity requirement will avoid potential disputes concerning what is and what is not an ''access code.'' We are also persuaded by the argument advanced by the Ohio Consumers' Counsel that consumers would not perceive a functional difference between having to dial extra digits and having to dial an access code when using a competing provider's services.

68. We conclude that Ameritech's additional argument that the dialing parity obligation applies only to competing carriers that provide both telephone exchange service *and* telephone toll service, represents an impermissibly narrow reading of the statute. We find that the phrase ''providers of telephone exchange service and telephone toll service''

[139] 47 U.S.C. 251(f)(2).

[140] *NPRM* at para. 211.

[141] *Id.*

[142] *See, e.g.*, ALTS comments at 4; GTE comments at 8; Ohio Commission comments at 8.

[143] Ameritech comments at 3–4. Notwithstanding its interpretation of the local dialing parity requirements, Ameritech notes that it has exceeded these requirements by establishing interconnection arrangements that allow customers of competing LECs to complete calls by dialing the same number of digits. *Id.* at 4.

[144] *Id.*

[145] Ohio Consumers' Counsel reply at 2.

[146] Ameritech comments at 3 n.6 (emphasis in original).

[147] USTA comments at 5.

[148] *Id.* In this context, the term ''sender pays'' refers to an arrangement under which a customer who originates a call to a CMRS customer pays the cost of airtime for terminating the call. Under a sender pays arrangement, the customer typically receives information regarding the price of the call before the call is placed. Once the customer receives this information, the customer then may decide whether or not to complete the call. Sender pays arrangements are atypical insofar as it is the CMRS customer who generally pays the cost of airtime for terminating calls.

[149] *Id.*

[150] 47 U.S.C. 153(15).

imposes an obligation on LECs to provide dialing parity to providers of solely telephone exchange service, to providers of solely telephone toll service, or to providers of both telephone toll and exchange service. We believe that this interpretation is consistent with both the language of the statute and Congress' intent to encourage the entry of new competitors in both the local and toll markets.[151] We reject USTA's argument that the section 251(b)(3) dialing parity requirements do not include an obligation to provide dialing parity to CMRS providers.[152] To the extent that a CMRS provider offers telephone exchange service, such a provider is entitled to receive the benefits of local dialing parity. Regarding USTA's argument that applying section 251(b)(3) in a way that benefits CMRS providers could complicate implementation of sender pays arrangements in some states, we conclude that the record before us is insufficient to determine whether, or under what circumstances, sender pays arrangements, including those requiring the dialing of extra digits or recorded announcements, are consistent with the 1996 Act. Although we do not intend to preclude the states from lawfully enforcing legitimate consumer protection policies that do not have an anticompetitive impact, we cannot conclude on this record that the arrangements USTA describes would be permissible. Finally, given our expectation that local dialing parity will be achieved through LECs' compliance with other section 251 requirements, we do not adopt a timetable for implementing the local dialing parity requirements.

2. Local Dialing Parity Methodologies

a. Background and Comments

69. In the *NPRM*, we stated our expectation that the local dialing parity obligations would not be achieved through presubscription.[153] Rather, we anticipated that a customer's ability to select a telephone exchange service provider and make local telephone calls without dialing extra digits will be accomplished through the unbundling, number portability and interconnection requirements of section 251.[154] The *NPRM* sought information and comment as to how the local dialing parity requirement should be implemented.[155]

70. The parties generally agree that local dialing parity will be accomplished through implementation of the unbundling, number portability and interconnection requirements of section 251.[156] Parties add to this list the 1996 Act's equal access requirements.[157] A few parties contend that local dialing parity is assured once competing providers of telephone exchange service are permitted nondiscriminatory access to telephone numbers.[158]

b. Discussion

71. We anticipate that local dialing parity will be achieved upon implementation of the number portability and interconnection requirements of section 251. We also concur with the view that the ability of competing local exchange service providers to receive telephone numbers on a nondiscriminatory basis is critical to the achievement of local dialing parity. We believe that the interconnection requirements that section 251(c)(2) imposes on incumbent local exchange carriers will reduce the likelihood that customers of a competing LEC will have to dial an access code to reach a customer of the incumbent LEC insofar as the two networks are connected. Number portability will ensure that customers switching local service providers will not need to dial additional digits to make local telephone calls. Likewise, allowing every telecommunications carrier authorized to provide local telephone service, exchange access, or paging service in an area code to have at least one NXX in an existing area code also reduces the potential local dialing disparity that may result if competing LECs can only give customers numbers from a new area code. We therefore decline to prescribe now any additional guidelines addressing the methods that LECs may use to accomplish local dialing parity. We also conclude that, contrary to the views expressed by some parties, the provision of nondiscriminatory access to telephone numbers, by itself, does not fulfill the local dialing parity mandate of section 251(b)(3). Given that acquisition of a central office code by a LEC would not necessarily ensure that the LEC's customers would be relieved of an obligation to dial extra digits, access codes or some other special dialing protocol, the provision of nondiscriminatory access to telephone numbers does not by itself ensure local dialing parity. Rather, we find that under section 251(b)(3) each LEC must ensure that its customers within a defined local calling area be able to dial the same number of digits to make a local telephone call notwithstanding the identity of the calling party's or called party's local telephone service provider.

3. Non-Uniform Local Calling Areas

a. Background

72. The *NPRM* tentatively concluded that, pursuant to section 251(b)(3), a LEC is required to permit telephone exchange service customers within a defined local calling area to dial the same number of digits to make a local telephone call, notwithstanding the identity of a customer's or the called party's local telephone service provider.[159] The *NPRM* did not address the potential dialing parity implications of non-uniform local calling areas [160] nor did it address the potential impact of our proposed interpretation of the local dialing parity obligation on local calling area boundaries.[161]

b. Comments

73. A number of parties express concern about the potential interrelationship between our proposed interpretation of the local dialing parity requirements and local calling area boundaries.[162] For example, WinStar cautions the Commission that by requiring that customers ''within a defined local calling area'' be able to dial the same number of digits to make a local telephone call, certain parties may interpret this to require that a competing provider of local exchange service must define its local calling area

[151] As the U.S. Court of Appeals for the Fifth Circuit stated in *Peacock* v. *Lubbock Compress Company,* ''the word 'and' is not a word with a single meaning, for chameleonlike, it takes its color from its surroundings.'' The court held that ''[i]n the construction of statutes, it is the duty of the Court to ascertain the clear intention of the legislature. In order to do this, Courts are often compelled to construe 'or' as meaning 'and,' and again 'and' as meaning 'or'.'' *Peacock* v. *Lubbock Compress Company,* 252 F.2d 892, 893 (5th Cir. 1958) (*citing United States* v. *Fisk,* 70 U.S. 445, 448 (1865).

[152] *See* section X of the *First Report and Order* for a discussion of the applicability of section 251 to CMRS providers.

[153] *NPRM* at para. 207 n.284.

[154] *Id.*

[155] *NPRM* at paras. 209, 211.

[156] *See, e.g.,* SBC comments at 3 n.4; NEXTLINK comments at 8.

[157] *See, e.g.,* BellSouth comments at 9.

[158] *See, e.g.,* U S WEST comments at 6.

[159] *NPRM* at para. 211.

[160] We use the term ''non-uniform local calling area'' to refer to a situation in which a telephone exchange service provider's local calling area is either larger or smaller than that of another telephone exchange service provider that is providing telephone exchange service in the same geographic area.

[161] Insofar as parties contend that the section 251(b)(3) dialing parity requirements compel the use of a ten-digit dialing plan for local calls within an area code overlay (*see, e.g.,* MFS comments at 3–5), we note that these concerns are addressed more fully below in paragraphs 286 through 287.

[162] *See, e.g.,* WinStar comments at 10–11; GSA/DOD comments at 4–5; Florida Commission comments at 3.

to match the local calling area of the incumbent LEC.[163] GSA/DOD maintains that dialing is not truly at parity if different carriers have different definitions of the geographic areas in which calls can be made with seven-digit dialing.[164] To address the potential dialing parity issue that may arise when a new entrant's ''network coverage'' is more limited than the incumbent LEC's, GSA/DOD recommends that the Commission adopt rules that ensure that local calling areas are consistently defined for LEC wholesale and retail services.[165]

74. GTE contends that ''[s]o long as new entrants have the technical ability to deploy equipment necessary to offer the same seven-digit dialing as the incumbent LEC, dialing parity should be deemed to exist even if one or more of the new entrants ultimately chooses to provide ten-digit dialing.'' [166] To illustrate its point that all local calls cannot be dialed using the same number of digits, NYNEX notes that in the New York City Metro LATA local calls span three different area codes, with seven-digit dialing within an area code and ten-digit dialing between area codes.[167] Finally, the Florida Commission expresses concern regarding the potential customer confusion that may result if customers in local calling areas are required to dial ten rather than the currently dialed seven digits to make local ''Extended Calling Service'' calls.[168]

c. Discussion

75. A telephone call requiring seven-digit dialing is not necessarily a local call [169] and a telephone call requiring ten-digit dialing is not necessarily a toll call.[170] Disparity in local dialing plans, by itself, does not contravene our interpretation of the local dialing parity requirements unless such plans are anti-competitive in effect.[171] By requiring that all customers ''within a defined local calling area'' be able to dial the same number of digits to make a local telephone call, we do not intend to require a competing provider of local exchange service to define its local calling area to match the local calling area of an incumbent LEC. We further do not intend to require a competing provider of telephone exchange service that voluntarily chooses to provide ten-digit as opposed to seven-digit dialing in a local calling area to modify its dialing plan in this instance in order to conform to the dialing plan of another LEC. No other commenter addressed GSA's proposal that the Commission adopt rules that ensure that local calling areas are consistently defined for LEC wholesale and retail services. Therefore, we conclude that the record is insufficient to permit us to take such action at this time.

E. Consumer Notification and Carrier Selection Procedures

a. Background

76. Section 251(b)(3) does not specifically require that procedures be established to permit consumers to choose among competitive telecommunications providers (*e.g.*, through balloting).[172] The *NPRM* sought comment as to whether the Commission should require LECs to notify consumers about carrier selection procedures or impose any additional consumer education requirements.[173] We also sought comment on an alternative proposal that would make competitive telecommunications providers responsible for notifying customers about carrier choices and selection procedures through their own marketing efforts.[174]

b. Comments

77. Several parties contend that the responsibility for consumer education should be borne, at least in part, by the incumbent LECs [175] and claim that incumbent LECs are uniquely situated to assist in this function.[176] Conversely, others maintain that responsibility for the notification and education of consumers should be imposed on the carriers seeking those customers' business, as part of those carriers' marketing efforts.[177] GSA/DOD favors letting carriers ''fight it out among themselves,'' noting that carriers themselves will have every incentive to make sure that prospective customers are aware of their choices.[178] PacTel suggests that states are in the best position to assess the informational needs of their citizens.[179] Several commenters express concern that any customer notification requirement must recognize that the details of any such notification plan should reflect local circumstances, including local carrier selection options, rates and dialing plans.[180] Ameritech maintains that a ''carrier-neutral customer notification of the toll dialing parity selection processes is in the public interest and should be a part of the implementation of any toll dialing parity plan.'' [181]

78. While several commenters urge the Commission to adopt rules for balloting,[182] the majority of parties urge us to reject this option.[183] Parties that oppose balloting argue that such decisions should be left to the individual states [184] and claim that balloting is confusing to customers,[185] costly,[186] and forces consumers to make selections before they might otherwise choose to do so.[187] Commenters also argue that competition for customers will ensure that carriers notify customers as to how their services can be obtained.[188] In stating its opposition to a balloting requirement, MFS observes that:

[163] WinStar comments at 10–11 (''The Commission should proceed carefully to ensure that it does not inadvertently limit carriers from experimenting with local calling areas.''); *see also,* U S WEST comments at 6 (where dialing parity disputes arise over fact that local calling areas of two competing LECs do not match, states should resolve such disputes since they are familiar with local calling areas and calling patterns in that state).

[164] GSA/DOD comments at 4.

[165] *Id.* at 5.

[166] GTE comments at 8 n.10.

[167] NYNEX comments at 3 n.6.

[168] Florida Commission comments at 3.

[169] We note that several states permit seven-digit dialing for toll calls. *North American Numbering Plan, Area Codes 1996 Update*, Bellcore (January 1996) at 14. For example, within the 518 area code a call from Clifton Park, New York to Hague, New York is a toll call that can be dialed with seven digits.

[170] Section 3(48) defines ''telephone toll service'' as ''telephone service between stations in different exchange areas for which there is made a separate charge not included in contracts with subscribers for exchange service.'' 47 U.S.C. 153(48). By contrast, charges for calls within a local calling area generally are not assessed on a per call basis. Thus, the construct of local calling areas serves as the basis by which carriers price their services.

[171] *See, e.g.*, the discussion at paras. 281–291 regarding the discriminatory and anticompetitive nature of a service-specific or technology-specific overlay in connection with area code relief plans.

[172] 47 U.S.C. 251(b)(3).

[173] *NPRM* at para. 213.

[174] *Id.*

[175] *See, e.g.*, ACSI comments at 10; Ameritech comments at 20; California Commission comments at 4.

[176] *See, e.g.*, Illinois Commission comments at 67; ACSI comments at 10 (incumbent LECs should be required to provide bill inserts to customers alerting them to opportunity to select alternative service provider).

[177] *See, e.g.*, CBT comments at 5; Bell Atlantic comments at 5; Frontier comments at 4; BellSouth reply at 4; GTE reply at 15.

[178] GSA/DOD comments at 6.

[179] PacTel comments at 13.

[180] *See, e.g.*, Ameritech comments at 21; GTE comments at 12; PacTel reply at 13.

[181] Ameritech comments at 20.

[182] *See, e.g.*, NEXTLINK comments at 9; Excel comments at 7.

[183] *See, e.g.*, Ohio Consumers' Counsel comments at 3; SBC reply at 1; MFS reply at 12; CBT reply at 3–4.

[184] *See, e.g.*, Florida Commission comments at 2; PacTel reply at 13.

[185] *See, e.g.*, Ohio Commission comments at 7.

[186] *See, e.g.*, GTE comments at 13; Sprint comments at 4.

[187] Ameritech comments at 20.

[188] *See, e.g.*, GTE comments at 13; U S WEST comments at 8.

The long-distance market today differs markedly from the situation in the mid-1980's, when non-dominant carriers were virtually unknown to most consumers and balloting was mandated as a way of educating consumers to their ability to choose a carrier. No such education is needed today, because most consumers are well aware of their long-distance choices, and the carriers have readily available means of contacting those who are not.[189]

79. Commenters also raised a number of issues related to consumer notification and carrier selection methods. For example, PacTel asserts that ''the default carrier for both existing and new customers who do not actively choose an intraLATA toll provider should be the dial-tone provider.'' [190] Sprint agrees that ''existing customers who are currently obtaining intraLATA toll service from the dial tone provider, and do not indicate a desire to change carriers, should remain with that intraLATA toll provider.'' [191] Sprint rejects PacTel's proposal, however, ''to default new customers who do not choose an intraLATA toll provider to the dial tone provider.'' [192] Concerning whether customers should be assessed a ''PIC change charge'' when they select an alternative provider of telephone toll or telephone exchange service, parties propose allowing customers a ''grace period'' during which they could switch carriers without charge.[193] The Ohio Consumers' Counsel supports a cap on the cost of initiating both local and toll service with a new carrier, noting that a ''customer's old carrier should not be able to impose an 'exit fee' upon the customer who switches.'' [194] Finally, GVNW urges that the Commission's rules, complaint procedures and penalties for ''slamming'' be applied to any carrier selection procedures that the Commission adopts with respect to local exchange service providers.[195]

c. Discussion

80. We agree with those commenters who observe that competitive providers of telephone exchange and telephone toll service have an incentive to make consumers aware of the choices available, and we perceive no need to prescribe detailed consumer notification or carrier selection procedures at this time. We do believe, however, that states may adopt such procedures. The states are best positioned to determine the consumer education and carrier selection procedures that best meet the needs of consumers and telecommunications services providers in their states. Thus, states may adopt consumer education and carrier selection procedures that will enable consumers to select alternative carriers for their local and toll services. We further agree that a customer notification requirement should take into consideration local circumstances. The states may adopt balloting, consumer education and notification requirements for services originating within their states, that are not anti-competitive in effect. States also may adopt measures to prevent abuse of the customer notification and carrier selection processes. All such procedures, however, must be consistent with the guidelines set forth above with respect to the requisite categories of toll traffic for which consumers must be entitled to presubscribe and the toll presubscription method that we require carriers to implement. We note that the consumer notification requirements already imposed by states' intrastate, intraLATA toll dialing parity orders have required LECs to inform customers either once or twice of their opportunity to choose an alternative carrier.[196] We anticipate that any subsequently imposed consumer notification requirements would be no more be burdensome, and, in particular, would not require more than two notifications to consumers of their opportunity to choose alternative carriers to transport their intraLATA toll calls.

81. We conclude that ''dial-tone providers'' should not be permitted automatically to assign to themselves new customers who do not affirmatively choose a toll provider. New customers of a telephone exchange service provider who fail affirmatively to select a provider of telephone toll service, after being given a reasonable opportunity to do so, should not be assigned automatically to the customer's dial-tone provider or the customer's preselected interLATA toll or interstate toll carrier. Rather, we find that consistent with current practices in the interLATA toll market, such nonselecting customers should dial a carrier access code to route their intraLATA toll or intrastate toll calls to the carrier of their choice until they make a permanent, affirmative selection. This action eliminates the possibility that a LEC could designate itself automatically as a new customer's intraLATA or intrastate toll carrier without notifying the customer of the existence of alternative carrier choices. Finally, notwithstanding our decision to entrust the issues of consumer notification and carrier selection to the states, we emphasize that all telecommunications carriers remain subject to the requirements of section 258 as well as any verification or ''anti-slamming'' [197] procedures that the Commission may adopt to prevent unauthorized changes in a customer's selection of a provider of telephone exchange or telephone toll service.[198]

F. Cost Recovery

a. Background

82. In the *NPRM*, the Commission noted that the 1996 Act does not specify how LECs will recover the costs associated with providing dialing parity to competing providers.[199] The Commission therefore sought comment on: (1) What, if any, standard should be used for arbitration to determine the dialing parity implementation costs that LECs should be permitted to recover; and (2) how those costs should be recovered.[200]

b. Comments

83. At the outset, we note that there does not appear to be a consensus among commenters as to either of the

[189] MFS comments at 6.

[190] PacTel comments at 11.

[191] Sprint reply at 5–6 n.8.

[192] *Id.* On a related issue, AT&T urges the Commission to intercede where abuse of the customer notification process occurs, such as when a LEC uses its ''provision of exchange service to influence toll PIC choices.'' AT&T comments at 6 n.9. AT&T adds that the Commission should prohibit LECs from extending interLATA PIC ''freezes'' to intraLATA traffic. *Id.*

[193] Ohio Commission comments at 7 (proposing 90 day grace period with a charge for subsequent changes); Citizens Utilities comments at 6–7 (proposing 6 month grace period).

[194] Ohio Consumers' Counsel reply at 2.

[195] GVNW comments at 7.

[196] *See, e.g., Adoption of rules relating to intra-Market Service Area presubscription and changes in dialing arrangements related to the implementation of such presubscription,* Interim Order (Ill. Comm. Comm'n. Apr. 7, 1995).

[197] The Commission has defined slamming as the unauthorized conversion of a customer's interexchange carrier by another interexchange carrier, an interexchange resale carrier, or a subcontractor telemarketer. *Cherry Communications, Inc. Consent Decree,* 9 FCC Rcd 2986, 2987 (1994).

[198] Section 258 makes it unlawful for any telecommunications carrier to ''submit or execute a change in a subscriber's selection of a provider of telephone exchange service or telephone toll service except in accordance with such verification procedures as the Commission shall prescribe.'' 47 U.S.C. 258(a). The section further provides that:

[a]ny telecommunications carrier that violates the verification procedures described in subsection (a) and that collects charges for telephone exchange service or telephone toll service from a subscriber shall be liable to the carrier previously selected by the subscriber in an amount equal to all charges paid by such subscriber after such violation.

47 U.S.C. 258(b). Section 258 extends the slamming prohibition to all telecommunications carriers, not just interexchange carriers, as is the case under the Commission's current Part 64 rules. *See* 47 CFR § 64.1100.

[199] *NPRM* at para. 219.

[200] *Id.*

two cost recovery issues raised in the *NPRM*. The parties are generally divided into two positions: (1) Interexchange carriers and competitive carriers prefer a Commission standard under which carriers could recover from competing providers only the specific incremental costs of providing intraLATA toll dialing parity; and (2) incumbent LECs and several states prefer that no national standards be developed, and that cost recovery issues be left either to the states or to intercarrier negotiations.

84. AT&T suggests that carriers only be entitled to recover incremental costs directly associated with the implementation of dialing parity, and states that the Commission should ''explicitly exclude (a) recovery of costs intended to reimburse an incumbent carrier for revenues it expects to lose as a result of implementing dialing parity * * * as well as (b) costs associated with network upgrades that are not necessary to implement dialing parity.'' [201] AT&T further suggests that the Commission mandate an ''Equal Access Recovery Charge'' on all providers of toll service based on minutes of use subject to dialing parity, and that this charge be tariffed separately from any access charges, approved by the state commission, and amortized over a period not to exceed eight years.[202]

85. MCI appears to agree with AT&T's proposal, stating that ''incremental costs incurred to implement dialing parity should be recovered from all carriers that carry intraLATA toll on a presubscribed basis in accordance with cost causative principles.'' [203] MCI also suggests that dialing parity costs be recovered on a minutes-of-use basis, as an addition to the local switching rate element, which would be separately identified in a tariff, and that Commission rules for cost recovery be ''presumptively correct'' (*i.e.*, states can depart from such rules if they can show their mechanism is more effective).[204] Several parties urge the Commission to draw upon its cost recovery paradigms for interLATA equal access, and apply the same basic principles to the intraLATA toll market.[205]

86. Many other competitive providers also advocate various forms of incremental cost recovery, on a per-minutes of use basis, to be assessed against all providers of presubscribed intraLATA toll services; such costs could include, for example, hardware costs, software costs, and consumer education costs.[206] GSA/DOD asks the Commission to ''view LEC claims for large cost compensation with considerable skepticism,'' and suggests that the Commission ''distribute any verifiable incremental costs associated with achieving dialing parity as a percentage surcharge on the bills of all carriers, including the incumbent LECs.'' [207]

87. Taking the opposite view, BOC commenters, together with GTE and USTA, argue that there is essentially no need for the Commission to adopt cost recovery measures for dialing parity, and that cost recovery issues are best left for the states to address.[208] Several state public utility commissions also argue that, given the state-specific nature of intraLATA cost recovery issues, and the omission of a specific cost-recovery standard from Congress in section 251(b)(3), the individual states are in the best position to address these issues.[209] In support of these arguments, some state commenters have provided the Commission with detailed descriptions of their current mechanisms for recovering intraLATA presubscription costs.[210]

88. Ameritech argues that dialing parity costs ''should be recovered under normal regulatory principles from the cost-causer,'' and Bell Atlantic argues that ''only carriers who will benefit from intraLATA presubscription should pay the costs. Unless interexchange carriers bear the full costs of implementing intraLATA presubscription, exchange carrier customers who do not switch intraLATA toll carriers and do not benefit from presubscription would ultimately be required to pay for it.'' [211] On the other extreme, the Telecommunications Resellers Association states that incumbent LECs should ''shoulder the full financial burden of remedying this competitive imbalance [in the intraLATA toll market].'' [212]

89. The reply comments reveal substantial disagreement among carriers from the two opposing positions. Interexchange carriers and competitive carriers reject the suggestion that they shoulder the full cost burden for intraLATA dialing parity, and urge that, at a minimum, costs be spread among all service providers that enjoy dialing parity.[213] AT&T states that ''the proposal by Ameritech and Bell Atlantic to recover implementation costs exclusively from their competitors underscores the need for explicit national rules * * * [n]othing could be more * * * harmful to competition, than allowing incumbent LECs to charge a fee for new entrants for the ''privilege'' of competing with them.'' [214] GSA/DOD also urges the Commission to ''reject'' the proposals of Bell Atlantic and SBC.[215] MFS correctly notes that there was ''little consensus'' on this issue, and states ''it is entirely inappropriate in a competitive environment that an individual carrier's costs be recovered from its competitors.'' [216] The Ohio Consumer's Counsel states that Ameritech's ''cost-causer'' proposal ''ignores the fact that the benefits of dialing parity are network-wide.'' [217]

90. Incumbent LECs maintain that the Commission should not set national cost recovery standards, and that this matter remains the prerogative of the states.[218] GTE ''strongly opposes'' AT&T's suggestions, and PacTel states that ''LECs cost recovery should not be limited by noncompensatory incremental methodologies or unreasonably long amortization requirements.'' [219] SBC asserts that the proposals of MCI and AT&T are ''examples of regulatory micro-management, are inconsistent with Congressional intent, and would also * * * place the major burden of dialing parity cost recovery squarely on the backs of incumbent LECs.'' [220]

91. GCI states that ''costs should be recovered in a competitively neutral manner because all LECs, not just incumbent LECs, must meet this obligation.'' [221] Western Alliance contends that ''costs incurred to achieve dialing parity should be included in the investment recoverable through explicit

[201] AT&T comments at 7.

[202] *Id.*

[203] MCI comments at 3.

[204] *Id.* at 7–8.

[205] *See*, e.g., GVNW comments at 8; MCI comments at 7.

[206] *See, e.g.*, Citizens Utilities comments at 6; GSA/DOD comments at 6–8.

[207] GSA/DOD comments at 6–7, 8.

[208] *See* Bell Atlantic comments at 5; GTE comments at 20–21; NYNEX comments at 10–11; PacTel comments at 17; SBC comments at 9; USTA comments at 4.

[209] *See* Illinois Commission comments at 72; Indiana Commission comments at 9; Ohio Consumers' Counsel comments at 4; and Ohio Commission comments at 11.

[210] *Id.; see also* Louisiana Commission comments at 7.

[211] Ameritech comments at 10; Bell Atlantic comments at 5.

[212] Telecommunications Resellers Association comments at 8.

[213] *See, e.g.*, Sprint reply at 12; Telecommunications Resellers Association reply at 7; WinStar reply at 12.

[214] AT&T reply at *iii.*

[215] GSA/DOD reply at 8.

[216] MFS reply at 14.

[217] Ohio Consumers' Counsel reply at 4.

[218] *See* Bell South reply at 4; Bell Atlantic reply at 5; NYNEX reply at 4; PacTel reply at 18; and USTA reply at 5.

[219] PacTel reply at *iii.*

[220] SBC reply at 8.

[221] GCI reply at 2.

universal (service) supports.'' [222] Finally, NECA argues that there is no need for the Commission to prescribe specific cost recovery mechanisms.[223]

c. Discussion

92. We conclude that, in order to ensure that dialing parity is implemented in a pro-competitive manner, national rules are needed for the recovery of dialing parity costs. We further conclude that these costs should be recovered in the same manner as the costs of interim number portability, as mandated in our recent *Number Portability Order*.[224] Our authority to promulgate national cost recovery rules derives from section 251(d) of the 1996 Act and section 4(i) of the 1934 Act. In section 251(d), Congress directed the Commission to take the necessary steps to implement section 251. Section 4(i) of the 1934 Act authorizes us to take any action we consider ''necessary and proper'' to further the public interest in the regulation of telecommunications. Because we determine that dialing parity is crucial to the development of local exchange competition, we conclude that we should establish pricing principles for the recovery of dialing parity costs. Accordingly, we reject the arguments of incumbent LECs and others who oppose national standards for cost recovery of the network upgrades required to achieve dialing parity.

93. Many of the network upgrades necessary to achieve dialing parity, such as switch software upgrades, are similar to those required for number portability. Moreover, with both dialing parity and number portability, customer inconvenience represents the barrier to effective competition Congress intends to eliminate, whether that inconvenience results from the dialing of extra digits in the case of dialing parity, or notification of family, friends and business contacts when a customer is forced to change his or her number. For these reasons, we determine that our recent *Number Portability Order* provides guidance regarding which costs incumbent LECs should be able to recover in implementing dialing parity, as well as how such costs should be recovered. The rules adopted in the *Number Portability Order* apply only to currently-available number portability mechanisms. We sought further comment on cost recovery for long-term number portability, because long-term number portability will involve a different kind of system than currently available solutions. We tentatively concluded that under section 251(e)(2), the same cost recovery principles should apply to long-term number portability. In the case of dialing parity, there is a similar distinction between currently-available solutions (*i.e.*, full 2-PIC presubscription), and long-term solutions (*i.e.*, multi-PIC or smart-PIC methodologies). Like number portability, we may need to revisit the issue of an appropriate cost recovery standard once other presubscription technologies become available on a nationwide basis.

94. In the *Number Portability Order*, we concluded that costs for number portability should be recovered on a competitively-neutral basis.[225] We also concluded that any recovery mechanism should: (1) Not give one service provider an appreciable, incremental cost advantage over another service provider, when competing for a specific subscriber; and (2) not have a disparate effect on the ability of competing service providers to earn a normal return.[226] We therefore reject the arguments of those commenters that assert that only new entrants should bear the costs of implementing dialing parity, because such an approach would not be competitively neutral. We also concluded in the *Number Portability Order* that LECs could only recover the incremental costs of implementing number portability. Because we determine that number portability and dialing parity share significant technical similarities and overcome similar barriers to competition, we conclude that we should impose the same cost standard for dialing parity costs that we have adopted for number portability costs. We therefore agree with AT&T that LECs may not recover from other carriers under a dialing parity cost recovery mechanism any network upgrade costs not related to the provision of dialing parity.

95. In our *Number Portability Order*, we concluded that the costs of long-term number portability that could be recovered through a competitively-neutral mechanism included installation of number portability-specific switch software, implementation of SS7 and IN or AIN capability, and the construction of number portability databases.[227] We determined that states could use several allocators, including gross telecommunications revenues, number of lines, and number of active telephone numbers, to spread number portability costs across all telecommunications carriers.[228] Applying the same cost recovery principles to dialing parity, we conclude that LECs may recover the incremental costs of dialing parity-specific switch software, any necessary hardware and signalling system upgrades, and consumer education costs that are strictly necessary to implement dialing parity. These costs must be recovered from all providers of telephone exchange service and telephone toll service in the area served by a LEC, including that LEC, using a competitively-neutral allocator established by the state.[229] Although, under section 251(e)(2), number portability costs must be recovered from all telecommunications carriers, section 251(b)(3) only requires that dialing parity be provided to providers of telephone exchange service and telephone toll service. Therefore, we conclude that a competitively-neutral recovery mechanism for dialing parity should only allocate costs to this more limited class. States may use any of the allocators described in the *Number Portability Order*, or any other allocator that meets the criteria we have established. States should apply the principles we adopt today, and the other guidelines for recovering costs of currently available number portability measures, in establishing more specific cost recovery requirements for dialing parity.

G. Unreasonable Dialing Delays

96. For a discussion of the section 251(b)(3) prohibition on unreasonable dialing delays, as that section applies to the provision of local and toll dialing parity, see section III(E) below.

III. Nondiscriminatory Access Provisions

A. Definition of the Term ''Nondiscriminatory Access''

1. Background

97. Section 251(b)(3) requires all LECs to permit ''nondiscriminatory access'' to

[222] Western Alliance reply at 2 n.6.

[223] NECA reply at 2.

[224] *Telephone Number Portability*, CC Docket No. 95–116, FCC 96–286 (July 2, 1996) (*Number Portability Order*) 61 FR 38605 (July 25, 1996).

[225] Section 251(e)(2) of the 1996 Act states that ''the cost of establishing * * * number portability shall be born by all telecommunications carriers on a competitively neutral basis, as determined by the Commission.'' This statutory provision does not apply to the dialing parity requirement.

[226] *Number Portability Order* at paras. 121–140.

[227] *Id.* at para. 122.

[228] *Id.* at paras. 134–36.

[229] We recognize that, unlike the case for number portability costs, states would not be able to establish a cost allocator based on numbers of lines because such an allocator could not apportion costs on a competitively neutral basis where dialing parity is provided to a CMRS provider. We expect that states will establish a competitively neutral allocator that can be used to apportion costs among all providers.

telephone numbers, operator services, directory assistance, and directory listings to competing providers of telephone exchange service, and to competing providers of telephone toll service.[230] In the *NPRM*, we tentatively concluded that ''nondiscriminatory access'' requires each LEC to permit the same degree of access that the LEC itself receives for the services specified in section 251(b)(3).[231] The Commission also asked for specific comment on whether the nondiscriminatory access provisions of section 251(b)(3) also impose a duty on LECs to resell operator and directory assistance services to competing providers.[232]

2. Comments

98. A number of commenters concur that, as proposed in the *NPRM*, ''nondiscriminatory access'' should require each LEC to permit the same access to these services that the LEC itself receives.[233] Bell Atlantic argues, however, that access need not be strictly equal, but must ''simply be of a type that will permit the other carrier to provide comparable services with no difference in quality perceptible to callers.'' [234] Bell Atlantic cites the Modification of Final Judgment (MFJ) for the proposition that ''equal access'' does not require ''strict technical equality of services and facilities,'' but rather it requires that consumers should perceive no qualitative differences.[235] Sprint objects to Bell Atlantic's use of ''customer perception'' as the nondiscriminatory access standard, arguing that this standard would allow the incumbent LEC to ''discriminate against its competitors in ways not visible to the end user.'' [236]

99. Ameritech requests a clarification that a LEC's duty under section 251(b)(3) is owed only to ''providers of telephone exchange and telephone toll service.'' [237] Ameritech also argues that because Congress did not expressly impose a strict equality standard in section 251(b)(3), as it did in section 251(c)(2)(C) for incumbent LECs, ''the only logical interpretation is that LECs are required to provide access * * * that is nondiscriminatory among carriers.'' [238] The Ohio Consumer's Counsel responds that ''Ameritech is claiming that giving all other carriers an equal level of *degraded* access, i.e., inferior to that provided to itself, is 'non-discriminatory.' Surely Congress contemplated nothing of the sort, as is recognized even by other incumbent LECs.'' [239]

100. As for resale, a number of commenters agree that LECs should make operator and directory assistance services available for resale to competing providers under section 251(b)(3), in order to further nondiscriminatory access to such services.[240] On the other hand, several commenters contend that this provision does not imply any resale requirements.[241] AT&T argues that resale is not required under section 251(b)(3), because ''to the extent that a local exchange carrier provides transmission with, or as part of, its operator services, the service must be made available for resale under sections 251(b)(1) and 251(c)(4) of the Act.'' [242] Bell Atlantic takes a similar approach, arguing that, to the extent that a LEC provides operator and directory assistance services that are ''telecommunication services,'' the service must be made available for resale by LECs under section 251(b)(1), and, if the services are telecommunication services offered to retail customers, incumbent LECs must offer them for resale at wholesale prices under section 251(c)(4).[243]

3. Discussion

101. We conclude that the term ''nondiscriminatory access'' means that a LEC that provides telephone numbers, operator services, directory assistance, and/or directory listings (''providing LEC'') [244] must permit competing providers to have access to those services that is at least equal in quality to the access that the LEC provides to itself. We conclude that ''nondiscriminatory access,'' as used in section 251(b)(3), encompasses both: (1) Nondiscrimination between and among carriers in rates, terms and conditions of access; and (2) the ability of competing providers to obtain access that is at least equal in quality to that of the providing LEC.[245] LECs owe the duty to permit nondiscriminatory access to competing providers of telephone exchange service and to providers of telephone toll service, as the plain language of the statute requires. Such competing providers may include, for example, other LECs, small business entities entering the market as resellers, or CMRS providers.

102. Section 251(b)(3) requires that each LEC, to the extent that it provides telephone numbers, operator services, directory assistance, and/or directory listings for its customers, must permit competing providers *nondiscriminatory* access to these services.[246] Any standard that would allow a LEC to permit access that is inferior to the quality of access enjoyed by that LEC itself is not consistent with Congress' goal to establish a pro-competitive policy framework.

103. We are not persuaded by Bell Atlantic's statement that the standard for nondiscriminatory access should focus *only* upon ''customer perceptions'' of service quality. Such a standard overlooks the potential for a providing LEC to subject its competitors to discriminatory treatment in ways that are not visible to the customer, such as the imposition of disparate conditions between similarly-situated carriers on the pricing and ordering of services covered by section 251(b)(3). While invisible to the customer, such conditions can severely diminish a competitor's ability to provide exchange and/or toll service on the same terms as the LEC permitting the access.

104. The *MTS and WATS Order (III)* does not preclude us from requiring LECs to permit access that is at least equal in quality to the access the LEC itself receives.[247] In the *MTS and WATS Order (III)*, the Commission simply held that neither ''absolute technical equality'' nor an ''overly quantitative and microscopic'' definition of equal

[230] 47 U.S.C. 251(b)(3).

[231] *See NPRM* at para. 214.

[232] *See NPRM* at paras. 216, 217.

[233] *See, e.g.,* AT&T reply at iii–iv; ACSI comments at 9; California Commission comments at 5; Excel comments at 8; Florida Commission comments at 5; MCI comments at 2; and Telecommunications Resellers Association comments at 5.

[234] *See* Bell Atlantic comments at n.11.

[235] *Id.* at 6, *citing United States v. Western Electric Co.,* 569 F. Supp. 1057, 1063 (D.D.C. 1983). Bell Atlantic also states that the Commission followed this approach in a 1985 ''equal access'' order. *Id.* at 11, *citing In the Matter of MTS and WATS Market Structure (Phase III),* Report and Order, CC Docket No. 78–72, 100 F.C.C. 2d. 860, 877 (1985) (*MTS and WATS Order (III)*).

[236] Sprint reply at 9–10.

[237] Ameritech comments at 11.

[238] *Id.* at 12–13. Section 251(c)(2)(C) imposes a duty on incumbent LECs to provide interconnection that is ''at least equal in quality to that provided by the local exchange carrier to itself or to any subsidiary, affiliate, or any other party to which the carrier provides interconnection.'' 47 U.S.C. 251(c)(2)(C).

[239] Ohio Consumers' Counsel reply at 3.

[240] *See, e.g.,* ALTS comments at n.4; MCI reply at 3; MFS reply at 10; and Telecommunications Resellers Association comments at *ii.*

[241] *See, e.g.,* GTE comments at 16; Ameritech comments at n.16; NYNEX comments at 6–7.

[242] AT&T comments at n.13.

[243] Bell Atlantic comments at 8.

[244] We use the term ''providing LEC'' throughout this section to refer to the LEC that is permitting nondiscriminatory access to its services pursuant to section 251(b)(3). The term ''competing provider'' refers to a provider of telephone exchange service or a provider of telephone toll service that seeks nondiscriminatory access from a providing LEC.

[245] *See also* corresponding definition of ''nondiscriminatory'' in the *First Report and Order* at section V for the purposes of section 251(c)(2).

[246] *See also First Report and Order* at section V.

[247] *MTS and WATS Order (III),* 100 F.C.C. 2d at 860. *See also supra* n. 234.

access was desirable.[248] We find that the nondiscrimination standard established in this *Order* is consistent with those previous decisions. We do not set forth in this *Order* an overly technical definition of nondiscriminatory access.

105. We conclude that, to the extent all or part of any operator or directory assistance services, and features that are adjunct to such services, are not ''telecommunications services'' within the meaning of section 3(44)[249] of the Communications Act of 1934, LECs that provide such services must nonetheless make the services and features available under section 251(b)(3). We recognize that resale of operator services and directory assistance is a primary vehicle through which competing providers, especially new entrants and small business entities, can make operator services or directory assistance available to their customers and that providing LECs are a primary source from which competing providers can obtain these services.[250] Operator and directory assistance services, or the portions of such services, that are ''telecommunications services'' are already subject to resale requirements under: (1) Section 251(c)(4)(A), which requires incumbent LECs ''to offer for resale at wholesale rates any telecommunications service that the carrier provides at retail to subscribers who are not telecommunications carriers''; and (2) section 251(b)(1), which imposes a duty on all LECs not to prohibit the resale of their telecommunications services, nor to impose unreasonable or discriminatory conditions on the resale of such services.[251] Operator and directory assistance services, however, generally use various adjunct information features, *e.g.*, rating tables or customer information databases.[252] We recognize that without access to such information features, competing providers cannot make full use of such services. Thus, to ensure that competing providers can obtain nondiscriminatory access to operator services and directory assistance, we require LECs to make such services available to competing providers in *their entirety*.[253]

B. Nondiscriminatory Access to Telephone Numbers

1. Definition

106. Currently, the largest LEC in each area code serves as the Central Office (CO) code administrator for that area. In the *NPRM*, this Commission proposed that the term ''nondiscriminatory access to telephone numbers'' means that all LECs providing telephone numbers must permit access to telephone numbers to competing providers in the same manner that the LECs themselves receive such access.[254] The few commenters who addressed this issue support the extension of our general definition of nondiscriminatory access to cover access to telephone numbers.[255] We conclude, consistent with the general definition of nondiscriminatory access in para. 101, *supra*, that the term ''nondiscriminatory access to telephone numbers'' requires a LEC providing telephone numbers to permit competing providers access to these numbers that is identical to the access that the LEC provides to itself. In addition, as discussed in paras. 261–345, *infra*, the delegation of the administration of numbering resources to a neutral administrator will further the statutory objective that all competing providers receive nondiscriminatory access to telephone numbers.

2. Commission Action To Enforce Access to Telephone Numbers

107. In the *NPRM*, we sought comment on what, if any, Commission action is necessary or desirable to implement the requirement under section 251(b)(3) that LECs permit nondiscriminatory access to telephone numbers.[256] Many commenters state that no additional Commission actions, beyond those already required by section 251(e), are necessary.[257] We conclude that issues regarding access to telephone numbers will be addressed by our implementation of section 251(e) herein.[258]

C. Nondiscriminatory Access to Operator Services

1. Definition of ''Operator Services''

a. Background and Comments

108. The 1996 Act does not define the term ''operator services.'' In the *NPRM*, the Commission proposed to use the definition of ''operator services'' in the Telephone Operator Consumer Services Improvement Act (TOCSIA) of 1990.[259] Section 226(a)(7), which was added to the 1934 Act by TOCSIA, defines operator services as: ''any automatic or live assistance to a consumer to arrange for billing or completion, or both, of a telephone call through a method other than: (1) Automatic completion with billing to the telephone from which the call originated; or (2) completion through an access code by the consumer, with billing of an account previously established with the telecommunications service provider by the consumer.''[260]

109. Bell Atlantic, BellSouth and MCI agree with the proposed definition of ''operator services.''[261] AT&T, however, expresses concern that this definition should not be used by incumbent LECs to claim that they are then not obligated to make operator services, including transmission of information, available for resale at wholesale rates, pursuant to section 251(c)(4).[262] AT&T thus suggests that the Commission adopt the definition as proposed in the *NPRM*, but explicitly state that the definition is applicable only in the context of section 251(b)(3).[263] AT&T asserts that the traditional functions of ''emergency interrupt,'' ''busy line verification,'' and ''operator-assisted directory assistance''

[248] *MTS and WATS Order (III)*, 100 F.C.C. 2d at 877.

[249] 47 U.S.C. 153(44).

[250] *See also infra* para. 118, for discussion of the unbundling of operator services and directory assistance under section 251(c)(3).

[251] 47 U.S.C. 251(b)(1), (c)(4)(A). Operator services and directory assistance are also unbundled network elements subject to section 251(c)(3). *See First Report and Order* at section V. The 1934 Act, as amended, defines ''telecommunications service'' as ''the offering of telecommunications for a fee directly to the public, or to such classes of users as to be effectively available directly to the public, regardless of the facilities used.'' 47 U.S.C. 153(46). ''Telecommunications'' is defined as ''the transmission, between or among points specified by the user, of information of the user's choosing, without change in the form or content of the information as sent and received.'' 47 U.S.C. 153(43). ''Information service'' is defined as ''the offering of a capability for generating, acquiring, storing, transforming, processing, retrieving, utilizing, or making available information, via telecommunications * * *.'' 47 U.S.C. 153(20). *See also First Report and Order* at section V.

[252] ''Rating tables'' are databases that cross-reference area codes, numbers called, and time of day to determine the price to be charged for telephone calls. Directory assistance may use databases that contain customer names, numbers and addresses, and operator services may use databases that contain customer billing information (*e.g.*, whether a customer will accept collect calls or third party billing).

[253] *See infra* paras. 108–151, for further discussion of operator services and directory assistance.

[254] *See NPRM* at para. 215.

[255] *See, e.g.*, Telecommunications Resellers Association reply at 5. *See supra* para. 101, for the general definition of ''nondiscriminatory access.''

[256] *NPRM* at para. 215.

[257] *See, e.g.*, Bell Atlantic comments at 6; CBT comments at 6; and U S WEST comments at 8. *See generally infra* paras. 261–308, for a discussion of previous Commission actions in the area of number administration.

[258] *See generally infra* paras. 261–345.

[259] 47 U.S.C. 226(a)(7); *see NPRM* at para. 294.

[260] *NPRM* at para. 216.

[261] *See, e.g.*, Bell Atlantic comments at 8; BellSouth comments at n.24; and MCI comments at 8.

[262] *See* AT&T comments at 8. 47 U.S.C. 251(c)(4), *inter alia*, requires incumbent LECs to offer for resale, at wholesale rates, any telecommunications service that the carrier provides at retail to subscribers who are not telecommunications carriers.

[263] *Id.*

are within the meaning of ''operator services'' in this context.[264]

b. Discussion

110. TOCSIA defines operator services to be ''any automatic or live assistance to a consumer to arrange for billing or completion, or both, of a telephone call through a method other than: (1) Automatic completion with billing to the telephone from which the call originated; or (2) completion through an access code by the consumer, with billing of an account previously established with the telecommunications service provider by the consumer.'' [265] Based on support in the record and the desirability of having a definition consistent with that in the preexisting statute, we conclude that we should adopt the definition of operator services as used in TOCSIA for purposes of section 251(b)(3), with modifications. For purposes of section 251(b)(3), we do not exempt (1) and (2), above, from the definition of operator services. Accordingly, the term operator services, for purposes of section 251(b)(3), means ''any automatic or live assistance to a consumer to arrange for billing or completion, or both, of a telephone call.'' Although commenters did not focus on this issue, nor suggest that the exemptions be deleted from the TOCSIA definition of ''operator services,'' we conclude that we should adopt a modified definition of operator services for the purpose of implementing section 251(b)(3). When enacted, the TOCSIA definition was intended to address services from an aggregator location, rather than addressing the types of operator services in general that would be essential to competition in telecommunications markets. Operator services are becoming increasingly automated, and thus excluding access to automatic call completion from the obligations imposed by section 251(b)(3) could deny competitors access to a service that is essential to competition in the local exchange market. We conclude that, for the same reason, ''completion by an access code by the consumer,'' a common means of completing calls made from payphones, should also be included in the definition of operator services for section 251(b)(3).

111. Adopting a national definition of ''operator services'' based on the TOCSIA definition, as modified above, will allow for consistency and ease of compliance with the statute, specifically with respect to services to which all LECs must permit nondiscriminatory access.[266] We further conclude that we should state explicitly that busy line verification, emergency interrupt, and operator-assisted directory assistance are forms of ''operator services,'' because they assist customers in arranging for the billing or completion (or both) of a telephone call. Thus, if a LEC provides these functions, the LEC must offer them on a nondiscriminatory basis to all providers of telephone exchange and/or toll service. To avoid confusion with the TOCSIA definition at section 226, we state here that this definition *only* applies for purposes of section 251. Finally, unlike the definition of operator services in TOCSIA, we point out that our definition of ''operator services'' under section 251(b)(3) is applicable to both *interstate* and *intrastate* operator services.[267]

2. Definition of ''Nondiscriminatory Access to Operator Services''

a. Background

112. In the *NPRM,* we proposed that the phrase ''nondiscriminatory access to operator services'' should be interpreted to mean that a telephone service customer, regardless of the identity of his or her local telephone service provider, must be able to connect to a local operator by dialing ''0,'' or ''0 plus'' the desired telephone number.[268]

b. Comments

113. Several commenters agree with the Commission's interpretation of this phrase as proposed in the *NPRM.*[269] PacTel, however, requests that we clarify that the ''0'' or ''0 plus'' requirement does not mean ''that a customer must be able to access *every* LEC's operator services or directory assistance using the same dialing scheme, but rather only the services of the carrier selected to provide local service.'' [270] AT&T requests that operator service connection methods continue to include dialing ''00'' in order to access the pre-selected long distance carrier operator.[271] CBT asks that we find that the nondiscriminatory access requirements only apply when a competing local service provider is using either a LEC's local exchange services on a resale basis or when the competing provider is using a LEC's unbundled switch ports.[272] GCI states that, in Alaska, LECs currently do not provide ''0'' or ''0 plus'' the telephone number; rather, interexchange carriers provide these services. GCI requests that arrangements such as those in Alaska not be precluded.[273] Bell Atlantic, USTA, and PacTel request that we state that, while LECs must offer their operator services to their competitors, there is no duty for a LEC to ensure that the competitors' customers have access to these services.[274] Finally, U S WEST states that ''regulatory agencies should not mandate all carriers provide certain adjunct non-essential services, including ''0'' and ''0+'' services. Nor should regulatory agencies dictate the manner in which adjunct, non-essential services are accessed.'' [275]

c. Discussion

114. We adopt the interpretation of ''nondiscriminatory access to operator services'' that we proposed in the *NPRM,* with the following clarifications. First, LECs are required to permit nondiscriminatory access to operator services by competing providers, and have no duty, apart from factors within their own control, to ensure that a competing provider's customers can in fact access the services. We make this clarification because the statute does not refer to the *customers* of competing providers, and the record does not support such an interpretation of the statutory language. Second, there is no requirement that a LEC must provide call handling methods or different credit card or other alternate billing arrangements different from those it provides to itself or its affiliates. And finally, we find that the duty to permit nondiscriminatory access to operator services applies only to LECs that provide operator services to their own customers.

115. Once a LEC permits a competing provider to have access to operator services, this access may become degraded in the competing provider's network by factors outside the control of the providing LEC.[276] On the other hand, when a LEC unbundles network loop elements, the providing LEC may also retain maintenance and control responsibilities over such elements.[277]

[264] *Id.* at n. 11.

[265] 47 U.S.C. 226(a)(7).

[266] *See also infra* para. 146.

[267] *See First Report and Order* at section V for discussion of application of section 251 to interstate and intrastate matters.

[268] *See NPRM* at para. 216.

[269] *See, e.g.,* AT&T comments at 9; MCI comments at 8; and Telecommunications Resellers Association comments at 6.

[270] *See* PacTel comments at 16.

[271] *See* AT&T comments at 9.

[272] *See* CBT comments at 6, 7.

[273] *See* GCI reply at 3 n.4.

[274] *See* Bell Atlantic comments at 7; USTA comments at *ii;* PacTel comments at 15.

[275] U S WEST comments at 8–9.

[276] For example, the customers of a competing provider may experience dialing delays or call blockage due to inadequate facilities or poor call management in the competing provider's network.

[277] We note that incumbent LECs have an obligation to offer operator services and directory

Continued

We require that, if a dispute arises between a LEC providing access to operator services and a competing provider regarding the delivery of such access, the initial burden is upon the providing LEC to demonstrate with specificity: (1) That it has provided nondiscriminatory access, and (2) that the degradation of access is not caused by factors within the control of the providing LEC. Our use of the term ''factors'' is not limited to network facilities, but also includes human and non-facilities elements used in the provision of operator services. A providing LEC must also demonstrate with specificity that any degradation in access by competing providers is not caused by, *inter alia*, the providing LEC's inadequate staffing, poor maintenance or cumbersome ordering procedures.

116. We take into account PacTel's comments in concluding that the nondiscriminatory access requirement of section 251(b)(3) does not require that a customer be able to access *every* LEC's operator services, but only the operator services offered by that customer's chosen local service provider.[278] Furthermore, section 251(b)(3) neither specifically addresses nor precludes arrangements wherein operator services are provided by interexchange carriers, as described by GCI. Section 251(b)(3) requires all LECs, but not interexchange carriers or other service providers, to permit nondiscriminatory access to operator services. Thus, to the extent that an OSP is not within the statutory definition of ''local exchange carrier,'' it is not required by section 251(b)(3) to permit nondiscriminatory access to its operator services.

117. The ''00'' access method currently allows an end user to connect to the operator services of his or her presubscribed long distance carrier. Consistent with our definition of nondiscriminatory access, we require that, if a LEC allows its customers access to operator services of their presubscribed long distance carriers by dialing ''00,'' it must permit competing providers to have access to any features and functions that are necessary to enable the competing provider to allow its customers likewise to obtain access to such operator services by dialing ''00.'' We find that CBT's proposal to limit a LEC's operator services obligations to only those competitors reselling a LEC's services, or using a LEC's unbundled switch ports, is inconsistent with the statute. The nondiscriminatory access provisions of section 251(b)(3) are not confined to situations in which a competing provider resells a LEC's services, or uses unbundled network elements of a LEC. We do not agree with U S WEST's statement that it would be inappropriate to mandate that all LECs who offer operator services must accommodate ''0'' and ''0 plus'' dialing. This service is not, as U S WEST states, an ''adjunct, non-essential'' service.

118. Finally, we note that in the *First Report and Order* we found that operator services as well as directory assistance are network elements that an incumbent LEC must make available to requesting telecommunications carriers. In the absence of an agreement between the parties, unbundled element rates for operator services and directory assistance are governed by section 252(d)(1) and our rules thereunder.[279] The obligation of incumbent LECs to provide operator services and directory assistance as unbundled elements is in addition to the duties of all LECs (including incumbent LECs) under section 251(b)(3) and the rules we adopt herein.[280]

3. Commission Action To Ensure Nondiscriminatory Access to Operator Services

a. Background and Comments

In the *NPRM*, the Commission sought comment on what, if any, Commission action is necessary or desirable to ensure nondiscriminatory access to operator services under section 251(b)(3).[281] Bell Atlantic, GTE and PacTel assert that there is no need for the Commission to adopt detailed rules in this area.[282] On the other hand, Sprint is ''concerned that leaving access to these services to carrier negotiations will result in unreasonable delays and discriminatory terms and conditions as between the incumbent LEC and CLEC.'' [283] MFS and WinStar support an ''unambiguous national policy'' of requiring incumbent LECs to make services available to new entrants.[284] MFS justifies this position by noting ''some incumbent LECs say they already provide access, some say they are not obligated to offer such offering for resale, some assert that they are included in various unbundled elements or that they should not be unbundled * * * incumbent LECs should not be allowed to unilaterally decide whether, or to what extent to offer access to operator services, directory assistance and directory listings.'' [285]

120. The Telecommunications Resellers Association states that ''[p]rompt and strong Commission response to complaints alleging failures by LECs to provide nondiscriminatory access to operator services is required to ensure compliance with this requirement.'' [286] Finally, the Florida Commission asserts that ''[s]tates should be allowed to ensure compliance with the Act as it relates to these services as defined in the *NPRM*.'' [287]

b. Discussion

121. We conclude that detailed Commission rules are not required to implement the requirement under section 251(b)(3) that LECs must permit competing providers nondiscriminatory access to operator services. We recognize the need for flexibility in order for maximum access to operator services when networks interconnect, as there may be a variety of technical interconnection methods through which such nondiscriminatory access to operator services can be achieved. We view the definition of ''nondiscriminatory access to operator services'' set forth in paras. 114–118, *supra*, as the overarching standard to which LECs must adhere under section 251(b)(3). As noted, in part III (C)(2), once a LEC permits nondiscriminatory access to operator services to its competitors, that LEC has no further duty to ensure that the competitor's customers can access those services. To the extent that a dispute arises regarding a competing provider's access to operator services, however, the burden is on the LEC permitting the access to demonstrate with specificity that it has provided nondiscriminatory access, and that any disparity is not caused by factors within its control.

122. Beyond placing the initial burden of proof on the providing LEC, we find that specific enforcement standards for nondiscriminatory access to operator services are not required at this time. Rather, disputes concerning nondiscriminatory access can be addressed under our general

assistance on an unbundled basis under section 251(c)(3). 47 U.S.C. 251(c)(3). *See First Report and Order* section V.

[278] The operator services provided by a customer's local service provider, for example, could be that provider's own operator services, resold operator services of a LEC providing nondiscriminatory access, or operator services provided by an independent OSP.

[279] *See First Report and Order* at section V.

[280] *See First Report and Order* at section V.

[281] *See NPRM* at para. 216.

[282] *See* Bell Atlantic comments at 6; GTE reply at 18; and PacTel comments at 14.

[283] Sprint reply at 8.

[284] MFS reply at 10, WinStar reply at 13.

[285] MFS reply at 10.

[286] Telecommunications Resellers Association comments at 7.

[287] *See* Florida Commission comments at 5.

enforcement authority pursuant to Titles II and V of the Act.[288] The 1996 Act also directs the Commission to establish such procedures as are necessary for the review and resolution of complaints against the BOCs within the statutory deadlines.[289] This requirement will be addressed in a separate proceeding.

4. ''Branding'' Requirements for Operator Services

a. Background

123. Section 226(b)(1)(A) of the Act and Part 64 of the Commission's rules require an operator services provider (OSP) to identify itself audibly and distinctly to the consumer at the beginning of each interstate telephone call, before the consumer incurs any charge for that call.[290] This procedure is commonly referred to as ''call branding.'' In a recent *Report and Order*, the Commission amended its rules to require ''branding'' to the parties on both ends of a collect call.[291]

124. In using the term ''branding requirements'' in this context, we do not refer to the section 226 requirements obligating OSPs to identify themselves to consumers; rather, we refer to the obligations beyond section 226, if any, of a LEC to a competing provider that is using the LEC's facilities to provide its own operator services, or is reselling the operator services of the LEC. In these situations, the issue is *whose brand* should be used.

125. The *NPRM* did not ask whether branding of operator services should be required under section 251(b)(3). This issue was raised by several parties, however, in the context of nondiscriminatory access to such services. Specifically, parties raised the question of whether competing providers have the right to have resold operator services of a LEC ''branded'' in the competing provider's name, in order to ensure nondiscriminatory access and consumer perceptions of seamless service.

b. Comments

126. AT&T states that the Commission should reject claims that LECs may refuse to comply with ''reasonable requests to brand resold operator services as those of the reseller,'' and that the ''continued use of the incumbent LEC's own brand with services that are resold to CLEC customers would stifle competition and confuse customers.'' [292] AT&T further recommends that ''equal opportunities for branding'' be made available, asserting that if a LEC brands its own operator services, it should ensure that other OSPs have the capability to do the same; and if branding is infeasible for the OSP, the LEC should not brand its service at all.[293] Bell Atlantic and SBC object to AT&T's proposal, because one possible outcome would be that branding would not be performed on interstate calls, which would violate current Federal and state statutes and regulations.[294]

127. USTA states that when there are no technical limitations to branding, each LEC should be responsible for branding its own services, and where multiple brands are infeasible, the branding announcement of the facilities-based carrier should be used by ''default.'' [295] Bell Atlantic and CBT contend that the issue of branding operator services is best left to inter-carrier negotiations, where technical and cost issues can be resolved between the parties.[296] PacTel notes that ''in a resale environment, we accommodate the CLEC by not branding our service at all. If a CLEC wants to brand its own operator services, it can establish a facilities-based arrangement and set up its own operator services.'' [297]

c. Discussion

128. Since these comments are a logical outgrowth of the language in our *NPRM*, we address them herein. We recognize that branding plays a significant role in markets where competing providers are reselling the operator services of the providing LEC. Continued use of the providing LEC's brand with a competing provider's customers clearly advantages the providing LEC. Consistent with the requirements that we imposed on incumbent LECs in the *First Report and Order*, we conclude that a providing LEC's failure to comply with the reasonable, technically feasible request of a competing provider for the providing LEC to rebrand operator services in the competing provider's name, or to remove the providing LEC's brand name, creates a presumption that the providing LEC is unlawfully restricting access to these services by competing providers.[298] This presumption can be rebutted by the providing LEC if it demonstrates that it lacks the capability to comply with the competing provider's request. We note also that the Illinois Commission recently ordered rebranding of operator services as those of the reseller ''[t]o the extent that it is technically feasible,'' and we do not preempt its intrastate branding requirements, nor any similar requirements that other states may have enacted.[299]

129. Any inter-carrier branding arrangements under which an interstate operator services call made from an aggregator location would not be branded would violate section 226 of the Act and part 64 of our rules. We therefore caution interconnecting carriers that, in negotiating branding arrangements for operator services, they must insure that such arrangements are consistent with Federal laws and regulations requiring interstate OSPs to identify themselves.

D. Nondiscriminatory Access to Directory Assistance and Directory Listings

1. Definition of ''Nondiscriminatory Access to Directory Assistance and Directory Listings''

a. Background

130. In the *NPRM*, the Commission interpreted the phrase ''nondiscriminatory access to directory assistance and directory listings'' to mean that the customers of all telecommunications service providers should be able to access each LEC's directory assistance service and obtain a directory listing on a nondiscriminatory basis, notwithstanding: (1) The identity of a requesting customer's local telephone service provider; or (2) the identity of the telephone service provider for a customer whose directory listing is requested.[300]

b. Comments

131. A number of commenters agree with our definition of ''nondiscriminatory access to directory assistance and directory listings'' as

[288] *See, e.g.*, 47 U.S.C. 208 (common carrier complaint authority); *see generally* 47 U.S.C. 501–510. *See also, First Report and Order* at section II (authority to take enforcement action).

[289] *See* 47 U.S.C. 271(d)(6)(B).

[290] *See* 47 U.S.C. 226(b)(1)(A); *see also* 47 CFR 64.703(a)(1).

[291] *Amendment of Policies and Rules Concerning Operator Service Providers and Call Aggregators*, CC Docket No. 94–158, Report and Order and Further Notice of Proposed Rulemaking, FCC 96–75 (1996) (*OSP Order*) 61 FR 15020 (April 4, 1996).

[292] AT&T reply at n.20.

[293] *See* AT&T comments at n.12.

[294] *See* Bell Atlantic reply at 5–6; SBC reply at 7.

[295] *See* USTA reply at 6.

[296] *See* Bell Atlantic reply at 5; CBT reply at 4–5.

[297] PacTel reply at 15.

[298] *See First Report and Order* at section VIII .

[299] *See* AT&T Communications of Illinois, and LDDS Communications, Inc. d/b/a LDDS Metromedia Communications, Petition for a Total Local Exchange Wholesale Service Tariff from Illinois Bell Telephone Company d/b/a Ameritech Illinois and Central Telephone Company Pursuant to Section 13.505.5 of the Illinois Public Utilities Act, Illinois Commission, Dockets 95–0458 and 95–0531 (consol.), Hearing Examiner's Proposed Order, May 16, 1996, pp. 52–54.

[300] *See NPRM* at para. 217.

proposed in the *NPRM*.[301] Many commenters combine their discussions of what constitutes nondiscriminatory access for both operator services and directory assistance.[302] As with operator services, some commenters assert that a LEC is not obligated to ensure that a competing provider's customers have access to directory assistance and directory listings.[303] Bell Atlantic, for example, argues that ''[t]he exchange carrier, naturally, can control only its part of the service, not what the other carrier provides.'' [304] CBT asks that we find that the nondiscriminatory access requirements only apply when a competing local service provider is using a LEC's local exchange services on a resale basis or when the competing provider is using a LEC's unbundled switch ports.[305]

132. Finally, certain interexchange carriers ask that we require that competing providers have access to the White Pages, Yellow Pages, and ''customer guide'' sections of directories, in order to satisfy the requirement of nondiscriminatory access to directory assistance and directory listings.[306] Sprint contends that ''CLECs should be allowed to insert informational pages containing their business and repair numbers in the incumbent LEC's white and yellow pages directories at cost.'' [307] SBC strongly disagrees that section 251(b)(3) requires access to Yellow Pages, ''customer guides,'' and informational pages, pointing out that the ''competitive checklist'' (section 271) provisions only require incumbent LECs to provide access to White Pages listings.[308]

c. Discussion

133. We conclude that we should adopt the definition of nondiscriminatory access to directory assistance services proposed in the *NPRM*, with the following modifications. Consistent with our conclusion in para. 101, *supra*, we have modified this definition to reflect that this duty is owed to competing providers of telephone exchange service and/or telephone toll service, and not to ''all telecommunications carriers.'' [309] This duty does not apply if a LEC chooses not to offer directory assistance to its own customers.[310]

134. We agree that once a LEC permits a competitor nondiscriminatory access to directory assistance and directory listings, the LEC permitting the access is not responsible for ensuring that the competitor's customers are able to access these services. As with operator services, when a dispute arises as to the adequacy of the access received by the competitor's customers, the burden is on the LEC permitting access to the service to demonstrate with specificity: (1) That it is permitting nondiscriminatory access to directory assistance and directory listings; and (2) that the disparity in access is not caused by factors within its control. As in paragraph 114, *supra*, we conclude that the term ''factors'' is not confined to physical facilities, but also includes human and non-facilities elements such as staffing, maintenance and ordering.

135. The requirements for nondiscriminatory access to directory assistance and directory listings are intertwined. Requiring ''nondiscriminatory access to directory listings'' means that, if a competing provider offers directory assistance, any customer of that competing provider should be able to access any listed number on a nondiscriminatory basis, notwithstanding the identity of the customer's local service provider, or the identity of the telephone service provider for the customer whose directory listing is requested.[311] We conclude that the obligation to permit access to directory assistance and directory listings does not require LECs to permit access to unlisted telephone numbers, or other information that a LEC's customer has specifically asked the LEC not to make available.[312] In previous orders, such as those addressing nondiscriminatory access by interexchange carriers to Billing Name and Address (BNA) information, we have taken action to ensure that customer privacy is protected.[313] In this *Order*, we require that in permitting access to directory assistance, LECs bear the burden of ensuring that access is permitted only to the same information that is available to their own directory assistance customers, and that the inadvertent release of unlisted names or numbers does not occur.[314]

136. We find, as we did in paragraph 117, *supra*, that CBT's proposal to limit the application of section 251(b)(3) to competing providers of exchange and/or toll service who are providing services on a resale basis, or using an incumbent LEC's unbundled switch ports is unacceptable. We also take into account PacTel's comments in concluding that section 251(b)(3) does not require that a customer be able to access any LEC's directory assistance services, but only those services provided through its chosen service provider. When a customer contacts his or her provider's directory assistance services, the customer's provider can obtain access to the directory listings of other carriers; thus, the customer should be able to obtain any directory listing (other than listings that are protected or not available, such as unlisted numbers). We conclude, however, that a LEC that does not provide directory assistance to its own customers does not have to provide nondiscriminatory access to directory assistance to competing providers.

137. On the basis of the record before us, we conclude that there is no need for this Commission to state that the term ''directory assistance and directory listings'' includes the White Pages, Yellow Pages, ''customer guides,'' and informational pages. As a minimum standard, we find that the term ''directory listing'' as used in section 251(b)(3) is synonymous with the definition of ''subscriber list information'' in section 222(f)(3).[315]

---

[301] *See, e.g.*, AT&T comments at 9–10; SBC reply at 4; and Telecommunications Resellers Association comments at 7.

[302] *See, e.g.*, CBT comments at 6. *See, e.g.*, para. 113, *supra*.

[303] *See* Ameritech comments at 10, USTA comments at 6–7. *See also supra* para. 113.

[304] Bell Atlantic comments at 7.

[305] *See* CBT comments at 6, 7.

[306] *See, e.g.*, AT&T comments at n.14.

[307] Sprint comments at 9–10.

[308] *See* SBC reply at 6–7 (citing 47 U.S.C. § 271(c)(2)(B)(vii)).

[309] *See supra* para. 101.

[310] *But see infra* paras. 141–145, wherein we require all LECs, regardless of whether or not they provide directory assistance to their customers, to share subscriber listings, in readily accessible formats, as an element of nondiscriminatory access.

[311] *See infra* para. 141.

[312] *Cf.* 47 U.S.C. 222(f)(3) (definition of ''subscriber list information''), which is limited to *the listed names* of subscribers of a carrier.

[313] *See, e.g., Policies and Rules Concerning Local Exchange Carrier Validation and Billing Information for Joint Use Calling Cards*, CC Docket No. 91–115, Third Order on Reconsideration, 11 FCC Rcd 6835 (1996) 61 FR 08879 (March 6, 1996); *see also Policies and Rules Concerning Local Exchange Carrier Validation and Billing Information for Joint Use Calling Cards*, CC Docket No. 91–115, Second Report and Order, 8 FCC Rcd 4478 (1993) 58 FR 36143 (July 6, 1993).

[314] *See also Implementation of the Telecommunications Act of 1996: Telecommunications Carriers' Use of Customer Proprietary Network Information and Other Customer Information*, CC Docket No. 96–115, FCC 96–221 (1996) 61 FR 26483 (May 28, 1996).

[315] The term ''subscriber list information'' at section 222(f)(3) means any information: (A) Identifying the listed names of subscribers of a carrier and such subscribers' telephone numbers, addresses, or primary advertising classifications (as such classifications are assigned at the time of the establishment of such service), or any combination of such listed names, numbers, addresses or classifications; and (B) that the carrier or an affiliate has published, caused to be published, or accepted for publication in any directory format. 47 U.S.C. 222(f)(3) (A), (B).

2. Commission Action To Implement Nondiscriminatory Access to Directory Assistance and Directory Listings

a. Background and Comments

138. In the *NPRM*, the Commission sought comment on what action, if any, is necessary or desirable to implement the nondiscriminatory access to directory assistance and directory listings requirements of section 251(b)(3).[316] Several parties assert that there is no need for the Commission to adopt detailed rules addressing this issue.[317] In its comments, NYNEX described its current arrangements for making its directory assistance and directory listing services available to facilities-based and non-facilities-based carriers.[318]

139.Sprint and MFS urge the Commission to establish national rules requiring nondiscriminatory access to directory assistance and directory listings for all local service providers.[319] Furthermore, MCI recommends that the Commission establish requirements that ensure that ''each provider of local service has access to directory listings of other providers, and that these directory listings are made available in readily usable format,'' and that these listings be provided ''via tape or other electronic means, as is frequently the practice today between incumbent LECs whose service areas join.'' [320] PacTel and GTE urge the Commission to refrain from mandating access to underlying directory assistance databases.[321] GTE cites ''serious technical and security concerns,'' while PacTel argues that (1) the plain language of section 251(b)(3) does not require access to the underlying databases, and (2) LECs are prohibited from disseminating certain directory listing information without customers' permission in California and Nevada.[322] PacTel maintains that the intent of section 251(b)(3) is not to permit ''unfettered access to all information on record.'' [323]

140. The Telecommunications Resellers Association states that ''prompt and strong'' Commission action is required to ensure compliance with nondiscriminatory access to directory assistance and directory listings.[324] The Florida Commission asserts that ''[s]tates should be allowed to ensure compliance with the Act as it relates to these services as defined in the *NPRM*.'' [325]

b. Discussion

141. We conclude that section 251(b)(3) requires LECs to share subscriber listing information with their competitors, in ''readily accessible'' tape or electronic formats, and that such data be provided in a timely fashion upon request. The purpose of requiring ''readily accessible'' formats is to ensure that no LEC, either inadvertently or intentionally, provides subscriber listings in formats that would require the receiving carrier to expend significant resources to enter the information into its systems. We agree with MCI that ''by requiring the exchange of directory listings, the Commission will foster competition in the directory services market and foster new and enhanced services in the voice and electronic directory services market.'' [326] Consistent with the definition of ''subscriber list information'' in section 222(f)(3), we do not require access to unlisted names or numbers.[327] Rather, we require the LEC providing the listing to share listings in a format that is consistent with what that LEC provides in its own directory.

142. We conclude that the fact that many LECs offer directory assistance and listings for purchase or resale to competitors, as NYNEX describes, does not obviate the need for any requirements in this area. Under the general definition of ''nondiscriminatory access,'' competing providers must be able to obtain at least the same quality of access to these services that a LEC itself enjoys. Merely offering directory assistance and directory listing services for resale or purchase would not, in and of itself, satisfy this requirement, if the LEC, for example, only permits a ''degraded'' level of access to directory assistance and directory listings.[328]

143. We further find that a highly effective way to accomplish nondiscriminatory access to directory assistance, apart from resale, is to allow competing providers to obtain read-only access to the directory assistance databases of the LEC providing access. Access to such databases will promote seamless access to directory assistance in a competitive local exchange market. We note also that incumbent LECs must provide more robust access to databases as unbundled network elements under section 251(c)(3).[329]

144. We do not agree with PacTel's contention that certain state laws restricting the types of information that LECs can disseminate preclude us from requiring access to directory assistance databases. It is not possible to achieve seamless and nondiscriminatory access to directory assistance without requiring access to the underlying databases. Consistent with our definition of nondiscriminatory access, the providing LEC must offer its competitors access of at least equal quality to that it receives itself. Competitors who access such LEC databases will be held to the same standards as the database owner, in terms of the types of information that they can legally release to directory assistance callers. The LEC that owns the database can take the necessary safeguards to protect the integrity of its database and any proprietary information, or carriers can agree that such databases will be administered by a third party. We note also that our holding does not preclude states from continuing to limit how LECs can use accessed directory information, *e.g.*, prohibiting the sale of customer information to telemarketers.[330] Rather, we conclude only that section 251(b)(3) precludes states from discriminating among LECs by imposing different access restrictions on competing providers, thereby allowing certain LECs to enjoy greater access to information than others.[331] Accordingly, states may not impose rules that would

[316] *See NPRM* at para. 217.

[317] *See, e.g.*, Bell Atlantic comments at 6; GTE reply at 18; PacTel comments at 16.

[318] *See* NYNEX comments at 7–8.

[319] *See, e.g.*, MFS reply at 10; Sprint reply at 8.

[320] *See* MCI comments at 3, 9; *see also* MCI reply at 3.

[321] *See* GTE reply at 19; PacTel reply at 15.

[322] *See* GTE reply at 19; PacTel reply at 15.

[323] PacTel reply at 15.

[324] *See* Telecommunications Resellers Association comments at 7.

[325] *See* Florida Commission comments at 5.

[326] MCI comments at 9.

[327] *See* 47 U.S.C. 222(f)(3) for the definition of ''subscriber list information.''

[328] *See supra* paras. 101–105.

[329] *See supra* para. 118, for a discussion of the relationship between section 251(b)(3) and the requirements adopted in the *First Report and Order* mandating unbundled access to operator and directory assistance services.

[330] *But see* section 222(d)(3), which permits customer information to be used for telemarketing to the customer ''* * * for the duration of the call, if such call was initiated by the customer and the customer approves of the use of such information to provide such service.'' 47 U.S.C. 222(d)(3). *See also* our proceeding to clarify the obligations of carriers with regard to section 222(c) and 222(d). *Implementation of the Telecommunications Act of 1996: Telecommunications Carriers' Use of Customer Proprietary Network Information and other Customer Information*, CC Docket, No. 96–115, FCC 96–221 (May 17, 1996) 61 FR 26483 (May 28, 1996).

[331] *Cf.* 47 U.S.C. 222(e), which requires telephone exchange service providers to ''provide subscriber list information gathered in its capacity as a provider of such service on a timely and unbundled basis, under nondiscriminatory and reasonable rates, terms, and conditions, to any person upon request for the purpose of publishing directories in any format.'' *See* 47 U.S.C. 222(f)(3) for the definition of ''subscriber list information.''

allow a LEC to discriminate against competing providers.[332]

145. We are not adopting specific enforcement standards at this time. Disputes regarding nondiscriminatory access will be addressed under our Title II and Title V enforcement authority.[333]

3. Branding of Directory Assistance

a. Background and Comments

146. To the extent that interstate directory assistance services are within the definition of ''operator services'' in section 226(a)(7) of the Act,[334] the service provider is required to identify itself to consumers at the beginning of a call.[335] Parties raised the issue of whether the competing provider has the right to have resold directory assistance services of the LEC ''branded'' in its name, as an element of nondiscriminatory access under section 251(b)(3). Thus this issue is similar to that of branding of operator services in paras. 123–129, *supra.* The *NPRM* did not ask whether the branding of directory assistance should be required under 251(b)(3) but commenters raised this issue.

147. AT&T suggests adding a requirement that if an incumbent LEC brands its own directory services, the incumbent should ensure that other directory assistance service providers can also brand their services.[336] CBT argues that branding is impractical and should be left to intercarrier negotiations, stating that ''call branding can be provided, though not without considerable added effort and expense, to facilities-based providers who route traffic from their networks to the incumbent LEC's network by trunk group. Providing branding for resold services at the line number level is extremely difficult within the limits of the public switched network. When dealing with multiple resellers, there is no simple method for the incumbent LEC to determine by individual line number which brand should be applied.'' [337] Bell Atlantic also suggests that this issue be left to carrier negotiations.[338]

b. Discussion

148. The record shows that this issue is a logical outgrowth of the issues related to nondiscriminatory access to directory assistance raised in the *NPRM* and thus should be addressed in this *Order.* As with operator services, we recognize the major role that branding can play in an environment where competing providers are reselling the directory assistance services of the providing LEC. Consistent with the requirements that we imposed on incumbent LECs in the *First Report and Order,* therefore, we conclude that a providing LEC's failure to comply with the reasonable, technically feasible request of a competing provider for the providing LEC to rebrand directory assistance services in the competing provider's name, or to remove the providing LEC's brand name, creates a presumption that the providing LEC is unlawfully restricting access to these services by competing providers.[339] This presumption can be rebutted by the providing LEC demonstrating that it lacks the capability to comply with the request of the competing provider.[340] Finally, as with operator services, we do not preempt any branding requirements that state commissions may have enacted for directory assistance services.

4. Alternative Dialing Arrangements for Directory Assistance

a. Background and Comments

149. In the *NPRM,* the Commission sought comment on whether the customers of competing providers of exchange and/or toll service would be able to access directory assistance by dialing '411' or '555–1212,' which are nationally-recognized numbers for directory assistance, or whether alternative dialing arrangements would be necessary.

150. No commenters recommended that we require different arrangements for dialing directory assistance. AT&T states that while alternative protocols may be permitted, no carrier should be required to use them.[341] Bell Atlantic states that ''[n]o dialing arrangements for directory assistance other than 411 and 555–1212 are necessary. A facilities-based provider will be able to use these numbers and route its customers' calls in whatever way it chooses (to its own directory assistance, to that of the incumbent exchange carrier or to that or any other provider). When a non-facilities-based provider buys exchange service from the incumbent under section 251(c)(4), its customers get exactly what the incumbent's receive, 411 and 555–1212 access to directory assistance.'' [342]

b. Discussion

151. With respect to the ability of customers to reach directory assistance services through 411 or 555–1212 arrangements, we conclude that no Commission action is required now. No commenter has proposed that we require an alternative dialing arrangement. The record before us indicates that permitting nondiscriminatory access to 411 and 555–1212 dialing arrangements is technically feasible, and there is no evidence in the record that these dialing arrangements will cease.

E. Unreasonable Dialing Delay

1. Definition and Appropriate Measurement Methods

a. Background and Comments

152. Section 251(b)(3) prohibits unreasonable dialing delays.[343] The *NPRM* sought comment on what constitutes an unreasonable dialing delay for purposes of section 251(b)(3) and on appropriate methods for measuring and recording such delay.[344]

153. U S WEST contends that the phrase ''unreasonable dialing delay,'' as it appears in section 251(b)(3), applies only to the provision of nondiscriminatory access to operator and directory assistance services.[345] GCI, on the other hand, asserts that the unreasonable dialing delay provision applies to both the dialing parity and nondiscriminatory access provisions of section 251(b)(3).[346] MFS, NYNEX and Sprint recommend that we define ''dialing delay'' to cover the period from when a user completes dialing to when the call is ''handed off'' to a connecting LEC, whenever multiple LECs are involved in call completion.[347] ALTS, however, suggests that we define ''dialing delay'' to cover the period from when the end user completes dialing to the point where a network response is first received.[348]

154. Several parties contend, however, that we should not adopt a

[332] *See First Report and Order* at section II for a discussion of the applicability of our section 251 rules to intrastate and interstate services.

[333] *See supra* para. 122. *See also* 47 U.S.C. 208 (common carrier complaint authority) and 47 U.S.C. 501–510.

[334] 47 U.S.C. 226(a)(7).

[335] *See* 47 U.S.C. 226(a)(7), (b)(1). *See generally supra* paras. 123–129.

[336] *See* AT&T comments at n.12.

[337] CBT reply at 5.

[338] *See* Bell Atlantic reply at 5.

[339] As with operator services, *supra,* we note that carriers must comply with the branding requirements of section 226, to the extent that their services are within the section 226 definitions. *See* 47 U.S.C. 226.

[340] *See First Report and Order* at section VIII.

[341] *See* AT&T comments at 10.

[342] Bell Atlantic comments at 8–9.

[343] 47 U.S.C. § 251(b)(3).

[344] *See NPRM* at para. 218.

[345] U S WEST comments at 11.

[346] GCI reply at 2.

[347] *See* Sprint comments at 10; MFS reply at 8; NYNEX comments at 9.

[348] ALTS comments at 6.

definition of ''dialing delay.''[349] Bell Atlantic states that there is ''no need to try to develop a definition of what constitutes 'unreasonable dialing delays.' To the extent that this ever becomes an issue, it is best handled with a specific factual record.''[350]

155. Several parties recommend defining ''unreasonable'' as any delay that exceeds that of the providing LEC.[351] ACSI suggests that the Commission ''declare a delay 'unreasonable' if the average access time for competing providers exceeds the average access time for the LEC itself,'' and that ''* * * the LEC and competing providers should get equal priority in LEC call processing systems, which would result in identical dialing delays, on average, for LECs and competing providers.''[352] Other parties argue that LECs should not be held responsible for unreasonable dialing delays that are not caused by their networks or are not within their control.[353]

b. Discussion

156. We conclude that section 251(b)(3) prohibits ''unreasonable dialing delays'' for local and toll dialing parity, and for nondiscriminatory access to operator services and directory assistance. The reference to ''unreasonable dialing delay'' is ambiguous because it is in a prepositional phrase at the end of section 251(b)(3), following references both to the duty to provide dialing parity and the duty to permit nondiscriminatory access to telephone numbers, operator services, directory assistance, and directory listings. In light of this ambiguity, and the absence of legislative history, we look to the purpose of section 251 and to the record to interpret the ''unreasonable dialing delay'' provision. Examining the statutory language in light of the plainly pro-competitive thrust of these section 251 requirements, we conclude that Congress intended the dialing delay prohibition to apply to both the obligation to provide dialing parity and the obligation to permit nondiscriminatory access to operator services and directory assistance.[354] Further, commenters did not distinguish between dialing delay in dialing parity and nondiscriminatory access contexts.

157. We conclude that a ''comparative'' standard for identifying ''unreasonable dialing delay'' is necessary in order to ensure that, when competing providers obtain dialing parity and nondiscriminatory access to operator services and directory assistance, such access does not come with unreasonable dialing delays. We conclude, therefore, that the dialing delay experienced by the customers of a competing provider should not be greater than that experienced by customers of the LEC providing dialing parity, or nondiscriminatory access, for identical calls or call types. For the reasons stated below, we conclude that this ''comparative standard'' is more appropriate in this context than a specific technical standard.[355]

158. In our *Number Portability Order*,[356] we indicated that ''at a minimum, when a customer switches carriers, that customer must not experience a greater dialing delay or call set up time * * * due to number portability, compared to when the customer was with the original carrier.''[357] The standard that we are adopting for ''unreasonable dialing delay'' under section 251(b)(3) is consistent with the standard we adopted in the *Number Portability Order.*

159. We conclude that the statutory language on unreasonable dialing delays places a duty upon LECs providing dialing parity or nondiscriminatory access to operator services and directory assistance to process all calls from competing providers, including calls to the LEC's operator services and directory assistance, on an equal basis as calls originating from customers of the providing LEC. In other words, calls from a competing provider must receive treatment in the providing LEC's network that is equal in quality to the treatment the LEC provides to calls from its own customers. We recognize that LECs may have the technical ability to identify whether a call is originating from a competing provider (*e.g.*, by cross-referencing the Automatic Number Identification (ANI), or by identifying the connecting trunk group). Thus there may exist on the part of the providing LEC the ability to discriminate and to degrade service quality for a competing provider's customers by introducing unreasonable dialing delays.

160. For operator services and directory assistance calls, such dialing delay can be measured by identifying the time a call spends in queue until the providing LEC processes the call. We recognize that the time of arrival of a telephone call can be recorded (1) at the originating LEC's switch; (2) upon entering the operator services or directory assistance queue; and (3) at the time of answering by the providing LEC's operators for such services. We believe that it is possible to compare the treatment of calls placed by customers of the competing provider with those of calls originating from the providing LEC's customers, and thus determine if unreasonable dialing delays are occurring. Such a comparison would hold all LECs responsible only for delays within their control.

161. In the event that a dispute arises between a competing provider and a providing LEC as to dialing delay, we conclude that the burden is on the providing LEC to demonstrate with specificity that it has processed the call on terms equal to that of similar calls originating from its own customers. Such ''terms'' include the amount of time a providing LEC takes to process incoming calls, the priority a LEC assigns to calls, and might also take into account the number of calls abandoned by the caller of the competing provider. Furthermore, to the extent that states have adopted specific performance standards for dialing delay between competing providers, we do not preempt such standards, and states may enact more detailed standards.

162. We do not believe that measuring ''unreasonable dialing delay'' from the period beginning when a caller completes dialing a call and ending when the call is delivered (or ''handed off'') by the LEC to another service provider is practical with respect to dialing parity or nondiscriminatory access. While we understand that such a measurement can be made, and is fully within the control of one LEC, prohibiting a providing LEC from introducing dialing delay in the originating segment of calls under its control benefits only the customers of the providing LEC. The providing LEC already has sufficient motivation to provide efficient service to its own customers. Finally, we conclude that the proposal to measure dialing delay from the completion of dialing to a network response (*e.g.*, when a caller receives busy-tone signalling information from the called line) is unsatisfactory, because it fails to isolate the segments of a call within an individual LEC's control.

[349] *See, e.g.*, Bell Atlantic comments at 9, U S WEST comments at 11.

[350] Bell Atlantic comments at 9.

[351] *See, e.g.*, Excel comments at 8; Sprint comments at 11.

[352] ACSI comments at 10.

[353] *See, e.g.*, GTE comments at 19; USTA reply at 6–7.

[354] 47 U.S.C. 251(b)(3).

[355] *See infra* paras. 163–164, for a discussion of specific technical standards for dialing delay.

[356] *In the Matter of Telephone Number Portability*, CC Docket No. 95–116, First Report and Order and Further Notice of Proposed Rulemaking, FCC 96–286 (July 2, 1996) (*Number Portability Order*) 61 FR 38605 (July 25, 1996).

[357] *Id.* at para. 56.

2. Specific Technical Standard for Dialing Delay

a. Background and Comments

163. In the *NPRM*, the Commission asked commenters to identify a specific period of time that would constitute an ''unreasonable dialing delay.'' NYNEX was the sole commenter proposing a quantitative measurement. In this regard, however, NYNEX recommends that the Commission should issue a *recommended* maximum period of delay rather than a mandatory standard.[358] NYNEX states that ''an appropriate recommendation for this time period is that it should not exceed 5 seconds.''[359] The majority of commenters urge the Commission not to impose a specific technical dialing delay standard at this time.[360] For example, GTE states that ''[n]umber portability, dialing parity and other newly required actions will undoubtedly affect network performance, including dialing delay, at least during a transition period. Any current determination of an unreasonable delay will be based on network designs that will bear little resemblance to the network structures of tomorrow.''[361] Finally, the Illinois Commission states that it is currently studying the same issue for number portability in Chicago, and suggests that the Commission may wish to adopt the Illinois Commission's standard upon completion of its study.[362]

b. Discussion

164. We conclude that the record does not provide an adequate basis for determining a specific technical standard for measuring unreasonable dialing delays. Commenters do not address separately the dialing delay prohibition as it applies to each of the services covered by section 251(b)(3): local and toll dialing parity, and nondiscriminatory access to operator services and directory assistance. We thus conclude that, until dialing delay can be reliably measured after dialing parity is a reality, the ''comparative'' standard adopted in paragraph 157, *supra*, will provide a workable national rule for the industry. We intend to revisit the issue at a future date if we should find that our ''comparative'' standard is inadequate to ensure fair competition.

IV. Network Disclosure

165. Section 251(c)(5) of the 1996 Act requires incumbent LECs to ''provide reasonable public notice of changes in the information necessary for the transmission and routing of services using that local exchange carrier's facilities or networks, as well as of any other changes that would affect the interoperability of those facilities or networks.''

A. Scope of Public Notice

1. Definition of ''Information Necessary for Transmission and Routing''

a. Background and Comments

166. In our *NPRM*, we tentatively concluded that ''information necessary for transmission and routing'' should be defined ''as any information in the incumbent LEC's possession that affects interconnectors' performance or ability to provide services.''[363]

167. Most commenters support the tentative conclusion in the *NPRM*.[364] For example, MFS asserts that our definition would ''minimize the risk that an incumbent LEC could take actions inconsistent with (interconnection and interoperability)'' and that the term ''should be applied as broadly as possible.''[365] MCI states that a broad definition is ''necessary for new entrants to receive notice of technical changes.''[366] Time Warner also asserts that ''this broad-based definition * * * is critical to ensuring that (incumbent local exchange carriers) fulfill all of the obligations imposed upon them by Section 251(c).''[367]

168. Some, mostly smaller, incumbent LECs disagree with our proposed standard, stating that it is ''too broad,'' ''an onerous burden,'' ''not necessary,'' and ''may not be possible.''[368] Other incumbent LECs claim that network disclosure requirements should be limited to ''changes that affect the interconnection or interoperability of the network.''[369] Their overarching concern is that the proposed definition's reference to ''any information'' would be interpreted so broadly that virtually any network-related information would fall within the ambit of the disclosure requirement.[370] Some incumbent LECs also express the fear that a broad interpretation of the statute ''might expose (them) to unintended liability for giving information that the local exchange carrier is not qualified to provide'' or that the (local exchange carrier) might be held liable for results of decisions that the interconnector made based upon this information.''[371] These incumbent LECs claim that competing providers' informational needs would be fulfilled even if public disclosure were limited to ''relevant interfaces or protocols.''[372] USTA suggests an alternate definition: ''all changes in information necessary for the transmission and routing of services using the local exchange carrier's facilities, or that affects interoperability.''

169. According to some competing providers, narrowing the scope of information that must be publicly disclosed would preserve the information advantage that incumbent LECs possessed before the passage of the 1996 Act.[373] Also, AT&T notes that a narrowly constructed disclosure requirement would contradict the language of the statute that specifically identifies ''changes that would affect the interoperability of those facilities or networks.''[374] AT&T states that some information ''is both necessary for proper transmission and routing and can affect the network's interoperability'' although it is not directly relevant to the interconnection point.[375] AT&T presents five examples of technical changes that do not directly relate to the interconnection point but that nevertheless could have ''profound'' implications for competing service providers. These changes include those that (1) alter the timing of call processing; (2) require competing service providers to install new equipment, such as echo cancelers; (3) affect recognition of messages from translation nodes; (4) alter loop impedance levels, which could cause service disruptions; and (5) could disable a competing service provider's loop testing facilities.[376]

[358] *See* NYNEX comments at 9–10.

[359] *Id.*

[360] *See, e.g.,* Bell Atlantic comments at 9; MFS reply at 8.

[361] GTE comments at 19.

[362] *See* Illinois Commission comments at 70.

[363] *NPRM* at para. 189.

[364] *See, e.g.,* ACSI comments at 11; ALTS comments at 2; AT&T comments at 23; Bell Atlantic comments at 10; GCI comments at 4; Illinois Commission comments at 59; MCI comments at 15; MFS comments at 12–13; Ohio Commission comments at 4; Telecommunications Resellers Association comments at 11; Time Warner comments at 3; U S WEST comments at 12.

[365] MFS comments at 12–13.

[366] MCI comments at 15.

[367] Time Warner comments at 3.

[368] GVNW comments at 1; Ameritech comments at 26; Rural Tel. Coalition comments at 2.

[369] Bell Atlantic reply at 9.

[370] GVNW comments at 1; Ameritech comments at 26.

[371] GVNW comments at 1–2.

[372] Nortel states that the incumbent local exchange carrier should only ''provide the interface information,'' and the competing service provider should then ''perform its own 'reverse engineering' in developing its own products so as to be compatible with the interface.'' Nortel comments at 5.

[373] *See, e.g.,* Time Warner comments at 3–4.

[374] AT&T reply at 25–26.

[375] *Id.*

[376] AT&T reply at n.56.

170. Some incumbent LECs suggest that network disclosure requirements should also apply to competing service providers.[377] MCI and MFS contend, however, that the plain language of the statute requires imposition of public disclosure requirements only upon incumbent LECs. MFS states that the duty to disclose change information was imposed upon incumbent local exchange carriers because they have sufficient ''control over network standards to harm competition'' and the ''requisite size and market power to change their networks in a manner that stymies competition.'' [378] MFS argues that imposing notification requirements on competing service providers would be an ''empty exercise'' because ''new entrants * * * can do little, if anything, to change their networks in a manner that adversely impacts the (incumbent LECs).'' [379] MFS also argues that competing service providers have ''powerful economic incentives'' for maintaining compatibility with incumbent local exchange networks.[380]

b. Discussion

171. Section 251(c)(5) requires that information about network changes must be disclosed if it affects competing service providers' performance or ability to provide service. Requiring disclosure about network changes promotes open and vigorous competition contemplated by the 1996 Act. We find that additional qualifiers that restrict the types of information that must be disclosed, such as ''*relevant* information or protocols,'' would create uncertainty in application and appear inconsistent with the statutory language. Timely disclosure of changes reduces the possibility that incumbent LECs could make network changes in a manner that inhibits competition. In addition, notice of changes to ordering, billing and other secondary systems is required if such changes will have an effect on the operations of competing service providers, because the proper operation of such systems is essential to the provision of telecommunications services.

172. We agree with MCI and MFS that the plain language of the statute requires imposition of public disclosure requirements only upon incumbent LECs.[381] In addition, we conclude that imposing this requirement upon competing service providers would not enhance competition or network reliability. While competing service providers must respond to incumbent LEC network changes, competing service providers, in general, are not in a position to make unilateral changes to their networks because they must rely so heavily on their connection to the incumbent LEC's network in order to provide ubiquitous service. Accordingly, competing service providers already face sufficient incentives to ensure compatibility of their planned changes with the incumbent LEC's network. In addition, if an incumbent LEC were permitted to obtain such information from a competing service provider, the incumbent LEC might be able to obtain the competing service provider's business plans and thereby stifle competition.[382]

173. We conclude that our disclosure standard is consistent not only with section 251(c)(5), but also with the requirements of the ''all carrier rule'' [383] and the scope of the *Computer III* [384] disclosure requirement, both of which have been applied to incumbent LEC activities for some time. In light of these preexisting requirements, we find that the standard we proposed in the NPRM is not burdensome but reasonable, providing sufficient disclosure to insure against anti-competitive acts as well as to ensure certain and consistent disclosure requirements.

174. We have considered the impact of our rules in this section on small incumbent LECs, including Rural Tel. Coalition's and GVNW's requests for a less inclusive definition of ''information necessary for transmission and routing.'' [385] We do not adopt these proposals because we are unable to grant such leniency to small businesses and simultaneously ensure adequate information disclosure to facilitate the development of a pro-competitive environment for every market participant, including other small businesses. We note, however, that under section 251(f)(1) certain small incumbent LECs are exempt from our rules until (1) they receive a *bona fide* request for interconnection, services, or network elements; and (2) their state commission determines that the request is not unduly economically burdensome, is technically feasible, and is consistent with the relevant portions of section 254. In addition, certain small incumbent LECs may seek relief from our rules under section 251(f)(2).[386]

2. Definition of ''Services''

a. Background and Comments

175. Commenters, including incumbent LECs, interexchange carriers, and industry organizations, unanimously support our tentative conclusion that the term ''services,'' as used in section 251(c)(5), includes both telecommunications services and information services, as defined in sections 3(46) and 3(20), respectively.[387] Parties agree that it is reasonable to require that providers of both telecommunications and information services receive this information. ALTS points out that exclusion of information services or telecommunications services from our definition would be

[377] Ameritech comments at 29; BellSouth comments at 2; NYNEX comments at 15–16; Rural Tel. Coalition comments at n.4.

[378] MFS reply at 26.

[379] MFS reply at 26–27.

[380] *Id.*

[381] MCI reply at 7; MFS reply at 25, 26.

[382] NCTA asserts that incumbent LECs are ''entirely capable of providing adequate notice of their network changes without 'full disclosure of competing service provider's operations and future plans.'" NCTA reply at 12.

[383] Unless clearly specified otherwise, in this *Order,* we use the term ''all carrier rule'' to refer to the Commission's network disclosure rule contained in 47 CFR 64.702, as interpreted in the *Second Computer Inquiry.* The all carrier rule obligates ''all carriers owning basic transmission facilities (to release) all information relating to network design * * * to all interested parties on the same terms and conditions, insofar as such information affects either intercarrier interconnection or the manner in which interconnected (customer-premises equipment) operates.'' *Amendment of Section 64.702 of the Commission's Rules and Regulations (Second Computer Inquiry), Memorandum Opinion and Order on Reconsideration,* 84 F.C.C.2d 50, 82–83 (1980) 46 FR 19852 (April 1, 1981), *further recon.,* 88 FCC 2d 512 (1981), *aff'd sub nom. Computer and Communications Indus. Ass'n* v. *FCC,* 693 F.2d 198 (D.C. Cir. 1982), *cert. denied,* 461 U.S. 938 (1983). The all carrier rule also requires that ''[w]hen such information is disclosed to the separate corporation it shall be disclosed and be available to any member of the public on the same terms and conditions.'' *See* 47 CFR 64.702; *Application of The Southern New England Tel. Co.,* 10 FCC Rcd 4558, 4559 n.23 (1995); *Competition in the Interstate Interexchange Marketplace,* Report and Order, 6 FCC Rcd 5880, 5911 n.270 (1991) (The all carrier rule obligates ''all carriers to disclose, reasonably in advance of implementation, information regarding any new service or change in the network.''); *Competition in the Interstate Interexchange Marketplace,* Report and Order, 6 FCC Rcd. 5880, 5911 n.270. (1991) 56 FR 55235 (October 25, 1991).

Another of the Commission's rules, 47 CFR 68.110(b), requires similar disclosure to customers of network changes ''if such changes can be reasonably expected to render any customer's terminal equipment incompatible with telephone company communications facilities, or require modification or alteration of such terminal equipment, or otherwise materially affect its use or performance.'' We will refer to this rule specifically by number where necessary.

[384] *See infra* para. 204 and n.449.

[385] Rural Tel. Coalition comments at 2; GVNW comments at 1.

[386] For a discussion of the implications and operation of section 251(f), *see First Report and Order* at section XII.

[387] 47 U.S.C. § 153(20), (46). *See NPRM* at para. 189; ALTS comments at 2; Ameritech comments at 25; BellSouth comments at 3; District of Columbia Commission comments at 6–7; GCI comments at 4; Illinois Commission comments at 59; MCI comments at 15; MFS comments at 12; Telecommunications Resellers Association comments at 11; U S WEST comments at 12.

''needlessly restrictive.'' [388] BellSouth also notes that the inclusion of information services for public notice purposes should not vest information service providers with substantive rights under Section 251, except where they are also operating as a telecommunications carrier under the 1996 Act.[389]

b. Discussion

176. We conclude that the term ''services'' includes both telecommunications services and information services, as defined in sections 3(46) and 3(20) of the Act, respectively. Providers of both telecommunications services and information services may make significant use of the incumbent LEC's network in making these offerings. Accordingly, exclusion of either information services providers or telecommunications services providers would be needlessly restrictive. We also affirm that the inclusion of information services for public notice purposes does not vest information service providers with substantive rights under other provisions within section 251, except to the extent that they are also operating as telecommunications carriers.

3. Definition of ''Interoperability''

a. Background and Comments

177. The Commission tentatively concluded that the term ''interoperability,'' as used in section 251(c)(5), should be defined as ''the ability of two or more facilities, or networks, to be connected, to exchange information, and to use the information that has been exchanged.'' [390] This definition of ''interoperability'' was taken from the *IEEE Standard Dictionary of Electrical and Electronics Terms*.[391] Commenters, including incumbent LECs, interexchange carriers, state commissions, and industry associations, are unanimous in their support for our tentative conclusion.[392] The Ohio Commission also suggests that we expand our definition of ''interoperability'' to ''recognize that the exchange of traffic between an (incumbent local exchange carrier) and an interconnector must be seamless and transparent to both parties' end users.'' [393] No alternative definitions for the term ''interoperability'' were proposed by commenting parties.

b. Discussion

178. We define the term ''interoperability'' as ''the ability of two or more facilities, or networks, to be connected, to exchange information, and to use the information that has been exchanged.'' As this definition of ''interoperability'' was taken from the *IEEE Standard Dictionary of Electrical and Electronics Terms,* we believe that this well established and widely accepted industry standard can be applied easily and consistently. We find that the concepts of seamlessness and transparency are already adequately incorporated into this definition's specific interoperability criteria, and that further exposition of these concepts is not necessary.

4. Changes That Trigger the Public Notice Requirement

a. Background and Comments

179. In the *NPRM,* we noted that ''public notice is critical to the uniform implementation of network disclosure, particularly for entities operating networks in numerous locations across a variety of states.'' [394] We requested comment as to what changes should trigger the notice requirement.

180. Several commenters suggest that timely notice should be provided whenever an upcoming change in the incumbent LEC's network may affect the way in which a competing provider offers its service.[395] Examples of such changes include, but are not limited to, changes in transmission, signalling standards, call routing, network configuration and logical elements.[396] Also, commenters assert that public notice should be required when a change will affect the electronic interfaces, data elements, or transactions that support ordering, provisioning, maintenance and billing of the network facilities.[397] The Illinois Commission notes, however, that the types of changes that trigger public notice should not be ''micro-defined'' because overly specific trigger requirements could create situations in which carriers would not be required to provide public notice if a particular change has not been clearly identified.[398] ALTS also supports a broadly defined class of changes that trigger network disclosure requirements, asserting that some changes, such as those affecting provisioning and billing for a carrier's service, might not otherwise be reported adequately, resulting in service disruptions.[399]

181. Ameritech claims that disclosure obligations should only be triggered by a new or ''substantially changed'' network interface, or a change that ''otherwise affects the routing or termination of traffic delivered to or from the incumbent LEC's network.'' [400] Ameritech also claims that changes ''that do not impact interconnection and interoperability * * * do not need to be disclosed at all.'' [401] AT&T observes, however, that public notice requirements should also apply to some changes that do not directly relate to the interconnect point.[402]

b. Discussion

182. We conclude that an incumbent LEC must provide public notice in accordance with the rules and schedules we adopt in this proceeding, once the incumbent LEC makes a decision to implement a change that either (1) affects competing service providers' performance or ability to provide service; or (2) otherwise affects the ability of the incumbent LEC's and a competing service provider's facilities or network to connect, to exchange information, or to use the information exchanged. We believe that a broad standard is appropriate, to reduce the possibility that incumbent LECs may fail to disclose information a competing service provider may need in order to maintain adequate interconnectivity and interoperability in response to incumbent LEC network changes. Examples of network changes that would trigger public disclosure obligations include, but are not limited to, changes that affect: Transmission; signalling standards; call routing; network configuration; logical elements; electronic interfaces; data elements; and transactions that support ordering, provisioning, maintenance and billing. This list is not exclusive but exemplary; incumbent LECs are not exempted from public notice requirements for a particular change that is not included among these examples.

[388] ALTS comments at 2.

[389] BellSouth comments at 3.

[390] *NPRM* at para. 189.

[391] *See IEEE Standard Dictionary of Electrical and Electronics Terms* 461 (J. Frank ed. 1984).

[392] ALTS comments at 2; Ameritech comments at 25; AT&T comments at 23; District of Columbia Commission comments at 6–7; GCI comments at 4; Illinois Commission comments at 4; MCI comments at 15; MFS comments at 12–13; Ohio Commission comments at 4; Telecommunications Resellers Association comments at 12; U S WEST comments at 12.

[393] Ohio Commission comments at 4.

[394] *NPRM* at para. 190.

[395] ACSI comments at 11; ALTS comments at 2–3; AT&T comments at 23; Cox comments at 9–10; GCI comments at 5; Ohio Commission comments at 4; and Time Warner comments at 4.

[396] ACSI comments at 11.

[397] *See, e.g.,* AT&T comments at 24; Time Warner comments at 4.

[398] Illinois Commission comments at 59.

[399] ALTS comments at 2, 3.

[400] Ameritech comments at 26, 27.

[401] *Id.*

[402] AT&T reply at 26 n.56.

5. Types of Information To Be Disclosed

a. Background

183. In the *NPRM*, we tentatively concluded that incumbent LECs should be required to ''disclose all information relating to network design and technical standards, and information concerning changes to the network that affect interconnection.'' [403] We also tentatively concluded that incumbent LECs specifically must provide: (1) The date changes are to occur; (2) where changes are to be made or to occur; (3) the type of changes; and (4) the potential impact of changes; and that these four categories represented the ''minimum information that a potential competitor would need in order to achieve and maintain efficient interconnection.'' [404]

b. Comments

184. A number of commenters agree with our tentative conclusions regarding the breadth of information that must be reported, as well as our minimum reporting requirements.[405] Ameritech, however, claims that our requirement is ''too broad'' and would ''impose an onerous burden'' on incumbent LECs, exceeding the statutory requirements of section 251(c)(5).[406] Ameritech asserts that ''excessive exchange of information between competitors is inconsistent with * * * a competitive marketplace'' and could spur ''allegations of collusion and concerted action.'' [407] Cox and Time Warner, however, state that uniform public notice of sufficient information can attenuate anticompetitive behavior. ALTS, AT&T and MCI suggest that the information that must be disclosed should include, but should not be limited to, technical specifications and references to standards regarding transmission, signaling, routing and facility assignment as well as references to technical standards that are applicable to any new technologies or equipment, or which may otherwise affect interconnection.

185. A significant cross-section of commenters specifically advocates disclosure of the potential impact of changes.[408] For example, Cox notes that disclosure should, at a minimum, enable a competing service provider to understand: ''(1) How its existing technical interconnection arrangements will be affected; and (2) how the form and content of the information passed between the interconnected networks will change.'' [409] ACSI clearly states that ''the content of the notice should specifically identify * * * the impact of the change on current interconnection or access arrangements.'' [410]

186. Some incumbent LECs, however, take exception to our tentative conclusion to impose on them an obligation to make public disclosure of the potential impact of network changes.[411] They argue that this obligation would require incumbent LECs to become ''experts on the operations of other carriers,'' or impose a ''duty to know what (an) interconnector's service performance abilities are.'' [412] Specifically, USTA expresses concern that this requirement ''could be misconstrued as a duty to predict what the precise impact might be, or to educate a competitor on how to re-engineer their network.'' [413] Ameritech claims that this requirement is ''unfair,'' and ''of little or no value,'' and implies that this requirement creates a ''general duty for (incumbent LECs) to operate their competitor's businesses or help them market their services.'' [414] BellSouth asserts that ''the better approach would be to (disclose) information from which an interconnecting carrier would be able to determine for itself whether its service performance or abilities might be affected.'' [415] NYNEX alleges that ''(s)uch proposals are over-broad and unnecessary to ensure * * * network interconnection/interoperability.'' [416] NYNEX rejects responsibility for evaluating the effect that changes it would make might have upon competing service providers and asserts that ''there is no basis for changing the traditional responsibility of each carrier to maintain its own network and respond to technological and market changes.'' [417] NYNEX also claims that while it has the ability to ''make an assessment of the likely impact of a technical change at the interface with a competitor's network,'' it would require ''detailed knowledge of a competitor's network architecture'' in order to calculate the impact a change may have on a competing service provider's performance.[418]

187. MCI and TCC suggest that an incumbent LEC should also be required to designate a contact for additional information in its public notice. PacTel argues, in response, that such a requirement would be ''impossible to fulfill'' because it would require an incumbent LEC to designate a ''single omniscient individual.'' [419] MFS states that the public notice should also include: ''(a) The charges that the incumbent LEC anticipates will apply to the carrier for the change; (b) the specific number of circuits affected if the change occurs at the time of the notification; (c) the projected minimum, maximum, and average down times per affected circuit; (d) alternatives available to the interconnector; [420] and (e) any other information necessary to evaluate alternatives and effectuate necessary changes or challenges.'' [421] The Ohio Commission, in contrast, claims that information relating to network design should be excepted from public disclosure, and that incumbent LECs should only be obliged to disclose information regarding changes to existing interconnection arrangements.[422]

c. Discussion

188. We conclude that we should adopt a requirement of uniform public notice of sufficient information to deter anticompetitive behavior and that, at a minimum, incumbent LECs should give competing service providers complete information about network design, technical standards and planned changes to the network. Specifically, public notice of changes shall consist of: (1) The date changes are to occur; (2) the location at which changes are to occur; (3) types of changes; (4) the reasonably foreseeable impact of changes to be

[403] *NPRM* at para. 190. We referred, as an example, to the ''All Carrier Rule,'' which requires public disclosure of ''all information relating to network design and technical standards * * * [affecting] interconnection * * * prior to implementation and with reasonable advance notification.'' *See* note 383, *supra*.

[404] *NPRM* at para. 190.

[405] Illinois Commission comments at 60; ALTS comments at 3; AT&T comments at 23–24; District of Columbia Commission comments at 7; Excel comments at 10; GCI comments at 4–5; MCI comments at 15; MFS comments at 12–13; NCTA comments at 12; Telecommunications Resellers Association comments at 12.

[406] Ameritech comments at 26.

[407] *Id*.

[408] ACSI comments at 11; ALTS comments at 3; District of Columbia Commission comments at 7; Excel comments at 10; GCI comments at 5; MCI comments at 15; MFS comments at 12–13; Ohio Commission comments at 5; TCC reply at 23; Telecommunications Resellers Association comments at 12; Time Warner comments at 8.

[409] Cox reply at 13.

[410] ACSI comments at 11.

[411] Ameritech comments at 28; BellSouth comments at 3; GVNW comments at 3; NYNEX reply at 9; USTA reply at 11.

[412] BellSouth comments at 3. *See, e.g.*, Ameritech comments at 28; GVNW Comments at 3; NYNEX reply at 9.

[413] USTA reply at 11.

[414] Ameritech comments at 28.

[415] BellSouth comments at 3.

[416] NYNEX reply at 9.

[417] *Id*.

[418] NYNEX reply at 9 n.24.

[419] PacTel reply at 6–7.

[420] Although MFS does not elaborate on this requirement, we interpret this suggestion as a request that an incumbent LEC identify in its public notice a range of proposed competing service provider responses to the planned change that will maintain interconnectivity and interoperability of the carriers' networks.

[421] MFS comments at 14.

[422] Ohio Commission comments at 5.

implemented, and (5) a contact person who may supply additional information regarding the changes. Information provided in these categories must include, as applicable, but should not be limited to, references to technical specifications, protocols, and standards regarding transmission, signaling, routing and facility assignment as well as references to technical standards that would be applicable to any new technologies or equipment, or that may otherwise affect interconnection.

189. We find that making available a contact person will simplify the public notification process and reduce the risk that the notifications will be misunderstood or misconstrued. Commenters have requested that public notices include a variety of specific information categories, some of which may not be covered by the specific categories identified in the *NPRM*. Such specific information, however, may be inapplicable, unnecessary or proprietary in some circumstances and inadequate or confusing in others. Accordingly, we require instead that incumbent LECs identify a contact person. Such a contact need not be ''omniscient,'' but rather should be able to serve as an initial contact point for the sharing of information regarding the planned network changes.

190. Providing notice of the reasonably foreseeable potential impact of changes does not require incumbent LECs to educate a competitor on how to re-engineer its network, or to be experts on the operations of other carriers, or impose a duty to know the competing service provider's service performance or abilities. Rather, we intend that incumbent LECs perform at least rudimentary analysis of the network changes sufficient to include in its notice (where appropriate) language reasonably intended to alert those likely to be affected by a change of anticipated effects. We find that such cautionary language will be a valuable, but not burdensome, element of reasonable public notice.

191. We do not limit network disclosure to information pertinent to those changes in incumbent LEC network design or technical standards that will affect existing interconnection arrangements, as requested by the Ohio Commission. Such a limitation is neither consistent with the obligations imposed by section 251(c)(5) nor consistent with the development of competition. In formulating interconnection and service plans, both actual and potential competing service providers need information concerning network changes that potentially could affect anticipated interconnection, not just those changes that actually affect existing interconnection arrangements.

B. How Public Notice Should Be Provided

1. Dissemination of Public Notice Through Industry Fora and Publications

a. Background

192. Section 251(c)(5) requires incumbent LECs to provide ''reasonable public notice'' of relevant network changes. In the *NPRM*, the Commission requested comment on how this notice should be provided. The Commission tentatively concluded that ''full disclosure of the required technical information should be provided through industry fora or in industry publications.'' [423] The Commission stated that ''this approach would build on a voluntary practice that now exists in the industry and would result in broad availability of the information.'' [424] The Commission sought comment on this tentative conclusion. The Commission also requested comment on whether a reference to information on network changes should be filed with the Commission and, if so, where that information should be located.

b. Comments

193. Most commenters agree with our tentative conclusion in the *NPRM* that existing industry fora and publications are appropriate vehicles for public notice of network changes.[425] Bell Atlantic notes that ''industry participants with an interest in new interfaces routinely monitor publications and announcements for disclosures.'' [426] Some incumbent LECs support the use of industry fora and publications because they are well established, already in place, reach the targeted audience, have worked effectively for a number of years, or allow for widespread dissemination.[427] USTA states that ''voluntary practices can serve as a platform from which to implement this act.'' [428]

194. Several commenters, however, caution that industry fora and publications should not be the only vehicles used for the public dissemination of network change information [429] and request flexible disclosure methods.[430] Although MCI does not object to utilizing industry fora and publications, MCI cautions against over reliance on these vehicles because it ''do[es] not believe that * * * parties affected by technical changes [will] receive information in sufficient detail, objectivity, and timeliness.'' [431] Many commenters indicate that additional disclosure vehicles are required because not all carriers participate in these fora on a regular basis (partly as a result of limited resources) [432] or because the BOCs, in the past, have used industry fora to limit competitors' access to full and timely information in order to put them at a competitive disadvantage.[433] Several commenters have noted the potential of the Internet as a vehicle for providing public notice of network changes.[434] Others specifically suggest that incumbent LECs should be required to file technical change information with the Commission ''in order to ensure a complete, reliable, and consistent body of information that all parties may utilize.'' [435] Some incumbent LECs, however, disagree, arguing that the Commission need not become a repository of disclosure notices because such Commission filings would be ''redundant with existing industry functions and contrary to the Commission's current initiative to eliminate unnecessary filings.'' [436]

195. Bell Atlantic suggests that ''direct disclosure to a mailing list of interconnectors should also be allowed.'' [437] MFS proposes extending direct mail notification to ''any other

[423] The Commission gave as examples the Network Operations Forum (NOF) and the Interconnection Carrier Compatibility Forum (ICCF). *NPRM* at para. 191.

[424] *NPRM* at para. 191.

[425] ALTS comments at 3–4; Ameritech comments at 28–29, reply at 17–18; AT&T comments at 24; Bell Atlantic comments at 10; Cox reply at 13; GCI comments at 5; Illinois Commission comments at 62; MCI comments at 15; MFS reply at 25; NCTA reply at 11; NYNEX comments at 15, reply at 10; PacTel comments at 7, reply at 6; Teleport comments at 11; Telecommunications Resellers Association at 12. *See also NPRM* at para. 191.

[426] Bell Atlantic also states that exchange carriers should be able to satisfy their disclosure obligation by indicating their intention to deploy specifications at the time that they are published by a standards organization. Bell Atlantic comments at 10–11.

[427] Ameritech reply at 17–18; GTE comments at 7.

[428] USTA comments at 11–12.

[429] *E.g.*, Cox reply at 12; MCI comments at 17; GVNW comments at 4; Rural Tel. Coalition comments at 3.

[430] *E.g.*, Rural Tel. Coalition comments at 3,5.

[431] MCI comments at 17–18.

[432] *See, e.g.*, Cox comments at 11, reply at 13; MCI comments at 17; GVNW comments at 4; Rural Tel. Coalition comments at 3.

[433] MCI comments at 17–18, reply at 7. Bell Atlantic refutes this allegation. Bell Atlantic reply at 10.

[434] *See, e.g.*, ALTS comments at 3–4; U S WEST comments at 14; MCI comments at 17; Time Warner comments at 10 n.12; MFS reply at 25; TCC reply at 24.

[435] MCI comments at 19; MFS comments at 13. *See also* Time Warner comments at 10 (establishing the Commission as a ''central point of reference'' could be less burdensome on incumbent LECs than other means of providing public notice).

[436] BellSouth comments at 4 n.11. *See also* NYNEX reply at 10; PacTel reply at 6.

[437] Bell Atlantic comments at 10.

carrier * * * who specifically requests such notice.'' [438] PacTel, however, claims that imposing these sorts of requirements would ''impose excessive and unnecessary costs on (incumbent) LECs.'' [439]

196. BellSouth argues that no Commission rule is necessary because current voluntary practices are ''sufficient to ensure that this information is broadly available.'' [440] Similarly, GVNW suggests that information should only be passed to competing service providers ''case by case * * * as required.'' [441] Several commenters, however, disagree. Time Warner, for example, contends that ''the Commission must adopt a uniform * * * rule which prescribes a specific method by which notification and disclosure must be provided'' and that will allow interested parties to gain ready access to the information they require.[442]

197. The District of Columbia Commission asserts that state commissions may also require information to be filed at the state level, and may need the same information in order to comply with section 252. As such, state commissions could also be used to make information available to small competing service providers. AT&T, however, argues that there are no specific differences among the various states that are ''material'' to our network disclosure requirements.[443]

c. Discussion

198. We conclude that incumbent LECs may fulfill their network disclosure obligations either (1) by providing public notice through industry fora, industry publications, or on their own publicly accessible Internet sites; or (2) by filing public notice with the Commission's Common Carrier Bureau, Network Services Division, in accordance with the format and method requirements of the rules we are adopting in this proceeding. In either case, the public notice must contain the minimum information categories identified in paragraph 188, above. Incumbent LECs using public notice methods other than Commission filings must file a certification with the Common Carrier Bureau, Network Services Division, identifying the proposed change(s), stating that public notice has been given in compliance with this Order, identifying the location of the information describing the change and stating how the information can be obtained by interested parties. This certification must also comply with the rules we adopt in this proceeding.

199. As discussed above, we conclude that industry fora, industry publications, and the Internet may be used to make public disclosure of network changes and required technical information. We affirm our belief that ''this approach would build on a voluntary practice that now exists in the industry and would result in broad availability of the information.'' [444] Reliance solely on voluntary participation in industry fora and publications, however, may inhibit the ability of some small carriers to disseminate or receive this information. Because of their more limited resources, some smaller incumbent LECs and competing service providers do not participate in these fora on a regular basis; nevertheless, all carriers, competing service providers, and potential competitors must have equal opportunities to provide and to receive change information on a national scale. We believe that wide availability of pertinent network change information effectively removes potential barriers to entry, which could otherwise frustrate the efforts of new competitors. As a consequence, we conclude that the Commission should function as a ''backstop'' source of information for other interested parties. Accordingly, in lieu of disclosure in industry fora, publications, or the Internet, an incumbent LEC may file network change information directly with the Commission. In the alternative, if an incumbent LEC chooses to provide public notice through one or more industry fora or publications, or the Internet, we require that it also file a certification with the Commission containing the information outlined above. We are confident that even small incumbent LECs with limited resources will be able to use one of these alternatives to give public notice of network changes.

200. An incumbent LEC must maintain both the information disclosed in its public notice and any nondisclosed supporting information that is nevertheless relevant to the planned change, until the change is implemented. As discussed in paragraph 235, *infra*, once a change is implemented in the incumbent LEC's network, information on the change must be disclosed under the general interconnection obligations imposed by section 251(c)(2).

201. We find that information filed with the Commission under section 251(c)(5) should eventually be made available on the FCC Home Page or through other online access vehicles, such as ''LISTSERV'' subscription mailings or others, and we intend to explore this option fully for the future. In addition, we will explore vigorously the possibility that hypertext links from the Commission Home Page to incumbent LEC Internet sites could both facilitate public notice and centralize access to change information. We find that direct mail notification alone does not comport with our interpretation of ''public notice'' as used in this proceeding, because such direct mailings do not provide notice to the ''public,'' but rather provide individual notice to a selected group of recipients. Such mailings could, however, supplement other methods of notification.

202. We also address the impact on small incumbent LECs. We agree with GVNW [445] and Rural Tel. Coalition [446] that we can mitigate the impact of our rules on small incumbent LECs by allowing public notice to be given at several alternative locations. Because many of these carriers lack the resources to participate in industry fora, we have also provided low cost alternatives, including Internet postings or Commission filings. We expect that our requirement that either public notice or certification be filed with the Commission will allow small entities, both incumbent LECs and new entrants, to locate network change information quickly and inexpensively. In any event, under section 251(f)(1), certain small incumbent LECs are exempt from our rules until (1) they receive a *bona fide* request for interconnection, services, or network elements; and (2) their state commission determines that the request is not unduly economically burdensome, is technically feasible, and is consistent with the relevant portions of section 254. In addition, certain small incumbent LECs may seek relief from our rules under section 251(f)(2).[447]

[438] MFS comments at 14, reply at 25.

[439] PacTel reply at 6.

[440] BellSouth comments at 4.

[441] GVNW comments at 4.

[442] Time Warner comments at 9. *See also* AT&T reply at 27 n.58. (arguing that the very existence of such broad disagreement on this issue itself bespeaks the need for a uniform national rule and that the absence of a uniform public disclosure requirement would lead to ''disparate application of a uniform federal statutory duty, unduly narrow interpretations of that duty by [independent local exchange carriers] * * * and competitive harm to new entrants'').

[443] AT&T reply at n.59.

[444] *NPRM* at para. 191.

[445] GVNW comments at 4.

[446] Rural Tel. Coalition comments at 3,5.

[447] For a discussion of the implications and operation of section 251(f), *see First Report and Order*, section XII.

2. When Should Public Notice of Changes be Provided?

a. Background

203. Section 251(c)(5) requires an incumbent LEC to provide ''reasonable public notice'' of certain changes to its network. In the *NPRM,* we tentatively concluded that this statutory language requires incumbent LECs: (1) To provide notice of these changes within a ''reasonable'' time in advance of implementation; and (2) to make the information available within a ''reasonable'' time if responding to an individual request.[448] We sought comment on what constitutes a reasonable time in each of these situations, and on whether the Commission should adopt a specific timetable for disclosure of technical information.

204. In the *NPRM,* we specifically sought comment on whether we should adopt a disclosure timetable similar to that adopted by the Commission in the *Computer III* proceeding.[449] In Phase II of that proceeding, the Commission required AT&T and the BOCs to disclose information about network changes or new network services that affect the interconnection of enhanced services with the network at two points in time.[450] First, these carriers were required to disclose such information at the ''make/buy'' point—that is, when the carrier decides to make itself, or to procure from an unaffiliated entity, any product the design of which affects or relies on the network interface.[451] Second, carriers were required to release publicly all technical information at least twelve months prior to the introduction of a new service or network change that would affect enhanced service interconnection with the network.[452] If a carrier could introduce a new service between six and twelve months of the make/buy point, public disclosure was permitted at the make/buy point, but in no event could the carrier introduce the service earlier than six months after the public disclosure.[453]

205. The disclosure obligations imposed by section 251(c)(5) are broader than those adopted in the *Computer III* proceeding. While *Computer III* applies only to the BOCs and to AT&T, section 251(c)(5) imposes disclosure requirements on all incumbent LECs. Furthermore, while the *Computer III* disclosure requirements apply only to technical information related to new or modified network services affecting the interconnection *of enhanced services* to the BOC networks, section 251(c)(5) mandates disclosure of a much broader spectrum of information.[454] Accordingly, we sought comment in the *NPRM* on whether the Commission should adopt a timetable comparable to that imposed in *Computer III* for section 251(c)(5) network disclosure purposes and, if so, how such a timetable should be implemented.

b. Comments

206. Most commenters express support for our tentative conclusion that section 251(c)(5) requires incumbent LECs to disclose publicly information on network changes within a reasonable time in advance of implementation.[455] No commenters suggest that the timing of disclosure is not governed by section 251(c)(5)'s ''reasonableness'' standard, although at least two commenters appear to indicate that it would be reasonable to implement network changes immediately upon disclosure.[456] Commenters also support our tentative conclusion that an incumbent LEC must make this information available within a ''reasonable'' time if responding to an individual request.[457] Time Warner requests a concrete standard in this area and suggests that the Commission should indicate that, once an incumbent LEC has released a public notice of change under section 251(c)(5), it must respond to individual requests for detailed, technical information concerning network changes under section 251(c)(5) within ten business days of receiving the request.[458]

207. Commenters were split on whether we should adopt a specific disclosure timetable for section 251(c)(5) purposes. Several commenters[459] oppose the adoption of a specific timetable, primarily arguing that: (1) Any regulations adopted under section 251(c)(5) should define only minimum guidelines, allowing the states flexibility under section 251(d)(3) to adopt more stringent disclosure requirements dictated by local conditions; (2) a fixed disclosure timetable will needlessly or arbitrarily delay the introduction of new services or technical advances; (3) overly long advance disclosure periods will put the incumbent LECs at a competitive disadvantage because competitors will be able to bring planned services to market more quickly; (4) the industry already has in place detailed disclosure guidelines that are widely followed on a voluntary basis and that obviate the need for independent Commission examination of this issue; and (5) the Commission's existing ''all carrier'' rule, which contains a flexible standard, adequately addresses the obligations imposed by section 251(c)(5).[460] GVNW warns that the interval from the make/buy decision to in-service for small LECs is often less than twelve months and states that the Commission should not require technology to be implemented at a slower pace than is technically feasible merely to satisfy a notice requirement.[461] Commenters also argue that carriers already face powerful incentives to ensure that their networks interconnect properly because the reputation of both the incumbent LEC and the interconnecting LEC are at stake if service fails.[462] In addition, BellSouth claims that section 251(c)(5) is ''self-effectuating and needs no interpretive regulations.''[463]

---

[448] *NPRM* at para. 192.

[449] *Amendment of Section 64.702 of the Commission's Rules and Regulations (Computer III), Phase I,* 104 F.C.C.2d 958 (1986) (*Phase I Order*), *recon.,* 2 FCC Rcd 3035 (1987) (*Phase I Recon. Order*), *further recon.,* 3 FCC Rcd 1135 (1988) (*Phase I Further Recon. Order*), *second further recon.,* 4 FCC Rcd 5927 (1989) (*Phase I Second Further Recon.*), *Phase I Order and Phase I Recon. Order vacated, California* v. *FCC,* 905 F.2d 1217 (9th Cir. 1990) (*California I*); *Phase II,* 2 FCC Rcd 3072 (1987) (*Phase II Order*) 52 FR 20714 (1987), *recon.,* 3 FCC Rcd 1150 (1988) (*Phase II Recon. Order*), *further recon.,* 4 FCC Rcd 5927 (1989) (*Phase II Further Recon. Order*), *Phase II Order, vacated, California I,* 905 F.2d 1217 (9th Cir. 1990); *Computer III Remand Proceedings,* 5 FCC Rcd 7719 (1990) 56 FR 00965 (December 17, 1990) (*ONA Remand Order*), *recon.,* 7 FCC Rcd 909 (1992), 57 FR 05391 (January 24, 1992), *pets. for review denied California* v. *FCC,* 4 F.3d 1505 (9th Cir. 1993) (*California II*); *Computer III Remand Proceedings: Bell Operating Company Safeguards and Tier 1 Local Exchange Company Safeguards,* 6 FCC Rcd 7571 (1991) (*BOC Safeguards Order*), 57 FR 4373 (February 5, 1992); *BOC Safeguards Order, vacated in part and remanded, California* v. *FCC,* 39 F.3d 919 (9th Cir. 1994) (*California III*), *cert. denied,* 115 S.Ct. 1427 (1995).

[450] *Phase II Recon. Order,* 3 FCC Rcd at 1164. Although the Ninth Circuit vacated the *Phase II Recon. Order,* the Commission reimposed the network disclosure requirements on remand. *See BOC Safeguards Order,* 6 FCC Rcd at 7602–7604.

[451] *Phase II Recon. Order,* 3 FCC Rcd at 1164.

[452] *Id.* at 1164–65.

[453] *Id.* at 1165.

[454] *See* discussion of the definitions of ''information necessary for the transmission and routing of services'' and ''interoperability,'' *supra.*

[455] *See, e.g.,* Ameritech comments at 29; GCI comments at 5; MCI comments at 15; Time Warner comments at 6; U S WEST reply at 1.

[456] BellSouth argues that ''the Commission should permit the offering of the new interface immediately upon the disclosure of the requisite information.'' BellSouth comments at 5; *see also* Nortel comments at 4.

[457] *See, e.g.,* MCI comments at 15.

[458] Time Warner comments at 11.

[459] *See, e.g.,* Ameritech comments at 29; BellSouth comments at 2, 5; District of Columbia Commission comments at 6, 7–8; GVNW comments at 5; Bell Atlantic reply at 8–9.

[460] The requirements of the all carrier rule are discussed in note 383 *supra.*

[461] GVNW comments at 4.

[462] *See, e.g.,* Ameritech comments at 30.

[463] BellSouth comments at 1.

208. Several other commenters argue that, while a disclosure timetable may be necessary, the *Computer III* requirements are too rigid. The District of Columbia Commission notes that any eventual disclosure timetable must balance ''the need to ensure the earliest possible disclosure of information needed by competitors (against) the need to impose the least administrative burden on'' incumbent LECs.[464] Accordingly, the District of Columbia Commission maintains that state commissions should be afforded flexibility to set timetables that are appropriate in light of local conditions.[465] Several commenters note existing industry notification timing standards adopted and issued by the Industry Carriers Compatibility Forum (''ICCF'')[466] and argue that widespread industry use of these standards has obviated the need for an additional Commission-imposed timetable.[467] MCI, however, cautions that these existing industry guidelines are inadequate because industry fora, in general, have historically been controlled by the RBOCs.[468] U S WEST supports disclosure at the ''make/buy'' point, but argues that additional notice should not be required for deployment of standard interfaces and services.[469] While MCI supports adoption of the *Computer III* timetable in this proceeding, it requests that, in addition: (1) We impose a mandatory 6-month disclosure period for network changes that can be implemented within 6 months of the ''make/buy'' point; and (2) we clarify that incumbent LECs must disclose relevant information they discover after services have been introduced, if such information would have been subject to prior disclosure.[470] AT&T also supports the general parameters of the *Computer III* timetable, but requests that we specifically impose a one year minimum advance disclosure obligation on changes to network elements or operations support system technology.[471] Similarly, while ACSI notes that the *Computer III* timetable is a ''useful starting place,'' it argues for a minimum one-year notice period for modification of the physical form of interconnection, with an additional 6 month period in which use of the changes by a competing service provider is permissive only.[472]

209. Cox argues that disclosure should be made at the ''earliest possible time'' and, in particular, at the time the decision is made internally to implement a change, with the ''make/buy'' point being considered the ''absolute latest date'' on which disclosure is permitted.[473] In addition, Cox requests that we obligate incumbent LECs to disclose any unimplemented network changes that are subject to the section 251(c)(5) notice requirement at the outset of interconnection negotiations.[474]

210. MFS proposes a tripartite scheme, loosely based on the *Computer III* timetable, that classifies certain changes as ''major,'' ''location,'' or ''minor.''[475] ''Major'' changes, would be defined as those ''introducing any change in network equipment, facilities, specifications, protocols, or interfaces that will require other parties to make any modification to hardware or software in order to maintain interoperability.'' Major changes would be subject to 18 months advance notice. ''Location'' changes would be defined as those ''that require changes in the geographic location to which traffic is routed, or at which unbundled network elements can be obtained, but (that) do not otherwise change the manner of interconnection or of access''; such changes could be implemented on 12 months notice. ''Minor'' changes, including those in ''numbering, routing instructions, signalling codes, or other information necessary for the exchange of traffic that do not require construction of new facilities or changes in hardware or software'' could be made upon notice in accord with the time intervals prescribed by the ICCF.[476]

211. Many commenters recognize the need for a concrete disclosure timetable. AT&T argues that the broad disagreement among commenters itself is evidence that section 251(c)(5) is not self-effectuating.[477] AT&T opposes the state-by-state approach advocated by the District of Columbia Commission, as well as the case-by-case approach advocated by Rural Tel. Coalition, because these approaches could lead to the disparate application of the uniform statutory duty imposed by section 251(c)(5). AT&T notes that the record does not reflect any material conditions that vary among states or justify differing rules. In addition, AT&T disputes the applicability of the ICCF timetable, since that document sets forth only guidelines to be used by the independent LECs in notifying the BOCs of network changes.[478]

212. Of the commenters supporting concrete federal standards, most support the adoption of the Computer III disclosure timetable.[479] PacTel notes that existing Commission disclosure requirements are familiar to the industry and adequate to meet the requirements of section 251(c)(5); accordingly it supports the establishment of ''safe harbor'' rules based on *Computer III* and the disclosure requirements contained in our existing rules.[480] As discussed above, although it advocates certain revisions, U S WEST agrees that ''disclosure pursuant to the Computer [III] Rules would seem to satisfy the requirements of the (1996) Act.''[481] GTE notes that the ''make/buy'' point is an appropriate disclosure trigger because it ensures both the delivery of timely information to parties that use the networks and the promotion of carriers' development efforts to support network innovation.[482]

213. Several commenters urge us to adopt rules prohibiting an incumbent LEC from disclosing network changes to certain preferred entities, including long distance or equipment manufacturing affiliates, prior to public disclosure.[483]

c. Discussion

214. We find that it would be unreasonable to expect other telecommunications carriers or information services providers to be able to react immediately to network changes that the incumbent LEC may have spent months or more planning and implementing; accordingly we reject requests to permit incumbent LECs to implement changes immediately on disclosure. In order to clarify incumbent LECs' obligations to disclose these changes a ''reasonable time in advance of implementation,'' we adopt a disclosure timetable based on that developed in the *Computer III* proceeding. Under this timetable,

[464] District of Columbia Commission comments at 8.

[465] *Id.*

[466] Industry Carriers Compatibility Forum, *Recommended Notification Procedures to Industry for Changes in Access Network Architecture,* ICCF 92–0726–004, Rev. 2 (January 5, 1996).

[467] USTA comments at 13; NYNEX comments at 16–17; SBC comments at 14.

[468] MCI reply at 7.

[469] U S WEST comments at 13.

[470] MCI comments at 20–21.

[471] AT&T comments at 25.

[472] ACSI comments at 12.

[473] Cox comments at 10–11.

[474] *Id.* at 11.

[475] MFS comments at 15–16.

[476] These intervals are prescribed in the ICCF *Recommended Notification Procedures. See* note 466 *supra.*

[477] AT&T reply at 27.

[478] *Id.*

[479] *See, e.g.,* Teleport comments at 11; GCI comments at 5; AT&T reply at 27.

[480] PacTel comments at 5. *See* 47 CFR 64.702(d)(2), 68.110(b).

[481] U S WEST comments at 12–13.

[482] GTE reply at 7–8 and comments cited at 7 n.15.

[483] *See, e.g.,* Time Warner comments at 8; NCTA reply at 12; Ohio Consumer's Council reply at 5–6.

incumbent LECs will be required to disclose planned changes, subject to the section 251(c)(5) disclosure requirements, at the ''make/buy'' point,[484] but a minimum of twelve months before implementation. If the planned changes can be implemented within twelve months of the make/buy point, then public notice must be given at the make/buy point, but at least six months before implementation.

215. With respect to changes that can be implemented within six months of the make/buy point, incumbent LECs may wish to provide less than six months notice. In such a case, the incumbent LEC's certification or public notice filed with the Commission, as applicable, must also include a certificate of service: (1) Certifying that a copy of the incumbent LEC's public notice was served on each provider of telephone exchange service that interconnects directly with the incumbent LEC's network a minimum of five business days in advance of the filing; and (2) providing the name and address of all such providers of local exchange service upon which the notice was served. The Commission will issue public notice of such short-term filings. Such short term notices will be deemed final on the tenth business day after the release of the Commission's public notice unless a provider of information services or telecommunications services that directly interconnects with the incumbent LEC's network files an objection to the change with the Commission and serves it on the incumbent LEC no later than the ninth business day following the release of the Commission's public notice. If such an objection is filed, the incumbent LEC will have the opportunity to respond within an additional five business days and the Common Carrier Bureau, Network Services Division, will issue, if necessary, an order determining the reasonable public notice period.

i. The Section 251(c)(5) Timetable

216. Without adequate notice of changes to an incumbent LEC's network that affect the ''information necessary for the transmission and routing'' of traffic, a competing service provider may be unable to maintain an adequately high level of interoperability between its network and that of the incumbent LEC. This inability could degrade the quality of transmission between the two networks or, in a worse case, could interrupt service between the two service providers.[485] Under the rules we adopt today, incumbent LECs must disclose changes subject to section 251(c)(5) at the ''make/buy'' point, *i.e.*, the time at which the incumbent LEC decides to make for itself, or procure from another entity, any product the design of which affects or relies on a new or changed network interface,[486] but at least twelve months in advance of implementation of a network change. In *Computer III*, the Commission defined ''product'' in the enhanced services context to be ''any hardware or software for use in the network that might affect the compatibility of enhanced services with the existing telephone network, or with any new basic services or capabilities.''[487] We believe that this definition can be used to craft a definition of ''product'' for purposes of section 251(c)(5). Accordingly, for purposes of network disclosure under section 251(c)(5), we define ''product'' to be ''any hardware or software for use in an incumbent LEC's network or in conjunction with an incumbent LEC's facilities that, when installed, could affect the compatibility of the network, facilities or services of an interconnected provider of telecommunications or information services with the incumbent LEC's network, facilities or services.''

217. We recognize that some network changes that affect interconnection, e.g., some location changes, may not require an incumbent LEC to make or buy any products. Disclosure of such changes, however, may be required under section 251(c)(5). For purposes of section 251(c)(5), therefore, we clarify that the ''make/buy'' point includes the point at which the incumbent LEC makes a definite decision to implement a network change in order to begin offering a new service or change the way in which it provides an existing service. Such a ''definite decision'' requires the incumbent LEC to move beyond exploration of the costs and benefits of a change or the feasibility of a change. Instead, a ''definite decision'' is reached when the incumbent LEC determines that the change is warranted, establishes a timetable for anticipated implementation, and takes the first step toward implementation of the change within its network.[488]

218. We recognize that many changes to an incumbent LEC's network that are subject to disclosure under section 251(c)(5) can be fully implemented less than twelve months after the make/buy point. Accordingly, if the service using the network changes can be initiated within twelve months after the make/buy date, public notice must be given on the make/buy date, but at least six months before implementation of the planned changes.

219. We agree with several commenters that competing service providers should not require a full six months to respond to some categories of relatively minor network changes and that we would needlessly slow the pace of technical advance were we to require a full six months notice in such a case. As evidence of this fact, several commenters have submitted or referred us to industry guidelines developed by ICCF, which detail recommended notice periods of 45 days to six months for certain network changes.[489] Based on the record before us, we agree that six months may be too long a minimum in some circumstances. We conclude, however, that neither the ICCF guidelines nor any other categorization scheme adequately encompasses every potential change affecting interconnection that an incumbent LEC may wish to make to its network. In addition, for changes that can be implemented in less than six months, the length of time required for notice to be considered ''reasonable'' may vary considerably based on advances in technology, the specific implementation plan developed by an incumbent LEC, the particular capabilities of interconnecting carriers to adapt, and the willingness of the incumbent LEC to be forthcoming with information. Based on these considerations, we find that a fixed timetable for such short-term notices would not be appropriate.

220. Accordingly, with respect to changes subject to section 251(c)(5) disclosure that the incumbent LEC wishes to implement on less than six months' notice, we require that the incumbent LEC's Commission filing, whether certification or public notice, also include a certificate of service: (1)

[484] The definition of the ''make/buy'' point for section 251(c)(5) purposes is discussed *infra* at paras. 216–217.

[485] Because the incumbent LECs control the vast majority of both facilities and customers in most markets, the impact of such difficulties, at least at present, would be felt most acutely by a competing service provider.

[486] *BOC Safeguards Order*, 6 FCC Rcd at 7603. The Commission has stated that, ''make/buy applies not only to a carrier's decision to make or buy products to implement a change in the network, but also to any decision to make or buy products that would rely on such changes.'' Phase II Order, 2 FCC Rcd at 3087. The precise definition of the ''make/buy'' point has been clarified in some detail. *See, e.g., id.; Phase I Order*, 104 F.C.C.2d at 1080–86; *Computer and Business Equip. Mfrs. Assoc. Petition for Declaratory Ruling Regarding Section 64.702(d)(2) of the Commission's Rules and the Policies of the Second Computer Inquiry*, Report and Order (''*CBEMA Order*''), 93 F.C.C.2d 1226, 1243–44 (1983).

[487] *Phase I Order*, 104 F.C.C.2d at 1084.

[488] *Cf. Phase II Order*, 2 FCC Rcd at 3087.

[489] ICCF *Recommended Notification Procedures*. *See supra* note 466.

Certifying that a copy of the incumbent LEC's public notice was served on each provider of telephone exchange service that interconnects directly with the incumbent LEC's network a minimum of five business days in advance of the filing; and (2) providing the name and address of all such providers of local exchange service upon which the notice was served. Such filings must be clearly titled ''Short Term Public Notice (or Certification of Short-Term Public Notice) Pursuant to Rule 51.333(a).''

221. The Commission will issue a public notice of such short-term filings separate from its public notice of other section 251(c)(5) filings. Unlike six-month or twelve-month notices, certain interested parties will have an opportunity to file objections to such short-term public notices. Specifically, short term notices will be deemed final on the tenth business day after the release of the Commission's public notice unless a provider of information services or telecommunications services that directly interconnects with the incumbent LEC's network files an objection to the change with the Commission and serves it on the incumbent LEC no later than the ninth business day following the release of the Commission's public notice. Such an objection must state: (1) Specific reasons why the objector is unable to implement adjustments to accommodate the incumbent LEC's changes by the date the incumbent LEC has specified, including specific technical information, questions, or other assistance required that would allow the objector to accommodate those changes; (2) specific steps the objector is taking to implement changes to accommodate the incumbent LEC's changes on an expedited basis; (3) the earliest possible date by which the objector anticipates that it can accommodate the incumbent LEC's changes, assuming it receives the assistance requested in item (1) (not to exceed six months from the date the incumbent LEC gave its original public notice); (4) the affidavit of the objector's president, chief executive officer, or other corporate officer or official with suitable authority to bind the corporation and knowledge of details of the objector's inability to adjust its network on a timely basis that he or she has read the objection, that the statements contained in it are true, that there is good ground to support the objection, and that it is not interposed for purposes of delay; and (5) any other information relevant to the objection. Because the power to interpose such objections could vest competing service providers with extensive power to delay implementation of changes, we caution competing service providers that we will not hesitate to intervene where necessary to ensure that objections are not posed merely to delay implementation of incumbent LEC network changes and that abuse of the Commission's processes for such a purpose would expose a competing service provider to sanctions.[490]

222. If one or more objections are filed, the incumbent LEC will have five additional business days (*i.e.*, until no later than the fourteenth business day following the release of the Commission's public notice) within which to file a response to the objection(s) and serve it on all objectors. Such a response shall: (1) Include information responsive to the allegations and concerns identified by objectors; (2) state whether the implementation date(s) proposed by the objector(s) would be acceptable; (3) indicate any specific technical assistance that the incumbent LEC is willing to give to the objector(s); and (4) state any other information relevant to the incumbent LEC's response. In the case of such contested short-term public notices, the Common Carrier Bureau will issue an Order fixing a reasonable public notice period. In the alternative, if the incumbent LEC does not file a response within the five-day time period allotted, or if the response accepts the latest date stated by an objector in response to item (3) of its objection, then the incumbent LEC's public notice shall be deemed amended to specify implementation on the latest date stated by an objector in item (3) of its objection without further Commission action.

223. At the make/buy point, incumbent LEC plans should be sufficiently developed that the incumbent LEC could provide adequate and useful information to competing service providers. At earlier stages of the planning process, options are still being explored and alternatives weighed. Disclosure at such an early stage could cause interconnecting carriers to waste resources in an effort to respond to network changes that may not occur or that occur ultimately in a significantly different way. As the process of implementing the planned changes into the network goes forward, specific information may also require revision. Accordingly, we require an incumbent LEC to keep its public notice information complete, accurate, and up-to-date in whatever forum it has chosen for disclosure.

[490] *See* 47 CFR 1.17, 1.52.

224. We agree with several commenters that incumbent LECs should not make preferential disclosure to selected entities prior to disclosure at the make/buy point. Accordingly, we prohibit disclosure to separate affiliates, separated affiliates,[491] or unaffiliated entities (including actual or potential competing service providers), until the time of public notice.

ii. Other Disclosure Proposals

225. We find that section 251(d)(3) does not require the Commission to preserve state authority over the timing of public notice of changes to the ''information necessary for the transmission and routing'' of traffic. Section 251(d)(3) prevents the Commission from ''preclud[ing] the enforcement of any (state commission) regulation, order or policy,'' to the extent that such regulation, order or policy ''establishes (LEC) access and interconnection obligations,''[492] is ''consistent with the requirements of (section 251)''[493] and does not ''substantially prevent implementation of this section and the purposes of this part.''[494]

226. Public notice requirements that varied widely from state to state could subject both incumbent LECs and potential competing service providers to burdensome, duplicative, and potentially inconsistent obligations that would impermissibly hamper the achievement of the goals of section 251. Such varied filings requirements would obligate incumbent LECs to file in, and potential interconnecting carriers to canvass, a multitude of state-level fora in order to glean information concerning network changes. Incumbent LECs that operate in multiple states could be required to disclose a single network-wide change piecemeal in a variety of state filings; interconnecting carriers would then need to retrieve the information, also piecemeal, from many different locations. Neither section 251(c)(5) nor a fixed disclosure timetable limits the range of network changes an incumbent LEC might make; rather incumbent LECs remain free to make any otherwise permissible change upon appropriate notice. Accordingly, particularly with respect to entities whose operations span several states, clear, national rules are essential to the uniform implementation of network disclosure.[495]

[491] 47 U.S.C. 274.

[492] 47 U.S.C. 251(d)(3)(A).

[493] 47 U.S.C. 251(d)(3)(B).

[494] 47 U.S.C. 251(d)(3)(C).

[495] *See* NCTA comments at 12.

227. Several commenters argue that a fixed disclosure timetable will needlessly or arbitrarily delay the introduction of technical advances or new services. It is our intention in this proceeding, however, to develop disclosure rules that minimize unnecessary delay by providing competing service providers with adequate, but not excessive, time to respond to changes to an incumbent LEC's network that affect interconnection. The primary concern reflected in section 251(c)(5) is continued interconnection and interoperability. If proper planning occurs, however, the delay associated with this goal should be minimal.

228. At least one commenter argues that, because incumbent LECs and competing service providers have a common interest in ensuring that their networks function together properly—an interest that removes incentives to withhold vital interconnection information and obviates the need for fixed, enforceable advance disclosure obligations [496]—any fixed timetables for disclosure should be negotiated between carriers as part of individual interconnection agreements. We disagree. The mere fact that interconnection failures can adversely affect both an incumbent LEC and a competing service provider does not remove the incumbent LEC's incentives to delay release of information concerning network changes solely in order to inconvenience its competitors. The impact of such failures would fall disproportionately on the competing service provider because, at least in the near term, the incumbent LEC's network will connect most of the customers in its service area directly, without using any facilities of a competing service provider. Indeed, we believe that this is the reason that Congress chose to place this obligation on incumbent LECs only and not on all LECs. In addition, notice of network changes provided to an interconnecting carrier, pursuant to a privately negotiated agreement, will not necessarily be provided to members of the *public* who are not parties to the specific agreement.[497] Accordingly, while carriers may negotiate individual notice arrangements (consistent with the preferential disclosure prohibitions discussed in paragraph 224, above) as part of private interconnection agreements, we are unable to rely on such private notice to satisfy section 251(c)(5)'s duty to provide reasonable *public* notice.

229. Although advance disclosure periods will place competing service providers on notice of certain products and services the incumbent LECs intend to bring to market, we do not believe that this information will automatically translate into a competitive advantage for the competing service providers. The incumbent LEC's network disclosure obligations are intended to allow competing service providers to make required changes to their own networks in order to maintain interoperability and uninterrupted, high quality service to the public. These obligations are designed to prevent incumbent LECs from using their currently substantial percentages of subscribers and highly developed networks anticompetitively to prevent the entry of potential competitors.

230. Several commenters have argued that existing practices under industry issued, ICCF guidelines [498] or the Commission's ''all carrier'' rule,[499] satisfy the requirements of section 251(c)(5) and that no further Commission action is necessary. We disagree. The guidelines that commenters bring to our attention are neither compulsory nor enforceable at the Commission. We cannot rely on continued goodwill among carriers that soon may be locked in competition to assure timely disclosure of network changes. Similarly, we cannot trust in the ''mutually satisfactory arrangements for timely information exchange'' that GVNW alleges IXCs and small LECs reached to ease the conversion to equal access.[500] Our new rules, and the new market dynamics, may not produce such agreements.

231. While we are aware of no specific complaints concerning the functioning of the ''all carrier rule,'' the advent of competition for basic telephone service in the local market will require rules that are specific, easily enforced and very clear. In this respect, we believe that the all carrier rule standard lacks adequate specificity to function efficiently in the section 251 context. Requiring carriers to litigate the meaning of ''reasonable'' notice through our complaint process on a case-by-case basis might slow the introduction and implementation of new technology and services, and burden both carriers and the Commission with potentially lengthy, fact-specific enforcement proceedings. A fixed timetable will create a clear, specific standard that will be more easily and quickly enforceable and that will better facilitate the development of competition and serve the public interest.

232. At least one commenter urges us to adopt the *Computer III* timetable merely as a ''safe harbor'' provision.[501] If we were to do so, however, we would open the notice process to many of the same risks that lead us to reject the all carrier rule. Under ''safe harbor'' rules, competing service providers' notice complaints could become bifurcated into an initial inquiry as to whether an incumbent LEC met the safe harbor provisions of the timetable. If the answer were in the negative, a second, fact-specific inquiry as to whether notice was nevertheless reasonable, would then follow. The delay in resolving such disputes would not serve the public interest. We believe the better course is to adopt a binding, fixed standard applicable to notice by all incumbent LECs.

233. MFS's proposed regulatory structure based on a tripartite scheme, classifying changes as ''major,'' ''location,'' or ''minor,'' subject to advance disclosure of 18 months, 12 months, and according to industry standards, respectively, is flawed in several respects. Initially, section 251(c)(5) disclosure applies to a broad spectrum of potential network changes and we are not confident that MFS's definitions, or any similar definitions, could adequately capture and clarify every potential alteration affecting interconnection that an incumbent LEC could make to its network. Categorization debates would inevitably arise among carriers concerning the status of specific, planned changes. Reasonable public notice is a function of the length of time an incumbent LEC will take to implement a change and the length of time an interconnecting carrier will need to respond. Fixed 18-month and 12-month disclosure periods will not be flexible enough to take advantage of advances in technology that may permit increasingly rapid implementation of and reaction to network changes. Also, we find that the extended notice periods MFS proposes are too long. MFS provides no evidence or explanation to support its assertion that competing service providers will need a minimum of 18 months notice of major changes,[502] and the record

[496] Ameritech comments at 30, reply at 17.

[497] Although the contents of privately negotiated interconnection agreements themselves must be disclosed to the public through state level filings, *see* 47 U.S.C. 252(h), information exchanged pursuant to the terms of such an interconnection agreement might not be provided at all to this Commission, state commissions or the public.

[498] ICCF *Recommended Notification Procedures. See supra* note 466.

[499] *See supra* n.383.

[500] GVNW comments at 5.

[501] PacTel comments at 6.

[502] *Cf.* NYNEX reply at 10–11 (Such a long notice period would ''hamstring technological progress

contains broad support for the 12 month notice period from Computer III.[503] While we intend that competing service providers have adequate notice of planned network changes, we acknowledge the valid concerns of some commenters that overextended advance notification intervals could needlessly delay the introduction of new services, provide the interconnecting carrier with an unfair competitive advantage, or slow the pace of technical innovation.[504]

iii. Application to Network Changes in Progress

On the effective date of the rules implementing incumbent LECs' network disclosure obligations under section 251(c)(5), some incumbent LECs may be implementing network changes that the new rules otherwise would have required them to disclose. With respect to these changes, we do not perceive a need to delay implementation, and no commenter has requested that we do so. We do require, however, that incumbent LECs give public notice of such changes as soon as it is practical, and that notice in accordance with the section 251(c)(5) network disclosure rules be given: (1) before the incumbent LEC begins offering service using the changes to its network; and (2) no later than 30 days after the effective date of the rules adopted in this Order.

235. We similarly find no need to adopt rules obligating incumbent LECs to make any formal, initial public disclosure of comprehensive information concerning their networks to provide background information against which connecting carriers could then evaluate changes. In the *First Report and Order,* we have concluded that, under section 251(c)(2), incumbent LECs are under an obligation to provide, interconnection for purposes of transmitting and routing telephone exchange traffic alone, exchange access traffic alone, or both.[505] Implicit in this obligation under section 251(c)(2) is the obligation to make available to requesting carriers information indicating the location and technical characteristics of incumbent LEC network facilities. Accordingly, actual or potential competing service providers needing this type of baseline information may request it from the incumbent LEC under section 251(c)(2); subsequent changes to this information will be addressed by the section 251(c)(5) rules we adopt today.

iv. Small Business Considerations

236. We have considered the impact of our rules on small incumbent LECs. We agree with GVNW that many network changes may not require twelve months advance disclosure. Accordingly, we have provided for six month, or shorter, notice periods, when such changes can be accomplished quickly. In addition, we note that, under section 251(f)(1), certain small incumbent LECs are exempt from our rules until (1) they receive a *bona fide* request for interconnection, services, or network elements; and (2) their state commission determines that the request is not unduly economically burdensome, is technically feasible, and is consistent with the relevant portions of section 254. In addition, certain small incumbent LECs may seek relief from our rules under section 251(f)(2).[506]

C. Relationship With Other Public Notice Requirements and Practices.

1. Relationship of Sections 273(c)(1) and 273(c)(4) With Section 251(c)(5).

a. Background

237. Section 273(c)(1) requires each BOC to maintain and file with the Commission ''full and complete information with respect to the protocols and technical requirements for connection with and use of its telephone exchange facilities,'' in accordance with Commission rules.[507] Section 273(c)(4) obligates the BOCs to provide timely information on the planned deployment of telecommunications equipment to interconnecting carriers providing telephone exchange service.[508] We sought comment in the *NPRM* on the relationship between these sections and the network disclosure obligations contained in section 251(c)(5).[509]

b. Comments

238. Ameritech states that the requirements of section 251(c)(5) ''should be reconciled with [the] related obligations'' set forth in section 273(c)(1) and 273(c)(4).''[510] Bell Atlantic suggests that sections 251(c)(5) and 273(c)(1) cover the same type of technical information.[511] Bell Atlantic further recommends that we find that ''timely'' release of the information covered by section 273(c)(4) means that the information should be made available ''a sufficient time in advance that the competing service providers may make any necessary changes to their networks.''[512] SBC comments that the disclosure obligations imposed by sections 251(c)(5), 273(c)(1), and 273(c)(4) are ''substantially similar.''[513] MCI argues that section 273(c)(1) imposes on the RBOCs substantially the same information disclosure obligations that 251(c)(5) imposes on the incumbent LECs in general, with the exception that 273(c)(1) explicitly obligates the RBOCs to file the information with the Commission.[514] MCI further argues that section 273(c)(4)'s ''timely'' disclosure requirement goes beyond that contained in section 251(c)(5).[515]

239. USTA suggests that ''there is no basis to impose different requirements on the BOCs for purposes of compliance with section 273(c)(1) than those they are required to follow for section 251(c)(5). This is in fact one area in which uniformity would provide a benefit to the industry and would be administratively simple.''[516] In contrast, the Rural Tel. Coalition argues that the requirements of section 273 apply only to the BOCs and ''are not expected to correlate with the requirements of 251(c)(5) that apply to all incumbent LECs.''[517] The Rural Tel. Coalition states that the Commission should fashion flexible notice requirements under these sections, recognizing differences in size, market power, and ability to impact competing service providers' operations that exist among the BOCs and independent LECs, and competing service providers.[518] AT&T also disagrees with USTA, arguing that the Commission filing contemplated by section 273(c)(1) is more detailed than

and deny customer benefits''); U S WEST reply at 2–3.

[503] *See, e.g.,* AT&T comments at 24–25 (Noting that the time periods from *Computer III* are familiar to incumbent LECs and a one-year minimum for certain changes would be sufficient advance notice to alternative LECs); MCI comments at 16 (agreeing 12 months advance notice is sufficient); Cox comments at 11 (''The proposal in the [*NPRM*] represents the minimum possible standard for disclosure'').

[504] *Cf. Phase II Order,* 2 FCC Rcd at 3087 (''[W]hile we believe enhanced service providers are entitled to receive network information on a timely basis, we are also concerned that premature disclosure of this information could impair carriers' development efforts and inhibit network innovation'').

[505] *First Report and Order* at section IV.

[506] For a discussion of the implications and operation of section 251(f), *see First Report and Order,* section XII.

[507] 47 U.S.C. 273(c)(1). The Commission will address section 273 in a separate rulemaking proceeding.

[508] 47 U.S.C. 273(c)(4).

[509] *NPRM* at para. 193.

[510] Ameritech comments at 31.

[511] Bell Atlantic comments at 12.

[512] *Id.* Bell Atlantic advocates the same ''reasonable advance notice'' standard for use in connection with section 251(c)(5).

[513] SBC comments at 13–14.

[514] MCI comments at 19.

[515] *Id.*

[516] USTA comments at 13.

[517] Rural Tel. Coalition comments at 4.

[518] *Id.* at 4–5.

the disclosure mandated in section 251(c)(5).[519]

c. Discussion

240. Because the BOCs clearly meet the 1996 Act's definition of an ''incumbent LEC,'' [520] the minimum disclosure requirements of section 251(c)(5) apply to the BOCs. We will address the specific implications of section 273, including the question whether section 273 imposes additional disclosure requirements on the BOCs, in a separate rulemaking proceeding.

2. Relationship of Sections 251(a) and 251(c)(5) With Section 256

a. Background

241. Section 251(a) sets forth general duties of telecommunications carriers, including the duty to interconnect directly or indirectly with the facilities and equipment of other telecommunications carriers, and the duty not to install network features, functions or capabilities that do not comply with the guidelines and standards established pursuant to section 255 [521] and 256.[522] Section 251(c)(5) sets forth the duty of all incumbent LECs to provide reasonable public notice of changes in the information necessary for the transmission and routing of services using the incumbent LEC's network.[523] The goal of section 256, entitled ''Coordination for Interconnectivity,'' is ''to promote nondiscriminatory accessibility by the broadest number of users and vendors of communications products and services to public telecommunications networks used to provide telecommunications service'' and defines the Commission's role in achieving this goal.[524] In the *NPRM,* we sought comment on the relationship of sections 251(a) and 251(c)(5) with section 256.[525]

b. Comments

242. We received few comments on this issue. USTA states that, ''in developing oversight procedures for public telecommunications network interconnectivity standards under Section 256, the Commission can assist in alerting the industry to general types of technology changes which may lead to specific upgrades or modifications by individual carriers.'' [526] In addition, USTA notes that all telecommunications carriers are obligated by section 251(a)(2) to comply with standards prescribed under sections 255 and 256 and, accordingly, cautions that the section 256 process should be conducted with carriers' section 251(a)(2) obligations in mind.[527] USTA therefore suggests the possibility that an industry group could develop a set of uniform guidelines for use by all carriers in providing notice of changes that could affect interconnection or interoperability.[528]

243. Ameritech comments that section 251(c)(5) is only one part of the overall regulatory structure for coordinating network planning by the industry and facilitating interconnection and interoperability.[529] Based on this analysis, Ameritech argues that the notification obligations section 251(c)(5) imposes should be extended to all LECs under section 256.[530]

c. Discussion

244. Section 251(a)(2) imposes a duty on all telecommunications carriers to act in ways that are not inconsistent with any guidelines and standards established under section 256. Section 251(c)(5) imposes network disclosure obligations on incumbent LECs that are related to the goals of section 256, inasmuch as section 251(c)(5) sets forth one specific procedure to promote interconnectivity. We do not decide here whether compliance with section 251(c)(5) is sufficient to satisfy section 256, however. The Network Reliability and Interoperability Council will develop recommendations to the Commission on the implementation of section 256.[531] We intend to address carrier and Commission obligations under section 256 in a future rulemaking proceeding.

D. Enforcement and Safeguards

1. Enforcement Mechanisms

a. Background and Comments

245. In the *NPRM,* we sought comment on what enforcement mechanism, if any, we should use to ensure compliance with the section 251(c)(5) public notice requirement.[532] Bell Atlantic, in conjunction with its advocacy of a flexible disclosure standard based on ''reasonableness,'' suggests that the Commission review complaints of premature implementation on a case-by-case basis and, where necessary, issue cease-and-desist orders.[533] Ameritech and GTE argue that no specific, additional enforcement mechanisms are necessary, because there is no evidence that existing industry practices are producing network conflicts or hardships, or are otherwise not working.[534] U S WEST suggests that, if carriers fail to make timely disclosure, additional enforcement options can be considered in the future.[535] In contrast, NCTA states that we must adopt meaningful sanctions to enforce our new network disclosure rules, including significant monetary sanctions whenever a competitor's service is disrupted because of an incumbent LEC's failure to comply with the notice requirements.[536] Cox argues that any incumbent LEC found to violate section 251(c)(5)'s disclosure requirements should be required to inform all affected customers of interconnecting carriers that the incumbent LEC's actions caused any adverse effects attributable to the improperly disclosed network changes.[537]

246. MFS states that the Commission should adopt rules that would: (1) Require each incumbent LEC to respond to Commission questions regarding the information previously made available regarding any network changes within the scope of section 251(c)(5), and to supplement the information if requested by the Commission; (2) establish a procedure for temporarily blocking any proposed network change until the Commission has time to investigate any alleged violations, with respect to either provision of notice, or the nature of the network change; and (3) allow the Commission, for good cause, to issue an order, without prior notice or hearing, requiring an incumbent LEC to cease and desist from making any specified changes for a period of up to 60 days to permit Commission investigation of alleged violations.[538] Time Warner

[519] AT&T comments at 24, reply at 28.

[520] 47 U.S.C. 251(h).

[521] Section 255, ''Access by Persons with Disabilities,'' will be addressed in a separate rulemaking proceeding.

[522] 47 U.S.C. 251(a).

[523] 47 U.S.C. 251(c)(5).

[524] 47 U.S.C. 256.

[525] *NPRM* at para. 193.

[526] USTA comments at 13.

[527] *Id.* at 13–14.

[528] *Id.* at 14.

[529] Ameritech comments at 31.

[530] *Id.*

[531] At its meeting on July 15, 1996, the Network Reliability and Interoperability Council discussed (1) barriers to interconnectivity; (2) how the FCC most efficiently can oversee network planning to assure interoperability; (3) need for standards-setting; and (4) the overall reliability of networks. *See Communications Daily,* June 11, 1996 (announcing July 15 meeting); *Public Notice, NYNEX CEO Seidenberg to Head New Network Reliability and Interoperability Council,* 1996 WL 185795 (F.C.C. April 18, 1996).

[532] *NPRM* at para. 193.

[533] Bell Atlantic comments at 12.

[534] Ameritech comments at 29; GTE reply at 10.

[535] U S WEST reply at 3.

[536] NCTA comments at 12.

[537] Cox comments at 12.

[538] MFS comments at 16. MFS does not explain what type of network change might require Commission investigation or what type or level of

suggests that any failure to comply with the rules we establish should be addressed through our existing section 208 complaint process.[539]

b. Discussion

247. It is essential to the development of local competition that incumbent LECs comply with the network disclosure obligations of section 251(c)(5). Even if a competing provider of local exchange service had made significant inroads into the incumbent LEC's customer base, it would have to transmit a substantial number of its customers' calls to the incumbent LEC's network for termination. If these calls cannot be terminated reliably, customers will be more reluctant to use the competing provider's services.

248. We recognize the importance of compliance with our network disclosure rules, and note that many of the specific enforcement sanctions offered by commenters may have merit. The commenters' suggestions indicate a belief that the Commission should delay or prohibit the implementation of changes if we receive sufficiently credible allegations of notice violations. Our existing enforcement authority would permit us to impose such a sanction and we will not hesitate to do so in appropriate circumstances. The Commission, however, also has a range of other penalties it could impose to ensure incumbent LEC compliance with the network disclosure rules. The record currently before us does not reveal a need for us to mandate specific enforcement procedures in the section 251(c)(5) context. Rather, we will intervene in appropriate ways if necessary to ensure adequate disclosure of public notice information, should sanctions become necessary to encourage full compliance with our network disclosure rules.[540] In addition, we intend to explore how we can increase the efficiency of the current section 208 formal complaint process in a separate rulemaking proceeding.

2. Protection of Proprietary Information, Network and National Security

a. Background and Comments

249. In the *NPRM*, we sought comment on the extent to which safeguards may be necessary to ensure that information regarding network security, national security and the proprietary interests of manufacturers and others is not compromised by the section 251(c)(5) network disclosure process.[541]

250. BellSouth states that, to address these concerns, the Commission should permit disclosing incumbent LECs to require the recipient of such information to execute a confidentiality agreement, which could be drafted to include liquidated damages, indemnification, or other appropriate remedial provisions.[542] In addition, BellSouth requests that the Commission confirm that incumbent LECs are not obligated to disclose proprietary information of third parties, but may instead require competing service providers to negotiate directly with the third party for access.[543]

251. GVNW suggests that we limit incumbent LEC disclosure only to references to industry and manufacturers' specifications that are widely available, and to other information required to interconnect at the interface, which would reduce the amount of proprietary or sensitive information that would be subject to disclosure.[544] In addition, GVNW and the Rural Tel. Coalition state that an incumbent LEC should not be obligated to disclose the specific location of physical plant facilities except under strict nondisclosure agreements, in order to preserve the LEC's competitive position and protect against potential terrorist disruptions.[545]

252. Noting that the telecommunications equipment market is competitive, Nortel states that a manufacturer would be seriously disadvantaged if its proprietary information were disclosed to competitors.[546] In addition, Nortel argues that, in such a case, manufacturers would face substantially reduced incentives to develop advanced products.[547] Motorola, Inc., expresses its agreement with both BellSouth and Nortel[548] and comments that disclosure of proprietary information may undermine the competitive position of U.S. manufacturers in the global market.[549] Motorola, Inc., also asks us to clarify that no disclosure is required of technical information at ''testing'' or ''trial'' stages,[550] where typically a carrier is evaluating new technology in the field.[551]

253. Sprint, in *ex parte* comments, states that nondisclosure agreements related to the marketing of new services that will be available from both carriers may be appropriate.[552] Sprint also notes, however, that many routine network upgrades, such as establishment of new central offices, remote offices, or tandems, elimination of tandem locations, changes in the incumbent LEC's SS 7 network, and basic software upgrades, may not require the use of nondisclosure agreements.[553] While agreeing that network and national security issues deserve the highest attention, Teleport expresses concern that proprietary interest claims could be used to keep essential network interconnection information from potential competitors.[554]

b. Discussion

254. Having reviewed the record, we conclude that the judicious use of nondisclosure agreements will help protect incentives to develop innovative network improvements, and will also protect against potential threats to both national and network security by limiting the flow of detailed information concerning the operation of the national telecommunications network.[555] Accordingly, we will permit the use of nondisclosure agreements, subject to certain restrictions.

255. Incumbent LECs have a statutory obligation to provide ''reasonable public notice of changes in the information necessary for the transmission and routing of services using that (incumbent LEC's) facilities or network, as well as of any other changes that would affect the interoperability of those facilities and networks,'' [556] as defined in this proceeding. Under another provision of the 1996 Act, however, the BOCs and any entities that they own or otherwise control must protect ''the proprietary information submitted for procurement decisions from release not specifically authorized by the owner of such information.'' [557] Thus a rule requiring a BOC to provide

allegations we should considered sufficient in issuing cease and desist orders.

[539] Time Warner comments at 11.

[540] *See, e.g.*, 47 U.S.C. 154(i), 154(j), 206–209, 218; 47 CFR 0.91, 0.291.

[541] *NPRM* at para. 194.

[542] BellSouth comments at 5. *See* Illinois Commission comments at 63.

[543] *Id*. at 6.

[544] GVNW comments at 5. Ameritech advocates a similar narrowing of the disclosure obligation. Ameritech comments at 26 n.52.

[545] *Id.;* Rural Tel. Coalition comments at 4.

[546] Nortel comments at 3; Motorola, Inc. reply at 5. Citing similar concerns, GTE urges us to strike a balance between the information necessary to ensure seamless interconnection and the protection of proprietary information. GTE comments at 6.

[547] *Id*.

[548] Motorola, Inc. comments at n.4.

[549] Motorola, Inc. reply at n.5.

[550] *Id*. at 6.

[551] *Id*.

[552] *Ex parte* letter from Jay C. Keithley, Sprint, to Mr. William F. Caton, Acting Secretary, Federal Communications Commission, filed in CC Docket No. 96–98, June 26, 1996, at 2.

[553] *Id*.

[554] Teleport comments at 12.

[555] Should these agreements prove inadequate for this purpose, we would revisit this issue.

[556] 47 U.S.C. 251(c)(5).

[557] 47 U.S.C. 273(e)(5).

change information publicly, without any provision for the use of a nondisclosure agreement, could place a BOC in the position of having to choose between compliance with the Commission's rule and compliance with section 273(e)(5). We also find that requiring disclosure to the public of competitively sensitive, proprietary, or trade secret information without allowing for the possible use of nondisclosure agreements would be inconsistent with section 251(c)(5)'s requirement that incumbent LECs provide ''*reasonable* public notice'' (emphasis added). It would not be ''reasonable'' to require such disclosures because they have significant implications with respect to network and national security, as well as the development of competition and innovative network improvements. Accordingly, we find that section 251(c)(5) requires incumbent LECs to provide notice of planned changes to the public sufficient to allow an interested party to assess the possible ramifications of the change and evaluate whether it needs to seek disclosure of additional information. The five categories of information disclosure we mandate here will meet this standard.

256. We do not anticipate that the minimum public notice requirements we are adopting will obligate carriers to disclose competitively sensitive, proprietary, or trade secret information in the public arena. In addition, despite the concerns of Motorola, Inc., Nortel, and others, we do not anticipate that the level of information required by a competing service provider either to transmit and to route services, or to maintain interoperability will, in the ordinary case, include proprietary information. In the event that such information is required, however, an incumbent LEC's public notice must nevertheless identify the type of change planned in sufficient detail to place interested persons on notice that they may potentially be affected, and must state that the incumbent LEC will make further information available to persons signing a nondisclosure agreement. We believe that suitably fashioned nondisclosure agreements can appropriately balance the competing service provider's need for knowledge of network changes with the interests of the incumbent LEC and equipment manufacturers in retaining control of proprietary information.

257. Accordingly, to the extent that otherwise proprietary or confidential information of an incumbent LEC falls within the scope of the network disclosure obligation of section 251(c)(5), it must be provided by that incumbent LEC on a timely basis. If an interconnecting carrier or information service provider requires genuinely proprietary information belonging to a third party in order to maintain interconnection and interoperation with the incumbent LEC's network, the incumbent LEC is permitted to refer the competing service provider to the owner of the information to negotiate directly for its release. While the incumbent LEC might represent the most expedient source of the required information, third parties would be less able to protect themselves from misuse of their proprietary information and preserve potential remedies if the incumbent LEC were to disclose directly a third party's proprietary information directly in response to a request.

258. We are concerned that protracted negotiation periods over the terms of a suitable nondisclosure agreement, or the payment of fees or royalties, could consume a significant portion of a competing service provider's notice period. The rules we adopt today require that, except under short-term public notice procedures, an incumbent LEC must give public notice of network changes a minimum of either six months or twelve months in advance of implementation. We find that these periods will provide adequate notice to interconnecting carriers and information service providers, to ensure that a high level of interconnectivity and interoperability can be maintained between networks. These periods, however, are not excessive and will not allow excessive time for the negotiation of the terms of nondisclosure agreements. Because section 251(c)(5) places an affirmative obligation on the incumbent LEC to ensure reasonable public notice of changes to its network, we require that disclosure of information designated by the incumbent LEC as proprietary, whether owned by the incumbent LEC or a third party, be accomplished on appropriate terms as soon as possible after an actual or potential competing service provider makes a request to the information owner for disclosure. Specifically, upon receipt by the incumbent LEC of a competing service provider's request for disclosure of confidential or proprietary information, the applicable public notice period will be tolled to allow the interested parties to agree on suitable terms for a nondisclosure agreement. This tolling is consistent with the incumbent LEC's public notice obligations and will preserve the competing service provider's ability to implement required changes in its own network to accommodate those planned by the incumbent LEC. In accordance with its obligation to keep the public notice information complete, accurate, and up-to-date, the incumbent LEC must, if necessary, amend its public notice: (1) On the date it receives a request from a competing service provider for disclosure of confidential or proprietary information, to state that the notice period is tolled; and (2) on the date the nondisclosure agreement is finalized, to specify a new implementation date.

259. Given these incentives, we conclude that it is unnecessary either to adopt a precise definition of ''competitively sensitive'' or ''proprietary'' information, or to mandate the terms of nondisclosure agreements. The *Computer III* rules, upon which we have modeled the disclosure timetable for use in the section 251(c)(5) context, explicitly permit the use of nondisclosure agreements in connection with carrier disclosure of planned changes to the enhanced services industry at the ''make/buy'' point.[558] In that proceeding also, the Commission explicitly rejected requests to prescribe a specific type of agreement, instead holding that:

> we do not think it necessary or helpful for us to dictate the terms of these private agreements. Nondisclosure agreements are widely used in telecommunications, as well as in other fields. We believe it better to leave the exact specifications of the terms of such agreement to the parties. We would of course be prepared to intervene should parties bring to our attention evidence of noncompliance with the requirements established in this proceeding.[559]

Although we recognize that legitimate concerns exist regarding the security of proprietary information, the potential exists for some incumbent LECs to use such concerns as either a shield against the entry of competitors into their markets, or a sword to hamper the competitor's business operations. We emphasize that incumbent LECs are required to provide adequate access to even proprietary information if a competing service provider needs that information to make adjustments to its network to maintain interconnection and interoperation.

260. We agree with Motorola, Inc., that market and technical trials are not subject to disclosure under section 251(c)(5). Trials are not considered regular service and, because the validity of the incumbent LEC's trial results rests, in part, on successful interconnection, the incumbent LEC has sufficient incentives ensure that competing service providers receive

[558] *Phase II Order*, 2 FCC Rcd at 3092.

[559] *Id.* at 3092–93.

adequate information. Notice of trials may be given, as needed, on a private, contractual basis.

V. Numbering Administration

261. The Commission has repeatedly recognized that access to telephone numbering resources is crucial for entities wanting to provide telecommunications services because telephone numbers are the means by which telecommunications users gain access to and benefit from the public switched telephone network.[560] In enacting the 1996 Act, Congress also recognized that ensuring fair and impartial access to numbering resources is a critical component of encouraging a robustly competitive telecommunications market in the United States. Congress has required the Commission to designate an impartial administrator of telecommunications numbering and has conferred upon the Commission exclusive jurisdiction over those portions of the North American Numbering Plan (NANP) that pertain to the United States.[561]

A. Designation of an Impartial Number Administrator

1. Background

262. Section 251(e)(1) requires the Commission to ''create or designate one or more impartial entities to administer telecommunications numbering and to make such numbers available on an equitable basis.'' [562] In the *NPRM*, we tentatively concluded that action taken by the Commission in its July 1995 *NANP Order* satisfied this requirement.[563] In that *Order*, the Commission directed that functions associated with NANP administration be transferred to a new administrator of the NANP, unaligned with any particular segment of the telecommunications industry. In the *NPRM*, we sought comment on whether this action satisfied the section 251(e)(1) requirement that we designate an impartial administrator.

2. Comments

263. There is nearly unanimous agreement that action taken by the Commission in the *NANP Order* satisfies the requirement of Section 251(e)(1).[564] GTE states that the *NANP Order* ''will ensure that numbering mechanisms are applied in a carrier-neutral fashion, consistent with the objectives of the 1996 Act.'' [565] Parties, contending that number administration now performed by Bellcore potentially disadvantages non-BOC providers of telecommunications services by delay or denial of numbering resources to them, nevertheless urge the Commission to move quickly to implement the *NANP Order* fully.[566] Moreover, some argue that to give the *NANP Order* full effect, the North American Numbering Council (NANC) must be convened promptly.[567] CTIA states that until that time, ''contentious numbering issues will either go unresolved, leading to additional pressure on already burdened numbering resources, or these issues will be resolved by the remnant of a monopoly era system.'' [568] One commenter, Beehive, argues that the *NANP Order* does not meet the requirements of section 251(e)(1) because it does not address toll free number administration.[569]

3. Discussion

264. We conclude that the action taken in the *NANP Order* satisfies the section 251(e)(1) requirement that the Commission create or designate an impartial numbering administrator. The *NANP Order* requires that functions associated with NANP administration be transferred to a new NANP administrator. In the *NANP Order*, the Commission articulated its intention to undertake the necessary procedural steps to create the NANC.[570] Additionally, it directed the NANC to select as NANP administrator an independent, nongovernment entity that is not closely associated with any particular industry segment.[571] These actions satisfy section 251(e)(1).

265. Commenters' arguments that we have not fulfilled our duty pursuant to section 251(e)(1) because the NANC has not been convened and has not selected a new NANP administrator are not persuasive. In the *NANP Order*, we required that there be a new, impartial number administrator and established the model for how that administrator will be chosen. We thus have taken ''action necessary to establish regulations'' leading to the designation of an impartial number administrator as required by section 251(e)(1).

266. We disagree with Beehive's contention that the *NANP Order* does not meet the requirements of section 251(e)(1) because it does not address toll free number administration. In the *NANP Order*, we directed the NANC to provide recommendations on the following question: ''What number resources, beyond those currently administered by the NANP Administrator should the NANP Administrator administer?'' [572] Our purpose in directing NANC to address this question was to develop a record with respect to commenters' suggestions that the new administrator assume additional responsibilities beyond those of the current NANP administrator, if necessary, to facilitate competition in telecommunications services. By asking this question and seeking recommendations from the NANC, we set into motion a process designed to foster competition in *all* telecommunications services, including toll free, through neutral numbering administration. While the *NANP Order* outlines broad objectives for number administration for all telecommunications services, the specific details of implementation for toll free services are addressed in the ongoing toll free proceeding, CC Docket No. 95–155.

B. Delegation of Numbering Administration Functions

267. In this section, we address the role of state public utility commissions in numbering administration. We authorize states to perform the task of implementing new area codes subject to our numbering administration guidelines contained in the *Ameritech Order* and further clarified in this *Order*. We also incorporate the petition for declaratory ruling, the application for review, and the record in that proceeding and address the Texas Commission's pleadings regarding its

[560] *See Administration of the North American Numbering Plan*, CC Docket No. 92–237, Report and Order, 11 FCC Rcd 2588, 2591 (1995) (*NANP Order*) 60 FR 38737 (July 28, 1995).

[561] 47 U.S.C. 251(e)(1).

[562] *Id.*

[563] *See NANP Order*. The *NANP Order* was initiated in response to Bellcore's stated desire to relinquish its role as NANP administrator. *See* Letter from G. Heilmeier, President and CEO, Bellcore to the Commission (August 19, 1993). Bellcore, however, will continue performing its NANP Administration functions until those functions are transferred to a new NANP administrator pursuant to the *NANP Order*.

[564] *See, e.g.*, Ameritech comments at 22; District of Columbia Commission comments at 1; GCI comments at 5; NYNEX comments at 18; AT&T reply at 2–3.

[565] *See, e.g.*, GTE reply at 34.

[566] *See, e.g.*, CTIA comments at 4; MCI comments at 10.

[567] *See, e.g.*, AT&T comments at 11. The North American Numbering Council (NANC) is a Federal Advisory Committee created for the purpose of addressing and advising the Commission on policy matters relating to administration of the NANP. NANC will provide the Commission advice reached through consensus to foster efficient and impartial number administration.

[568] *See, e.g.*, CTIA comments at 4.

[569] Beehive comments at 2–4.

[570] *NANP Order*, 11 FCC Rcd at 2608.

[571] *Id.* at 2610, 2614, 2617.

[572] *Id.* at 2610.

plan for area code relief in Dallas and Houston which includes wireless overlays. We view prompt examination of the Texas Commission's plan as necessary because the area codes currently assigned to these cities have already reached exhaust.[573]

1. Delegation of Matters Related to Implementation of New Area Codes

a. Background

268. Section 251(e)(1) confers upon the Commission ''exclusive jurisdiction over those portions of the North American Numbering Plan that pertain to the United States,'' but states that ''(n)othing in this paragraph shall preclude the Commission from delegating to state commissions or other entities all or any portion of such jurisdiction.'' [574] In response to this provision, the Commission tentatively concluded in the *NPRM* that it should authorize state commissions to address matters involving the implementation of new area codes so long as they act consistently with the Commission's numbering administration guidelines.[575]

b. Comments

269. Most parties contend that the Commission should ''retain (its) plenary authority over all facets of (numbering) administration with delegation to states of only certain limited functions.'' [576] PageNet urges that any delegation ''should be clearly defined as to scope, review standards, and decision time limits.'' [577] Similarly, Time Warner recommends that any such delegation be accomplished in conformity with the Commission's guidelines.[578] Bell Atlantic/NYNEX Mobile, while stating that states may be in the best position to implement area code relief tailored to the particular needs of their residents, warns that the Commission must intervene promptly when any state ''departs from federal numbering policies prohibiting discrimination against any type of carrier.'' [579]

270. While some commenters argue that the *Ameritech Order* strikes a ''proper jurisdictional balance,'' permitting state commissions to make initial determinations regarding area code administration, subject to Commission review,'' others request further clarification of the federal and state role in numbering.[580] The Texas Commission specifically requests that the ''FCC clarify the states' roles in number administration by expanding on statements in the *Ameritech Order* and elsewhere regarding the balance of authority between the FCC and the states.'' [581]

c. Discussion

271. We retain our authority to set policy with respect to all facets of numbering administration in the United States. By retaining authority to set broad policy on numbering administration matters, we preserve our ability to act flexibly and expeditiously on broad policy issues and to resolve any dispute related to numbering administration pursuant to the 1996 Act. While we retain this authority, we note that the numbering administration model established in the *NANP Order* will allow interested parties to contribute to important policy recommendations.

272. We authorize the states to resolve matters involving the implementation of new area codes. State commissions are uniquely positioned to understand local conditions and what effect new area codes will have on those conditions. Each state's implementation method is, of course, subject to our guidelines for numbering administration, including the guidelines enumerated in the *Ameritech Order* and in this *Order* as detailed below. We note that this authorization for states to resolve matters involving implementation of new area codes is effective immediately. Because of the need to avoid disruption in numbering administration, there is good cause for this action pursuant to 5 U.S.C.553(d)(3). Some states have implemented new area codes prior to our release of this order. We ratify their actions insofar as they are consistent with these guidelines.

2. Area Code Implementation Guidelines

a. Background

273. When almost all of the central office (CO) codes in an area code are consumed, a new area code must be assigned to relieve the unmet demand for telephone numbers. Prior to the enactment of the 1996 Act, state commissions approved plans developed and proposed by the LECs, as CO code administrators, for implementing new area codes. New area codes can be implemented in three ways. Traditionally, states have preferred to implement new area codes through a geographic split, in which the geographic area using an existing area code is split into two parts, and roughly half of the telephone customers continue to be served through the existing area code and half must change to a new area code. States can, however, simply require a rearrangement of existing area code boundaries to accommodate local needs. The third method available to them is called an area code overlay, in which the new area code covers the same geographic area as an existing area code; customers in that area may thus be served through either code.

274. In the *Ameritech Order,* the Commission recognized the states' role in area code relief, attempted to clarify the balance of jurisdiction over numbering administration between the Commission and the states, and enumerated guidelines governing number administration. Additionally, the *Ameritech Order* declared that Ameritech's proposed wireless-only area code overlay would be unreasonably discriminatory and anti-competitive in violation of the Commission's guidelines and the Communications Act of 1934. The *NPRM* sought comment on whether the Commission should reassess the jurisdictional balance between the Commission and the states that was crafted in the *Ameritech Order* in light of Congress' grant to the Commission of exclusive jurisdiction over numbering administration, with permission to assign to the states any portion of that authority.[582] The *NPRM* also sought comment on what action the Commission should take when a state appears to be acting inconsistently with the Commission's numbering administration guidelines.[583]

[573] Area code exhaust occurs when nearly all of the NXXs in a given numbering plan area (NPA) have been consumed. Area code exhaust is a subset of number exhaust, which describes the situation in which numbers used for any purpose to support telecommunications services are consumed. NPAs are known commonly as area codes. The second three digits of a telephone number are known as the NXX code or Central Office code (CO code) . Typically there are 792 NXX codes available for assignment in an area code (every possible combination of three digits excluding numbers beginning with a 0 or 1 and numbers ending with 11).

[574] 47 U.S.C. 251(e)(1).

[575] *NPRM* at para. 256.

[576] ALTS comments at 8; *See also* Frontier comments at 5; GCI comments at 5; Indiana Commission Staff comments at 3; NYNEX comments at 18.

[577] PageNet comments at 6.

[578] Time Warner comments at 18.

[579] Bell Atlantic/NYNEX Mobile reply at 2.

[580] *See Ameritech Order,* 10 FCC Rcd 4596. 60 FR 19255 (January 23, 1995). *See, e.g.,* AT&T reply at 7; Bell Atlantic comments at 9; Pennsylvania Commission comments at 5; ACSI comments at 12.

[581] Texas Commission comments at 6.

[582] *See* 47 U.S.C. 251(e)(1).

[583] *NPRM* at para. 257.

b. Comments

275. Several commenters request that we clarify the *Ameritech Order* to prohibit service-specific overlays.[584] Others request clarification about all area code overlays, not just service-specific overlays. NCTA, for example, argues that all overlays deter the development of local competition. If competitors are relegated to new area codes, it says, potential customers will be forced to change their telephone numbers to obtain service from competitors.[585] NCTA adds that a customer is unlikely to trade a familiar code for a number that may appear to involve a toll charge, or to purchase additional lines from a competitor if those lines receive a different area code than other lines in their home or business.[586] Customers who do change to competing LECs, it claims, will have to dial ten or eleven digits to place local calls to incumbent LEC customers in the same local calling area. By contrast, NCTA maintains that incumbent LEC customers will be able to reach most other local customers through traditional seven-digit dialing.[587] Sprint agrees that all overlays are anti-competitive and argues that the industry should adopt a geographic split approach.[588]

276. MCI urges the Commission to allow an overlay only when it is the only practical alternative, and suggests that such circumstances might include: (a) Exhaust in a small metropolitan area; (b) multiple nearly-simultaneous area code exhausts; or (c) when exhaust is so imminent that a split cannot be implemented quickly enough.[589] Numerous commenters suggest that the Commission should clarify the *Ameritech Order* by imposing conditions on the adoption of area code overlays.[590] Suggested conditions include: (a) Mandatory ten-digit dialing for all calls within the overlay area;[591] (b) permanent service provider local number portability;[592] and (c) the reservation for each competing LEC authorized to operate within a numbering plan area (NPA) of at least one NXX code from the original area code.[593]

277. Cox asserts that area code overlays should be prohibited until the competitive concerns they raise are addressed by the implementation of number portability.[594] Similarly, PageNet asserts that number portability may render the concept of an area code meaningless; once location portability is feasible, numbers will be ported from one area code to another.[595] When this happens, it says, public preference for a particular area code will disappear.[596]

278. In the view of some, the *Ameritech Order* does not prohibit all area code overlays and they request clarification that overlays are an appropriate response to area code exhaust.[597] In Bell Atlantic/NYNEX Mobile's view, for example, the Commission should not prohibit overlays when they may be the best solution to area code exhaust.[598] PacTel agrees that overlays are valuable and, in some metropolitan areas, are preferable to geographic splits because: (1) Overlays do not require existing customers to change their numbers; (2) overlays maintain existing communities of interest in their existing geographical area code boundaries; (3) overlays do not change the boundaries of existing area codes; and (4) overlays take less time to implement than a split.[599] These are significant considerations for states facing number exhaust at an accelerated pace, it says.[600]

279. According to some commenters, issues pertaining to area code relief plans should be addressed in the first instance by state commissions, with the understanding that the Commission can intervene if necessary.[601] Similarly, the Texas Commission argues that the *Ameritech Order* can and should be interpreted to allow for ''innovative'' means of area code relief crafted to balance the interests, benefits, and burdens for all interested parties. Should the Commission determine that the *Ameritech Order* does not permit such an interpretation, the Texas Commission requests that the *Ameritech Order* be overruled.[602] By contrast, Vanguard warns against allowing states too much latitude in interpreting the *Ameritech Order*. It argues that, if the Commission does not set boundaries for state action, the Commission's procompetitive objectives will remain unrealized as state regulators deprive Commission initiatives of their effect.[603]

280. Bell Atlantic/NYNEX Mobile states that, if states act inconsistently with Commission guidance on numbering policies, the Commission should intervene promptly.[604] The District of Columbia Commission urges that ''on a showing that a particular state is acting in violation of FCC guidelines, the FCC may revoke its delegation of jurisdiction to that state.''[605] PageNet says the Commission should impose a strict time limit on state commission review of relief plans.[606] Sprint advises that any party ''retains the right to appeal any detrimental state commission mandate to the FCC, and * * * the FCC will act promptly on such appeals.''[607]

c. Discussion

281. In this *Order*, we are authorizing the states to continue the task of overseeing the introduction of new area codes subject to the Commission's numbering administration guidelines.[608] We are reiterating the guidelines enumerated in the *Ameritech Order* and clarifying the *Ameritech Order* to prohibit all service-specific or technology-specific overlays, and to impose conditions on the adoption of an all-services overlay. Existing Commission guidelines, which were originally enumerated in the *Ameritech Order*, state that numbering administration should: (1) Seek to facilitate entry into the communications marketplace by making numbering resources available on an efficient and timely basis; (2) not unduly favor or disadvantage any particular industry segment or group of consumers; and (3)

[584] *See, e.g.*, Cox comments at 6 n.11; PageNet comments at 23; SBC comments at 11; WinStar reply at 16; Vanguard reply at 5.

[585] NCTA comments at 9.

[586] *Id.*

[587] *Id. See also* MFS comments at 8–9.

[588] Sprint reply at 13. *See also* Cox reply at 3–5; MCI comments at 11; WinStar reply at 17.

[589] MCI comments at 12.

[590] *See, e.g.*, Cox comments at 5, 6 n.12; MFS comments at 8–9; California Commission comments at 8; MCI comments at 12–14; NCTA comments at 10; WinStar reply at 17.

[591] *See, e.g.*, MFS comments at 8–9; California Commission comments at 8; MCI comments at 12–13; WinStar reply at 17; PageNet comments at 8.

[592] *See, e.g.*, MFS comments at 8–9; Cox comments at 5; California Commission comments at 8; MCI comments at 12–14 (overlays should be conditioned upon the substantial mitigation of the cost of interim local number portability to competing LECs pending the implementation of permanent local number portability); NCTA comments at 10; WinStar reply at 17.

[593] *See, e.g.*, MFS comments at 8–9; MCI comments at 12–13 (*all* remaining NXXs in the old NPA should be assigned to competitors).

[594] Cox comments at 3–4.

[595] The term ''port'' means the transfer of a telephone number from one carrier's switch to another carrier's switch, which enables a customer to retain his or her number when transferring from one carrier to another. *See Number Portability Order* at n.32.

[596] PageNet reply at 4.

[597] See, *e.g.*, Bell Atlantic/NYNEX Mobile reply at 4–6; BellSouth comments at 20.

[598] Bell Atlantic/NYNEX Mobile reply at 4–6.

[599] PacTel reply at 31–32.

[600] Id.

[601] *See, e.g.*, NYNEX reply at 12; GTE reply at 34.

[602] Texas Commission comments at 5. See our discussion below at paras. 294–295 for the Texas Commission's proposed means of area code relief.

[603] Vanguard comments at 3–4.

[604] Bell Atlantic/NYNEX Mobile reply at 2.

[605] District of Columbia Commission comments at 2.

[606] PageNet comments at 7–8.

[607] Sprint comments at 15.

[608] *See* para. 272, *supra*.

not unduly favor one technology over another.[609] The Commission's conclusion in the *Ameritech Order* that Ameritech's proposed wireless-only overlay plan would be unreasonably discriminatory and anticompetitive in violation of sections 201(b) and 202(a) of the Communications Act of 1934 has also provided guidance to local central office code administrators and state commissions implementing area code relief.[610] We find that the guidelines and the reasoning enumerated in that decision should continue to guide the states and other entities participating in the administration of numbers because these guidelines are consistent with Congress' intent to encourage vigorous competition in the telecommunications marketplace. In addition, we codify in this *Order* the directives of the *NANP Order* that ensure fair and impartial numbering administration.[611]

282. We disagree with the suggestion of some parties that we prohibit or severely restrict the states' right to choose overlay plans. For example, PageNet urges the Commission to impose specific time constraints on states and to require default area code plans if states do not take action within those time constraints. Such restrictions would not be consistent with our dual objectives of encouraging competition through fair numbering administration while at the same time delegating to the states the right to implement area codes.

283. As we note above, states are uniquely situated to determine what type of area code relief is best suited to local circumstances. Certain localities may have circumstances that would support the use of area code overlays. Most significantly, area code overlays do not require any existing customers to change their telephone number, in contrast to geographic splits. Additionally, in some metropolitan areas continuously splitting area codes will result in area codes not covering even single neighborhoods, a situation that can only be avoided by implementing overlays. Finally, area code overlays can be implemented quickly. States may make decisions regarding the relative merits of area code splits and overlays so long as they act consistently with the Commission's guidelines. We emphasize that the burdens created by area code overlays will be greatest during the transition to a competitive marketplace. As competition in telecommunications services takes root, consumers will become more accustomed to ten-digit dialing and to area code overlays and the states will face less resistance in their efforts to implement new area codes than they will in the near term.

284. Nevertheless, we find that it is necessary to clarify the Commission's numbering administration guidelines as they apply to area code relief. Recent action taken by the Texas Commission has demonstrated that state commissions might interpret our existing guidelines in a manner that is inconsistent with those guidelines.[612] Thus, while we conclude that geographic area code splits and boundary realignments are presumptively consistent with the Commission's numbering administration guidelines, we clarify our guidelines with respect to how area code overlays can be lawfully implemented.

285. First, we conclude that any overlay that would segregate only particular types of telecommunications services or particular types of telecommunications technologies in discrete area codes would be unreasonably discriminatory and would unduly inhibit competition. We therefore clarify the *Ameritech Order* by explicitly prohibiting all service-specific or technology-specific area code overlays because every service-specific or technology-specific overlay plan would exclude certain carriers or services from the existing area code and segregate them in a new area code. Among other things, the implementation of a service or technology-specific overlay requires that only existing customers of, or customers changing to, that service or technology change their numbers. Exclusion and segregation were specific elements of Ameritech's proposed plan, each of which the Commission held violated the Communications Act of 1934.

286. To ensure that competitors, including small entities, do not suffer competitive disadvantages, we also conclude that, if a state commission chooses to implement an all-services area code overlay, it may do so subject to two conditions. Specifically, we will permit all-services overlay plans only when they include: (1) Mandatory 10-digit local dialing by all customers between and within area codes in the area covered by the new code; and (2) availability to every existing telecommunications carrier, including CMRS providers, authorized to provide telephone exchange service, exchange access, or paging service in the affected area code 90 days before the introduction of a new overlay area code, of at least one NXX in the existing area code, to be assigned during the 90-day period preceding the introduction of the overlay.[613] Clarifying the conditions that must exist in order to implement an area code overlay will reduce the likelihood that states will act inconsistently with the Commission's guidelines and the consequent need for the Commission to review area code relief plans.

287. We are requiring mandatory 10-digit dialing for all local calls in areas served by overlays to ensure that competition will not be deterred in overlay area codes as a result of dialing disparity. Local dialing disparity would occur absent mandatory 10-digit dialing, because all existing telephone users would remain in the old area code and dial 7 digits to call others with numbers in that area code, while new users with the overlay code would have to dial 10 digits to reach any customers in the old code. When a new overlay code is first assigned, there could be nearly 8 million numbers assigned in the old code, with just a few thousand customers using the new overlay code. If most telephone calls would be to customers in the original area code, but only those in the new code must dial ten-digits, there would exist a dialing disparity, which would increase customer confusion. Customers would find it less attractive to switch carriers because competing exchange service providers, most of which will be new entrants to the market, would have to assign their customers numbers in the new overlay area code, which would require those customers to dial 10 digits much more often than the incumbent's customers, and would require people calling the competing exchange service provider's customer to dial 10 digits when they would only have to dial 7 digits for most of their other calls. Requiring 10 digit dialing for all local calls avoids the potentially anti-competitive effect of all-services area code overlays.

288. Allowing every telecommunications carrier authorized

[609] *Ameritech Order,* 10 FCC Rcd at 4604.

[610] *Id.* at 4608, 4610–12.

[611] *See generally NANP Order.* Although we resolve specific issues relating to area code implementation in this *Order,* many other important numbering administration issues will be addressed in other proceedings. For example, the use of N11 codes, (*e.g.,* 211, 311, 411, 511, 611, 711, 811, 911) will be addressed in *The Use of N11 Codes and Other Abbreviated Dialing Arrangements,* CC Docket No. 92–105.

[612] As discussed at paras. 304–308 *infra,* we find that the Texas Commission's Order addressing area code relief in Dallas and Houston is inconsistent with the *Ameritech Order.*

[613] One NXX will give each carrier the ability to give at least some of its customers numbers in a familiar area code. Guaranteeing more than one NXX in this situation is difficult because by the time the need for the overlay becomes imminent, few NXX codes remain unassigned in the familiar area code.

to provide telephone exchange service, exchange access, or paging service in an area code to have at least one NXX in the existing NPA will also reduce the potential anti-competitive effect of an area code overlay. This requirement would reduce the problems competitors face in giving their customers numbers drawn from only the new ''undesirable'' area codes while the incumbent carriers continue to assign numbers in the ''desirable'' old area code to their own customers.[614]

289. Incumbent LECs have an advantage over new entrants when a new code is about to be introduced, because they can warehouse NXXs in the old NPA.[615] Incumbents also have an advantage when telephone numbers within NXXs in the existing area code are returned to them as their customers move or change carriers. Thus, to advance competition, we require that, when an area code overlay is implemented, each provider of telephone exchange service, exchange access, and paging service must be assigned at least one NXX in the old NPA.

290. A number of commenters suggested that the Commission permit area code overlays only if permanent number portability has been implemented in the applicable NPA.[616] We decline to do so. We recognize that the implementation of permanent service provider number portability will reduce the anticompetitive impact of overlays by allowing end users to keep their telephone numbers when they change carriers. Requiring the existence of permanent service provider number portability in an area before an overlay area code may be implemented, however, would effectively deny state commissions the option of implementing any all-services overlays while many area codes are facing exhaust. While permanent number portability is being implemented, end users will be allowed to keep their telephone numbers when they change carriers, under the Commission's mandate of interim number portability.[617]

291. If a state acts inconsistently with federal numbering guidelines designed to ensure the fair and timely availability of numbering resources to all telecommunications carriers, parties wishing to dispute a proposed area code plan may file a petition for declaratory ruling, rulemaking, or other appropriate action with the Commission. Pursuant to section 5(c)(1) of the Communications Act of 1934, as amended,[618] authority is delegated to the Common Carrier Bureau to act on such petitions. We expect that with the clarifications we provide in this *Order*, there will be a reduced need for such petitions. Unless it becomes necessary to do so, we decline to follow the recommendations of parties urging that we enumerate more specific procedures to be invoked if states fail to follow our numbering guidelines. We expect that the need for our review of any state commissions' actions with respect to area code relief should diminish as states gain more experience with the area code relief process generally and with area code overlays in particular, particularly as states become more familiar with the Commission's guidelines in this area.

292. Finally, we address petitions for clarification or reconsideration that were filed in the *Ameritech* and *NANP* proceedings. On February 22, 1995, Comcast Corporation filed a Petition for Clarification or Reconsideration of the *Ameritech Order* regarding the Commission's jurisdiction over numbering administration.[619] In its petition, Comcast seeks clarification of the *Ameritech Order* to the extent that it implies the Commission does not have broad statutory authority over the assignment of numbering resources, and seeks reconsideration of any implication in the *Ameritech Order* that the Commission's authority is limited by or subordinate to state interests.[620] Because section 251(e)(1) gives the Commission exclusive jurisdiction over numbering matters in the United States, any uncertainty about the Commission's and the states' jurisdiction over numbering administration that may have existed prior to the 1996 Act has now been eliminated. In light of the enactment of section 251(e)(1), Comcast's request that the Commission reconsider its conclusion in the *Ameritech Order* that the Commission does not retain plenary jurisdiction over numbering issues in the United States is moot. Accordingly, we dismiss Comcast's petition.

293. In the *NANP Order* the Commission discussed the states' authority over area code changes and central office code administration. In response the National Association of Regulatory Utility Commissioners filed a Request for Clarification and the Pennsylvania Public Utility Commission filed a Petition for Limited Clarification and/or Reconsideration.[621] NARUC and the Pennsylvania Commission have asked the Commission to clarify that, while the Commission intended in the *NANP Order* to transfer the incumbent LEC functions associated with CO code assignment and area code exhaust to the new NANP Administrator, the Commission did not intend to alter the role of the States in overseeing those functions.[622] Because section 251(e)(1) gives the Commission exclusive jurisdiction over numbering matters in the United States, and because we clarify the role of the states in numbering administration in this *Order*,[623] we dismiss the petitions of NARUC and the Pennsylvania Commission as moot.

[614] The new overlay area code may be considered less desirable by customers during the beginning of its life because it is less recognizable. For example, business users that have a telephone number in the overlay area code because they have switched carriers or obtained new telephone lines might be thought to be in a distant location due to the ''unrecognized'' area code. Thus, incumbent carriers would have a competitive advantage because most of their customers would remain in the old, more recognizable code. This effect would persist until customers become accustomed to the new overlay code.

[615] *See supra* n.573.

[616] Teleport Communications Group, Inc. (TCG) has raised this issue in a petition for declaratory ruling filed with the Commission on July 12, 1996. TCG's petition for declaratory ruling asks the Commission to: (1) Require that overlay area code plans may not be implemented unless permanent number portability and mandatory 10-digit dialing exist, and that geographic area code splits must be used absent these conditions; (2) require the implementation of TCG's ''Number Crunch'' proposal, which would permit NXX assignments across multiple rate centers in blocks of one thousand numbers; and (3) require as part of a BOC's application to provide in-region interLATA services pursuant to section 271 of the 1996 Act a demonstration that numbering resources are available to competing local carriers. We will address TCG's petition in a separate proceeding. *See Petition for Declaratory Ruling to Impose Competitively Neutral Guidelines for Numbering*

[617] *See Number Portability Order.*

[618] 47 U.S.C. 155(c)(1).

[619] *See Petition for Clarification or Reconsideration,* filed by Comcast Corporation (February 22, 1995). PageNet and Nextel Communications, Inc. (''Nextel'') filed Comments in support of Comcast's petition.

[620] Comcast Petition at 1. According to Comcast, footnote 18 of the *Ameritech Order* explicitly overruled *dicta* in a prior Commission decision that stated that the Commission had plenary jurisdiction over CO code allocation. *Id.* at 3.

[621] *See Request for Clarification,* filed by the National Association of Regulatory Utility Commissioners (NARUC Petition) (August 28,1995); *Petition for Limited Clarification and/or Reconsideration,* filed by the Pennsylvania Commission (Pennsylvania Commission Petition) (August 28, 1995). Nextel filed Comments in response to the petitions.

[622] *See* NARUC Petition at 5; Pennsylvania Commission Petition at 3. The Pennsylvania Commission also seeks clarification or reconsideration of the Commission's *NANP Order* to the extent that it suggests the Commission would interfere with or preempt a state's ability to address local number portability. *Id.* at 3–4. We do not address the states' role with respect to number portability here because this issue has already been addressed by the Commission. *See Number Portability Order* at para. 5.

[623] *See supra* paras. 281–291, and *infra* paras. 309–322.

3. Texas Public Utility Commission's Area Code Relief Order for Dallas and Houston

a. Background

294. On May 9, 1996, the Texas Commission filed two substantively identical pleadings: (1) a petition for expedited declaratory ruling pursuant to 47 CFR 1.2; and (2) an application for expedited review pursuant to 47 CFR 1.115.[624] The Texas Commission states that in July 1995, MCI petitioned it for an investigation into numbering practices of Southwestern Bell Telephone Company (SWB)[625] related to exhaustion of telephone numbers in the 214 area code serving the Dallas metropolitan area.[626] SWB proposed to relieve numbering exhaustion by implementing all-services overlays, which would require ten-digit local dialing within Houston and Dallas metropolitan areas.[627] In October 1995, an administrative law judge heard evidence regarding numbering relief plans and issued a written proposal for decision in November 1995. In December 1995, the Texas Commission determined that public comment on the matter was necessary; in January 1996 it conducted public forums in both Dallas and Houston.[628] In March 1996, the Texas Commission issued an Order setting out an area code relief plan.[629] On May 17, 1996, we released a public notice establishing a pleading cycle for comments on the Texas Commission's pleadings.[630]

b. Petition and Comments

295. The Texas Commission ordered a plan that combines an immediate landline geographic split with a prospective wireless overlay in the Dallas and Houston metropolitan areas.[631] In its pleadings to the FCC, the Texas Commission alleges that it specifically considered the *Ameritech Order* in crafting its plan.[632] The Texas Commission's Order required SWB to request new area codes from the NANP administrator (Bellcore) for the prospective wireless overlays. Bellcore refused to supply the new area codes unless ordered to do so by the FCC.[633] According to the Texas Commission, Bellcore incorrectly relied on the *Ameritech Order* to support a position that wireless overlays are, *per se*, invalid and wasteful.[634]

296. On March 21, 1996, Bellcore sent a letter to the Network Services Division of the Common Carrier Bureau, FCC, explaining its view that the Texas Commission plan violated the *Ameritech Order*.[635] In that letter, Bellcore asserts that the *Ameritech Order* is controlling precedent because section 251(e)(1) confers exclusive jurisdiction over numbering administration on the Commission. Bellcore further opposes use of NPAs for service-specific overlays, because such assignments, it says, are inefficient, wasteful, and potentially discriminatory.[636] The Network Services Division responded to the letter on April 11, 1996, agreeing that the *Ameritech Order* forbids service-specific overlays such as those ordered by the Texas Commission and supporting Bellcore's decision, as acting NANP Administrator, not to make the requested NPA assignments for use in Dallas and Houston as a wireless-specific overlay.[637]

297. The Texas Commission acknowledges that the FCC has exclusive jurisdiction over numbering pursuant to section 251(e)(1) of the 1996 Act.[638] The Texas Commission states that the *NPRM* might provide additional clarification on these issues, but that, currently, it is uncertain whether the FCC intended to preempt the Texas Order, and asks that the Commission consider the specific facts of this matter.[639] It contends that it carefully deliberated the issues and made a balanced and equitable decision that is consistent with the *Ameritech Order*. Therefore, it insists, any preemption is unwarranted.[640]

298. According to the Texas Commission, the *Ameritech Order* does not, on its face, prohibit all service-specific overlays.[641] Instead, it says, the *Ameritech Order* requires a fact-specific examination of each situation to determine whether the proposed numbering plan violates the statutory prohibition of unreasonable and unjust discrimination.[642] Further, in the Texas Commission's view, its Order ''strikes the optimal balance'' and is ''evenhanded'' in its effect on carriers

[624] The Texas Commission explains that it is filing both pleadings simultaneously, hoping that the Commission will find one or the other an appropriate vehicle by which to determine expeditiously whether a Texas Commission order (*PUCT Order*) pertaining to a proposed area code relief plan is acceptable. For ease of reference, all citations will be to the Texas Commission petition (PUCT petition) unless citations to both pleadings are needed for clarification. In this order, we are ruling on the PUCT petition. Therefore, action on the Texas Commission's application, a procedurally distinct but substantively identical pleading, is unnecessary.

[625] We note that, although SWB was the LEC proposing the originally disputed area code relief plan, SBC filed comments on the Texas Commission's proposed plan. SWB is a subsidiary of SBC.

[626] PUCT petition at 2. The Texas Office of Public Utility Council filed a similar petition in August 1995 regarding SWB's numbering practices related to the exhaustion of telephone numbers in the 713 area code in Houston. The Texas Commission consolidated the petitions into Texas Public Utilities Commission Docket No. 14447 because similar issues were presented.

[627] *Id.*

[628] *Id.*

[629] *Id.*

[630] *See Pleading Cycle Established for Comments on Public Utility Commission of Texas' Petition for Expedited Declaratory Ruling and Application for Expedited Review of Area Code Plan for Dallas and Houston*, Public Notice, DA 96–794 (released May 17, 1996). Comments were due June 6, 1996, and reply comments were due June 21, 1996. Nineteen parties filed comments, and twelve parties filed replies, in response to the Texas Commission's petitions.

[631] PUCT petition at 2–3.

[632] *Id.* at 3. In the *Ameritech Order*, the Commission held that three elements of a proposed wireless-only overlay each violated the prohibition in section 202(a) of the Communications Act of 1934 against unjust or unreasonable discrimination, and also represented unjust and unreasonable practices under section 201(b). Those objectionable elements were: (1) Ameritech's proposal to continue assigning NPA 708 codes (the old codes) to wireline carriers, while excluding paging and cellular carriers from such assignments (the ''exclusion'' proposal); (2) Ameritech's proposal to require only paging and cellular carriers to take back from their subscribers and return to Ameritech all 708 telephone numbers previously assigned to them, while wireline carriers would not be required to do so (the ''take back'' proposal); and (3) Ameritech's proposal to assign all numbers from the new NPA (630) to paging and cellular carriers exclusively (the ''segregation'' proposal). *See Ameritech Order*, 10 FCC Rcd at 4608, 4611.

[633] PUCT petition at 3.

[634] *Id.*

[635] PUCT petition, Attachment B.

[636] *Id.*

[637] PUCT petition at 3–4.

[638] *Id.* at 5.

[639] The Texas Commission argues that the April 11, 1996, letter did not rule directly on the validity of its Order. Moreover, noting that, in the *NPRM*, the Commission references the April 11 Common Carrier Bureau letter, Texas says that the *NPRM* states that the Commission (rather than the Network Services Division) agreed with Bellcore's decision not to make the area code assignments requested by SWB. *NPRM* at para. 257, n.358. Therefore, in Texas' view, the Common Carrier Bureau letter is an action taken pursuant to delegated authority that affirmatively adopts Bellcore's decision and preempts its order. The Texas Commission argues that this action should be reviewed by the Commission. PUCT petition at 4.

[640] PUCT petition at 5. In its petition for declaratory ruling, the Texas Commission requests that we declare: (1) That the refusal of the Chief, Network Services Division, Common Carrier Bureau, to direct the NANP administrator to assign area codes to SWB for use as wireless overlays in Dallas and Houston was erroneous; (2) that the NANP administrator is directed to assign such codes to SWB; and (3) that the Texas Commission's March 13, 1996 Order directing a combination wireline area code split and wireless overlay in Dallas and Houston is lawful. *Id.* at 10. In its application for expedited review, it requests that we: (1) Review and reverse the Network Services Division's action in its letter to the NANP administrator; (2) order the NANP administrator to assign the requested area codes for use as wireless overlays in Dallas and Houston; and (3) uphold the Texas Commission's Order pursuant to analysis of Commission precedent. PUCT application at 10.

[641] PUCT petition at 5–6.

[642] *Id.* at 6.

and customers.[643] The Texas Commission alleges that it weighed different proposals offered by several parties, and that, although a geographic split was found superior to an all-services overlay, neither plan alone was found to be the best solution.[644] For this reason, it chose a two-step, integrated relief plan involving a landline geographic split and a prospective wireless overlay.[645] The Texas Commission argues that its plan permits intra-NPA seven-digit dialing, unlike an all-services overlay, which would have required ten-digit intra-NPA dialing. Also, it says that its plan will reduce customer confusion and provide greater competitive fairness to service providers.[646]

299. Many parties contend that the Texas Commission's plan violates Commission policy as outlined in the *Ameritech Order* and request its clarification.[647] Still others argue that the plan violates section 201(b) or section 202(a),[648] as well as section 251(e)(1), which confers exclusive jurisdiction over numbering administration on the Commission that we have not assigned to any other entity.[649] Still others argue that the plan violates section 253, which provides that no state requirement may prohibit or have the effect of prohibiting the ability of any entity to provide any telecommunications service.[650]

300. In Sprint Spectrum's view, for example, the proposed wireless overlays will undermine the ability of telecommunications carriers to provide service because they allow existing customers of wireless incumbents to retain 7-digit dialing for most calls if they do not switch to a new entrant. Similarly, it says, current customers of wireline incumbents will retain 7-digit dialing to businesses and residences in either the suburban or metropolitan area, unless they switch to a new wireless provider.[651] Sprint Spectrum maintains that, by creating a distinction between services offered by incumbent providers and those seeking entry into the market using wireless technology, the Texas Commission has created a disincentive for new wireless providers to seek entry into these telecommunications markets.[652] Similarly, PageNet argues that this interference with customer choice, and the inhibition of wireline/wireless competition, are contrary to the objectives stated in the *Ameritech Order,* and urges the Commission to expressly declare the Texas Commission's plan prohibited.[653]

301. Twelve reply comments were received. The Texas Commission contends that it had jurisdiction to issue its order containing its proposed area code relief plan, and the 1996 Act does not deprive the Texas Commission of that jurisdiction.[654] The Texas Commission argues that the exclusion, segregation, and take-back facets of the wireless-only overlay proposal should not be considered separate and independent grounds for finding an NPA relief plan unlawful.[655] The Texas Commission maintains that we should not order an alternative form of relief such as an all-services overlay,[656] and that we should not find unlawful the Texas Commission's proposed consideration of take-back of wireless numbers during the geographic split if the wireless overlays are deemed unlawful.[657]

302. The Texas Public Utility Counsel filed reply comments in support of the Texas Commission's proposed area code relief plan. The Texas Public Utility Counsel maintains that the proposed wireless-only overlay is neither discriminatory nor unreasonable under sections 202(a) and 201(b) of the Communications Act of 1934.[658] Further, the Texas Public Utility Counsel claims that the wireless carriers' interpretation of the *Ameritech Order* is unreasonably strict and would preclude all forms of area code relief.[659]

303. In reply, several parties continue to maintain that the Texas Commission's proposed prospective wireless-only overlay is unlawful.[660] Most of these commenters contend that an all-services overlay can be an appropriate method of area code relief.[661]

c. Discussion

304. We conclude that the Texas Commission's wireless-only overlay violates our *Ameritech Order* on its face. It is also inconsistent with our clarification of the *Ameritech Order* contained in this *Order,* wherein we specifically prohibit wireless-only overlays.

305. The Texas Commission itself admits to the presence of exclusion and segregation in its plan.[662] In the *Ameritech Order,* we clearly indicated that the presence of any one of the following elements including: (1) Exclusion; (2) segregation; or (3) take-back, renders a service-specific overlay plan unacceptable and violative of the Communications Act.[663] Texas' plan features all these elements. Like the plan proposed in the *Ameritech Order,* the Texas Commission's plan would unreasonably discriminate against wireless carriers. It is thus unreasonably

[643] *Id.* at 6–9. In the *Ameritech Order,* we stated that any area code relief plan that becomes effective should strike an optimal balance among three objectives Ameritech had identified: (1) An optimal dialing plan for customers; (2) as minimal a burden as feasible; and (3) an uninterrupted supply of codes and numbers. We further found that the optimal balance must assure that any burden associated with the introduction of the new numbering code falls in as evenhanded a way as possible upon all carriers and customers affected by its introduction. *Ameritech Order,* 10 FCC Rcd at 4611.

[644] PUCT petition at 7.

[645] *Id.*

[646] *Id.*

[647] *See, e.g.,* AT&T comments at 5; Century Cellunet comments at 3–4; Cox comments at 3–4; GTE comments at 8–14; HCTC comments at 3–10; MCI comments at 3–4; Nextel comments at 3–6; PageNet comments at 6–10; PCIA comments at 4–6; ProNet comments at 7–14; Sprint comments at 4–5; Sprint Spectrum comments at 5–11; Teleport comments at 4–12; US West comments at 9–10; Vanguard comments at 2–3; SBC comments at 5–12.

[648] *See, e.g.,* AT&T comments at 5; HCTC comments at 3–10; PageNet comments at 9; ProNet comments at 1; Sprint comments at 4–5; Sprint Spectrum comments at 6–11.

[649] *See, e.g.,* Century Cellunet comments at 4; GTE comments at 7; PCIA comments at 6–7; U S WEST comments at 4–5. *See also* Teleport comments at 13.

[650] Sprint Spectrum comments at 4.

[651] Sprint Spectrum comments at 4–5 and 11–12.

[652] *Id.* at 12.

[653] PageNet comments at 6–10. *See also* SBC comments at 12–16.

[654] Texas Commission reply at 2–7.

[655] *Id.* at 7–8.

[656] *Id.* at 9–10.

[657] *Id.* at 10–11.

[658] Texas Public Utility Counsel reply at 9–11.

[659] *Id.* at 12–15.

[660] *See, e.g.,* CTIA reply at 2–3; Vanguard reply at 1–4; MCI reply at 3–5; ProNet reply at 1; Sprint reply at 1–2. SBC states that the Texas Commission overlays are unlawful, and argues that we should expressly state that service-specific overlays are *per se* unlawful. SBC reply at 1.

[661] ProNet reply at 2–4; BellSouth reply at 2–6; US WEST reply at 1–6; SBC reply at 2–4.

[662] The record also indicates that the plan also calls for some take-back of existing wireless numbers. The Texas Commission states that two groups of wireless customers will experience take-back due to the geographic split. Those with Type 1 cellular and Type 1-like paging connections will experience take-back for ''technical and practical implementation-related reasons. *PUCT Order* at 12 n.9. In addition, the Texas Commission envisions that after the date on which NXX codes are activated for the prospective wireless overlay, wireless carriers holding NXX codes from the prior area codes will not be allowed to assign any additional numbers from those prior area codes, regardless of the fill factor of the NXX codes. Remaining unused numbers in those NXX codes will be returned to the NPA administrator. *PUCT Order* at 6.

[663] *See Ameritech Order,* 10 FCC Rcd at 4608. ''[W]e find as a matter of law that *each* of these three Ameritech proposals violates the prohibition in the Act against unjust or unreasonable discrimination.'' (Emphasis added). *See also id.* at 4611. In discussing whether Ameritech's plan constituted an unjust or unreasonable practice and therefore violated section 201(b) of the Act, we stated that three facets of Ameritech's plan—its exclusion, segregation, and take-back proposals—would *each* impose significant competitive disadvantages on the wireless carriers, while giving certain advantages to wireline carriers.

discriminatory under section 202(a) and would constitute an unreasonable practice in violation of section 201(b) of the Communications Act of 1934. Moreover, in this *Order,* we have clarified the *Ameritech Order* by prohibiting all service-specific and technology-specific area code overlays. Service-specific and technology-specific overlays do not further the federal policy objectives of the NANP. They hinder entry into the telecommunications marketplace by failing to make numbering resources available on an efficient, timely basis to telecommunications services providers. As we describe in detail above, service-specific overlays would provide particular industry segments and groups of consumers an unfair advantage. We have also stated that administration of the NANP should be technology neutral; service-specific overlays that deny particular carriers access to numbering resources because of the technology they use to provide their services are not technology neutral.

306. We find the Texas Commission's arguments in support of its proposed wireless-only overlay unpersuasive. It argues, for example, that the wireless overlay will extend the life span for the area code relief plan. What extends the life span of a relief plan, however, is not so much the wireless overlay as the introduction of a new NPA with its 792 additional NXXs. This being the case, the Texas Commission provides no compelling reason for isolating a particular technology in the new NPA. The Texas Commission also states that there will be less confusion regarding NPA assignments, but a plan calling for overlay for one service and a split for another is likely to lead to increased customer confusion regarding NPA assignments, because parties making calls would have to be aware of what type of service the party being called has in order to know whether to dial the ten-digit number or just the last seven digits. The Texas Commission also argues that its plan allows for continued seven-digit dialing for intra-NPA calls, but we note that the same would be true if a geographic split for all services and technologies was imposed. Although an all-services overlay would have required ten-digit intra-NPA dialing, there would not be discrimination based on technology.

307. Several parties raise concerns about dialing disparity resulting from the implementation of the Texas Commission's plan. It is these concerns about dialing disparity in the context of an overlay that have led us to require mandatory ten-digit dialing as part of any all services overlay plan.

308. Some parties also advance concerns about the Texas Commission's statements that, if the proposed wireless-only overlay were found to be unlawful, it would consider a mandatory pro-rata take-back of wireless numbers under the geographic split plan in order to balance the remaining burdens of inconvenience and confusion caused by the number changes necessitated by a split. We do not take action here to prevent the Texas Commission from taking back some wireless numbers in the course of introducing a geographic split plan. In a geographic split, roughly half of the customers in the existing NPA, including wireless customers, will have to change their telephone numbers. We recognize that wireless customers may need to have their equipment reprogrammed to change their telephone number, and that this will inconvenience wireless customers to some extent. This illustrates the fact that geographic splits also have burdensome aspects. Our goal is to have technology-blind area code relief that does not burden or favor a particular technology. Requiring approximately half of the wireless customers and wireline customers to change telephone numbers in a geographic split is an equitable distribution of burdens. This is the kind of implementation detail that is best left to the states.

4. Delegation of Additional Numbering Administration Functions

a. Background

309. In the *NANP Order,* we transferred CO code administration to the new NANP administrator. We stated that a ''requirement that CO code administration be centralized in the NANP administrator simply transfers the functions of developing and proposing NPA relief plans from the various LEC administrators to the new NANP Administrator'' and that ''[s]tate regulators will continue to hold hearings and adopt the final NPA relief plans as they see fit.'' [664]

310. In the *NPRM,* we tentatively concluded that, pursuant to section 251(e)(1), the Commission should authorize states to address matters related to implementation of new area codes, and we are doing so in this *Order.* In the *NPRM,* we also sought comment on whether the Commission should authorize states or other entities to address any additional number administration functions. We address this issue here.

[664] *NANP Order,* 11 FCC Rcd at 2622.

b. Comments

311. Some commenters raise issues about the proper role of the states in number administration both before and after transfer of number administration functions to the NANP. BellSouth, for example, argues that we should authorize states to address additional number administration functions until their transfer to the NANP. Specifically, BellSouth recommends that states should take active oversight in CO code implementation activities, including the power to allow for cost recovery.[665]

312. SBC expresses concern regarding the expeditious transfer and centralization of CO code administration into the new NANP. In SBC's view, such transfer is appropriate, but before it can take place, all relevant issues must first be fully addressed and resolved. SBC states that code administrators need local knowledge of authorized carriers, service areas, and toll and local calling areas for the transfer to be effective. SBC asserts that, because CO code administration has significant impacts on local areas in terms of relief plans and dialing plans, state regulatory commissions should be included in any decision.[666] In reply, MFS, stating that the Commission should not ''be swayed'' by SBC's singular concerns about the complexity of CO code assignments and the need for state involvement, argues against any potential delay in the transfer of numbering responsibilities.[667] Similarly, WinStar, stating that such delay would be contrary to the letter and spirit of the 1996 Act, argues against any delay in transferring numbering administration from the LECs to the NANP administrator.[668]

313. Some parties argue that, when the new NANP administrator is established, the Commission should allow state commissions to handle the current functions of the LEC, including development of area code relief plans and assignment of CO codes.[669] According to the Florida Commission, if the state commissions do not decide to handle these functions, the NANP administrator should be responsible for these processes.[670] Cox, however, does not support delegation of CO code assignment responsibility to the states and contends that if the Commission does authorize the states to perform this function, it should adopt specific

[665] BellSouth comments at 20.

[666] SBC comments at 11–13.

[667] MFS reply at 4.

[668] WinStar reply at 15–16.

[669] *See, e.g.,* Florida Commission comments at 6–7; Indiana Commission Staff comments at 6.

[670] Florida Commission comments at 6–7.

policies for CO code assignment requiring that such assignments be made on a non-discriminatory basis.[167] The Pennsylvania Commission states that, after the new NANP administrator assumes LEC administrative responsibilities, the Commission should allow states to continue their regulatory oversight role. Specifically, the Pennsylvania Commission asserts that the Commission should delegate to state commissions regulatory oversight of CO code assignment, including local number portability and local dialing parity measures.[672]

314. In the Indiana Commission Staff's view, we should authorize state commissions to make decisions regarding the implementation or changing of dialing patterns consistent with non-discriminatory and competitive guidelines, and changes in dialing patterns should be incorporated into the area code relief planning process. The Indiana Commission Staff asserts that states are in a better position to determine what impact changes in dialing will have on the local area.[673] Conversely, Vanguard argues the Commission should satisfy its Congressional mandate by establishing national numbering and dialing parity guidelines.[674]

c. Discussion

315. We conclude that the states may continue to implement or change local dialing patterns subject to any future decision by the Commission regarding whether to require uniform nationwide dialing patterns.[675] The Commission will retain broad policy-making jurisdiction over numbering. We further conclude that states that wish to be responsible for initiating area code relief planning, a function currently performed by the LECs as CO code administrators, may do so now and after transfer of CO code administration from the LECs to the new NANP administrator. Again, because of the need to avoid disruption in numbering administration, we find good cause to make this authorization effective immediately pursuant to 5 U.S.C. 553(d)(3). We decline, however, to delegate to the states on a permanent basis oversight of CO code administration. Finally, we decline to authorize states to handle CO code assignment functions.

316. Currently, state commissions are responsible for determining the number of digits that must be dialed for intra-NPA toll calls and inter-NPA local calls.[676] For example, while most states require 1 plus 10-digit dialing for all intra-NPA toll calls, California and New Jersey permit such toll calls to be completed with 7-digit dialing. Illinois requires 7-digit dialing for all intra-NPA calls, whether local or toll. Similarly, a number of states, including the District of Columbia, Maryland, and parts of Virginia require 10-digit dialing for all inter-NPA local calls and permit 10-digit or 1 plus 10-digit dialing for all intra-NPA local calls.

317. States are in the best position at this time to determine dialing patterns because of their familiarity with local circumstances and customs regarding telephone usage. For example, one state commission might want to allow its residents to dial 7-digits for all intra-NPA calls, whether toll or local, whereas another state commission might wish to require 10-digit dialing for intra-NPA calls to ensure that its residents recognize that they are making a toll call rather than a local call. Therefore, states may continue to implement appropriate local dialing patterns, subject to the Commission's numbering administration guidelines, including the Commission's requirement in this *Order* of 10-digit dialing for all calls within and between NPAs in any area where an area code overlay has been implemented.

318. Two state commissions specifically ask the Commission to authorize states to perform functions associated with initiating and planning area code relief, as distinct from adopting final area code relief plans.[677] We agree that states should be authorized to initiate and plan area code relief. Currently, when an incumbent LEC in its role as CO code administrator predicts that NPA exhaust is imminent, it initiates the NPA relief planning process by holding industry meetings, developing an appropriate area code relief plan or plans, and proposing that plan or several alternative plans for the state commission's consideration and adoption.[678] Thus, state commissions do not initiate and develop area code relief plans,[679] but states adopt, codify or reject the final plan.[680]

319. We conclude that states wishing to become responsible for initiating area code relief planning, a function currently performed by the LECs as CO code administrators, may do so, even after transfer of CO code administration from the LECs to the new NANP administrator. We find that enabling states to initiate and develop area code relief plans is generally consistent with our previous delegation of new area code implementation matters to the state commissions based on their unique familiarity with local circumstances. We

[671] Cox states that the policies should state that carriers and states currently administering CO codes are not permitted to deny codes to new entrants, and are not permitted to levy ''code opening'' charges to avoid imposing barriers on the entry and expansion of new competitors. Cox comments 8–9. In its reply, Cox notes that incumbent LECs have argued that there is no need for Commission intervention in the assignment of CO codes. Cox argues that, in practice, despite the existence of ''neutral'' CO code assignment guidelines, significant potential for discriminating against new entrants remains. Until an impartial entity is responsible for assigning CO codes, Cox contends, there is a need for specific Commission rules preventing discrimination. Cox would prefer that CO codes be administered by a neutral administrator, and believes that the possibility that a neutral administrator will lack some local knowledge does not form an insurmountable barrier to a swift transition from the current regime. Cox reply at 10–11.

[672] Pennsylvania Commission comments at 7.

[673] Indiana Commission Staff comments at 7.

[674] Vanguard reply at 2–3.

[675] Uniform nationwide dialing, which would require uniform dialing patterns throughout the United States, was raised in the *NANP NPRM*, Docket No. 92–237, 9 FCC Rcd 2068, 2075 (1994), 59 FR 24103 (April 4, 1994), but was not addressed in the *NANP Order* and remains unaddressed by the Commission.

[676] In every state, intra-NPA local calls can be dialed using 7-digits, while all inter-NPA calls require 1 plus 10-digit dialing. For a list of standard and permissible dialing patterns in each state, see *North American Numbering Plan, Numbering Plan Area Codes 1996 Update*, Bellcore (January 1996) at 11–16.

[677] Indiana Commission Staff comments at 6–7; Florida Commission comments at 5.

[678] *See, e.g., Illinois Bell Telephone Company Petition for Approval of NPA Relief Plan for 708 Area Code by Establishing a 630 Area Code*, Order, No. 94–0315 (Ill. Comm. Comm'n March 20, 1995).

[679] The process of area code relief initiation and development varies by state. In most cases the incumbent LEC (as CO code administrator) declares that the supply of CO codes in a particular area code is about to exhaust, and invites all telecommunications entities with interests in the area code at issue to meet and attempt to reach consensus on a plan for area code relief. Issues before the industry include whether to propose an area code overlay or a geographic split. If the industry can agree on the proposal, it is submitted to the state commission for adoption. If the industry cannot agree, the incumbent LEC may submit a number of alternatives to the state commission from which to choose.

[680] State commissions have, however, recently begun to reject or significantly alter LEC proposals as area code relief has become more controversial. *See, e.g., Illinois Bell Telephone Company Petition for Approval of NPA Relief Plan for 708 Area Code by Establishing a 630 Area Code*, Order, No. 94–0315 (Ill. Comm. Comm'n March 20, 1995); *AirTouch V. Pacific Bell*, Case 94–09–058, *MCI V. Pacific Bell*, Case 95–01–001, Decision No. 95–08–052 (Cal. Pub. Util. Comm'n August 11, 1995); *Petition of MCI Telecommunications Corp. for an Investigation of the Practices of Southwestern Bell Telephone Co. Regarding the Exhaustion of Telephone Numbers in the 214 Numbering Plan Area and Request for a Cease and Desist Order Against Southwestern Bell Telephone Co., Petition of the Office of the Public Utility Counsel for an Investigation of the Practices of Southwestern Bell Telephone Co. Regarding the Exhaustion of Telephone Numbers in the 713 Numbering Plan Area and Request for a Cease and Desist Order Against Southwestern Bell Telephone Co.*, Order on Rehearing, Docket No. 14447 (Tex. Pub. Util. Comm'n. April 29, 1996).

make this delegation, however, only to those states wishing to perform area code relief initiation and development. We recognize that many state commissions may not wish to perform these functions because, *inter alia,* the initiation and development of area code relief can require specialized expertise and staff resources that some state commissions may not have. Those states that seek to perform any or all of these functions must notify the new NANP administrator within 120 days of the selection of the NANP administrator. Those states wishing to perform functions relating to initiation and development of area code relief prior to the transfer of such functions to the new NANP administrator must notify promptly the entity currently performing CO code administration. States should inform the entities of the specific functions upon which the state wishes to take action. Area code relief initiation and development functions will be transferred to and performed by the new NANP administrator for those states that do not seek to perform such functions. We emphasize that, pursuant to our decision to authorize the states to address matters related to the implementation of area code relief, all state commissions will continue to be responsible for making the final decision on how new area codes will be implemented, subject to this Commission's guidelines.

320. While we authorize states to resolve specific matters related to initiation and development of area code relief plans, we do not delegate the task of overall number allocation, whether for NPA codes or CO codes. To do so would vest in fifty-one separate commissions oversight of functions that we have already decided to centralize in the new NANPA. A nationwide, uniform system of numbering, necessarily including allocation of NPA and CO code resources, is essential to efficient delivery of telecommunications services in the United States.[681]

321. With specific regard to CO code allocation, two BOCs and one state commission have asked us to delegate oversight of this function to the states on a permanent basis. We decline. In addition to the problems noted in the preceding paragraph, we are concerned that such an arrangement could complicate and increase the NANP administrator's workload, and could also lead to inconsistent application of CO code assignment guidelines. The oversight and dispute resolution process established in the *NANP Order,* whereby for the U.S. portions of NANP administration the NANC will have initial oversight and dispute resolution duties, with the Commission as the final arbiter, provides an adequate process for overseeing CO code administration.[682] This process also guarantees state participation in the oversight process through their representation on the NANC.

322. Finally, we decline to authorize states to perform CO code assignment functions as suggested by the Florida Commission for two reasons set forth in the *NANP Order.*[683] First, centralizing CO code assignment in one neutral entity will increase the efficiency of CO code assignment because it will preclude varying interpretations of CO code assignment guidelines. Consistent application of assignment guidelines will also diminish the administrative burden, which can be a potential barrier to entry, facing those carriers seeking codes in various states that would otherwise have to associate with a number of separate code assignment bodies rather than one. Second, a centralized CO code administration mechanism would allow the Commission and regulators from other NANP member countries to keep abreast of CO code assignments and predict potential problem areas, such as exhaust, sooner than is possible under the current system.

5. Delegation of Existing Numbering Administration Functions Prior to Transfer

a. Background

323. Prior to the enactment of the 1996 Act, Bellcore, as the NANP Administrator, the incumbent LECs, as central office code administrators, and the states performed the majority of functions related to the administration of numbers.[684] In the *NPRM,* the Commission tentatively concluded that it should authorize Bellcore, the incumbent LECs and the states to continue performing each of their functions related to the administration of numbers as they existed prior to enactment of the 1996 Act until such functions are transferred to the new NANP administrator pursuant to the NANP Order.[685] We address this issue here.

b. Comments

324. Several commenters agree with our tentative conclusion to authorize Bellcore, the LECs, and states to continue performing the numbering administration functions they currently perform until such functions are transferred to the new NANP administrator.[686] Generally, these commenters contend that this is the most efficient and least disruptive solution, and that it should be implemented in the interest of numbering administration continuity. Using this approach, NYNEX says, the Commission can intervene and exercise its authority as specific future matters may warrant.[687] AT&T states that current functions should continue until transferred, provided that those functions are not expanded and that the Commission ensures prompt compliance with the NANP Order.[688] MFS supports interim delegation of current functions, but asserts that states should have the authority to implement interim changes in number administration as long as their actions are consistent with our numbering policy objectives.[689]

325. The California Commission states that it is considering serving as CO code administrator until the NANC has developed its policy on numbering administration. It urges the Commission to allow states with unique number administration problems to resolve these issues in the interim.[690] PacTel states that it has proposed a partial transfer of CO code administration to the California Commission or a third party. In the alternative, it says, the California Commission could serve as an interim CO code administrator until the NANC completes its work, or until the California Commission selects a permanent administrator. In PacTel's view, these options are consistent with our proposal to permit the LECs, Bellcore, and the states to continue performing each of their respective

[681] *Ameritech Order,* 10 FCC Rcd at 4602.

[682] *See NANP Order,* 11 FCC Rcd at 2605–2610.

[683] *Id.* at 2620–2623.

[684] For a discussion of NANP administration functions, *see NANP Order,* 11 FCC Rcd at 2595.

[685] *NPRM* at para. 258.

[686] *See, e.g.,* MFS comments at 9; ACSI comments at 13; Ameritech comments at 24; AT&T comments at 12; Bell Atlantic comments at 9; BellSouth comments at 20; District of Columbia Commission comments at 3; Florida Commission comments at 6; GTE comments at 30; NYNEX comments at 18–19; Pennsylvania Commission comments 6–7; PacTel comments at 25; Texas Commission comments at 6; SBC comments at 9.

[687] NYNEX comments at 18–19. NYNEX asserts that we should reject arguments in favor of implementation of an interim arrangement so that incumbent LECs no longer have responsibility for NXX code administration. Incumbent LECs currently assign the NXXs according to industry standards, and under Commission oversight, NYNEX notes. Therefore, there is no need for a short-lived transfer of the responsibilities to another party.

[688] AT&T comments at 12.

[689] By way of example, MFS notes that California is considering sharing CO code assignment with LECs until that function is transferred to the NANP administrator. MFS comments at 9.

[690] California Commission comments at 7–8.

functions related to number administration until those functions are transferred to the new entity.[691] PacTel asserts that California's plan to share code assignment functions between PacTel and the California Commission until the transfer to the new NANP administrator should be identified as a ''safe harbor'' under the Act.[692]

326. Other commenters oppose the Commission's proposal to authorize Bellcore, the incumbent LECs, and the states to continue performing those numbering administration functions they performed prior to enactment of section 251(e)(1) on an interim basis until such functions are transferred to the new NANP administrator.[693] They express concern about the appearance of incumbent LEC dominance and discrimination in the assignment and administration of scarce numbering resources. The Indiana Commission Staff recommends that area code planning and implementation be removed from the responsibility of the LECs in favor of state commissions. In its view, delegating the planning and implementation process to state commissions will foster a ''more competitive spirit'' among the industry. The Indiana Commission Staff envisions that state commissions could obtain periodic reports from the present incumbent LEC administrator as well as Bellcore on projected exhaust dates for area codes.[694] Sprint states that, as long as Bellcore and the LECs serve as NANP and CO code administrators, they should be required to apply identical standards and procedures for processing all numbering requests, irrespective of the identity of the party submitting the request.[695]

327. Cox recommends that, in the event the Commission authorizes the state commissions to handle CO assignment, such assignment must be made on a nondiscriminatory basis, and states or the carriers currently administering the CO codes should not be permitted to deny codes to new entrants or to levy ''code opening'' charges. In Cox's view, the Commission should adopt specific CO code guidelines because: (a) There is evidence of continued discrimination in CO code assignment; and (b) without Commission guidance, states will develop inconsistent regimes. Cox notes that Commission action is especially important here because CO code assignments have not been transferred to a neutral party.[696] Similarly, several commenters argue in CC Docket No. 95–185 that many incumbent LECs are charging paging carriers and other CMRS providers discriminatory fees for activating CO codes, as well as unreasonable and discriminatory recurring monthly charges for blocks of numbers.[697]

c. Discussion

328. Until such functions are transferred to the new NANP administrator, we authorize Bellcore and the incumbent LECs to continue performing the number administration functions they performed prior to the enactment of the 1996 Act. Again, because of the need to avoid disruption in numbering administration, we find that there is good cause to make these authorizations effective immediately pursuant to 5 U.S.C. 553(d)(3). We also conclude that any incumbent LEC charging competing carriers fees for assignment of CO codes may do so only if it charges the same fee to all carriers, including itself and its affiliates.

329. Numbering administration is a complex task that Bellcore, the incumbent LECs, and, to some extent, the states have been performing for over a decade. It is crucial that efficient and effective administration of numbers continues as the local market opens to competition. This delegation is the most practicable way that numbering administration can continue without disruption. During the transition period, those parties with experience should continue to perform the administrative functions that they have become uniquely equipped to handle. Thus, we authorize Bellcore to continue to perform its functions as the North American Numbering Plan Administrator in the same manner it did at the time of enactment of the 1996 Act. We also allow the incumbent LECs to continue to perform the CO code administration functions that they performed at the time of enactment of the 1996 Act. Finally, we allow the states, if they performed any number administration functions prior to enactment of the 1996 Act, to continue to do so until such functions are transferred to the new NANP administrator.

330. Some commenters argue that we should not authorize Bellcore and the incumbent LECs to perform numbering administration functions on a transitional basis because continued administration of numbers by these entities, which are not neutral administrators, will permit discriminatory treatment of the incumbents' competitors with respect to access to number resources. While we recognize these concerns, we see no alternative to the action we take here. Transfer of numbering administration functions will be a complex task, one that cannot be accomplished immediately even on transitional basis. The Commission, for example, does not have the resources to administer numbers on a day-to-day basis.

331. In this regard, we note that a proposal has been made to the California Commission to transfer CO code administration to the California Commission or a third party or, in the alternative, to have the California Commission serve as the interim CO code administrator until the NANC completes its work or until the California Commission selects a permanent administrator.[698] We conclude that the record does not support allowing states to change the way CO code administration is performed during the transition to the new NANP administrator. Uniform CO code administration is critical to efficient operation of the public switched network for proper delivery of telecommunications services. The transfer of CO code administration to the states pending the transition to the new NANP administrator would not foster that consistency because states wishing to assume such responsibilities would lack the necessary experience to perform them with speed and accuracy. The California Commission does not refute this persuasively. We therefore urge parties wishing to alter the administration of certain numbers or to change the assignment of responsibilities for administering numbers pending transfer of these functions to the new NANP administrator to raise these issues with the Commission on a case-by-case basis in separate proceedings. In their filings, these parties should state who would bear the cost of a temporary delegation and how such a delegation could be implemented without confusion to carriers and customers.

332. Some commenters have expressed concern that numbering

[691] PacTel comments at 25.

[692] PacTel reply at 28.

[693] *See, e.g.,* CTIA comments at 5; Indiana Commission Staff comments at 6; NCTA reply at 10; Teleport comments at 4.

[694] Indiana Commission Staff comments at 6.

[695] Sprint comments at 14.

[696] Cox comments at 7–9.

[697] With regard to the specific issue of paging carriers being charged recurring monthly fees for blocks of numbers, it is necessary to incorporate the record from CC Docket No. 95–185, *In the Matter of Interconnection Between Local Exchange Carriers and Commercial Mobile Radio Service Providers. See, e.g.,* AirTouch Communications comments, CC Docket No. 95–185, at 22 n.22; Arch Communications Group comments, CC Docket No. 95–185, at 7–8, 15, 23–24; PageNet comments, CC Docket No. 95–185, at 22 and App. C.

[698] California Commission comments at 7–8.

administration will be performed in a discriminatory and anticompetitive manner as long as interested parties exercise these functions. For this reason, some commenters urge the Commission to adopt guidelines for CO code administration with which the incumbent LECs must comply prior to transfer of CO code administration to a new NANP administrator. Specifically, they ask the Commission to prohibit incumbent LECs from levying disparate ''code opening'' fees on different carriers. We conclude that charging different ''code opening'' fees for different providers or categories of providers of telephone exchange service constitutes discriminatory access to telephone numbers and therefore violates section 251(b)(3)'s requirement of nondiscrimination. Charging different ''code opening'' fees for different providers or categories of providers of any telecommunications service (not just telephone exchange service) also violates section 202(a)'s prohibition of unreasonable discrimination and also constitutes an ''unjust practice'' and ''unjust charge'' under section 201(b).[699] Further, it is inconsistent with the principle stated in section 251(e)(1), which states that numbers are to be available on an equitable basis. Incumbent LECs have control over CO codes, a crucial resource for any competitor attempting to enter the telecommunications market; incumbent LECs must therefore treat other carriers as the incumbent LECs would treat themselves. To ensure that numbering administration does not become a barrier to competition in the telecommunications marketplace prior to the transfer of NANP administration functions to a neutral number administrator, we conclude that any incumbent LEC charging competing carriers fees for assignment of CO codes may only do so if the incumbent LEC charges one uniform fee for all carriers, including itself or its affiliates.

333. We are explicitly extending this protection, pursuant to section 202, from discriminatory ''code opening'' fees to telecommunications carriers, such as paging carriers, that are not providers of telephone exchange service or telephone toll service, and therefore are not covered by Section 251(b)(3).[700] Paging carriers are increasingly competing with other CMRS providers, and they would be at an unfair competitive disadvantage if they alone could be charged discriminatory code activation fees. For the reasons stated above, we explicitly forbid incumbent LECs from assessing unjust, discriminatory, or unreasonable charges for activating CO codes on any carrier or group of carriers. To the extent that recurring per-number charges represent charges for interconnection, they are governed by the principles set out in the *First Report and Order* in this proceeding. Moreover, the Commission has already stated that telephone companies may not impose recurring charges solely for the use of numbers.[701]

334. We emphasize that incumbent LEC attempts to delay or deny CO code assignments for competing providers of telephone exchange service would violate section 251(b)(3), where applicable, section 202(a), and the Commission's numbering administration guidelines found, *inter alia,* in the *Ameritech Order,* the *NANP Order,* and this *Order.* The Commission expects the incumbent LECs to comply strictly with those guidelines and act in an evenhanded manner as long as they retain their number administration functions. Specifically, incumbent LECs should apply identical standards and procedures for processing all numbering requests, regardless of the identity of the party making the request.

335. Indeed, our delegation of matters related to numbering administration during the transition to a new NANP administrator is generally governed by the Commission's existing objectives and guidelines related to number administration as well as those enumerated in this proceeding. We will monitor closely the actions of Bellcore and the LECs with respect to numbering administration to ensure that they perform their tasks impartially and expeditiously until such tasks are transferred.

C. Cost Recovery for Numbering Administration

1. Background

336. In section 251(e)(2), Congress mandates that ''[t]he cost of establishing telecommunications numbering administration arrangements and number portability shall be borne by all telecommunications carriers on a competitively neutral basis as determined by the Commission.'' [702] In the *NANP Order,* the Commission: (1) Directed that the costs of the new impartial numbering administrator be recovered through contributions by all communications providers; (2) concluded that the gross revenues of each communications provider will be used to compute each provider's contribution to the new numbering administrator; and (3) concluded that the NANC will address the details concerning recovery of the NANP administration costs.[703] In the *NPRM,* we found that we did not need to take further action because the Commission had already determined that cost recovery for numbering administration arrangements must be borne by all telecommunications carriers on a competitively neutral basis.[704]

2. Comments

337. Several parties believe that the Commission should take further action with regard to cost recovery for numbering administration.[705] BellSouth states that, states should have the power to authorize cost recovery in conjunction with oversight of central office code implementation activities, until transfer of numbering administration to the NANP.[706]

338. Telecommunications Resellers Association urges us to reconsider the assessment that the costs associated with the administration of telecommunications numbering should be borne by telecommunications carriers on a competitively neutral basis. It asserts that reliance upon gross revenues would result in a double or greater recovery from resale carriers and their customers.[707]

339. Similarly, NCTA urges us to require that companies providing telecommunications services in addition to other services fund NANP administration based on a percentage of their gross telecommunications revenues, and not their revenues from other services. Otherwise, NCTA argues, diversified companies that have relatively little need for NXXs but large gross revenues from other sources may have to fund a disproportionately large share of NANP administration expenses. Also, NCTA notes that the 1996 Act requires ''telecommunications carriers'' to contribute to cost recovery for number administration, but that the *NANP Order* requires recovery from all ''communications providers.'' NCTA requests clarification that only

[699] 47 U.S.C. 251(b)(3); 47 U.S.C. 202(a).

[700] Paging is not ''telephone exchange service'' within the meaning of the Act because it is neither ''intercommunicating service of the character ordinarily furnished by a single exchange'' nor ''comparable'' to such service. *See* 47 U.S.C. 153(47).

[701] *See The Need to Promote Competition and Efficient Use of Spectrum for Radio Common Carrier Services,* Memorandum Opinion and Order, 59 R.R.2d 1275, 1284 (1986).

[702] 47 U.S.C. 251(e)(2).

[703] *NANP Order,* 11 FCC Rcd at 2627–2629.

[704] *NPRM* at para. 259.

[705] *See, e.g.,* BellSouth comments 20; Telecommunications Resellers Association comments at 10; NCTA comments at 11.

[706] BellSouth comments at 20.

[707] Telecommunications Resellers Association comments at 10.

''telecommunications carriers'' as defined by the 1996 Act must contribute to cost recovery for number administration.[708]

340. Other commenters do not believe that it is necessary for the Commission to take additional action with regard to cost recovery for numbering administration.[709] These parties generally agree that the cost recovery approach taken in the *NANP Order* satisfies the 1996 Act's requirements with respect to ensuring nondiscriminatory access to telephone numbers. Several reiterate that the costs of number administration must be borne by all carriers on a competitively neutral basis. GTE states that the *NANP Order* conclusions satisfy the cost recovery requirement of the 1996 Act, if we ensure that those conclusions are implemented in a manner that does not unduly favor or disadvantage any particular industry segment or technology.[710]

341. In its reply comments, PacTel rejects MCI's suggestion that costs of implementing number portability should be reduced or eliminated. In PacTel's view, interim number portability is an essential element of achieving equitable number administration and all parties that benefit from this process should contribute to full cost recovery.[711]

3. Discussion

342. Because of ambiguity between the language of the 1996 Act and language in the *NANP Order,* we are persuaded that further action is necessary to meet the 1996 Act's requirement that cost recovery for number administration be borne by all telecommunications carriers on a competitively neutral basis, and to conform the cost recovery requirements specified in the *NANP Order* to the 1996 Act. First, we require that: (1) Only ''telecommunications carriers,'' as defined in section 3(44), be ordered to contribute to the costs of establishing numbering administration; and (2) such contributions shall be based only on each contributor's gross revenues from its provision of telecommunications services.[712] We note that we have considered the economic impact of our rules in this section on small incumbent LECs and other small entities. We conclude that by basing contributions only on each contributor's gross revenues from its provision of telecommunications services (instead of, for example, imposing a flat fee contribution on all telecommunications carriers), we more equitably apportion the burden of cost recovery for numbering administration.

343. Section 251(e)(2) requires that the costs of telecommunications numbering administration be borne by all telecommunications carriers on a competitively neutral basis. Contributions based on gross revenues would not be competitively neutral for those carriers that purchase telecommunications facilities and services from other telecommunications carriers because the carriers from whom they purchase services or facilities will have included in their gross revenues, and thus in their contributions to number administration, those revenues earned from services and facilities sold to other carriers. Therefore, to avoid such an outcome, we require all telecommunications carriers to subtract from their gross telecommunications services revenues expenditures for all telecommunications services and facilities that have been paid to other telecommunications carriers.[713] It should be noted that this requirement is solely for the purpose of determining a carrier's contribution to numbering administration costs and not for any other purpose, interpretation, or meaning of any other Commission rule such as those contained in parts 32, 36, 51, 64, 65, or 69 of the Commission's rules.

D. Section 271 Competitive Checklist Requirement That the BOCs Provide Non-Discriminatory Access to Numbers for Entry Into In-region InterLATA Services

1. Background and Comments

344. Section 271(c)(2)(B) contains a competitive checklist of requirements governing the access to functions, facilities and services or interconnection that BOCs must provide or generally offer to other competing telecommunications carriers if the BOC wants authority to provide in-region interLATA service. Pursuant to the competitive checklist, BOCs desiring to provide in-region interLATA telecommunications services must afford, ''(u)ntil the date by which telecommunications numbering administration guidelines, plans or rules are established, non-discriminatory access to telephone numbers for assignment to the other carrier's telephone exchange service customers * * * (and) (a)fter that date, (must) compl(y) with such guidelines, plan or rules.''[714] In the *NPRM,* we stated that these measures foster competition by ensuring telecommunications numbering resources are administered in a fair, efficient, and orderly manner.[715] Ameritech asks us to clarify that, by complying with the *NANP Order,* a BOC satisfies the competitive checklist requirement of nondiscriminatory access to numbers.[716] MCI argues that we must ensure that the BOCs comply with section 271(c)(2)(B) and assign NXX codes in a competitively neutral manner.[717]

2. Discussion

345. We decline to address section 271(c)(2)(B) issues in this *Order.* We will consider each BOC's application to enter in-region interLATA services pursuant to section 271(c)(2)(B) on a case by case basis, and will look specifically at the circumstances and business practices governing CO code administration in each applicant's state to determine whether the BOC has complied with section 271(c)(2)(B)(ix).

VI. Final Regulatory Flexibility Analysis

346. As required by Section 603 of the Regulatory Flexibility Act (RFA), 5 U.S.C. 603, an Initial Regulatory Flexibility Analysis (IRFA) was incorporated in the Notice of Proposed Rulemaking (*NPRM*) in this proceeding. The Commission sought written public comments on the proposals in the *NPRM,* including the IRFA. The

[708] NCTA comments at 11.

[709] *See, e.g.,* ACSI comments at 13; ALTS comments at 8; CTIA comments at 8; Frontier comments at 5 n.14; GCI comments at 6; GTE comments at 31; Ohio Consumers' Council comments at 5; PacTel comments at 26.

[710] GTE comments at 31. *See also* PacTel comments at 26.

[711] PacTel reply at 33.

[712] 47 U.S.C. 251(e)(2) also requires that the cost of establishing telecommunications number portability shall be borne by all telecommunications carriers on a competitively neutral basis. We note that cost recovery for number portability was addressed in the *Number Portability Order.*

[713] See *Assessment and Collection of Regulatory Fees for Fiscal Year 1995,* Report and Order, 10 FCC Rcd 13512, at 13558–59 (1995) (*Regulatory Fees Order*). 61 FR 40155 (August 1, 1996). In the *Regulatory Fees Order,* we stated that, in order to avoid imposing a double payment burden on resellers, we would permit interexchange carriers to subtract from their reported gross interstate revenues any payments made to underlying carriers for telecommunications facilities or services. *Id.* Our action here is consistent with that taken in the *Regulatory Fees Order.* We note that the gross telecommunications services revenues referenced in this discussion are not limited to gross interstate revenues.

[714] 47 U.S.C. 271(c)(2)(B)(ix).

[715] *NPRM* at para. 251.

[716] Ameritech comments at 23. *See also* NYNEX comments at 18.

[717] MCI comments at 10. We also note that in its petition for declaratory ruling filed July 12, 1996, TCG has asked the Commission to require, as part of a BOC's application to provide in-region interLATA services pursuant to section 271, a demonstration that numbering resources are available to competing local carriers. *See supra* n.616.

Commission's Final Regulatory Flexibility Analysis (FRFA) in this *Order* conforms to the RFA, as amended by the Contract With America Advancement Act of 1996, (CWAAA), Public Law No. 104–121, 110 Stat. 847 (1996).[718]

A. Need for and Purpose of This Action

347. The Commission, in compliance with section 251(d)(1), promulgates the rules in this *Order* to ensure the prompt implementation of section 251, which is the local competition provision. Congress sought to establish through the 1996 Act ''a pro-competitive, de-regulatory national policy framework'' for the United States telecommunications industry.[719] Three principal goals of the telecommunications provisions of the 1996 Act are: (1) Opening the local exchange and exchange access markets to competition; (2) promoting increased competition in telecommunications markets that already are open to competition, including, particularly, the long distance services market; and (3) reforming our system of universal service so that universal service is preserved and advanced as the local exchange and exchange access markets move from monopoly to competition.

348. The rules adopted in this *Order* implement the first of these goals—opening the local exchange and exchange access markets to competition by eliminating certain operational barriers to competition. The objective of the rules adopted in this *Order* is to implement as quickly and effectively as possible the national telecommunications policies embodied in the 1996 Act and to promote the pro-competitive, deregulatory markets envisioned by Congress.[720] We are mindful of the balance that Congress struck between this goal and its concern for the impact of the 1996 Act on small local exchange carriers, particularly rural carriers. This balance is evidenced in section 251(f).

B. Summary of Issues Raised by Public Comments Made in Response to the Initial Regulatory Flexibility Analysis

349. *Summary of Initial Regulatory Flexibility Analysis (IRFA).* In the *NPRM,* the Commission performed an IRFA.[721] In the IRFA, the Commission found that the rules it proposed to adopt in this proceeding may have a significant impact on a substantial number of small businesses as defined by section 601(3) of the RFA. The Commission stated that its regulatory flexibility analysis was inapplicable to incumbent LECs because such entities are dominant in their field of operation. The Commission noted, however, that it would take appropriate steps to ensure that special circumstances of smaller incumbent LECs are carefully considered in our rulemaking. Finally, the IRFA solicited comment on alternatives to our proposed rules that would minimize the impact on small entities consistent with the objectives of this proceeding.

1. Treatment of Small LECs

350. *Comments.* The Small Business Administration (SBA), Rural Tel. Coalition, and CompTel maintain that the Commission violated the RFA when it sought to exclude incumbent LECs from regulatory flexibility consideration without first consulting the SBA to establish a definition of ''small business.''[722] Rural Tel. Coalition and CompTel also argue that the Commission failed to explain its statement that ''incumbent LECs are dominant in their field'' or how that finding was reached.[723] Rural Tel. Coalition states that the lack of such analysis is inappropriate because incumbent LECs are now facing competition from a variety of sources, including wireline and wireless carriers. Rural Tel. Coalition recommends that the Commission abandon its determination that incumbent LECs are dominant, and perform the regulatory flexibility analysis for incumbent LECs having fewer than 1500 employees.[724]

351. *Discussion.* In essence, the SBA and the Rural Tel. Coalition argue that we exceeded our authority under the RFA by certifying all incumbent LECs as dominant in their field of operations, and therefore concluding on that basis that they are not small businesses under the RFA. They contend that the authority to make a size determination rests solely with the SBA, and that by excluding a group from the scope of regulatory flexibility analysis the Commission makes an unauthorized size determination.[725] Neither the SBA nor the Rural Tel. Coalition cite any specific authority for this latter proposition.

2. Other Issues

352. We have found incumbent LECs to be ''dominant in their field of operations'' since the early 1980's and consequently have consistently since that time certified under the RFA[726] that incumbent LECs are not subject to regulatory flexibility analyses because they are not small businesses.[727] We have made similar determinations in other areas.[728] We recognize the SBA's special role and expertise with regard to the RFA, and intend to continue to consult with the SBA to ensure that the Commission is fully implementing the RFA. Although we are not fully persuaded on the basis of this record that our prior practice has been incorrect, in light of the special concerns raised by the SBA, the Rural Tel. Coalition, and CompTel in this proceeding, we will, nevertheless, include small incumbent LECs in this FRFA to remove any possible issue of RFA compliance. We, therefore, need not address directly the Rural Tel. Coalition's arguments that incumbent LECs are not dominant.[729]

353. *Comments.* Parties raised several other issues in response to the Commission's IRFA in the *NPRM.* The SBA and CompTel contend that commenters should not be required to separate their comments on the IRFA from their comments on the other issues raised in the *NPRM.*[730] SBA maintains that separating RFA comments and discussion from the rest of the comments ''isolates'' the regulatory flexibility analysis from the remainder of the discussion, thereby handicapping the Commission's analysis of the impact of the proposed rules on small businesses.[731] The SBA further suggests that our IRFA failed to: (1) Give an adequate description of the projected reporting, recordkeeping, and other compliance requirements of the proposed rules, including an estimate of the classes of small entities which will be subject to the requirement and the professional skills necessary to prepare such reports or records;[732] and (2) describe significant alternatives that

[718] Subtitle II of the CWAAA is ''The Small Business Regulatory Enforcement Fairness Act of 1996'' (SBREFA), codified at 5 U.S.C. 601 *et. seq.*

[719] S. Conf. Rep. No. 104–230, 104th Cong., 2d Sess. 1 (1996).

[720] *Id.*

[721] *NPRM* at paras. 274–287.

[722] SBA RFA comments at 3–5; Rural Tel. Coalition reply at 38–39; CompTel reply at 46.

[723] Rural Tel. Coalition reply at 39.

[724] Rural Tel. Coalition reply at 40.

[725] SBA RFA comments at 4–5 (citing 15 U.S.C. 632(a)(2)); Rural Tel. Coalition reply at 38.

[726] *See* 5 U.S.C. 605(b).

[727] *See, e.g., Expanded Interconnection with Local Telephone Company Facilities,* 6 FCC Rcd 5809 (1991); *MTS and WATS Market Structure,* 2 FCC Rcd 2953, 2959 (1987) (citing *MTS and WATS Market Structure,* 93 F.C.C.2d 241, 338–39 (1983)).

[728] *See, e.g., Implementation of Sections of the Cable Television Consumer Protection Act of 1992: Rate Regulation,* 10 FCC Rcd 7393, 7418 (1995). 60 FR 63492 (December 11, 1995).

[729] Rural Tel. Coalition reply at 39–40.

[730] SBA RFA comments at 2–3; CompTel reply at 46.

[731] *Id.*

[732] SBA RFA comments at 5–6, *citing* 5 U.S.C. 603(b)(4).

minimize the significant economic impact of the proposal on small entities, including exemption from coverage of the rule.[733] SBA also asserts that none of the alternatives in the *NPRM* are designed to minimize the impact of the proposed rules on small businesses.

354. The Idaho Public Utilities Commission argues that the Commission's rules will be devised for large carriers and therefore will be ''*de facto*'' burdensome to Idaho's incumbent LECs and probably to potential new entrants, which may be small companies.[734] Therefore, Idaho requests that state commissions retain flexibility to address the impact of our rules on smaller incumbent LECs.

355. The Small Cable Business Association (SCBA) contends that the Commission's IRFA is inadequate because it does not state that small cable companies are among the small entities affected by the proposed rules.[735] In its comments on the IRFA, SCBA refers to its proposal that the Commission establish the following national standards for small cable companies: (1) The definition of ''good faith'' negotiation; (2) the development of less burdensome arbitration procedures for interconnection and resale; and (3) the designation of a small company contact person at incumbent LECs and state commissions. The SCBA also asserts that the Commission must adopt national standards to guide state commissions in their implementation of section 251(f),[736] the rural telephone company exemption. The *First Report and Order* and its FRFA discusses issues raised by the SCBA regarding its proposal that the Commission establish national standards for certain provisions of the rules that affect small cable companies. Accordingly, we do not repeat those analyses in this FRFA.

356. *Discussion*. We disagree with the SBA's assessment of our IRFA. Although the IRFA referred only generally to the reporting and recordkeeping requirements imposed on incumbent LECs, our Federal Register notice set forth in detail the general reporting and recordkeeping requirements as part of our Paperwork Reduction Act statement.[737] The IRFA also sought comments on the many alternatives discussed in the body of the *NPRM*, including the statutory exemption for certain rural telephone companies.[738] The numerous general public comments concerning the impact of our proposal on small entities in response to our notice, including comments filed directly in response to the IRFA,[739] have enabled us to prepare this FRFA. Thus, we conclude that the IRFA was sufficiently detailed to enable parties to comment meaningfully on the proposed rules and, thus, for us to prepare this FRFA. We have been working with, and will continue to work with the SBA, to ensure that both our IRFAs and FRFAs fully meet the requirements of the RFA.

357. The SBA also objects to the *NPRM's* requirement that responses to the IRFA be filed under a separate and distinct heading, and proposes that we integrate RFA comments into the body of general comments on a rule.[740] Almost since the adoption of the RFA, we have requested that IRFA comments be submitted under a separate and distinct heading.[741] Neither the RFA nor the SBA's rules prescribe the manner in which comments may be submitted in response to an IRFA [742] and, in such circumstances, it is well established that an administrative agency can structure its proceedings in any manner that it concludes will enable it to fulfill its statutory duties.[743] Based on our past practice, we find that separation of comments responsive to the IRFA facilitates our preparation of a compulsory summary of such comments and our responses to them, as required by the RFA. Comments on the impact of our proposed rules on small entities have been integrated into our analysis and consideration of the final rules. We therefore reject SBA's argument that we improperly required commenters to include their comments on the IRFA in a separate section.

358. We also reject SBA's assertion that none of the alternatives in the *NPRM* were designed to minimize the impact of the proposed rules on small businesses and the Idaho Public Utilities Commission's assertion that our rules will be burdensome on new entrants. For example, we proposed that incumbent LECs be required to disclose all information relating to network design and technical standards and information concerning changes to the network that affect interconnection facilities.[744] This proposal allows a potential competitor, that may be a small entity, to collect the information necessary to achieve and maintain efficient interconnection. Thus, the competitor can enter the market by relying, in part or entirely, on the incumbent LEC's facilities. Reduced operational entry barriers are designed to provide reasonable opportunities for new entrants, particularly small entities, to enter the market by minimizing the initial investment needed to begin providing service.

359. In addition, we disagree with the Idaho Public Utilities Commission's contention that the rules devised by the Commission will be burdensome to the majority of Idaho's incumbent LECs. We believe section 251(f) and the rules we have crafted provide states with significant flexibility to ''deal with the needs of individual companies in light of public interest concerns,'' as requested by the Idaho Commission. We note that, pursuant to section 251(f), smaller LECs may petition their state commissioners for suspension or modification of the implementation schedule for toll dialing parity established under section 251(b)(3). Although we have required incumbent LECs to continue performing their current functions related to the administration of numbers, this requirement will expire when numbering administration is transferred to the new North American Number Plan (NANP) Administrator, pursuant to Section 251(e). As incumbent LECs are currently performing these functions and we have received no comments from incumbent LECs objecting to this requirement, we do not consider it burdensome for them to continue to perform these tasks during the transition period.

360. In addition, we disagree with SCBA's assertion that the IRFA was deficient because it did not identify small cable operators as entities that would be affected by the proposed rules. The IRFA in the *NPRM* states: ''Insofar as the proposals in this Notice apply to telecommunications carriers other than incumbent LECs (generally interexchange carriers and new LEC entrants), they may have a significant impact on a substantial number of small entities.'' [745] The phrase ''new LEC entrants'' clearly encompasses small cable operators that become providers of

[733] SBA RFA comments at 7–8, *citing* 5 U.S.C. 603(c).

[734] Idaho Commission comments at 15.

[735] SCBA RFA comments at 1.

[736] *Id.* at 1–2.

[737] NPRM, summarized at 61 FR 18311, 18312 (April 25, 1996).

[738] 47 U.S.C. 251(f).

[739] *See* SBA RFA comments; Rural Tel. Coalition reply at 38–41; Idaho Public Utilities Commission comments at 15; SCBA RFA comments; CompTel reply at 45–46.

[740] SBA RFA comments at 2.

[741] *See, e.g., Inquiry into the Development of Regulatory Policy in Regard to Direct Broadcast Satellites*, 86 F.C.C.2d 719, 755 (1981).

[742] *See* 5 U.S.C. 603 (IRFA requirements).

[743] *See Vermont Yankee Nuclear Power Corp.* v. *Natural Resources Defense Council, Inc.*, 435 U.S. 519, 524–25 (1978) (*citing FCC* v. *Schreiber*, 381 U.S. 279, 290 (1965) and *FCC* v. *Pottsville Broadcasting Co.*, 309 U.S. 134, 138 (1940)).

[744] *NPRM* paras. 189–190.

[745] *NPRM* para. 277.

local exchange service. The *NPRM* even identifies cable operators as potential new entrants.[746] Thus, the record shows that we have identified small cable operators as entities that would be affected by the proposed rules.

C. Description and Estimate of the Small Entities Subject to the Rules

361. The RFA defines ''small entity'' to include the definition of ''small business concern'' under the Small Business Act, 15 U.S.C. 632.[747] Under the Small Business Act, a ''small business concern'' is one that: (1) Is independently owned and operated; (2) is not dominant in its field of operation; and (3) meets any additional criteria established by the Small Business Administration.[748] The SBA has defined companies listed under Standard Industrial Classification (SIC) categories 4812 (Radiotelephone Communications)[749] and 4813 (Telephone Communications, Except Radiotelephone) to be small entities when they have fewer than 1,500 employees.[750] The SBA has defined companies listed under the SIC category 7379 (Business Services, not otherwise classified) to be small entities when they have annual receipts of less than five million dollars.[751] These standards also apply in determining whether an entity is a small business for purposes of the RFA.

362. The rules we adopt today regarding dialing parity and nondiscriminatory access apply to all LECs. The rules regarding public disclosure of changes to local networks apply to all incumbent LECs. Finally, the rules regarding numbering administration impose financial obligations on all telecommunications carriers. These rules also affect IXCs, providers of cellular, broadband PCS, and geographic area 800 MHz and 900 MHz specialized mobile radio services, including licensees who have obtained extended implementation authorizations in the 800 MHz or 900 MHz SMR services, either by waiver or under § 90.629 of the Commission's rules,[752] which may be small business concerns. However, these rules will apply to SMR licensees only if they offer real-time, two-way voice service that is interconnected with the public switched network. Additional business entities affected by this rulemaking include providers of telephone toll service, providers of telephone exchange service, independent operator service providers, independent directory assistance providers, independent directory listing providers, independent directory database managers, and resellers of these services. These entities could be small business concerns.

363. Consistent with our prior practice, we shall continue to exclude small incumbent LECs from the definition of a small entity for the purpose of this FRFA. Nevertheless, as mentioned above, we include small incumbent LECs in our FRFA. Accordingly, our use of the terms ''small entities'' and ''small businesses'' does not encompass ''small incumbent LECs.'' We use the term ''small incumbent LECs'' to refer to any incumbent LECs that arguably might be defined by SBA as ''small business concerns.''[753]

364. *Local Exchange Carriers.* Neither the Commission nor SBA has developed a definition of small providers of local exchange services. The closest applicable definition under SBA rules is for telephone communications companies other than radiotelephone (wireless) companies, SIC category 4813. For the purposes of revenue reporting, 1,347 companies reported doing business as LECs at the end of 1994.[754] Although it seems certain that some of these carriers are not independently owned and operated, or have more than 1,500 employees, we are unable at this time to estimate with any more particularity the number of LECs that would qualify as small business concerns. Consequently, we estimate that there are fewer than 1,347 small incumbent LECs that may be affected by the decisions and rules adopted in this *Order*.

365. *Interexchange Carriers.* Neither the Commission nor SBA has developed a definition of small entities that would apply specifically to providers of interexchange services (IXCs). The closest applicable definition under SBA rules is for telephone communications companies other than radiotelephone (wireless) companies, SIC category 4813. The most reliable source of information regarding the number of IXCs nationwide of which we are aware appears to be the data that we collect annually in connection with Telecommunications Relay Service (TRS). According to our most recent data, 97 companies reported that they were engaged in the provision of interexchange services.[755] Although it seems certain that some of these carriers are not independently owned and operated, or have more than 1,500 employees, we are unable at this time to estimate with greater precision the number of IXCs that would qualify as small business concerns under SBA's definition. Consequently, we estimate that there are fewer than 97 small entity IXCs that may be affected by the decisions and rules adopted in this *Order*.

366. *Cellular Service Providers.* Neither the Commission nor SBA has developed a definition of small entities specifically applicable to providers of cellular services. The closest applicable definition under SBA rules is for telephone communications companies other than radiotelephone (wireless) companies. The most reliable source of information regarding the number of cellular service carriers nationwide of which we are aware appears to be the data that we collect annually in connection with TRS. According to our most recent data 789 companies reported that they were engaged in the provision of cellular services.[756] Although it seems certain that some of these carriers are not independently owned and operated, or have more than 1,500 employees, we are unable at this time to estimate with greater precision the number of cellular service carriers that would qualify as small business concerns under SBA's definition. Consequently, we estimate that there are fewer than 789 small entity cellular service carriers that may be affected by the decision and rules adopted in this *Order*.

367. *Broadband PCS Licensees.* The broadband PCS spectrum is divided into six frequency blocks designated A through F. Pursuant to 47 CFR 24.720(b), the Commission has defined ''small entity'' in the auctions for Blocks C and F as a firm that had average gross revenues of less than $40 million in the three previous calendar years. This regulation defining ''small entity'' in the context of broadband PCS auctions has been approved by the SBA.[757] The

[746] *NPRM* para. 6.

[747] *See* 5 U.S.C. 601(6) (incorporating by reference the definition of ''small business concern'' in 5 U.S.C. 632).

[748] *See* 15 U.S.C. 632(1)(a).

[749] 13 CFR 121.201, Standard Industrial Classification (SIC) Code 4812.

[750] 13 CFR 121.201, Standard Industrial Classification (SIC) Code 4813.

[751] 13 CFR 121.201, Standard Industrial Classification (SIC) Code 7379.

[752] 47 CFR 90.629.

[753] *See* 13 CFR § 121.210 (SIC 4813).

[754] Federal Communications Commission, CCB, Industry Analysis Division, *Telecommunications Industry Revenue: TRS Fund Worksheet Data*, Tbl. 21 (Average Total Telecommunications Revenue Reported by Class of Carrier) (February 1996).

[755] *Id.*

[756] 13 CFR 121.201, Standard Industrial Classification (SIC) Code 4812.

[757] *See Implementation of Section 309(j) of the Communications Act—Competitive Bidding*, PP Docket No. 93–253, Fifth Report and Order, 9 FCC Rcd 5532, 5581–84 (1994) 59 FR 37566 (July 22, 1994).

Commission has auctioned broadband PCS licenses in Blocks A, B, and C. We do not have sufficient data to determine how many small businesses bid successfully for licenses in Blocks A and B. There were 90 winning bidders that qualified as small entities in the Block C auction. Based on this information, we conclude that the number of broadband PCS licensees affected by the decisions in this *Order* includes, at a minimum, the 90 winning bidders that qualified as small entities in the Block C broadband PCS auction.

368. At present, no licenses have been awarded for Blocks D, E, and F of broadband PCS spectrum. Therefore, there are no small businesses currently providing these services. A total of 1,479 licenses will be awarded, however, in the D, E, and F Block broadband PCS auctions, which are scheduled to begin on August 26, 1996. Eligibility for the 493 F Block licenses is limited to entrepreneurs with average gross revenues of less than $125 million. We cannot estimate the number of these licenses that will be won by small entities, nor how many small entities will win D or E Block licenses. Given the facts that nearly all radiotelephone companies have fewer than 1,000 employees [758] and that no reliable estimate of the number of prospective D, E, and F Block licensees can be made, we assume, for purposes of our evaluations and conclusions in this FRFA, that all of the licenses will be awarded to small entities, as that term is defined by the SBA. Broadband PCS licensees are affected by the decisions and rules adopted in this *Order* to the extent that they provide telephone exchange service.

369. *SMR Licensees*. Pursuant to 47 CFR 90.814(b)(1), the Commission has defined ''small entity'' in auctions for geographic area 800 MHz and 900 MHz SMR licenses as a firm that had average gross revenues of less than $15 million in the three previous calendar years. This definition of a ''small entity'' in the context of 800 MHz and 900 MHz SMR has been approved by the SBA.[759]

370. The rule adopted in this *Order* applies to SMR providers in the 800 MHz and 900 MHz bands that either hold geographic area licenses or have obtained extended implementation authorizations. We do not know how many firms provide 800 MHz or 900 MHz geographic area SMR service pursuant to extended implementation authorizations, nor how many of these providers have annual revenues of less than $15 million. Since the RFA amendments were not in effect until the record in this proceeding was closed, the Commission was unable to request information regarding the number of small businesses in this category. We do know that one of these firms has over $15 million in revenues. We assume, for purposes of our evaluations and conclusions in this FRFA, that all of the remaining extended implementation authorizations may be held by small entities, which may be affected by the decisions and rules adopted in this *Order*.

371. The Commission recently held auctions for geographic area licenses in the 900 MHz SMR band. There were 60 winning bidders who qualified as small entities in the 900 MHz auction. Based on this information, we conclude that the number of geographic area SMR licensees affected by the rule adopted in this *Order* includes these 60 small entities. No auctions have been held for 800 MHz geographic area SMR licenses. Therefore, no small entities currently hold these licenses. A total of 525 licenses will be awarded for the upper 200 channels in the 800 MHz geographic area SMR auction. The Commission, however, has not yet determined how many licenses will be awarded for the lower 230 channels in the 800 MHz geographic area SMR auction. There is no basis to estimate, moreover, how many small entities within the SBA definition will win these licenses. Because nearly all radiotelephone companies have fewer than 1,000 employees and no reliable estimate of the number of prospective 800 MHz licensees can be made, we assume, for purposes of our evaluations and conclusions in this FRFA, that all of the licenses will be awarded to small entities, as defined by the SBA. Those SMR licensees that provide telephone exchange service will be affected by the decisions in this *Order*.

372. *Providers of Telephone Toll Service, Providers of Telephone Exchange Service*. Neither the Commission nor the SBA has developed a definition of small entities applicable to providers of telephone toll service and telephone exchange service. According to the 1992 Census, there were approximately 3,497 firms engaged in providing telephone services, as defined therein, for at least a year.[760] This number contains a variety of different categories of carriers, including local exchange carriers, interexchange carriers, competitive access providers, cellular carriers, mobile service carriers, operator service providers, pay telephone operators, PCS providers, covered SMR providers, providers of telephone toll service, providers of telephone exchange service, and resellers. It seems certain that some of those 3,497 telephone service firms may not qualify as small businesses because they are not ''independently owned and operated.'' [761] It seems reasonable to conclude, therefore, that fewer than 3,497 telephone service firms are providers of telephone toll service or providers of telephone exchange service and are small entities that may be affected by this *Order*.

373. *Independent Operator Service Providers, Independent Directory Assistance Providers, Independent Directory Listing Providers, and Independent Directory Database Managers*. We were unable to obtain reliable data regarding the number of entities that provide these telecommunications services or how many of these are small entities. The Commission has not developed a definition of small entities applicable to telecommunications service providers. Therefore, the closest applicable definition of a small entity providing telecommunications services is the definition under SBA rules applicable to business services companies, SIC 7389, which defines a small entity to be a business services company with annual receipts of less than five million dollars. U.S. Census data provides that 46,289 firms providing business services had annual receipts of 5 million dollars or less.[762] Because it seems unlikely that all of the business services firms would meet the other criteria, it seems reasonable to conclude that fewer than 46,289 firms may be small entities that might be affected by our *Order*.

374. *Resellers*. Neither the Commission nor SBA has developed a definition of small entities specifically applicable to resellers. The closest

[758] *See* United States Department of Commerce, Bureau of the Census, *Standard Industrial Classification Manual* (1992) (*1992 Census*) SIC Code 4812.

[759] *See Amendment of Parts 2 and 90 of the Commission's Rules to Provide for the Use of 200 Channels Outside the Designated Filing Areas in the 896–901 MHz and the 935–940 MHz Bands Allotted to the Specialized Mobile Radio Pool*, PR Docket No. 89–583, Second Order on Reconsideration and Seventh Report and Order, 11 FCC Rcd 2639, 2693–702 (1995) 60 FR 48913 (September 21, 1995); *Amendment of Part 90 of the Commission's Rules to Facilitate Future Development of SMR Systems in the 800 MHz Frequency Band*, PR Docket No. 93–144, First Report and Order, Eighth Report and Order, and Second Further Notice of Proposed Rulemaking, 11 FCC Rcd 1463 (1995) 61 FR 6212 (February 16, 1996).

[760] *See* United States Department of Commerce, Bureau of the Census, *1992 Census of Transportation, Communications, and Utilities; Establishment and Firm Size*, at Firm Size 1–123 (1995) (*1992 Census*).

[761] 15 U.S.C. 632(a)(1).

[762] *1992 Census*, Table 2D, SIC Code 7389.

applicable SBA definition for a reseller is a telephone communications company, SIC category 4813. However, the most reliable source of information regarding the number of resellers nationwide of which we are aware appears to be the data that the Commission collects annually in connection with TRS. For the purposes of revenue reporting, 206 companies reported doing business as resellers at the end of 1994.[763] Although it seems certain that some of these companies are not independently owned and operated, or have more than 1,500 employees, we are unable at this time to estimate with greater precision the number of resellers that would qualify as small entities or small incumbent LEC concerns under SBA's definition. Consequently, we estimate that there are fewer than 206 small entity resellers that may be affected by the decisions and rules adopted in this *Order*.

375. *Telephone Companies.* U.S. Census data provides that, at the end of 1992, there were 3,497 firms engaged in providing telephone services, as defined therein, for at least a year.[764] This number contains a variety of different categories of carriers, including local exchange carriers, interexchange carriers, competitive access providers, cellular carriers, mobile service, carriers, operator service providers, pay telephone operators, PCS providers, covered SMR providers, providers of telephone toll service, providers of telephone exchange service, and resellers. It seems certain that some of those 3,497 telephone service firms may not qualify as small businesses because they are not ''independently owned and operated.'' [765] It seems reasonable to conclude, therefore, that fewer than 3,497 telephone service firms are telephone companies and small entities that may be affected by this *Order*.

376. *Cable System Operators.* SBA has developed a definition of small entities for cable and other pay television services, which includes all such companies generating less than $11 million in revenues annually. This definition includes cable systems operators, closed circuit television services, direct broadcast satellite services, multipoint distribution systems, satellite master antenna systems, and subscription television services. According to the Census Bureau, there were 1,323 such cable and other pay television services generating less than $11 million in revenue that were in operation for at least one year at the end of 1992.[766] The Commission has developed its own definition of a small cable system operator for the purposes of rate regulation, which has been approved by SBA.[767] Under the Commission's rules, a ''small cable company is one serving fewer than 400,000 subscribers nationwide.'' Based on our most recent information, we estimate that there were 1,439 cable operators that qualified as small cable system operators at the end of 1995. Since then, some of those companies may have grown to serve over 400,000 subscribers, and others may have been involved in transactions that caused them to be combined with the other cable operators. Consequently, we estimate that there are fewer than 1,439 small entity cable companies that may be affected by the decisions and rules adopted in this *Order*.

377. The Communications Act of 1934 also contains a definition of a small cable system operator, which is ''a cable operator that, directly or through an affiliate, serves in the aggregate fewer than 1 percent of all subscribers in the United States and is not affiliated with any entity or entities whose gross annual revenues in the aggregate exceed $250,000,000.'' [768] There were 63,196,310 basic cable subscribers at the end of 1995, and 1,450 cable system operators serving fewer than 1 percent (631,960) of subscribers.[769] Although it seems certain that some of these cable system operators are affiliated with entities whose gross annual revenues exceed $250,000,000, we are unable at this time to estimate with greater precision the number of cable systems operators that would qualify as small cable operators under the definition in the Communications Act of 1934.

D. Summary of Projected Reporting, Recordkeeping and Other Compliance Requirements and Their Effect on Small Businesses and Steps Taken to Minimize the Significant Economic Impact on Small Entities and Alternatives Considered

378. *Structure of the Analysis.* In this section of the FRFA, we analyze the projected reporting, recordkeeping, and other compliance requirements that may apply to small entities as a result of this *Order*.[770] As a part of this discussion, we mention some of the types of skills that will be needed to meet the new requirements. We also describe the steps taken to minimize the economic impact of our decisions on small entities, including the significant alternatives considered and rejected.[771] Due to the size of this *Order*, we set forth our analysis separately for individual sections of the *Order*, using the same headings as were used above in the corresponding sections of the *Order*.

379. To the extent that any statement contained in this FRFA is perceived as creating ambiguity with respect to our rules or statements made in preceding sections of this *Order*, the rules and statements set forth in those preceding sections shall be controlling.

380. *Dialing Parity Requirements.* The dialing parity provisions of section 251(b)(3) entitle customers to choose different carriers for their local exchange, intraLATA toll, and interLATA toll services without the burden of dialing access codes. Each LEC is required to provide dialing parity to providers of telephone exchange and telephone toll service with respect to all telecommunications services that require dialing to route a call. This obligation encompasses international, interstate, intrastate, local and toll services.

381. *Summary of Projected Reporting, Recordkeeping and Other Compliance Requirements.* In order to comply with the guidelines and minimum federal standards established in this *Order*, each LEC must implement toll dialing parity utilizing the ''full 2–PIC'' presubscription method and following the mandated timetable for implementation of toll dialing parity. Although no timetable was adopted for implementing local dialing parity it is expected that it will be achieved through LECs' compliance with other section 251 requirements. LECs may recover the incremental costs of implementing local and toll dialing parity such as the costs of dialing parity-specific switch software, hardware, signalling system upgrades and necessary consumer education. These costs will be recovered from all providers of telephone exchange service and telephone toll service in the area served by the LEC, including the LEC, through the use of a competitively-neutral allocator established by each state. Compliance with these

[763] Federal Communications Commission, CCB, Industry Analysis Division, *Telecommunications Industry Revenue: TRS Fund Worksheet Data*, Tbl. 21 (Average Total Telecommunications Revenue Reported by Class of Carrier) (February 1996).

[764] *See* United States Department of Commerce, Bureau of the Census, *1992 Census of Transportation, Communications, and Utilities; Establishment and Firm Size*, at Firm Size 1–123 (1995) (*1992 Census*).

[765] 15 U.S.C. 632(a)(1).

[766] *1992 Census, supra*, at Firm Size 1–123.

[767] Small Bus. Admin., *13 CFR part 121—Small Business Size Regulations*, Proposed Rules, 60 FR 57982, 57988 (November 24, 1995).

[768] 47 U.S.C. § 543(m)(2).

[769] Paul Kagan Associates, Inc., *Cable TV Investor*, Feb. 29, 1996 (based on figures for December 30, 1995).

[770] *See* 5 U.S.C. 604(a)(4).

[771] *See* 5 U.S.C. 604(a)(5).

requirements may entail the use of engineering, technical, operational, and accounting skills.

382. *Steps Taken to Minimize the Significant Economic Impact on Small Entities and Small Incumbent LECs, and Alternatives Considered.* This *Order* adopts broad guidelines and minimum federal standards for toll dialing parity so that LECs and competing providers of telephone toll service, many of whom will be small business entities, will not be subject to an array of differing state standards and timetables requiring them to research and tailor their operations to the unique requirements of each state.

383. First, we required all LECs to implement toll dialing parity based on LATA boundaries.[772] Non-BOC LECs, including many smaller LECs, that implement intraLATA and interLATA toll dialing parity may choose whichever LATA within their state that they deem to be most appropriate to define the area within which they will offer intraLATA toll dialing parity. State commissions, in ruling upon such a choice of LATA association, shall determine whether the proposed LATA association is in the public interest. Because many smaller LECs have not been subject to LATA boundary distinctions, we also gave states the flexibility to take such factors into account and to require that toll dialing parity be based on state rather than LATA boundaries in their jurisdictions. Insofar as a state determines that presubscription should occur along state, rather than LATA, boundaries, we anticipate that such a determination will assist smaller LECs, in particular, by permitting those LECs to define their service markets based on a geographic distinction that is familiar to consumers.

384. In addition, we adopted the ''full 2–PIC'' nationwide presubscription method for implementing the toll dialing parity requirements.[773] In making this decision we considered a number of methodologies, including the ''modified 2–PIC,'' ''the multi-PIC'' and the ''smart-PIC'' methods. We concluded that the ''modified 2–PIC'' would limit the number of competitive service providers that could participate in the market and that the ''multi-PIC'' method had not yet proven to be technically and economically feasible. As the ''full 2–PIC'' method is widely available and well defined, we noted that LECs, many of which are small entities, would not be forced to purchase and maintain an expensive, untested, and new technology. The *Order* provides that, until the Commission considers the use of the ''multi-PIC'' or ''smart-PIC methods,'' states may impose such additional requirements only after evaluating the technical feasibility and economic impact of those requirements on smaller LECs in their jurisdictions.

385. We instituted a federal toll dialing parity implementation schedule rather than allowing states to implement their own schedules.[774] This federally-mandated plan will provide certainty for competitors, some of which may be small business entities, seeking to become telephone toll service providers. Both LECs and competing providers of telephone toll service will be able to develop business plans and advertising strategies based upon specific timelines. This ability to plan ahead is cost-efficient and levels the playing field for all seeking to participate in the marketplace.

386. We also concluded that a LEC may not accomplish toll dialing parity by automatically assigning toll customers to itself, to a customer's currently presubscribed interLATA or interstate toll carrier, or to any other carrier except when, in a state that already has implemented intrastate, intraLATA toll dialing parity, the subscriber has selected the same interLATA and intraLATA, or interstate and intrastate, presubscribed carrier.[775] This requirement prevents a carrier from automatically designating itself as a toll carrier without notifying the customer of the opportunity to choose an alternative carrier, one or more of which may be a small business.

387. Lastly, we implemented national rules for the recovery of dialing parity costs.[776] Although it was suggested that these costs be borne only by new entrants, and not incumbent LECs, we determined that the network upgrades necessary to achieve dialing parity should be recovered on a competitively-neutral basis. A competitively neutral cost recovery mechanism prevents incumbent LECs from imposing excessive fees upon competing entrants, some of which may be small businesses. The imposition of excessive fees could constitute an impediment to entry into the intraLATA toll market by small entities that lack extensive financial resources and could reinforce the marketplace dominance of established LECs. A competitively-neutral cost recovery mechanism also benefits small LECs that might otherwise have been unduly burdened by a cost allocation plan requiring an equal payment from each entity.

388. *Nondiscriminatory Access Provisions.* Under section 251(b)(3), all LECs are required to allow competing providers of telephone exchange service and telephone toll service access to telephone numbers, operator services, directory assistance, and directory listings that is at least equal in quality to the access the LEC itself receives, without unreasonable dialing delays. LECs are required to make available to competing providers operator services and directory assistance and all adjunct features necessary for the use of these services.

389. *Summary of Projected Reporting, Recordkeeping, and Other Compliance Requirements.* In order to comply with the nondiscriminatory access provisions all LECs must share subscriber listing information with their competitors in ''readily accessible'' tape or electronic formats. This information must be provided upon request and in a timely manner.[777] In addition, each LEC must process all calls from competing providers, including calls to the LEC's operator services and directory assistance, on an equal basis as calls originating from the providing LEC.[778] LECs that refuse to comply with reasonable, technically feasible requests from competing providers for ''rebranding'' of resold operator services or directory assistance are presumed to be unlawfully restricting access to these services.[779] Compliance with these requests may require the use of engineering, computer, accounting, and legal skills.

390. *Steps Taken to Minimize Significant Economic Impact on Small Entities and Small Incumbent LECs, and Alternatives Considered.* The entitlement to access, on a nondiscriminatory basis, to telephone numbers, operator services, directory assistance and directory listings will benefit providers competing with incumbent LECs. Many of these competitors will be small business entities. The requirement that LECs make their operator assistance and directory listing services available to competitors may allow those competitors to save the time and money it would take to build similar information resources. Additionally, these competing providers will benefit because they will be able to offer consumers at least the same quality of operator service and directory assistance that is provided by the established LEC.

[772] *See supra* para. 37.

[773] *See supra* paras. 49–50.

[774] *See supra* para. 62.

[775] *See supra* para. 81.

[776] *See supra* para. 92.

[777] *See supra* para. 141.

[778] *See supra* para. 159.

[779] *See supra* paras. 128, 148.

Small entities will be able to compete with established LECs more quickly and with less initial investment. Their services will have an opportunity to become equally valuable and equally marketable to consumers. We have declined to support alternatives that would have allowed LECs to degrade or limit access to these services, because such behavior would bar competitive entry into the telecommunications services market.

391. *Network Disclosure.* Pursuant to section 251(c)(5) incumbent LECs are required to provide ''reasonable public notice'' of changes in their network which would affect a competing service provider's performance or ability to provide service or otherwise affect carriers' interoperability. The types of changes that incumbent LECs must disclose include, but are not limited to, changes that affect transmission, signalling standards, call routing, network configuration, electronic interfaces or data elements.

392. *Summary of Projected Reporting, Recordkeeping, and Other Compliance Requirements.* To implement this disclosure requirement, this *Order* imposes a new filing requirement on incumbent LECs that plan to make changes to their networks. An incumbent LEC has a choice of filing certain information with the Commission or of filing a short certification with the Commission that the equivalent information has been disclosed elsewhere. In either case, the incumbent LEC is also responsible for maintaining the accuracy of the information. Compliance with this requirement may require the use of engineering, technical, computer, and legal skills.

393. *Steps Taken to Minimize Significant Economic Impact on Small Entities and Small Incumbent LECs, and Alternatives Considered.* This recordkeeping submission requirement should, in fact, ease the burden on smaller entities in their endeavor to remain abreast of changes to the incumbent LEC network with which they interconnect. In our *Order,* we authorize the use of industry forums, industry publications, and the Internet, to make public disclosure of network changes and required technical information by incumbent LECs. We believe that ''this approach would build on a voluntary practice that now exists in the industry and would result in broad availability of the information.'' [780] By making information broadly available, we hope to facilitate the participation of entities, such as small businesses, that lack the resources to participate in industry forums. We originally postulated that public notice should be provided exclusively through industry fora or industry publications.[781] Upon further consideration, however, we broadened the means by which an incumbent LEC could satisfy our public notice requirement to include two alternative low-cost mechanisms—use of the Internet or filing with the Commission.[782] These additional options will be beneficial to small incumbent LECs because they will allow those small LECs to meet their network disclosure obligations without incurring the costs associated with attending industry conferences or publishing the information in an industry magazine or journal.

394. *Numbering Administration.* Section 251(e) confers upon the Commission exclusive authority over all matters relating to the administration of numbering resources that pertain to the United States. To implement section 251(e)(1) the Commission plans to designate a North American Numbering Plan (NANP) Administrator that will administer telecommunications numbering in the United States equitably and impartially. Pursuant to 251(e)(2) the cost of establishing and maintaining the NANP Administrator will be borne by all telecommunications carriers on a competitively neutral basis.

395. *Summary of Projected Reporting, Recordkeeping, and Other Compliance Requirements.* The Commission has authorized state public utility commissions to perform the task of implementing new area codes subject to Commission guidelines. If a state commission chooses to initiate and plan area code relief, it must inform the NANP Administrator of the functions the commission will perform. All telecommunications carriers will be required to contribute to the costs of establishing numbering administration. Compliance with this requirement will require engineering, technical, operational, and accounting skills.

396. *Steps Taken to Minimize Significant Economic Impact on Small Entities and Small Incumbent LECs, and Alternatives Considered.* Although the Commission has authorized states to implement new area codes, it has stipulated that states may not implement them in a manner that will unduly favor or disadvantage any particular industry segment or group of consumers.[783] Accordingly, the Commission has prohibited service-specific or technology specific area code overlays, because they would exclude certain services or carriers, that may be small business entities, from the existing area code and would segregate their operations in a new area code.[784] If states choose to implement all-service overlays, the Commission has required that there be 10-digit dialing for all local calls in areas served by such overlays to ensure that competition will not be deterred as a result of dialing disparity.[785] Without mandatory 10-digit dialing, customers might find it less attractive to switch carriers because competing LECs, many of which may be new entrants to the market and may include small businesses, would have to assign their customers numbers in the new overlay area code. This would require those customers to dial 10 digits much more often than the incumbents' customers. Requiring 10-digit dialing for all local calls avoids the potentially anti-competitive effect of all-service area code overlays. In addition, to advance competition, the Commission has required that where an area code overlay is implemented, every entity authorized to provide local exchange service in the old area code, which may include small businesses, must be assigned at least one NXX in that area code.

397. Under the 1996 Act each telecommunications carrier must contribute to cover the cost of numbering administration. Many alternatives for allocating these costs were considered to ensure that each carrier would contribute to a fund to cover the cost of numbering administration on a competitively neutral basis. The contributions will be based on the carrier's gross revenues from its provision of telecommunications services reduced by all payments for telecommunications services or facilities that are paid to other telecommunications carriers. Such a competitively neutral cost allocation plan benefits small incumbent LECs that might have been unduly burdened by a cost apportionment plan requiring an equal payment from each entity.[786]

E. Report to Congress

398. The Commission shall send a copy of this Final Regulatory Flexibility Analysis, along with this *Order,* in a report to Congress pursuant to the Small Business Regulatory Enforcement Fairness Act of 1996, 5 U.S.C. 801(a)(1)(A). A copy of this FRFA will

[780] *NPRM* at para. 191.

[781] *See supra* para. 192.

[782] *See supra* para. 198.

[783] *See supra* para. 281.

[784] *See supra* para. 285.

[785] *See supra* para. 286.

[786] *See supra* para. 343.

also be published in the Federal Register.

VII. Ordering Clauses

Pursuant to sections 1–4, 201–209, 214, 218, 224, 251, 252, 303(r) and 332 of the Communications Act of 1934, as amended, and Section 601 of the Telecommunications Act of 1996, 47 U.S.C. 151–154, 201–209, 214, 218, 224, 251, 252, 303(r), and 332, parts 51 and 52 of the Commission's rules, 47 CFR parts 51, 52 are amended as set forth below.

400. It is further ordered that the policies, rules, and requirements set forth herein are adopted as set forth below.

401. It is further ordered, pursuant to sections 416(a) and 413 of the Communications Act of 1934, as amended, 47 U.S.C. 416(a) and 413, that the Secretary shall serve this *Second Report and Order and Memorandum Opinion and Order* on all local exchange carriers, as defined in section 3(26) of the Communications Act of 1934, as amended, 47 U.S.C. 153(26), that have designated in writing an agent in the District of Columbia, upon whom service of all notices and process and all orders, decisions, and requirements of the Commission may be made for and on behalf of the local exchange carrier, as required by section 413 of the Communications Act of 1934, as amended, 47 U.S.C. 413.

402. It is further ordered that, pursuant to the authority contained in section 408 of the Communications Act, as amended, 47 U.S.C. 408, all authorizations for state commissions, Bellcore, and local administrators, including LECs, to perform certain numbering administration functions, consistent with the terms as defined in this *Order*, are effective August 8, 1996. Because of the need to avoid disruption in numbering administration, we find that there is good cause for this action pursuant to 5 U.S.C. 553(d)(3). All other policies, rules, and requirements set forth herein are effective October 7, 1996, except for collections of information subject to approval by the Office of Management and Budget (''OMB''), which are effective November 15, 1996.

403. It is further ordered that, pursuant to sections 4, 5, and 405 of the Communications Act of 1934, as amended, 47 U.S.C. 154, 155, and 405, *In the Matter of Proposed 708 Relief Plan and 630 Numbering Plan Area Code by Ameritech—Illinois*, IAD File no. 94–102, Declaratory Ruling and Order, 10 FCC Rcd. 4596 (1995) IS CLARIFIED to the extent indicated herein at paragraph numbers 281–293.

404. It is further ordered that, pursuant to the authority contained in sections 4(i), 251(e)(1), and 405 of the Communications Act of 1934, as amended, 47 U.S.C. 154(i), 251(e)(1) and 405, Comcast Corporation's Petition for Clarification or Reconsideration of *In the Matter of Proposed 708 Relief Plan and 630 Numbering Plan Area Code by Ameritech—Illinois*, IAD File no. 94–102, Declaratory Ruling and Order, 10 FCC Rcd. 4596 (1995), IS DISMISSED as moot.

405. It is further ordered that, pursuant to the authority contained in sections 4(i), 251(e)(1), and 405 of the Communications Act, as amended, 47 U.S.C. 154(i), 251(e)(1), and 405, the Petition for Limited Clarification and/or Reconsideration filed by the Pennsylvania Public Utilities Commission and the Request for Clarification filed by the National Association of Regulatory Utility Commissioners of *In the Matter of Administration of the North American Numbering Plan*, CC Docket No. 92–237, Report and Order, 11 FCC Rcd 2588 (1995) are hereby dismissed.

406. It is further ordered that the relief requested in the petition for declaratory ruling filed by the Texas Public Utilities Commission is denied.

407. It is further ordered that, pursuant to section 5(c)(1) of the Communications Act of 1934, as amended, 47 U.S.C. 155(c)(1), authority is delegated to the Chief, Common Carrier Bureau, to act on petitions filed by parties wishing to dispute proposed area code plans, to act on toll dialing parity implementation plans filed by LECs seeking to implement toll dialing parity, and to issue orders fixing reasonable public notice periods in the case of contested short term disclosure by incumbent local exchange carriers of network changes under 251(c)(5).

408. It is further ordered that, to the extent that issues from CC Docket No. 95–185, *In the Matter of Interconnection Between Local Exchange Carriers and Commercial Mobile Service Providers*, are resolved here, we incorporate the relevant portions of the record in that docket pertaining to paging carriers being charged fees for the opening of central office codes and for blocks of numbers.

List of Subjects

47 CFR Part 51

Collocation, Interconnection, Network elements, Pricing standard, Proxies, Reciprocal compensation, Resale, Transport and termination.

47 CFR Part 52

Area codes, Cost recovery, Database architecture and administration, Local exchange carrier, Local number portability, Long-term database methods, Numbering, Telecommunications, Transitional methods.

Federal Communications Commission.

William F. Caton,

Acting Secretary.

Note: This attachment will not be published in the Code of Federal Regulations.

Attachment—List of Parties

Comments: (Filed on or Before May 20, 1996)

American Communications Services, Inc. (ACSI)
Ameritech
Association for Local Telecommunications Services (ALTS)
AT&T Corporation (AT&T)
Beehive Telephone Company, Inc. (Beehive)
Bell Atlantic Telephone Companies (Bell Atlantic)
BellSouth Corporation (BellSouth)
Cellular Telecommunications Industry Association (CTIA)
Cincinnati Bell Telephone Company (CBT)
Citizens Utilities Company (Citizens Utilities)
Cox Communications, Inc. (Cox)
District of Columbia Public Service Commission (District of Columbia Commission)
Excel Telecommunications (Excel)
Florida Public Service Commission (Florida Commission)
Frontier Corporation (Frontier)
General Communication, Inc. (GCI)
General Services Administration/Department of Defense (GSA/DOD)
GTE Service Corporation (GTE)
GVNW Inc./Management (GVNW)
Illinois Commerce Commission (Illinois Commission)
Indiana Utility Regulatory Commission (Indiana Commission Staff)
Lincoln Telephone and Telegraph Company (Lincoln Telephone)
Louisiana Public Service Commission (LPSC)
MCI Telecommunications Corporation (MCI)
MFS Communications Company, Inc. (MFS)
Michigan Public Service Commission (Michigan Commission Staff)
National Cable Television Association, Inc. (NCTA)
New Jersey, Staff of Board of Public Utilities (New Jersey Commission)
NEXTLINK Communications, L.L.C. (NEXTLINK)
Northern Telecom inc. (Nortel)
NYNEX Telephone Companies (NYNEX)
Office of the Ohio Consumers' Counsel (Ohio Consumers' Counsel)
Omnipoint Communications, Inc. (Omnipoint)
Pacific Telesis Group (PacTel)
Paging Network, Inc. (PageNet)
Pennsylvania Public Utility Commission (Pennsylvania Commission)
People of the State of California and the Public Utility Commission of the State of California (California Commission)

Public Utilities Commission of Ohio (Ohio Commission)
Rural Telephone Coalition (Rural Tel. Coalition)
SBC Communications Inc. (SBC)
Small Cable Business Association (SCBA)
Sprint Corporation (Sprint)
Telecommunications Resellers Association
Telecommunications Carriers for Competition (TCC)
Teleport Communications Group Inc. (Teleport)
Texas Public Utilities Commission (Texas Commission)
The Western Alliance (Western Alliance)
Time Warner Communications Holdings, Inc. (Time Warner)
U S WEST, Inc. (U S WEST)
United States Telephone Association (USTA)
Vanguard Cellular Systems, Inc. (Vanguard)
WinStar Communications, Inc. (WinStar)

Replies: (Filed on or Before June 3, 1996)

A-Plus Network, Inc. (A-Plus)
ACSI
American Electric Power Service Corp.
Ameritech
AT&T
Bell Atlantic
Bell Atlantic/NYNEX Mobile
BellSouth
California Commission
Carolina Power and Light Co.
CBT
Citizens Utilities
Consolidated Edison Company of New York (Con Ed)
Cox
Delmarva Power and Light (Delmarva)
District of Columbia Commission
General Communication, Inc. (GCI)
GSA/DOD
GTE Service Corporation (GTE)
Iowa Network Services, Inc., SDN Inc., and KIN Network, Inc. (Iowa Network Services)
Joint Cable Companies
Koch
MCI
MFS
Minnesota Independant Equal Access Corporation (MIEAC)
Motorola, Inc.
Municipal Utilities
National Exchange Carriers Association (NECA)
NCTA
New England Electric Companies
New Mexico Public Service Corporation
NEXTLINK
NYNEX
Ohio Consumers' Counsel
Ohio Edison Company
PacTel
PageNet
Puerto Rico Telephone Company
Rural Tel. Coalition
SBC
Sprint
TCC
Telecommunications Resellers Association
Teleport
U S WEST
USTA
Vanguard
Western Alliance
WinStar

Parties Filing Comments in the Texas PUC Matter

Comments

AT&T
BellSouth
Century Cellunet, Inc. (Century Cellunet)
Competitive Telecommunications Association (CompTel)
Cox
GTE
Houston Cellular Telephone Company (HCTC)
Intelcom Group (U.S.A.), Inc. (Intelcom)
MCI
MFS
Nextel Communications, Inc. (Nextel)
PageNet
Personal Communications Industry Association (PCIA)
ProNet, Inc. (ProNet)
SBC
Sprint Spectrum
Sprint
Teleport
US West
Vanguard

Reply Comments

BellSouth
CTIA
MCI
Omnipoint Communications, Inc. (Omnipoint)
ProNet
SBC
Sprint
Teleport
Texas Commission
Texas Office of Public Utility Counsel (Texas Public Utility Counsel)
U S WEST
Vanguard

Parties Filing Comments in CC Docket No. 95–185

Arch Communications Group, Inc.
AirTouch Communications
PageNet

Rule Changes

Parts 51 and 52 of Title 47 of the Code of Federal Regulations are amended as follows:

PART 51—INTERCONNECTION

1. The authority citation for part 51 is revised to read as follows:

Authority: Sections 1–5, 7, 201–05, 207–09, 218, 225–27, 251–54, 271, 332, 48 Stat. 1070, as amended, 1077; 47 U.S.C. §§ 151–55, 157, 201–05, 207–09, 218, 225–27, 251–54, 271, 332, unless otherwise noted.

2. Section 51.5 is amended by adding the following definitions in alphabetical order to read as follows:

§ 51.5 Terms and definitions.

* * * * *

Dialing Parity. The term ''dialing parity'' means that a person that is not an affiliate of a local exchange carrier is able to provide telecommunications services in such a manner that customers have the ability to route automatically, without the use of any access code, their telecommunications to the telecommunications service provider of the customer's designation from among 2 or more telecommunications service providers (including such local exchange carrier).

* * * * *

Information services. The term ''information services'' means the offering of a capability for generating, acquiring, storing, transforming, processing, retrieving, utilizing, or making available information via telecommunications, and includes electronic publishing, but does not include any use of any such capability for the management, control, or operation of a telecommunications system or the management of a telecommunications service.

* * * * *

Local Access and Transport Area (LATA). A ''Local Access and Transport Area'' is a contiguous geographic area—

(1) Established before February 8, 1996 by a Bell operating company such that no exchange area includes points within more than 1 metropolitan statistical area, consolidated metropolitan statistical area, or State, except as expressly permitted under the AT&T Consent Decree; or

(2) Established or modified by a Bell operating company after February 8, 1996 and approved by the Commission.

* * * * *

Service provider. A ''service provider'' is a provider of telecommunications services or a provider of information services.

* * * * *

State. The term ''state'' includes the District of Columbia and the Territories and possessions.

* * * * *

Telecommunications service. The term ''telecommunications service'' refers to the offering of telecommunications for a fee directly to the public, or to such classes of users as to be effectively available directly to the public, regardless of the facilities used.

Telephone exchange service. A ''telephone exchange service'' is:

(1) A service within a telephone exchange, or within a connected system of telephone exchanges within the same exchange area operated to furnish to subscribers intercommunicating service of the character ordinarily furnished by a single exchange, and which is covered by the exchange service charge, or

(2) A comparable service provided through a system of switches, transmission equipment, or other facilities (or combination thereof) by

which a subscriber can originate and terminate a telecommunications service.

Telephone toll service. The term ''telephone toll service'' refers to telephone service between stations in different exchange areas for which there is made a separate charge not included in contracts with subscribers for exchange service.

Unreasonable dialing delay. For the same type of calls, dialing delay is ''unreasonable'' when the dialing delay experienced by the customer of a competing provider is greater than that experienced by a customer of the LEC providing dialing parity, or nondiscriminatory access to operator services or directory assistance.

* * * * *

3. A new § 51.205 is added to subpart C to read as follows:

§ 51.205 Dialing parity: general.

A local exchange carrier (LEC) shall provide local and toll dialing parity to competing providers of telephone exchange service or telephone toll service, with no unreasonable dialing delays. Dialing parity shall be provided for all originating telecommunications services that require dialing to route a call.

4. A new § 51.207 is added to subpart C to read as follows:

§ 51.207 Local dialing parity.

A LEC shall permit telephone exchange service customers within a local calling area to dial the same number of digits to make a local telephone call notwithstanding the identity of the customer's or the called party's telecommunications service provider.

5. A new § 51.209 is added to subpart C read as follows:

§ 51.209 Toll dialing parity.

(a) A LEC shall implement throughout each state in which it offers telephone exchange service intraLATA and interLATA toll dialing parity based on LATA boundaries. When a single LATA covers more than one state, the LEC shall use the implementation procedures that each state has approved for the LEC within that state's borders.

(b) A LEC shall implement toll dialing parity through a presubscription process that permits a customer to select a carrier to which all designated calls on a customer's line will be routed automatically. LECs shall allow a customer to presubscribe, at a minimum, to one telecommunications carrier for all interLATA toll calls and to presubscribe to the same or to another telecommunications carrier for all intraLATA toll calls.

(c) A LEC may not assign automatically a customer's intraLATA toll traffic to itself, to its subsidiaries or affiliates, to the customer's presubscribed interLATA or interstate toll carrier, or to any other carrier, except when, in a state that already has implemented intrastate, intraLATA toll dialing parity, the subscriber has selected the same presubscribed carrier for both intraLATA and interLATA toll calls.

(d) Notwithstanding the requirements of paragraphs (a) and (b) of this section, states may require that toll dialing parity be based on state boundaries if it deems that the provision of intrastate and interstate toll dialing parity is procompetitive and otherwise in the public interest.

6. A new § 51.211 is added to subpart C to read as follows:

§ 51.211 Toll dialing parity implementation schedule.

(a) A LEC that does not begin providing in-region, interLATA or in-region, interstate toll services in a state before February 8, 1999, must implement intraLATA and interLATA toll dialing parity throughout that state on February 8, 1999 or an earlier date as the state may determine, consistent with section 271(e)(2)(B) of the Communications Act of 1934, as amended, to be in the public interest.

(b) A Bell Operating Company (BOC) that provides in-region, interLATA toll services in a state before February 8, 1999 shall provide intraLATA toll dialing parity throughout that state coincident with its provision of in-region, interLATA toll services.

(c) A LEC that is not a BOC that begins providing in-region, interLATA or in-region, interstate toll services in a state before August 8, 1997, shall implement intraLATA and interLATA toll dialing parity throughout that state by August 8, 1997. If the LEC is unable to comply with the August 8, 1997 implementation deadline, the LEC must notify the Commission's Common Carrier Bureau by May 8, 1997. In the notification, the LEC must state its justification for noncompliance and must set forth the date by which it proposes to implement intraLATA and interLATA toll dialing parity.

(d) A LEC that is not a BOC that begins providing in-region, interLATA or in-region, interstate toll services in a state on or after August 8, 1997, but before February 8, 1999 shall implement intraLATA and interLATA toll dialing parity throughout that state no later than the date on which it begins providing in-region, interLATA or in-region, interstate toll services.

(e) Notwithstanding the requirements of paragraphs (a) through (d) of this section, a LEC shall implement toll dialing parity under a state order as described below:

(1) If the state issued a dialing parity order by December 19, 1995 requiring a BOC to implement toll dialing parity in advance of the dates established by these rules, the BOC must implement toll dialing parity in accordance with the implementation dates established by the state order.

(2) If the state issued a dialing parity order by August 8, 1996 requiring a LEC that is not a BOC to implement toll dialing parity in advance of the dates established by these rules, the LEC must implement toll dialing parity in accordance with the implementation dates established by the state order.

(f) For LECs that are not Bell Operating Companies, the term *in-region, interLATA toll service*, as used in this section and § 51.213, includes the provision of toll services outside of the LEC's study area.

7. A new § 51.213 is added to subpart C to read as follows:

§ 51.213 Toll dialing parity implementation plans.

(a) A LEC must file a plan for providing intraLATA toll dialing parity throughout each state in which it offers telephone exchange service. A LEC cannot offer intraLATA toll dialing parity within a state until the implementation plan has been approved by the appropriate state commission or the Commission.

(b) A LEC's implementation plan must include:

(1) A proposal that explains how the LEC will offer intraLATA toll dialing parity for each exchange that the LEC operates in the state, in accordance with the provisions of this section, and a proposed time schedule for implementation; and

(2) A proposal for timely notification of its subscribers and the methods it proposes to use to enable subscribers to affirmatively select an intraLATA toll service provider.

(3) A LEC that is not a BOC also shall identify the LATA with which it will associate for the purposes of providing intraLATA and interLATA toll dialing parity under this subpart.

(c) A LEC must file its implementation plan with the state commission for each state in which the LEC provides telephone exchange service, except that if a LEC determines that a state commission has elected not to review the plan or will not complete its review in sufficient time for the LEC to meet the toll dialing parity

implementation deadlines in § 51.211, the LEC must file its plan with the Commission:

(1) No later than 180 days before the date on which the LEC will begin providing toll dialing parity in the state, or no later than 180 days before February 8, 1999, whichever occurs first; or

(2) For LECs that begin providing in-region, interLATA or in-region, interstate toll service (*see* § 51.211(f)) before August 8, 1997, no later than December 5, 1996.

(d) The Commission will release a public notice of any LEC implementation plan that is filed with the Commission under paragraph (c) of this section.

(1) The LEC's plan will be deemed approved on the fifteenth day following release of the Commission's public notice unless, no later than the fourteenth day following the release of the Commission's public notice; either

(i) The Common Carrier Bureau notifies the LEC that its plan will not be deemed approved on the fifteenth day; or

(ii) An opposition to the plan is filed with the Commission and served on the LEC that filed the plan. Such an opposition must state specific reasons why the LEC's plan does not serve the public interest.

(2) If one or more oppositions are filed, the LEC that filed the plan will have seven additional days (*i.e.*, until no later than the twenty-first day following the release of the Commission's public notice) within which to file a reply to the opposition(s) and serve it on all parties that filed an opposition. The response shall:

(i) Include information responsive to the allegations and concerns identified by the opposing party; and

(ii) Identify possible revisions to the plan that will address the opposing party's concerns.

(3) If a LEC's plan is opposed under paragraph (d)(1)(ii) of this section, the Common Carrier Bureau will act on the plan within ninety days of the date on which the Commission released its public notice. In the event the Bureau fails to act within ninety days, the plan will not go into effect pending Bureau action. If the plan is not opposed, but it did not go into effect on the fifteenth day following the release of the Commission's public notice (*see* paragraph (d)(1)(i) of this section), and the Common Carrier Bureau fails to act on the plan within ninety days of the date on which the Commission released its public notice, the plan will be deemed approved without further Commission action on the ninety-first day after the date on which the Commission released its public notice of the plan's filing.

8. A new § 51.215 is added to subpart C to read as follows:

§ 51.215 Dialing parity: cost recovery.

(a) A LEC may recover the incremental costs necessary for the implementation of toll dialing parity. The LEC must recover such costs from all providers of telephone exchange service and telephone toll service in the area served by the LEC, including that LEC. The LEC shall use a cost recovery mechanism established by the state.

(b) Any cost recovery mechanism for the provision of toll dialing parity pursuant to this section that a state adopts must not:

(1) Give one service provider an appreciable cost advantage over another service provider, when competing for a specific subscriber (*i.e.*, the recovery mechanism may not have a disparate effect on the incremental costs of competing service providers seeking to serve the same customer); or

(2) Have a disparate effect on the ability of competing service providers to earn a normal return on their investment.

9. A new § 51.217 is added to subpart C to read as follows:

§ 51.217 Nondiscriminatory access: Telephone numbers, operator services, directory assistance services, and directory listings.

(a) *Definitions.* As used in this section, the following definitions apply:

(1) *Competing provider.* A ''competing provider'' is a provider of telephone exchange or telephone toll services that seeks nondiscriminatory access from a local exchange carrier (LEC) in that LEC's service area.

(2) *Nondiscriminatory access.* ''Nondiscriminatory access'' refers to access to telephone numbers, operator services, directory assistance and directory listings that is at least equal to the access that the providing local exchange carrier (LEC) itself receives. Nondiscriminatory access includes, but is not limited to:

(i) Nondiscrimination between and among carriers in the rates, terms, and conditions of the access provided; and

(ii) The ability of the competing provider to obtain access that is at least equal in quality to that of the providing LEC.

(3) *Providing local exchange carrier* (LEC). A ''providing local exchange carrier'' is a local exchange carrier (LEC) that is required to permit nondiscriminatory access to a competing provider.

(b) *General rule.* A local exchange carrier (LEC) that provides operator services, directory assistance services or directory listings to its customers, or provides telephone numbers, shall permit competing providers of telephone exchange service or telephone toll service to have nondiscriminatory access to that service or feature, with no unreasonable dialing delays.

(c) *Specific requirements.* A LEC subject to paragraph (b) of this section must also comply with the following requirements:

(1) *Telephone numbers.* A LEC shall permit competing providers to have access to telephone numbers that is identical to the access that the LEC provides to itself.

(2) *Operator services.* A LEC must permit telephone service customers to connect to the operator services offered by that customer's chosen local service provider by dialing ''0,'' or ''0'' plus the desired telephone number, regardless of the identity of the customer's local telephone service provider.

(3) *Directory assistance services and directory listings.*—(i) *Access to directory assistance.* A LEC shall permit competing providers to have access to its directory assistance services so that any customer of a competing provider can obtain directory listings, except as provided in paragraph (c)(3)(iii) of this section, on a nondiscriminatory basis, notwithstanding the identity of the customer's local service provider, or the identity of the provider for the customer whose listing is requested.

(ii) *Access to directory listings.* A LEC shall provide directory listings to competing providers in readily accessible magnetic tape or electronic formats in a timely fashion upon request. A LEC also must permit competing providers to have access to and read the information in the LEC's directory assistance databases.

(iii) *Unlisted numbers.* A LEC shall not provide access to unlisted telephone numbers, or other information that its customer has asked the LEC not to make available. The LEC shall ensure that access is permitted only to the same directory information that is available to its own directory assistance customers.

(iv) *Adjuncts to services.* Operator services and directory assistance services must be made available to competing providers in their entirety, including access to any adjunct features (*e.g.*, rating tables or customer information databases) necessary to allow competing providers full use of these services.

(d) *Branding of operator services and directory assistance services.* The refusal of a providing local exchange

carrier (LEC) to comply with the reasonable request of a competing provider that the providing LEC rebrand its operator services and directory assistance, or remove its brand from such services, creates a presumption that the providing LEC is unlawfully restricting access to its operator services and directory assistance. The providing LEC can rebut this presumption by demonstrating that it lacks the capability to comply with the competing provider's request.

(e) *Disputes.*—(1) *Disputes involving nondiscriminatory access.* In disputes involving nondiscriminatory access to operator services, directory assistance services, or directory listings, a providing LEC shall bear the burden of demonstrating with specificity:

(i) That it is permitting nondiscriminatory access, and

(ii) That any disparity in access is not caused by factors within its control. ''Factors within its control'' include, but are not limited to, physical facilities, staffing, the ordering of supplies or equipment, and maintenance.

(2) *Disputes involving unreasonable dialing delay.* In disputes between providing local exchange carriers (LECs) and competing providers involving unreasonable dialing delay in the provision of access to operator services and directory assistance, the burden of proof is on the providing LEC to demonstrate with specificity that it is processing the calls of the competing provider's customers on terms equal to that of similar calls from the providing LEC's own customers.

10. Section 51.305 is amended by adding a new paragraph (g) to read as follows:

§ 51.305 Interconnection.

* * * * *

(g) An incumbent LEC shall provide to a requesting telecommunications carrier technical information about the incumbent LEC's network facilities sufficient to allow the requesting carrier to achieve interconnection consistent with the requirements of this section.

11. Section 51.307 is amended by adding a new paragraph (e) to read as follows:

§ 51.307 Duty to provide access on an unbundled basis to network elements.

* * * * *

(e) An incumbent LEC shall provide to a requesting telecommunications carrier technical information about the incumbent LEC's network facilities sufficient to allow the requesting carrier to achieve access to unbundled network elements consistent with the requirements of this section.

12. A new § 51.325 is added to subpart D to read as follows:

§ 51.325 Notice of network changes: Public notice requirement.

(a) An incumbent local exchange carrier (''LEC'') must provide public notice regarding any network change that:

(1) Will affect a competing service provider's performance or ability to provide service; or

(2) Will affect the incumbent LEC's interoperability with other service providers.

(b) For purposes of this section, *interoperability* means the ability of two or more facilities, or networks, to be connected, to exchange information, and to use the information that has been exchanged.

(c) Until public notice has been given in accordance with §§ 51.325 through 51.335, an incumbent LEC may not disclose to separate affiliates, separated affiliates, or unaffiliated entities (including actual or potential competing service providers or competitors), information about planned network changes that are subject to this section.

(d) For the purposes of §§ 51.325 through 51.335, the term *services* means telecommunications services or information services.

13. A new § 51.327 is added to subpart D to read as follows:

§ 51.327 Notice of network changes: content of notice.

(a) Public notice of planned network changes must, at a minimum, include:

(1) The carrier's name and address;

(2) The name and telephone number of a contact person who can supply additional information regarding the planned changes;

(3) The implementation date of the planned changes;

(4) The location(s) at which the changes will occur;

(5) A description of the type of changes planned (Information provided to satisfy this requirement must include, as applicable, but is not limited to, references to technical specifications, protocols, and standards regarding transmission, signaling, routing, and facility assignment as well as references to technical standards that would be applicable to any new technologies or equipment, or that may otherwise affect interconnection); and

(6) A description of the reasonably foreseeable impact of the planned changes.

(b) The incumbent LEC also shall follow, as necessary, procedures relating to confidential or proprietary information contained in § 51.335.

14. A new § 51.329 is added to subpart D read as follows:

§ 51.329 Notice of network changes: Methods for providing notice.

(a) In providing the required notice to the public of network changes, an incumbent LEC may use one of the following methods:

(1) Filing a public notice with the Commission; or

(2) Providing public notice through industry fora, industry publications, or the carrier's publicly accessible Internet site. If an incumbent LEC uses any of the methods specified in paragraph (a)(2) of this section, it also must file a certification with the Commission that includes:

(i) A statement that identifies the proposed changes;

(ii) A statement that public notice has been given in compliance with §§ 51.325 through 51.335; and

(iii) A statement identifying the location of the change information and describing how this information can be obtained.

(b) Until the planned change is implemented, an incumbent LEC must keep the notice available for public inspection, and amend the notice to keep the information complete, accurate and up-to-date.

(c) *Specific filing requirements.* Commission filings under this section must be made as follows:

(1) The public notice or certification must be labeled with one of the following titles, as appropriate: ''Public Notice of Network Change Under Rule 51.329(a),'' ''Certification of Public Notice of Network Change Under Rule 51.329(a),'' ''Short Term Public Notice Under Rule 51.333(a),'' or ''Certification of Short Term Public Notice Under Rule 51.333(a).''

(2) Two paper copies of the incumbent LEC's public notice or certification, required under paragraph (a) of this section, must be sent to ''Secretary, Federal Communications Commission, Washington, DC 20554.'' The date on which this filing is received by the Secretary is considered the official filing date.

(3) In addition, one paper copy and one diskette copy must be sent to the ''Chief, Network Services Division, Common Carrier Bureau, Federal Communications Commission, Washington, DC 20554.'' The diskette copy must be on a standard 3½ inch diskette, formatted in IBM-compatible format to be readable by high-density floppy drives operating under MS DOS 5.X or later compatible versions, and shall be in a word-processing format designated, from time-to-time, in public

notices released by the Network Services Division. The diskette must be submitted in ''read only'' mode, and must be clearly labeled with the carrier's name, the filing date, and an identification of the diskette's contents.

15. A new § 51.331 is added to subpart D read as follows:

§ 51.331 Notice of network changes: timing of notice.

(a) An incumbent LEC shall give public notice of planned changes at the make/buy point, as defined in paragraph (b) of this section, but at least 12 months before implementation, except as provided below:

(1) If the changes can be implemented within twelve months of the make/buy point, public notice must be given at the make/buy point, but at least six months before implementation.

(2) If the changes can be implemented within six months of the make/buy point, public notice may be given pursuant to the short term notice procedures provided in § 51.333.

(b) For purposes of this section, the *make/buy point* is the time at which an incumbent LEC decides to make for itself, or to procure from another entity, any product the design of which affects or relies on a new or changed network interface. If an incumbent LEC's planned changes do not require it to make or to procure a product, then the make/buy point is the point at which the incumbent LEC makes a definite decision to implement a network change.

(1) For purposes of this section, a *product* is any hardware or software for use in an incumbent LEC's network or in conjunction with its facilities that, when installed, could affect the compatibility of an interconnected service provider's network, facilities or services with an incumbent LEC's existing telephone network, facilities or services, or with any of an incumbent carrier's services or capabilities.

(2) For purposes of this section a *definite decision* is reached when an incumbent LEC determines that the change is warranted, establishes a timetable for anticipated implementation, and takes any action toward implementation of the change within its network.

16. A new § 51.333 is added to subpart D to read as follows:

§ 51.333 Notice of network changes: short term notice.

(a) *Certificate of service.* If an incumbent LEC wishes to provide less than six months notice of planned network changes, the public notice or certification that it files with the Commission must include a certificate of service in addition to the information required by § 51.327(a) or § 51.329(a)(2), as applicable. The certificate of service shall include:

(1) A statement that, at least five business days in advance of its filing with the Commission, the incumbent LEC served a copy of its public notice upon each telephone exchange service provider that directly interconnects with the incumbent LEC's network; and

(2) The name and address of each such telephone exchange service provider upon which the notice was served.

(b) *Implementation date.* The Commission will release a public notice of such short term notice filings. Short term notices shall be deemed final on the tenth business day after the release of the Commission's public notice, unless an objection is filed, pursuant to paragraph (c) of this section.

(c) *Objection procedures.* An objection to an incumbent LEC's short term notice may be filed by an information service provider or telecommunication service provider that directly interconnects with the incumbent LEC's network. Such objections must be filed with the Commission, and served on the incumbent LEC, no later than the ninth business day following the release of the Commission's public notice. All objections to an incumbent LEC's short term notice must:

(1) State specific reasons why the objector cannot accommodate the incumbent LEC's changes by the date stated in the incumbent LEC's public notice and must indicate any specific technical information or other assistance required that would enable the objector to accommodate those changes;

(2) List steps the objector is taking to accommodate the incumbent LEC's changes on an expedited basis;

(3) State the earliest possible date (not to exceed six months from the date the incumbent LEC gave its original public notice under this section) by which the objector anticipates that it can accommodate the incumbent LEC's changes, assuming it receives the technical information or other assistance requested under paragraph (c)(1) of this section;

(4) Provide any other information relevant to the objection; and

(5) Provide the following affidavit, executed by the objector's president, chief executive officer, or other corporate officer or official, who has appropriate authority to bind the corporation, and knowledge of the details of the objector's inability to adjust its network on a timely basis:

''I, (*name and title*), under oath and subject to penalty for perjury, certify that I have read this objection, that the statements contained in it are true, that there is good ground to support the objection, and that it is not interposed for purposes of delay. I have appropriate authority to make this certification on behalf of (*objector*) and I agree to provide any information the Commission may request to allow the Commission to evaluate the truthfulness and validity of the statements contained in this objection.''

(d) *Response to objections.* If an objection is filed, an incumbent LEC shall have until no later than the fourteenth business day following the release of the Commission's public notice to file with the Commission a response to the objection and to serve the response on all parties that filed objections. An incumbent LEC's response must:

(1) Provide information responsive to the allegations and concerns identified by the objectors;

(2) State whether the implementation date(s) proposed by the objector(s) are acceptable;

(3) Indicate any specific technical assistance that the incumbent LEC is willing to give to the objectors; and

(4) Provide any other relevant information.

(e) *Resolution.* If an objection is filed pursuant to paragraph (c) of this section, then the Chief, Network Services Division, Common Carrier Bureau, will issue an order determining a reasonable public notice period, *provided however,* that if an incumbent LEC does not file a response within the time period allotted, or if the incumbent LEC's response accepts the latest implementation date stated by an objector, then the incumbent LEC's public notice shall be deemed amended to specify the implementation date requested by the objector, without further Commission action. An incumbent LEC must amend its public notice to reflect any change in the applicable implementation date pursuant to § 51.329(b).

17. A new § 51.335 is added to subpart D to read as follows:

§ 51.335 Notice of network changes: confidential or proprietary information.

(a) If an incumbent LEC claims that information otherwise required to be disclosed is confidential or proprietary, the incumbent LEC's public notice must include, in addition to the information identified in § 51.327(a), a statement that the incumbent LEC will make further information available to those signing a nondisclosure agreement.

(b) *Tolling the public notice period.* Upon receipt by an incumbent LEC of a competing service provider's request for disclosure of confidential or proprietary information, the applicable public notice period will be tolled until the parties agree on the terms of a nondisclosure agreement. An incumbent LEC receiving such a request must amend its public notice as follows:

(1) On the date it receives a request from a competing service provider for disclosure of confidential or proprietary information, to state that the notice period is tolled; and

(2) On the date the nondisclosure agreement is finalized, to specify a new implementation date.

PART 52—NUMBERING

18. The authority citation for part 52 is revised to read as follows:

Authority: Sec. 1, 2, 4, 5, 48 Stat. 1066, as amended; 47 U.S.C. § 151, 152, 154, 155 unless otherwise noted. Interpret or apply secs. 3, 4, 201–05, 207–09, 218, 225–7, 251–2, 271 and 332, 48 Stat. 1070, as amended, 1077; 47 U.S.C. 153, 154, 201–05, 207–09, 218, 225–7, 251–2, 271 and 332 unless otherwise noted.

19. Subpart B of part 52 is redesignated as subpart C and amended by redesignating §§ 52.1 through 52.99 as §§ 52.21 through 52.99; and a new subpart A and subpart B are added to part 52 to read as follows:

Subpart A—Scope and Authority

Sec.
52.1 Basis and purpose.
52.3 General.
52.5 Definitions.

Subpart B—Administration

52.7 Definitions.
52.9 General requirements.
52.11 North American Numbering Council.
52.13 North American Numbering Plan Administrator.
52.15 Central office code administration.
52.17 Costs of number administration.
52.19 Area code relief.

Subpart C—Number Portability

52.21 Definitions.
52.23 Deployment of long-term database methods for number portability by LECs.
52.25 Database architecture and administration.
52.27 Deployment of transitional measures for number portability.
52.29 Cost recovery for transitional measures for number portability.
52.31 Deployment of long-term database methods for number portability by CMRS providers.
52.32–52.99 [Reserved]

Subpart A—Scope and Authority

§ 52.1 Basis and purpose.

(a) *Basis.* These rules are issued pursuant to the Communications Act of 1934, as amended, 47 U.S.C. 151 *et. seq.*

(b) *Purpose.* The purpose of these rules is to establish, for the United States, requirements and conditions for the administration and use of telecommunications numbers for provision of telecommunications services.

§ 52.3 General.

The Commission shall have exclusive authority over those portions of the North American Numbering Plan (NANP) that pertain to the United States. The Commission may delegate to the States or other entities any portion of such jurisdiction.

§ 52.5 Definitions.

As used in this part:

(a) *Incumbent local exchange carrier.* With respect to an area, an ''incumbent local exchange carrier'' is a local exchange carrier that:

(1) On February 8, 1996, provided telephone exchange service in such area; and

(2) (i) On February 8, 1996, was deemed to be a member of the exchange carrier association pursuant to § 69.601(b) of this chapter (47 CFR 69.601(b)); or

(ii) Is a person or entity that, on or after February 8, 1996, became a successor or assign of a member described in paragraph (a)(2)(i) of this section.

(b) *North American Numbering Council* (NANC). The ''North American Numbering Council'' is an advisory committee created under the Federal Advisory Committee Act, 5 U.S.C., App (1988), to advise the Commission and to make recommendations, reached through consensus, that foster efficient and impartial number administration.

(c) *North American Numbering Plan* (NANP). The ''North American Numbering Plan'' is the basic numbering scheme for the telecommunications networks located in Anguilla, Antigua, Bahamas, Barbados, Bermuda, British Virgin Islands, Canada, Cayman Islands, Dominica, Dominican Republic, Grenada, Jamaica, Montserrat, St. Kitts & Nevis, St. Lucia, St. Vincent, Turks & Caicos Islands, Trinidad & Tobago, and the United States (including Puerto Rico, the U.S. Virgin Islands, Guam and the Commonwealth of the Northern Mariana Islands).

(d) *State.* The term ''state'' includes the District of Columbia and the Territories and possessions.

(e) *State commission.* The term ''state commission'' means the commission, board, or official (by whatever name designated) which under the laws of any state has regulatory jurisdiction with respect to intrastate operations of carriers.

(f) *Telecommunications.* ''Telecommunications'' means the transmission, between or among points specified by the user, of information of the user's choosing, without change in the form or content of the information as sent and received.

(g) *Telecommunications carrier.* A ''telecommunications carrier'' is any provider of telecommunications services, except that such term does not include aggregators of telecommunications services (as defined in 47 U.S.C. 226(a)(2)).

(h) *Telecommunications service.* The term ''telecommunications service'' refers to the offering of telecommunications for a fee directly to the public, or to such classes of users as to be effectively available directly to the public, regardless of the facilities used.

Subpart B—Administration

§ 52.7 Definitions.

As used in this subpart:

(a) *Area code or numbering plan area* (NPA). The term ''area code or numbering plan area'' refers to the first three digits (NXX) of a ten-digit telephone number in the form NXX–NXX–XXXX, where N represents any one of the numbers 2 through 9 and X represents any one of the numbers 0 through 9.

(b) *Area code relief.* The term ''area code relief'' refers to the process by which central office codes are made available when there are few or no unassigned central office codes remaining in an existing area code and a new area code is introduced.

(c) *Central office (CO) code.* The term ''central office code'' refers to the second three digits (NXX) of a ten-digit telephone number in the form NXX–NXX–XXXX, where N represents any one of the numbers 2 through 9 and X represents any one of the numbers 0 through 9.

(d) *Central office (CO) code administrator.* The term ''central office code administrator'' refers to the entity or entities responsible for managing central office codes in each area code.

(e) *North American Numbering Plan Administrator* (NANPA). The term ''North American Numbering Plan Administrator'' refers to the entity or entities responsible for managing the NANP.

§ 52.9 General requirements.

(a) To ensure that telecommunications numbers are made available on an equitable basis, the administration of telecommunications numbers shall, in addition to the specific requirements set forth in this subpart:

(1) Facilitate entry into the telecommunications marketplace by making telecommunications numbering resources available on an efficient, timely basis to telecommunications carriers;

(2) Not unduly favor or disfavor any particular telecommunications industry segment or group of telecommunications consumers; and

(3) Not unduly favor one telecommunications technology over another.

(b) If the Commission delegates any telecommunications numbering administration functions to any State or other entity pursuant to 47 U.S.C. 251(e)(1), such State or entity shall perform these functions in a manner consistent with this part.

§ 52.11 North American Numbering Council.

The duties of the North American Numbering Council (NANC), may include, but are not limited to:

(a) Advising the Commission on policy matters relating to the administration of the NANP in the United States;

(b) Making recommendations, reached through consensus, that foster efficient and impartial number administration;

(c) Initially resolving disputes, through consensus, pertaining to number administration in the United States;

(d) Recommending to the Commission an appropriate entity to serve as the NANPA;

(e) Recommending to the Commission an appropriate mechanism for recovering the costs of NANP administration in the United States, consistent with § 52.17;

(f) Carrying out the duties described in § 52.25; and

(g) Carrying out this part as directed by the Commission.

§ 52.13 North American Numbering Plan Administrator.

(a) The North American Numbering Plan Administrator (NANPA) shall be an independent and impartial non-government entity.

(b) The duties of the NANPA shall include, but are not limited to:

(1) Ensuring that the interests of all NANP member countries are considered;

(2) Processing number assignment applications associated with, but not limited to: area codes, N11 codes, carrier identification codes (CICs), ''500'' central office codes, ''900''central office codes, ''456'' central office codes, Signalling System 7 network codes, and Automatic Number Identification Integration Integers (ANI II);

(3) Assigning the numbers and codes described in paragraph (b)(2) of this section;

(4) Maintaining and monitoring administrative number databases;

(5) Assuming additional telecommunications number administration activities, as assigned; and

(6) Ensuring that any action taken with respect to number administration is consistent with this part.

§ 52.15 Central office code administration.

(a) Central Office Code Administration shall be performed by the NANPA, or another entity or entities, as designated by the Commission.

(b) Duties of the entity or entities performing central office code administration may include, but are not limited to:

(1) Processing central office code assignment applications and assigning such codes in a manner that is consistent with this part;

(2) Accessing and maintaining central office code assignment databases;

(3) Contributing to the CO Code Use Survey (COCUS), an annual survey that describes the present and projected use of CO codes for each NPA in the NANP;

(4) Monitoring the use of central office codes within each area code and forecasting the date by which all central office codes within that area code will be assigned; and

(5) Planning for and initiating area code relief, consistent with § 52.19.

(c) Any telecommunications carrier performing central office code administration:

(1) Shall not charge fees for the assignment or use of central office codes to other telecommunications carriers, including paging and CMRS providers, unless the telecommunications carrier assigning the central office code charges one uniform fee for all carriers, including itself and its affiliates; and

(2) Shall, consistent with this subpart, apply identical standards and procedures for processing all central office code assignment requests, and for assigning such codes, regardless of the identity of the telecommunications carrier making the request.

§ 52.17 Costs of number administration.

All telecommunications carriers in the United States shall contribute on a competitively neutral basis to meet the costs of establishing numbering administration.

(a) For each telecommunications carrier, such contributions shall be based on the gross revenues from the provision of its telecommunications services.

(b) The contributions in paragraph (a) of this section shall be based on each contributor's gross revenues from its provision of telecommunications services reduced by all payments for telecommunications services and facilities that have been paid to other telecommunications carriers.

§ 52.19 Area code relief.

(a) State commissions may resolve matters involving the introduction of new area codes within their states. Such matters may include, but are not limited to: Directing whether area code relief will take the form of a geographic split, an overlay area code, or a boundary realignment; establishing new area code boundaries; establishing necessary dates for the implementation of area code relief plans; and directing public education and notification efforts regarding area code changes.

(b) State commissions may perform any or all functions related to initiation and development of area code relief plans, so long as they act consistently with the guidelines enumerated in this part, and subject to paragraph (b)(2) of this section. For the purposes of this paragraph, initiation and development of area code relief planning encompasses all functions related to the implementation of new area codes that were performed by central office code administrators prior to February 8, 1996. Such functions may include: declaring that the area code relief planning process should begin; convening and conducting meetings to which the telecommunications industry and the public are invited on area code relief for a particular area code; and developing the details of a proposed area code relief plan or plans.

(1) The entity or entities designated by the Commission to serve as central office code administrator(s) shall initiate and develop area code relief plans for each area code in each state that has not notified such entity or entities, pursuant to paragraph (b)(2) of this section, that the state will handle such functions.

(2) Pursuant to paragraph (b)(1) of this section, a state commission must notify the entity or entities designated by the Commission to serve as central office code administrator(s) for its state that such state commission intends to perform matters related to initiation and development of area code relief

planning efforts in its state. Notification shall be written and shall include a description of the specific functions the state commission intends to perform. Where the NANP Administrator serves as the central office code administrator, such notification must be made within 120 days of the selection of the NANP Administrator.

(c) New area codes may be introduced through the use of:

(1) A geographic area code split, which occurs when the geographic area served by an area code in which there are few or no central office codes left for assignment is split into two or more geographic parts;

(2) An area code boundary realignment, which occurs when the boundary lines between two adjacent area codes are shifted to allow the transfer of some central office codes from an area code for which central office codes remain unassigned to an area code for which few or no central office codes are left for assignment; or

(3) An area code overlay, which occurs when a new area code is introduced to serve the same geographic area as an existing area code, subject to the following conditions:

(i) No area code overlay may be implemented unless all central office codes in the new overlay area code are assigned to those entities requesting assignment on a first-come, first-serve basis, regardless of the identity of, technology used by, or type of service provided by that entity. No group of telecommunications carriers shall be excluded from assignment of central office codes in the existing area code, or be assigned such codes only from the overlay area code, based solely on that group's provision of a specific type of telecommunications service or use of a particular technology;

(ii) No area code overlay may be implemented unless there exists, at the time of implementation, mandatory ten-digit dialing for every telephone call within and between all area codes in the geographic area covered by the overlay area code; and

(iii) No area code overlay may be implemented unless every telecommunications carrier, including CMRS providers, authorized to provide telephone exchange service, exchange access, or paging service in that NPA 90 days before introduction of the new overlay area code, is assigned during that 90 day period at least one central office code in the existing area code.

§ 52.21 [Amended]

20. Newly redesignated section 52.21 is amended by removing paragraph (f) and redesignating paragraphs (g) through (k) as paragraphs (f) through (j); removing (l) and redesignating paragraphs (m) through (r) as paragraphs (k) through (p); and removing paragraphs (s), (t), and (u) and redesignating paragraph (v) as paragraph (q).

[FR Doc. 96–22045 Filed 9–5–96; 8:45 am]

BILLING CODE 6712–01–P

federal register

Friday
September 6, 1996

Part IV

Department of the Treasury

Office of the Comptroller of the Currency

12 CFR Part 3

Federal Reserve System

12 CFR Parts 208 and 225

Federal Deposit Insurance Corporation

12 CFR Part 325

Risk-Based Capital Standards: Market Risk; Joint Final Rule

DEPARTMENT OF THE TREASURY

Office of the Comptroller of the Currency

12 CFR Part 3

[Docket No. 96–18]

RIN 1557–AB14

FEDERAL RESERVE SYSTEM

12 CFR Parts 208 and 225

[Regulations H and Y; Docket No. R–0884]

FEDERAL DEPOSIT INSURANCE CORPORATION

12 CFR Part 325

RIN 3064–AB64

Risk-Based Capital Standards: Market Risk

AGENCIES: Office of the Comptroller of the Currency, Treasury; Board of Governors of the Federal Reserve System; and Federal Deposit Insurance Corporation.

ACTION: Joint final rule.

SUMMARY: The Office of the Comptroller of the Currency (OCC), the Board of Governors of the Federal Reserve System (Board), and the Federal Deposit Insurance Corporation (FDIC) (collectively, the Agencies) are amending their respective risk-based capital standards to incorporate a measure for market risk to cover all positions located in an institution's trading account and foreign exchange and commodity positions wherever located. The final rule implements an amendment to the Basle Capital Accord that sets forth a supervisory framework for measuring market risk. The effect of the final rule is that any bank or bank holding company (institution) regulated by the OCC, the Board, or the FDIC, with significant exposure to market risk must measure that risk using its own internal value-at-risk model, subject to the parameters contained in this final rule, and must hold a commensurate amount of capital.

DATES: *Effective date:* January 1, 1997.

Compliance date: Mandatory compliance January 1, 1998.

FOR FURTHER INFORMATION CONTACT:

OCC: Margot Schwadron, Financial Analyst, Roger Tufts, Senior Economic Advisor, or Christina Benson, Capital Markets Specialist, Office of the Chief National Bank Examiner (202/874–5070). For legal issues, Andrew Gutierrez, Attorney, or Ron Shimabukuro, Senior Attorney, Legislative and Regulatory Activities Division (202/874–5090), Office of the Comptroller of the Currency, 250 E Street, SW, Washington, D.C. 20219.

Board: Roger Cole, Deputy Associate Director (202/452–2618), James Houpt, Assistant Director (202/452–3358), Barbara Bouchard, Supervisory Financial Analyst (202/452–3072), Division of Banking Supervision and Regulation; or Stephanie Martin, Senior Attorney (202/452–3198), Legal Division. For the Hearing impaired *only*, Telecommunication Device for the Deaf (TDD), Dorothea Thompson (202/452–3544), Federal Reserve Board, 20th and C Streets, NW, Washington, D.C. 20551.

FDIC: William A. Stark, Assistant Director (202/898–6972), Miguel Browne, Deputy Assistant Director (202/898–6789), Kenton Fox, Senior Capital Markets Specialist (202/898–7119), Division of Supervision; Jamey Basham, Counsel (202/898–7265), Legal Division, Federal Deposit Insurance Corporation, 550 17th Street, NW, Washington, D.C. 20429.

SUPPLEMENTARY INFORMATION:

I. Background

The Agencies' risk-based capital standards are based upon principles contained in the July 1988 agreement entitled ''International Convergence of Capital Measurement and Capital Standards'' (Accord). The Accord, developed by the Basle Committee on Banking Supervision (Committee) and endorsed by the central bank governors of the Group of Ten (G–10) countries,[1] provides a framework for assessing an institution's capital adequacy by weighting its assets and off-balance-sheet exposures on the basis of counterparty credit risk. In April 1995, the Committee issued a consultative proposal to amend the Accord and require institutions to measure and hold capital to cover their exposure to market risk, specifically, market risk associated with foreign exchange and commodity positions, and with debt and equity positions located in the trading account.[2]

Market Risk Proposal

On July 25, 1995, the Agencies published a joint proposal to amend their respective risk-based capital standards in accordance with the Committee's consultative proposal (60 FR 38082) (market risk proposal). Under the market risk proposal, an institution with significant trading activity must calculate a capital charge for market risk using either its own internal risk measurement model (internal models approach) or a risk-weighting process developed by the Committee (standardized approach). The market risk proposal requires an institution to integrate the market risk capital charge into its risk-based capital ratios used for supervisory purposes no later than year-end 1997.

The proposed internal models approach requires an institution to employ an internal model to calculate daily value-at-risk (VAR) measures[3] for each of four risk categories: interest rates, equity prices, foreign exchange rates, and commodity prices, including related options in each category. For regulatory capital purposes, the market risk proposal requires an institution to calibrate VAR measures to a ten-day movement in rates and prices and a 99 percent confidence level. An institution must base its VAR measures upon rates and prices observed over a period of at least one year. In deriving the overall VAR measure, an institution could take into account historical correlations within a risk category (e.g., between interest rates), but not across risk categories (e.g., not between interest rates and equity prices); in other words, the overall VAR measure equals the sum of the VAR measures for each risk category. An institution's capital charge for general market risk equals the greater of (1) the previous day's overall VAR measure, or (2) the average of the preceding 60 days' overall VAR measures multiplied by a factor of three (the multiplication factor). Moreover, the market risk proposal requires an institution to hold additional capital for specific risk associated with debt and equity positions in the trading account to the extent that its internal model does not incorporate that risk.

Under the market risk proposal, an institution's supervisor evaluates its internal modeling and risk management process to ensure that the institution is,

[1] The G–10 countries are Belgium, Canada, France, Germany, Italy, Japan, Netherlands, Sweden, Switzerland, the United Kingdom, and the United States. The Committee is comprised of representatives of the central banks and supervisory authorities from the G–10 countries and Luxembourg. The Agencies each adopted risk-based capital standards implementing the Accord in 1989.

[2] Market risk consists of general market risk and specific risk. General market risk refers to changes in the market value of on-balance-sheet assets and liabilities and off-balance-sheet items resulting from broad market movements, such as changes in the general level of interest rates, equity prices, foreign exchange rates, and commodity prices. Specific risk refers to changes in the market value of individual positions due to factors other than broad market movements and includes such risks as the credit risk of an instrument's issuer.

[3] The VAR measure represents an estimate of the amount by which an institution's positions in a risk category could decline due to general market movements during a given holding period, measured with a specified confidence level.

in fact, using its internal model for risk management purposes, that the calculation of VAR for capital purposes conforms with the specified quantitative criteria, and that the risk management process meets certain qualitative criteria, such as requiring independent model validations[4] and having an independent risk management unit. The market risk proposal allows an institution's supervisor to increase its multiplication factor (which applies to the 60-day VAR average) if backtesting results suggest problems with the institution's internal model or risk management process.

The standardized approach, the market risk proposal's alternative to the internal models approach, requires an institution to apply certain uniform techniques to calculate a capital charge for the general market risk of positions in the four risk categories, as well as for the specific risk of debt and equity positions located in the trading account. The total capital charge is the sum of the capital charges for each risk category.

An institution supports its market risk capital charges using a combination of Tier 1 and Tier 2 capital instruments (as defined in the credit risk-based capital standards), as well as a proposed new type of capital (Tier 3). Generally, Tier 3 capital consists of short-term subordinated debt subject to certain criteria, including a lock-in provision that prevents the issuer from repaying the debt even at maturity if the issuer's risk-based capital ratio is less than 8.0 percent following the payment.

In December 1995, the G–10 Governors endorsed a final amendment to the Accord adopting, with some modification, the Committee's market risk consultative proposal. At that same time, the Committee issued supervisory guidance specifying the effect of backtesting results on an institution's multiplication factor.

Backtesting Proposal

On March 7, 1996, the Agencies published for public comment a joint proposal on backtesting (61 FR 9114) (backtesting proposal) that reflected the Committee's backtesting guidance. The backtesting proposal requires an institution to compare its daily net profits and losses for the most recent 250 business days to the corresponding daily VAR measures generated for internal risk management purposes, using a 99 percent confidence level and a one-day period of rate and price movement. Each day for which a net trading loss exceeds the corresponding VAR measure is counted as an exception. An institution with five or more exceptions is presumed to have an inaccurate internal model and must increase its multiplication factor from three up to a maximum of four, depending on the number of exceptions. The backtesting proposal requires an institution to begin backtesting one year after it begins to calculate market risk capital charges. The delayed effective date for backtesting provides an institution with sufficient time to accumulate the required data for 250 business days.

II. Comment Summary

Market Risk Proposal

Together, the Agencies received 33 public comments on the market risk proposal. Commenters strongly supported the proposed internal models approach.[5] Most commenters believed that approach provides greater accuracy in measuring market risk than the standardized approach and creates incentives for institutions to continue improving their risk modeling and management techniques. Nevertheless, most commenters stated that the proposed modeling constraints were unnecessarily rigid and, especially when combined with the multiplication factor of three, result in excessive capital charges. The following discussion summarizes the responses to the Agencies' specific questions about the proposal.

General Topics

The Agencies asked commenters about the proposed criteria for determining which institutions must calculate capital charges for market risk. As proposed, the rule applied to: (1) Any institution with total assets exceeding $5 billion and either trading activity totaling at least 3 percent of total assets or the notional amount of trading account derivative contracts in excess of $5 billion; and (2) any institution with total assets of $5 billion or less and trading activity representing at least 10 percent of total assets. Commenters generally agreed that an institution with significant exposure to market risk should hold capital against that exposure. However, some believed it inappropriate to use the notional amount of trading account derivative contracts as a criterion. Further, some objected to different criteria for institutions of different asset size.

The Agencies asked about the burden associated with applying the market risk measure to both banks and bank holding companies and, with regard to bank holding companies, the burden associated with applying the measure both with and without Section 20 subsidiaries. The Agencies received mixed comments on the bank and bank holding company issue. Some believed the measure should apply only at the bank holding company level, pointing out that market risk usually is managed on a consolidated basis at the bank holding company level. Some favored applying the measure at the bank level. Others believed that an institution should have a choice, depending on how it manages risk. Most commenters discussing the Section 20 subsidiary issue supported applying the rule on a fully consolidated basis (i.e., including Section 20 subsidiaries).

The Agencies also asked whether to allow an institution to choose either the standardized or internal models approaches, whether to allow an institution to combine the two approaches for different risk categories, and whether the two approaches result in similar capital charges. While some commenters supported the flexibility of choosing between the internal models and standardized approaches, those commenters who anticipated that they would be subject to the market risk capital requirements indicated that they intend to use only the internal models approach. Other commenters thought that a choice of approaches could be useful in certain situations, for example, when an institution suddenly meets the applicability criteria but does not have a completely developed internal model. Several commenters expressed concerns about the accuracy of the standardized approach and urged its elimination. The few commenters that addressed the question about combining the two approaches supported the flexibility that this could provide. A few commenters stated that capital charges would be higher under the internal models approach than under the standardized approach.[6]

[4] The proposed qualitative criteria identify backtesting and stress testing as two model validation techniques. Backtests provide information about the accuracy of an internal model by comparing an institution's daily VAR measures to its corresponding daily trading profits and losses. Stress tests provide information about the impact of adverse market events on an institution's positions.

[5] Early versions of the Basle Committee's market risk amendment did not allow for the use of internal models to determine capital charges.

[6] The summary does not include comments on particular issues that might arise in applying the standardized approach (other than comments on specific risk) because, as discussed below, the Agencies have decided not to adopt the standardized approach in the final rule. Public comments are available from the Board's and OCC's Freedom of Information Office and the FDIC's Reading Room.

The Internal Models Approach

The market risk proposal imposed several quantitative standards on VAR measures used for regulatory capital purposes. The Agencies asked about the potential burden associated with these standards and whether the resulting capital charge sufficiently covered market risk. Commenters overwhelmingly responded that the proposed modeling constraints were unnecessarily rigid and would result in an excessive capital charge. Many commenters suggested the Agencies allow an institution to use the same internal modeling parameters for regulatory capital purposes as for internal risk management.

Modeling Constraints. With regard to the proposed modeling constraints, a few commenters supported basing capital charges on a ten-day period of rate and price movements. Others indicated that the period was too long, with most suggesting a one-day period. Some commenters objected to any specified period. Several commenters opposed the proposed 99 percent confidence level, noting that many institutions use lower confidence levels. Others supported the proposed level and still others suggested that regulators should not specify a confidence level.

Many commenters strongly asserted that the proposed multiplication factor of three was too high and suggested, instead, a minimum factor of one. Most of these commenters believed that the proposal did not adequately explain the rationale for a multiplication factor greater than one. Several asked for clarification about how the Agencies will measure a model's accuracy and adjust an institution's multiplication factor. They advocated objective, well-defined criteria to ensure that the Agencies apply the rules consistently.

Commenters strongly opposed the proposal's requirement that an institution aggregate VAR measures by simple summation across the risk categories. They asserted that ignoring the effects of cross correlation among risk categories overstates exposure and understates the merits of diversified portfolios.

The Agencies asked whether to require an institution to calculate VARs using two observation periods. Specifically, the Agencies asked about the tradeoff between enhanced prudential coverage and additional burden associated with requiring an institution to make two VAR measures, one based on a short observation period and one based on a longer (over one year) period. Most commenters believed dual observation periods would result in unnecessary costs and operational burden. Commenters had varying opinions about the optimal length of time for an observation period. Some commenters suggested that the Agencies allow an institution to choose an appropriate observation period.

Backtesting. The Agencies asked for comments about the potential burden associated with backtesting to evaluate the accuracy of an institution's internal model. Commenters generally viewed backtesting as a useful tool for model validation purposes. Most believed that backtesting should compare an institution's VAR calculated for internal risk management purposes (rather than for regulatory capital purposes) with actual profits and losses. A few commenters, noting the developing nature of backtesting generally, urged regulators not to prescribe specific regulations, guidelines, or methodologies for backtesting.

The Agencies also asked for comment about the types of stress tests institutions should perform as part of their internal risk management process. Several commenters recognized generally the importance of stress testing. These and other commenters responded that the Agencies should allow an institution to choose its methodology. Other commenters questioned whether a stress testing requirement was necessary.

Specific Risk. The Agencies noted that the internal models approach requires an institution to add a specific risk capital charge calculated using the standardized approach if its internal model does not adequately capture specific risk, and asked what modeling techniques the Agencies should consider when evaluating an institution's model for specific risk. While commenters generally agreed that an institution should integrate specific risk into its internal model, several objected to using capital charges calculated under the standardized approach as the benchmark for specific risk under the internal models approach. A few commenters asked for clarification about what constitutes sufficient integration of specific risk into a model to avoid the add-on capital charge. Some commenters noted that internal models that incorporate specific risk elements are still in the development stage, and stated that the Agencies should not include a specific risk requirement in the internal models approach.

The Agencies asked whether they should specifically define the term ''liquid and well-diversified,'' as applied to specific risk in equities, entitling an institution to a lower capital charge under the standardized approach. Commenters differed as to the appropriate degree of specificity. Some preferred a qualitative definition, as proposed, and others supported a more explicit and objective definition.

Other Issues

Some commenters raised issues not directly addressed in the Agencies' specific questions on the market risk proposal. One commenter suggested that an institution could determine internally whether to classify a debt instrument as qualifying or non-qualifying for purposes of determining the applicable specific risk weight factor (qualifying instruments receive a lower specific risk charge than non-qualifying instruments). Another commenter recommended a zero percent specific risk charge for debt instruments issued by local and regional governments. Another recommended a zero percent specific risk charge for instruments tracking an equity index.

Several commenters said that the proposed qualitative standards for an institution's risk management system were reasonable. One institution noted the qualitative standards provided a comprehensive set of guidelines. Some commenters questioned the marketability of short-term subordinated debt included as Tier 3 capital. A few commenters discussed the relationship between market risk and credit risk, with some arguing that when aggregating capital charges for credit and market risk the Agencies should permit an institution to recognize correlations between the two types of risk.

Backtesting Proposal

Together, the Agencies received 17 public comments on the backtesting proposal. Commenters to that proposal generally supported backtesting as a useful component of risk management. Several expressed concern that the proposal was unnecessarily rigid, noting that backtesting techniques are evolving, and suggested that the Agencies reexamine backtesting prior to implementation of the final rule. A few commenters questioned linking backtesting results to capital requirements. Some commenters expressed the view that the Agencies should take into account the severity of an exception, not just the number of exceptions. Other commenters believed that the Agencies should base capital requirements on an overall evaluation of an institution's risk management process and not merely on the number of exceptions. A few commenters suggested that the Agencies retain the

flexibility to adjust the multiplication factor below three if an institution's model exhibits superior performance.

Among other specific questions, the Agencies asked about the merits and problems associated with backtesting hypothetical trading outcomes (profits and losses) versus backtesting actual trading outcomes.[7] Almost all commenters supported using actual trading outcomes for backtesting purposes rather than hypothetical outcomes. One commenter supported giving an institution the option of what type of outcomes it will backtest. Commenters who supported using actual trading outcomes believed that these results appropriately included such factors as gains and losses from trading activity, fee income, net interest income, and management responses to changing portfolio conditions. Commenters who objected to using hypothetical results noted that costs associated with creating and operating a system for determining hypothetical results were significant. Other commenters discussed the potential burden of requiring an institution to calculate daily profits and losses with an unreasonable degree of exactness. They noted that global VARs are calculated by simulating changes in all market factors and calculating resulting changes in portfolio values. They suggested letting an institution estimate daily profit and losses using a consistent, reasonable methodology.

The Agencies asked for comment on what types of events or regime shifts (i.e., dramatic changes in market conditions that result in numerous exceptions in a short period of time for the same reason) might generate exceptions that do not warrant an increase in an institution's multiplication factor. Several commenters asserted that the Agencies should not list the types of regime shifts in advance. Two commenters suggested that the Agencies should treat any market-wide or asset-class event affecting a large number of institutions as a regime shift. Commenters suggested the following examples of regime shifts: sudden abnormal changes in interest or exchange rates, major political events, and natural disasters. Some commenters suggested that the Agencies should take into account an institution's reaction to unanticipated trading results, such as how it adapts its internal model to take into account changed conditions. A few commenters stated the Agencies should not penalize an institution for exceptions after it adjusts its model.

The Agencies asked about the proposed sample size of 250 independent observations. While several commenters on this question responded that the proposed sample size was appropriate, some believed that an institution should have flexibility to increase or decrease the sample size. A few commenters asserted that all institutions should use the same sample size.

Finally, the Agencies asked whether to require an institution to backtest against its VAR measures generated for internal risk management purposes, or against VAR measures calculated for market risk capital requirements. Most commenters supported the former approach.

III. Final Rule

The Agencies believe it is important for an institution with significant market risk to measure its exposure and hold commensurate amounts of capital. The Agencies support the market risk amendment to the Accord and are now issuing uniform market risk standards that will implement that amendment for institutions regulated by the Agencies. The final rule incorporates a measure for exposure to market risk into the Agencies' credit risk-based capital standards. By January 1, 1998, an institution that meets the applicability criteria must use its internal model to measure its exposure to market risk and hold capital in support of that exposure. The Agencies concur with commenters that an institution with significant exposure to market risk can most accurately measure that risk using detailed information available to the institution about its particular portfolio processed by its own risk measurement model. The final rule does not include the proposed standardized approach for measuring general market risk. The final rule does retain, however, the standardized approach methodologies for determining capital charges for specific risk, which an institution must use as the basis for its specific risk charge for debt and equity positions in its trading account.

The final rule supplements the existing credit risk-based capital standards by requiring an affected institution to adjust its risk-based capital ratio to reflect market risk. Specifically, an institution must adjust its risk-based capital ratio to take into account the general market risk of all positions located in its trading account and of foreign exchange and commodity positions, wherever located. Additionally, the institution must account for the specific risk of debt and equity positions located in its trading account. The positions covered by this final rule (except for foreign exchange positions outside the trading account and over-the-counter (OTC) derivatives) are excluded from the credit risk capital charge. Foreign exchange positions outside the trading account and OTC derivatives are subject to the market risk capital charge, as well as the credit risk capital charge.

Thus, the minimum capital charge for an institution that meets the applicability criteria is its credit risk capital charge as calculated under the Agencies' credit risk-based capital standards (excluding the positions previously noted) plus its measure for market risk as calculated under this final rule. The institution's risk-based capital ratio adjusted for market risk is its risk-based capital ratio for purposes of prompt corrective action and other statutory and regulatory purposes.

Subject to supervisory approval that its internal model and risk management processes meet the final rule's regulatory criteria, an institution may choose to comply with the final rule as early as January 1, 1997. Any institution that voluntarily complies with the final rule prior to January 1, 1998, must comply with all of its provisions, except for the backtesting provisions, which apply one year after the institution begins to comply with the other provisions of the final rule.

Institutions Subject to the Final Rule (Section 1(b))

The Agencies agree with commenters that all institutions with significant market risk, regardless of size, should measure their exposure and hold appropriate levels of capital. Thus, the Agencies have revised the applicability criteria to eliminate the differential criteria based on total asset size. The Agencies believe that the capital requirements are appropriate both for an institution whose trading activity is large relative to its total assets, and for an institution with a substantial volume of trading activity.

The final rule applies to any bank or bank holding company whose trading activity equals 10 percent or more of its total assets, or whose trading activity equals $1 billion or more.[8] For purposes

[7] Generally, hypothetical outcomes are trading outcomes that would result if the trading position as of the end of one business day went unchanged during the next business day. Hypothetical outcomes differ from actual outcomes because of the effects of such items as changes in portfolio composition over the holding period, fee income, commissions, and income from trading.

[8] The Federal Reserve agrees with commenters that since market risk usually is managed on a consolidated basis at the bank holding company level, market risk should be measured at that level

Continued

of these criteria, an institution's trading activity is defined as the sum of its trading assets and trading liabilities as reported in its most recent Consolidated Report of Condition and Income (Call Report) for a bank, or its most recent Y–9C Report for a bank holding company. Total assets means quarter-end total assets as most recently reported by the institution.

In addition, on a case-by-case basis, an Agency may require an institution that does not meet the applicability criteria to comply with the final rule if the Agency deems it necessary for safety and soundness purposes, or may exclude an institution that meets the applicability criteria. For example, an Agency may require an institution with trading activity less than $1 billion and less than 10 percent of total assets, but with significant foreign exchange exposure outside of its trading account to comply with the provisions of the final rule. On the other hand, an Agency may exempt an institution with trading activity that exceeds 10 percent of its total assets as a result of accounting, operational, or similar considerations, provided this does not raise safety and soundness concerns.

An institution that does not meet the applicability criteria may, subject to supervisory approval, comply voluntarily with the market risk rule, but only if it complies with all of the final rule's provisions (e.g., the backtesting requirements, after accumulating sufficient trading outcomes).

Covered Positions (Section 2(a))

An institution subject to the final rule must hold capital to support its exposure to general market risk arising from fluctuations in interest rates, equity prices, foreign exchange rates, and commodity prices and its exposure to specific risk associated with certain debt and equity positions. Covered positions include all positions in an institution's trading account and foreign exchange and commodity positions throughout the institution (whether or not in the trading account).

For market risk capital purposes, an institution's trading account is defined in the instructions to the Call Report. For example, the trading account includes on- and off-balance-sheet positions in financial instruments acquired with the intent to resell in order to profit from short-term price or rate movements (or other price or rate variations). An institution may include in its measure for general market risk certain non-trading account instruments that it deliberately uses to hedge trading positions. Those instruments are not subject to a specific risk capital charge, but instead, remain subject to the credit risk capital requirements. An institution may not include items in, or exclude items from, its trading account to manipulate associated capital charges. All positions included in the trading account must be marked to market and reflected in an institution's earnings statement.

The market risk capital charge applies to all of an institution's foreign exchange and commodities positions. An institution's foreign exchange positions include, for each currency, such items as its net spot position (including ordinary assets and liabilities denominated in a foreign currency), forward positions, guarantees that are certain to be called and likely to be unrecoverable, and any other items that react primarily to changes in exchange rates. An institution may, subject to supervisory approval, exclude from the market risk measure any structural positions in foreign currencies. For this purpose, structural positions include transactions designed to hedge an institution's capital ratios against the effect of adverse exchange rate movements on (1) subordinated debt, equity, or minority interests in consolidated subsidiaries and capital assigned to foreign branches that are denominated in foreign currencies, and (2) any positions related to unconsolidated subsidiaries and other items that are deducted from an institution's capital when calculating its capital base. An institution's commodity positions include all positions that react primarily to changes in commodity prices.

Adjustment to the Risk-Based Capital Ratio Calculation (Section 3)

An institution subject to the final rule must measure its market risk and hold capital on a daily basis to maintain an overall minimum 8.0 percent ratio of total qualifying capital to risk-weighted assets adjusted for market risk.

Risk-Based Capital Ratio Denominator (Section 3(a))

An institution's risk-based capital ratio denominator equals its adjusted risk-weighted assets plus its market risk equivalent assets. Adjusted risk-weighted assets are risk-weighted assets, as determined under the credit risk-based capital standards, less the risk-weighted amounts of all covered positions other than foreign exchange positions outside the trading account and OTC derivatives. Covered positions (except for foreign exchange positions outside the trading account and OTC derivatives) are no longer subject to a credit risk capital charge. An institution's market risk equivalent assets equals the measure for market risk, as determined under this final rule, multiplied by 12.5 (the reciprocal of the minimum 8.0 percent capital ratio).

Measure for Market Risk (Section 3(a)(2))

The measure for market risk consists of an institution's VAR-based capital charge plus an add-on capital charge for specific risk.[9] The VAR-based capital charge is the larger of either (1) the average VAR measure for the last 60 business days, calculated under the regulatory criteria and increased by a multiplication factor of between three and four; or (2) the previous day's VAR, calculated under the regulatory criteria but without the multiplication factor. An institution's multiplication factor is three unless its backtesting results indicate that a higher factor is appropriate or unless the institution's supervisor determines that another action is appropriate.

The Agencies believe this comparative approach will result in an institution holding capital sufficient to cover peak levels of market volatility. While the Agencies acknowledge some commenters' concerns that a multiplication factor of three (or higher) imposes excessive capital charges, the Agencies believe that adjustments in the final rule to the internal models approach (e.g., requiring only a single observation period and recognizing cross correlations among risk categories) result in capital charges that are appropriate, given existing industry practices. As institutions implement the final rule, the Agencies will monitor resulting capital charges, will continue to evaluate the appropriateness of the multiplication factor, and may consider further refinements or adjustments to the final rule.

for risk-based capital purposes. Thus, the final rule applies to bank holding companies on a fully consolidated basis. In addition, because the Accord applies to internationally active banks, the final rule applies to consolidated banks. The Agencies may monitor the market risk exposure of institutions on a non-consolidated basis to ensure that significant imbalances within an organization do not avoid supervision.

[9] The final rule also provides that, on a case-by-case basis, an Agency may permit an institution to measure de minimis exposures to market risk using other techniques, provided the exposure is truly de minimis, the associated risk is adequately measured, and integration of the exposure into the institution's internal model would impose an unnecessary regulatory burden.

Risk-Based Capital Ratio Numerator (Section 3(b))

An institution's risk-based capital ratio numerator consists of a combination of core (Tier 1) capital, supplemental (Tier 2) capital[10] and a third tier of capital (Tier 3), which consists of short-term subordinated debt that meets certain conditions. Specifically, Tier 3 capital must have an original maturity of at least two years; it must be unsecured and fully paid up; it must be subject to a lock-in clause that prevents the issuer from repaying the debt even at maturity if the issuer's capital ratio is, or with repayment would become, less than the minimum 8.0 percent risk-based capital ratio; it must not be redeemable before maturity without the prior approval of the institution's supervisor; and it must not contain or be covered by any covenants, terms, or restrictions that may be inconsistent with safe and sound banking practices. An institution may use Tier 3 capital only to meet market risk capital requirements.

To determine its risk-based capital ratio numerator, an institution should first allocate Tier 1 and Tier 2 capital equal to 8.0 percent of its risk-weighted assets (adjusted for the positions that are no longer subject to the credit risk rules). Next, the institution should allocate Tier 1, Tier 2, and Tier 3 capital to support its measure for market risk. The risk-based capital ratio numerator (i.e., total qualifying capital), is the sum of Tier 1 capital (whether or not allocated for credit risk or market risk), Tier 2 capital (whether or not allocated for credit risk or market risk and subject to certain limits), and Tier 3 capital (allocated for market risk and subject to certain limits).

The Agencies continue to believe that Tier 1 capital should constitute a substantial proportion of an institution's total capital. Thus, the final rule includes the existing credit risk-based capital constraints that at least 50 percent of an institution's total qualifying capital must be Tier 1 capital, and that term subordinated debt (and intermediate-term preferred stock and related surplus) may not exceed 50 percent of Tier 1 capital. In addition, the sum of Tier 2 and Tier 3 capital allocated for market risk must not exceed 250 percent of Tier 1 capital allocated for market risk. This requirement means that an institution must support at least 28.6 percent of its measure for market risk with Tier 1 capital.

Internal Models (Section 4)

The Agencies recognize that institutions can and will use different assumptions and modeling techniques and that such differences often reflect distinct business strategies and approaches to risk management. For example, an institution may calculate VAR using internal models based on variance-covariance matrices, historical simulations, Monte Carlo simulations, or other statistical approaches. In all cases, however, the model must cover the institution's material risks.[11] While the Agencies are not specifying modeling parameters for internal risk management purposes, the final rule does include minimum qualitative requirements for internal risk management processes, as well as certain quantitative requirements for the parameters and assumptions for internal models used to measure market risk exposure for regulatory capital purposes.

Qualitative Requirements (Section 4(b))

The qualitative requirements reiterate several basic components of sound risk management. For example, one of the final rule's qualitative requirements is that an institution must have a risk control unit that reports directly to senior management and that is independent from business trading functions. The Agencies expect that a risk control unit will conduct regular backtests to evaluate the model's accuracy and stress tests to identify the impact of adverse market events on the institution's portfolio.

The other qualitative requirements in the final rule are also elements of sound risk management practices. For example, an institution must have an internal model that is integrated into its daily management, must have policies and procedures for conducting appropriate stress tests and backtests and for responding to the results of those tests, and must conduct independent reviews of its risk measurement and management systems at least annually.

The Agencies agree with commenters that an institution should develop and use stress tests appropriate to its particular situation. Thus, the final rule does not require specific stress test methodologies. The Agencies expect an institution to conduct stress tests that are rigorous and comprehensive and that cover a range of factors that could create extraordinary losses in a trading portfolio, or make the control of risk in a portfolio difficult. The Agencies believe stress tests should be both qualitative and quantitative, should incorporate both market risk and liquidity aspects of market disturbances, and should reflect the impact of an event on positions with linear and non-linear price characteristics. Where stress tests reveal a particular vulnerability, the institution should take effective steps to appropriately manage those risks.

An institution's independent review of its risk management process should include both the activities of business trading units and the risk control unit. For example, the Agencies expect that an institution's review would include assessing whether its risk management system is fully integrated into the daily management process and whether its risk management system is adequately documented. The review should evaluate the organizational structure of the risk control unit and analyze the approval process for risk pricing models and valuation systems. The review should also consider the scope of market risks captured by the risk measurement model, the accuracy and completeness of position data, the verification of the consistency, timeliness, and reliability of data sources used to run the internal model, the accuracy and appropriateness of volatility and correlation assumptions, and the validity of valuation and risk transformation calculations.

Market Risk Factors (Section 4(c))

The final rule provides that an institution's internal model must use risk factors that address market risk associated with interest rates, equity prices, exchange rates, and commodity prices, including the market risk associated with options in each of these risk categories. Although an institution has discretion to use market risk factors that it has determined affect the value of its positions and the risks to which it is exposed, the Agencies expect an institution to use sufficient risk factors to cover the risks inherent in its portfolio.

[10] Tier 1 and Tier 2 capital components are discussed in the Agencies' credit risk capital standards. Generally, Tier 1 includes common stockholder's equity, noncumulative perpetual preferred stock, and minority equity interests in consolidated subsidiaries, less goodwill and other deductions. Bank holding companies may include certain amounts of cumulative perpetual preferred stock in Tier 1. Tier 2 includes the allowance for loan and lease losses, other preferred stock, and subordinated debt with an original average maturity of at least five years.

[11] For an institution using an externally developed or outsource risk measurement model, the model may be used for risk-based capital purposes provided it complies with the requirements of the final rule, management fully understands the model, the model is integrated into the institution's daily risk management, and the institution's overall risk management process is sound.

For example, the Agencies believe that interest rate risk factors should correspond to interest rates in each currency in which the institution has interest-rate-sensitive positions. The risk measurement system should model the yield curve using one of a number of generally accepted approaches, such as by estimating forward rates or zero coupon yields, and should incorporate risk factors to capture spread risk. The yield curve should be divided into various maturity segments to capture variation in the volatility of rates along the yield curve. For material exposures to interest rate movements in the major currencies and markets, modeling techniques should capture at least six segments of the yield curve.

The risk measurement system should incorporate risk factors corresponding to individual foreign currencies in which the institution's positions are denominated, to each of the equity markets in which the institution has significant positions (at a minimum, a risk factor should capture market-wide movements in equity prices), and to each of the commodity markets in which the institution has significant positions. Risk factors should measure the volatilities of rates and prices underlying option positions. An institution with a large or complex options portfolio should measure the volatilities of options positions by different maturities. The sophistication and nature of the modeling techniques should correspond to the level of the institution's exposure.

Quantitative Requirements (Section 4(d))

While an institution has flexibility in developing the precise nature of its model for internal risk management purposes, the Agencies continue to believe that when determining capital charges for exposure to market risk an institution's VAR measures should meet certain quantitative requirements. Such requirements are designed to ensure that an institution with significant market risk holds prudential levels of capital and that capital charges are sufficiently consistent across institutions with similar exposures. The Agencies have considered commenters' concerns that the proposed modeling constraints, when combined, would result in excessive capital charges. The Agencies believe that certain of the proposed constraints, such as a 99 percent (one-tailed) confidence level and a ten-day movement in rates and prices, are appropriate and therefore they have been retained in the final rule. However, the Agencies agree with commenters that other proposed or considered requirements are not necessary. For example, the Agencies have determined that a dual observation period would unnecessarily increase regulatory burden without providing a substantial benefit. Thus, the final rule employs a single observation period.

The Agencies also agree with commenters that, for regulatory capital purposes, an institution should be permitted to use models that recognize cross correlations among risk categories. The final rule permits an institution to recognize cross correlations. The Agencies believe this revision eliminates a significant source of rigidity in the market risk proposal and should result in internal modeling for capital purposes that is more consistent with observed industry practice. The Agencies also believe this revision will appropriately recognize and reward portfolio diversification. These adjustments to the quantitative requirements are consistent with the final amendment to the Accord.

The final rule contains the following quantitative requirements for an institution's VAR measures, upon which regulatory capital requirements are based:

(1) VAR measures must be computed each business day based on a 99 percent (one-tailed) confidence level of estimated maximum loss.

(2) VAR measures must be based on a price shock equivalent to a ten-day movement in rates or prices. An institution may adjust VAR measures (including VAR measures for options) based on shorter periods to a ten-day standard (e.g., by multiplying by the square root of time).[12] The Agencies do not believe that a price or rate movement period less than ten days is sufficient to reflect the risk associated with options positions (or other instruments with non-linear price characteristics), but recognize that it may be overly burdensome for an institution to apply a ten-day price or rate movement to such positions at this time. The Agencies expect an institution with concentrations of options to make substantive progress in developing a modeling system that measures the non-linear price characteristics of options positions (or other instruments with non-linear price characteristics), over a full ten-day period.

(3) Internal models must include the non-linear price characteristics of options positions and the sensitivity of the market value of those positions to changes in the volatility of the option's underlying rates and prices.

(4) VAR measures must be based on a minimum historical observation period of at least one year for estimating future price and rate changes. A model that uses a weighting scheme or other method for the historical observation period must use an effective observation period of at least one year. That is, the weighted average time lag of the individual observations must be at least six months, the figure that would prevail in an equally weighted one-year observation period.

(5) An institution must update its model data at least once every three months and more frequently if market conditions warrant.

(6) VAR measures may incorporate empirical correlations (calculated from historical data on rates and prices) both within broad risk categories and across broad risk categories, subject to agreement by the institution's supervisor that the model's system for measuring such correlation is sound. If an institution's model does not incorporate empirical correlations across risk categories, then the bank must calculate the VAR measures used for regulatory capital purposes by summing the separate VAR measures for the four broad risk categories (i.e., interest rates, equity prices, foreign exchange rates, and commodity prices).

The Agencies believe that, taken together, the modeling parameters are appropriate for regulatory capital purposes and also that they are compatible, as much as practicable, with existing modeling procedures. During the examination process, the Agencies will review an institution's risk management process and internal model to ensure that the model processes all relevant data and that modeling and risk management practices conform to the parameters and requirements of the final rule.[13]

Backtesting (Section 4(e))

The Agencies have considered commenters' responses to the backtesting proposal. The Agencies believe backtesting can be a useful tool for internal model validation, and have determined to include the backtesting provisions in the final rule, as proposed. An institution subject to the final rule must perform backtests of its VAR measures as calculated for internal risk management purposes. The backtests must compare daily VAR measures

[12] For example, under certain statistical assumptions, an institution can estimate the ten-day price volatility of an instrument by multiplying the volatility calculated on one-day changes by the square root of ten (approximately 3.16).

[13] When reviewing an institution's internal model for risk-based capital purposes, the Agencies may consider reports and opinions about the accuracy of the model that have been generated by external auditors or qualified consultants.

calibrated to a one-day movement in rates and prices and a 99 percent (one-tailed) confidence level against the institution's actual daily net trading profit or loss (trading outcome) for each of the preceding 250 business days. The backtests must be performed once each quarter.[14] Net trading outcomes include such items as fees and commissions associated with trading activities, as well as changes in market valuations associated with changing portfolio positions.

An institution must identify the number of occurrences when its net trading loss (if any) for a particular day exceeds the corresponding daily VAR measure. In general, an institution's multiplication factor increases incrementally beginning with five or more exceptions during the previous 250 business days, and rises to a multiplication factor of four for an institution with 10 or more exceptions during the period. While the number of exceptions creates a presumption as to an institution's multiplication factor, the institution's supervisor may make other adjustments to the multiplication factor or may take other appropriate actions. For example, the supervisor may exclude exceptions that result from regime shifts, such as sudden abnormal changes in interest rates or exchange rates, major political events, or natural disasters. The supervisor may also consider such other factors as the magnitude of an exception (that is, the extent of the difference between the VAR measure and the actual trading loss), and an institution's reaction in response to an exception.

The Agencies recognize that backtesting is evolving and acknowledge commenters' concerns that it may not be appropriate to penalize an institution by applying a higher multiplication factor if the institution has refined the accuracy of its model in response to an exception or has taken other action to improve its risk management processes. The Agencies emphasize that they will implement the backtesting requirements of the final rule with significant flexibility and examiner judgment. The Agencies will continue to monitor industry progress in developing backtesting methodologies and may consider adjusting the backtesting requirements in the near future.

[14] An institution's obligation to backtest for regulatory capital purposes does not arise until the institution has been subject to the final rule for 250 business days (approximately one year) and, thus, has accumulated the requisite number of observations to be used in backtesting.

Specific Risk (Section 5)

The Agencies agree with the provisions in the final amendment to the Accord that require an institution to hold capital in support of the specific risk associated with debt and equity positions in an institution's trading account. Thus, the final rule provides that an institution must measure and hold capital in support of specific risk associated with those positions. The capital charge for specific risk is determined either by an institution's internal model or by the standardized risk measurement techniques specified by the Agencies (the standardized approach).

Standardized Approach

Under the standardized approach, the specific risk charge for debt positions is calculated by multiplying the current market value of each net long or short position in a trading account debt instrument by the appropriate specific risk weighting factor as set forth in the final rule, based on the identity of the obligor, and in the case of some instruments such as corporate debt, on the credit rating and remaining maturity of the instrument. An institution must risk weight derivatives (e.g., swaps, futures, forwards, or options on certain debt instruments) according to the relevant underlying instrument. For example, for a forward contract, an institution must risk weight the market value of the effective notional amount of the underlying instrument (or index portfolio). An institution may net long and short positions in identical debt instruments with exactly the same issuer, coupon, currency, and maturity. An institution may also offset a matched position in a derivative instrument and its corresponding underlying instrument. The specific risk weighting factor for debt instruments of OECD[15] central governments is zero percent. Other debt instruments with qualifying ratings (essentially investment grade corporate securities) receive risk weights ranging from 0.25 percent to 1.6 percent, depending on remaining maturity. Nonqualifying debt instruments receive a risk weight of 8.0 percent.

The specific risk charge for equity positions is based on an institution's gross equity position for each national market. The gross equity position is defined as the sum of all long and short equity positions, including positions arising from derivatives such as equity swaps, forwards, futures, and options. An institution must risk weight the current market value of each gross equity position by the appropriate factor. An institution must risk weight derivatives according to the relevant underlying equity instrument. An institution may net long and short positions in identical equity issues or indices in each national market. An institution may also offset a matched position in a derivative instrument and its corresponding underlying instrument.

The specific risk charge is 8.0 percent of the gross equity position, unless the institution's portfolio is both liquid and well-diversified, in which case the capital charge is 4.0 percent. A portfolio is liquid and well-diversified if: (1) it is characterized by a limited sensitivity to price changes of any single equity or closely related group of equity issues held in a portfolio; (2) the volatility of the portfolio's value is not dominated by the volatility of any individual equity issue or by equity issues from any single industry or economic sector; (3) it contains a large number of individual equity positions, with no single position representing a substantial portion of the portfolio's total market value; and (4) it consists mainly of issues traded on organized exchanges or in well-established over-the-counter markets.

For positions in an index comprising a diversified portfolio of equities, the specific risk charge is 2.0 percent of the net long or short position in the index. In addition, a 2.0 percent specific risk charge applies to only one side (long or short) in the case of certain futures-related arbitrage strategies (for instance, long and short positions in the same index at different dates or different market centers, and long and short positions at the same date in different, but similar indices). Finally, under certain conditions, futures positions on a broadly-based index that are matched against positions in the equities comprising the index are subject to a specific risk charge of 2.0 percent against each side of the transaction.

Internal Models Approach

The final rule permits an institution to use its internal model to determine capital charges for specific risk if it can demonstrate to its supervisor that the modeling process adequately addresses elements of specific risk for debt and/or equity positions. In particular, an institution may use the model-based estimates of specific risk in place of the standardized capital charge. However, if the specific risk component of the institution's VAR measure (when multiplied by the backtesting multiplication factor, with respect to a

[15] The Organization for Economic Cooperation and Development (OECD) is defined in the credit risk-based capital standards.

60-day average VAR figure) is not equal to at least 50 percent of the specific risk charge resulting from the standardized calculation, then the institution has a specific risk add-on in the amount of the difference. For example, if the standardized approach indicates a specific risk charge of $100, but the institution's 60-day average VAR figure includes only $10 for specific risk, then the institution has a specific risk add-on of $20 (that is, 50 percent of $100 minus three times $10). However, if the 60-day average VAR figure includes $20 from specific risk, then the institution would have no specific risk add-on because the VAR-based charge (three times $20) exceeds 50 percent of $100.

An institution (in conjunction with its supervisor) must separately determine whether its model incorporates specific risk for debt positions and equity positions. For instance, if the model addresses the specific risk of debt positions but not equity positions, then the institution can use the model-based specific risk charge (subject to the limitations described earlier) for debt positions, but must use the full standard specific risk charge for equity positions. If, however, the model addresses the specific risk of both debt and equity positions, then the institution must make the comparison based on the total specific risk figure for debt and equity positions, taking into account any correlations between the specific risk of debt and equity positions that are built into the model.

This treatment provides an institution with an incentive to incorporate specific risk into its internal model, while maintaining an overall floor on the amount of capital it must hold against specific risk. The Agencies believe that a minimum requirement for specific risk is useful, at least for an initial period, since methods for incorporating specific risk into VAR models are still in a process of development at many institutions. The Agencies will continue to study these developments and likely will issue further guidance on these procedures as institutions implement this final rule in the coming months.

IV. Regulatory Flexibility Act Analysis

OCC Regulatory Flexibility Act Analysis

Pursuant to section 605(b) of the Regulatory Flexibility Act, the OCC certifies that this final rule will not have a significant impact on a substantial number of small business entities in accord with the spirit and purposes of the Regulatory Flexibility Act (5 U.S.C. 601 *et seq.*). Accordingly, a regulatory flexibility analysis is not required. The impact of this final rule on banks regardless of size is expected to be minimal. Further, the OCC's comparison of the applicability section of this final rule to Call Report data on all existing banks shows that application of the rule to small banks will be the rare exception.

Board Regulatory Flexibility Act Analysis

Pursuant to section 605(b) of the Regulatory Flexibility Act, the Board does not believe this final rule will have a significant impact on a substantial number of small business entities in accord with the spirit and purposes of the Regulatory Flexibility Act (5 U.S.C. 601 *et seq.*). The Board's comparison of the applicability section of this final rule to Call Report data on all existing banks shows that application of the rule to small entities will be the rare exception. Accordingly, a regulatory flexibility analysis is not required. In addition, because the risk-based capital standards generally do not apply to bank holding companies with consolidated assets of less than $150 million, this rule will not affect such companies.

FDIC Regulatory Flexibility Act Analysis

Pursuant to section 605(b) of the Regulatory Flexibility Act (Pub. L. 96–354, 5 U.S.C. 601 *et seq.*), it is certified that the final rule will not have a significant impact on a substantial number of small entities. The FDIC's comparison of the applicability section of this final rule to Call Report data on all existing banks shows that application of the rule to small entities will be the rare exception.

V. Paperwork Reduction Act

OCC Paperwork Reduction Act

The OCC has determined that his final rule does not increase the regulatory paperwork burden of banking organizations pursuant to the provisions of the Paperwork Reduction Act (44 U.S.C. 3501 *et seq.*).

Board Paperwork Reduction Act

In accordance with the Paperwork Reduction Act of 1995 (44 U.S.C. Ch. 3506; 5 CFR 1320 Appendix A.1), the Board reviewed the proposed rule under the authority delegated to the Board by the Office of Management and Budget. No collections of information pursuant to the Paperwork Reduction Act are contained in the final rule.

FDIC Paperwork Reduction Act

The FDIC has determined that this final rule does not contain any collections of information as defined by the Paperwork Reduction Act (44 U.S.C. 3501 *et seq.*).

VI. OCC Executive Order 12866 Determination

The OCC has determined that this final rule is not a significant regulatory action under Executive Order 12866.

VII. OCC Unfunded Mandates Reform Act of 1995 Determination

The OCC has determined that this final rule will not result in expenditures by state, local, and tribal governments, or by the private sector, of $100 million or more in any one year. Accordingly, a budgetary impact statement is not required under section 202 of the Unfunded Mandates Reform Act of 1995. This final rule will apply only to a small number of national banks. Moreover, most (if not all) of those banks already have internal VAR models that measure market risk, thus reducing this final rule's implementation costs.

List of Subjects

12 CFR Part 3

Administrative practice and procedure, Capital, National banks, Reporting and recordkeeping requirements, Risk.

12 CFR Part 208

Accounting, Agriculture, Banks, banking, Confidential business information, Crime, Currency, Federal Reserve System, Mortgages, Reporting and recordkeeping requirements, Securities.

12 CFR Part 225

Administrative practice and procedure, Banks, banking, Federal Reserve System, Holding companies, Reporting and recordkeeping requirements, Securities.

12 CFR Part 325

Administrative practice and procedure, Banks, banking, Capital adequacy, Reporting and recordkeeping requirements, Savings associations, State non-member banks.

Office of the Comptroller of the Currency

12 CFR CHAPTER I

Authority and Issuance

For the reasons set out in the joint preamble, part 3 of title 12, chapter I of the Code of Federal Regulations is amended as follows:

PART 3—[AMENDED]

1. The authority citation for part 3 continues to read as follows:

Authority: 12 U.S.C. 93a, 161, 1818, 1828(n), 1828 note, 1831n note, 1835, 3907, and 3909.

2. Section 3.6 is amended by revising paragraph (a) to read as follows:

§ 3.6 Minimum capital ratios.

(a) *Risk-based capital ratio.* All national banks must have and maintain the minimum risk-based capital ratio as set forth in appendix A (and, for certain banks, in appendix B).

* * * * *

3. A new appendix B is added to part 3 to read as follows:

Appendix B to Part 3—Risk-Based Capital Guidelines; Market Risk Adjustment

Section 1. Purpose, Applicability, Scope, and Effective Date

(a) *Purpose.* The purpose of this appendix is to ensure that banks with significant exposure to market risk maintain adequate capital to support that exposure.[1] This appendix supplements and adjusts the risk-based capital ratio calculations under appendix A of this part with respect to those banks.

(b) *Applicability.* (1) This appendix applies to any national bank whose trading activity[2] (on a worldwide consolidated basis) equals:

(i) 10 percent or more of total assets;[3] or

(ii) $1 billion or more.

(2) The OCC may apply this appendix to any national bank if the OCC deems it necessary or appropriate for safe and sound banking practices.

(3) The OCC may exclude a national bank otherwise meeting the criteria of paragraph (b)(1) of this section from coverage under this appendix if it determines the bank meets such criteria as a consequence of accounting, operational, or similar considerations, and the OCC deems it consistent with safe and sound banking practices.

(c) *Scope.* The capital requirements of this appendix support market risk associated with a bank's covered positions.

(d) *Effective date.* This appendix is effective as of January 1, 1997. Compliance is not mandatory until January 1, 1998. Subject to supervisory approval, a bank may opt to comply with this appendix as early as January 1, 1997.[4]

Section 2. Definitions

For purposes of this appendix, the following definitions apply:

(a) *Covered positions* means all positions in a bank's trading account, and all foreign exchange[5] and commodity positions, whether or not in the trading account.[6] Positions include on-balance-sheet assets and liabilities and off-balance-sheet items. Securities subject to repurchase and lending agreements are included as if they are still owned by the lender.

(b) *Market risk* means the risk of loss resulting from movements in market prices. Market risk consists of general market risk and specific risk components.

(1) *General market risk* means changes in the market value of covered positions resulting from broad market movements, such as changes in the general level of interest rates, equity prices, foreign exchange rates, or commodity prices.

(2) *Specific risk* means changes in the market value of specific positions due to factors other than broad market movements and includes such risk as the credit risk of an instrument's issuer.

(c) *Tier 1* and *Tier 2* capital are the same as defined in appendix A of this part.

(d) *Tier 3 capital* is subordinated debt that is unsecured; is fully paid up; has an original maturity of at least two years; is not redeemable before maturity without prior approval by the OCC; includes a lock-in clause precluding payment of either interest or principal (even at maturity) if the payment would cause the issuing bank's risk-based capital ratio to fall or remain below the minimum required under appendix A of this part; and does not contain and is not covered by any covenants, terms, or restrictions that are inconsistent with safe and sound banking practices.

(e) *Value-at-risk (VAR)* means the estimate of the maximum amount that the value of covered positions could decline during a fixed holding period within a stated confidence level, measured in accordance with section 4 of this appendix.

Section 3. Adjustments to the Risk-Based Capital Ratio Calculations

(a) *Risk-based capital ratio denominator.* A bank subject to this appendix shall calculate its risk-based capital ratio denominator as follows:

(1) *Adjusted risk-weighted assets.* Calculate adjusted risk-weighted assets, which equals risk-weighted assets (as determined in accordance with appendix A of this part), excluding the risk-weighted amounts of all covered positions (except foreign exchange positions outside the trading account and over-the-counter derivative positions).[7]

(2) *Measure for market risk.* Calculate the measure for market risk, which equals the sum of the VAR-based capital charge, the specific risk add-on (if any), and the capital charge for de minimis exposure (if any).

(i) *VAR-based capital charge.* The VAR-based capital charge equals the higher of:

(A) The previous day's VAR measure; or

(B) The average of the daily VAR measures for each of the preceding 60 business days multiplied by three, except as provided in section 4(e) of this appendix;

(ii) *Specific risk add-on.* The specific risk add-on is calculated in accordance with section 5 of this appendix; and

(iii) *Capital charge for de minimis exposure.* The capital charge for de minimis exposure is calculated in accordance with section 4(a) of this appendix.

(3) *Market risk equivalent assets.* Calculate market risk equivalent assets by multiplying the measure for market risk (as calculated in paragraph (a)(2) of this section) by 12.5.

(4) *Denominator calculation.* Add market risk equivalent assets (as calculated in paragraph (a)(3) of this section) to adjusted risk-weighted assets (as calculated in paragraph (a)(1) of this section). The resulting sum is the bank's risk-based capital ratio denominator.

(b) *Risk-based capital ratio numerator.* A bank subject to this appendix shall calculate its risk-based capital ratio numerator by allocating capital as follows:

(1) *Credit risk allocation.* Allocate Tier 1 and Tier 2 capital equal to 8.0 percent of adjusted risk-weighted assets (as calculated in paragraph (a)(1) of this section).[8]

(2) *Market risk allocation.* Allocate Tier 1, Tier 2, and Tier 3 capital equal to the measure for market risk as calculated in paragraph (a)(2) of this section. The sum of Tier 2 and Tier 3 capital allocated for market risk must not exceed 250 percent of Tier 1 capital allocated for market risk. (This requirement means that Tier 1 capital allocated in this paragraph (b)(2) must equal at least 28.6 percent of the measure for market risk.)

(3) *Restrictions.* (i) The sum of Tier 2 capital (both allocated and excess) and Tier 3 capital (allocated in paragraph (b)(2) of this section) may not exceed 100 percent of Tier 1 capital (both allocated and excess).[9]

(ii) Term subordinated debt (and intermediate-term preferred stock and related surplus) included in Tier 2 capital (both allocated and excess) may not exceed 50 percent of Tier 1 capital (both allocated and excess).

(4) *Numerator calculation.* Add Tier 1 capital (both allocated and excess), Tier 2 capital (both allocated and excess), and Tier 3 capital (allocated under paragraph (b)(2) of this section). The resulting sum is the bank's risk-based capital ratio numerator.

Section 4. Internal Models

(a) *General.* For risk-based capital purposes, a bank subject to this appendix

[1] This appendix is based on a framework developed jointly by supervisory authorities from the countries represented on the Basle Committee on Banking Supervision and endorsed by the Group of Ten Central Bank Governors. The framework is described in a Basle Committee paper entitled ''Amendment to the Capital Accord to Incorporate Market Risk,'' January 1996.

[2] Trading activity means the gross sum of trading assets and liabilities as reported in the bank's most recent quarterly Consolidated Report of Condition and Income (Call Report).

[3] Total assets means quarter-end total assets as reported in the bank's most recent Call Report.

[4] A bank that voluntarily complies with the final rule prior to January 1, 1998, must comply with all of its provisions.

[5] Subject to supervisory review, a bank may exclude structural positions in foreign currencies from its covered positions.

[6] The term trading account is defined in the instructions to the Call Report.

[7] Foreign exchange positions outside the trading account and all over-the-counter derivative positions, whether or not in the trading account, must be included in adjusted risk-weighted assets as determined in appendix A of this part.

[8] A bank may not allocate Tier 3 capital to support credit risk (as calculated under appendix A).

[9] Excess Tier 1 capital means Tier 1 capital that has not been allocated in paragraphs (b)(1) and (b)(2) of this section. Excess Tier 2 capital means Tier 2 capital that has not been allocated in paragraph (b)(1) and (b)(2) of this section, subject to the restrictions in paragraph (b)(3) of this section.

must use its internal model to measure its daily VAR, in accordance with the requirements of this section.[10] The OCC may permit a bank to use alternative techniques to measure the market risk of de minimis exposures so long as the techniques adequately measure associated market risk.

(b) *Qualitative requirements.* A bank subject to this appendix must have a risk management system that meets the following minimum qualitative requirements:

(1) The bank must have a risk control unit that reports directly to senior management and is independent from business trading units.

(2) The bank's internal risk measurement model must be integrated into the daily management process.

(3) The bank's policies and procedures must identify, and the bank must conduct, appropriate stress tests and backtests.[11] The bank's policies and procedures must identify the procedures to follow in response to the results of such tests.

(4) The bank must conduct independent reviews of its risk measurement and risk management systems at least annually.

(c) *Market risk factors.* The bank's internal model must use risk factors sufficient to measure the market risk inherent in all covered positions. The risk factors must address interest rate risk,[12] equity price risk, foreign exchange rate risk, and commodity price risk.

(d) *Quantitative requirements.* For regulatory capital purposes, VAR measures must meet the following quantitative requirements:

(1) The VAR measures must be calculated on a daily basis using a 99 percent, one-tailed confidence level with a price shock equivalent to a ten-business day movement in rates and prices. In order to calculate VAR measures based on a ten-day price shock, the bank may either calculate ten-day figures directly or convert VAR figures based on holding periods other than ten days to the equivalent of a ten-day holding period (for instance, by multiplying a one-day VAR measure by the square root of ten).

(2) The VAR measures must be based on an historical observation period (or effective observation period for a bank using a weighting scheme or other similar method) of at least one year. The bank must update data sets at least once every three months or more frequently as market conditions warrant.

(3) The VAR measures must include the risks arising from the non-linear price characteristics of options positions and the sensitivity of the market value of the positions to changes in the volatility of the underlying rates or prices. A bank with a large or complex options portfolio must measure the volatility of options positions by different maturities.

(4) The VAR measures may incorporate empirical correlations within and across risk categories, provided that the bank's process for measuring correlations is sound. In the event that the VAR measures do not incorporate empirical correlations across risk categories, then the bank must add the separate VAR measures for the four major risk categories to determine its aggregate VAR measure.

(e) *Backtesting.* (1) Beginning one year after a bank starts to comply with this appendix, a bank must conduct backtesting by comparing each of its most recent 250 business days' actual net trading profit or loss[13] with the corresponding daily VAR measures generated for internal risk measurement purposes and calibrated to a one-day holding period and a 99 percent, one-tailed confidence level.

(2) Once each quarter, the bank must identify the number of exceptions, that is, the number of business days for which the magnitude of the actual daily net trading loss, if any, exceeds the corresponding daily VAR measure.

(3) A bank must use the multiplication factor indicated in Table 1 of this appendix in determining its capital charge for market risk under section 3(a)(2)(i)(B) of this appendix until it obtains the next quarter's backtesting results, unless the OCC determines that a different adjustment or other action is appropriate.

TABLE 1.—MULTIPLICATION FACTOR BASED ON RESULTS OF BACKTESTING

Number of exceptions	Multiplication factor
4 or fewer	3.00
5	3.40
6	3.50
7	3.65
8	3.75
9	3.85
10 or more	4.00

Section 5. Specific Risk

(a) *Specific risk add-on.* For purposes of section 3(a)(2)(ii) of this appendix, a bank's specific risk add-on equals the standard specific risk capital charge calculated under paragraph (c) of this section. If, however, a bank can demonstrate to the OCC that its internal model measures the specific risk of covered debt and/or equity positions and that those measures are included in the VAR-based capital charge in section 3(a)(2)(i) of this appendix, then the bank may reduce or eliminate its specific risk add-on under this section. The determination as to whether a model incorporates specific risk must be made separately for covered debt and equity positions.

(1) If a model includes the specific risk of covered debt positions but not covered equity positions (or vice versa), then the bank can reduce its specific risk charge for the included positions under paragraph (b) of this section. The specific risk charge for the positions not included equals the standard specific risk capital charge under paragraph (c) of this section.

(2) If a model addresses the specific risk of both covered debt and equity positions, then the bank can reduce its specific risk charge for both covered debt and equity positions under paragraph (b) of this section. In this case, the comparison described in paragraph (b) of this section must be based on the total VAR-based figure for the specific risk of debt and equity positions, taking into account any correlations that are built into the model.

(b) *VAR-based specific risk capital charge.* In all cases where a bank measures specific risk in its internal model, the total capital charge for specific risk (i.e., the VAR-based specific risk capital charge plus the specific risk add-on) must equal at least 50 percent of the standard specific risk capital charge (this amount is the minimum specific risk charge).

(1) If the portion of a bank's VAR measure that is attributable to specific risk (multiplied by the bank's multiplication factor if required in section 3(a)(2) of this appendix) is greater than or equal to the minimum specific risk charge, then the bank has no specific risk add-on and its capital charge for specific risk is the portion included in the VAR measure.

(2) If the portion of a bank's VAR measure that is attributable to specific risk (multiplied by the bank's multiplication factor if required in section 3(a)(2) of this appendix) is less than the minimum specific risk charge, then the bank's specific risk add-on is the difference between the minimum specific risk charge and the specific risk portion of the VAR measure (multiplied by the bank's multiplication factor if required in section 3(a)(2) of this appendix).

(c) *Standard specific risk capital charge.* The standard specific risk capital charge equals the sum of the components for covered debt and equity positions as follows:

(1) Covered debt positions. (i) For purposes of this section 5, covered debt positions means fixed-rate or floating-rate debt instruments located in the trading account and instruments located in the trading account with values that react primarily to changes in interest rates, including certain non-convertible preferred stock, convertible bonds, and instruments subject to repurchase and lending agreements. Also included are derivatives (including written and purchased options) for which the underlying instrument is a covered debt instrument that is subject to a non-zero specific risk capital charge.

(A) For covered debt positions that are derivatives, a bank must risk-weight (as

[10] A bank's internal model may use any generally accepted measurement techniques, such as variance-covariance models, historical simulations, or Monte Carlo simulations. However, the level of sophistication and accuracy of a bank's internal model must be commensurate with the nature and size of its covered positions. A bank that modifies its existing modeling procedures to comply with the requirements of this appendix for risk-based capital purposes should, nonetheless, continue to use the internal model it considers most appropriate in evaluating risks for other purposes.

[11] Stress tests provide information about the impact of adverse market events on a bank's covered positions. Backtests provide information about the accuracy of an internal model by comparing a bank's daily VAR measures to its corresponding daily trading profits and losses.

[12] For material exposures in the major currencies and markets, modeling techniques must capture spread risk and must incorporate enough segments of the yield curve—at least six—to capture differences in volatility and less than perfect correlation of rates along the yield curve.

[13] Actual net trading profits and losses typically include such things as realized and unrealized gains and losses on portfolio positions as well as fee income and commissions associated with trading activities.

described in paragraph (c)(1)(iii) of this section) the market value of the effective notional amount of the underlying debt instrument or index portfolio. Swaps must be included as the notional position in the underlying debt instrument or index portfolio, with a receiving side treated as a long position and a paying side treated as a short position; and

(B) For covered debt positions that are options, whether long or short, a bank must risk-weight (as described in paragraph (c)(1)(iii) of this section) the market value of the effective notional amount of the underlying debt instrument or index multiplied by the option's delta.

(ii) A bank may net long and short covered debt positions (including derivatives) in identical debt issues or indices.

(iii) A bank must multiply the absolute value of the current market value of each net long or short covered debt position by the appropriate specific risk weighting factor indicated in Table 2 of this appendix. The specific risk capital charge component for covered debt positions is the sum of the weighted values.

TABLE 2—SPECIFIC RISK WEIGHTING FACTORS FOR COVERED DEBT POSITIONS

Category	Remaining maturity (contractual)	Weighting factor (in percent)
Government [1]	N/A	0.00
Qualifying [2]	6 months or less	0.25
	Over 6 months to 24 months.	1.00
	Over 24 months	1.60
Other [3]	N/A	8.00

[1] The "government" category includes all debt instruments of central governments of OECD countries (as defined in appendix A of this part) including bonds, Treasury bills, and other short-term instruments, as well as local currency instruments of non-OECD central governments to the extent the bank has liabilities booked in that currency.

[2] The "qualifying" category includes debt instruments of U.S. government-sponsored agencies (as defined in appendix A of this part), general obligation debt instruments issued by states and other political subdivisions of OECD countries, multilateral development banks (as defined in appendix A of this part), and debt instruments issued by U.S. depository institutions or OECD-banks (as defined in appendix A of this part) that do not qualify as capital of the issuing institution. This category also includes other debt instruments, including corporate debt and revenue instruments issued by states and other political subdivisions of OECD countries, that are: (1) Rated investment grade by at least two nationally recognized credit rating services; (2) rated investment grade by one nationally recognized credit rating agency and not rated less than investment grade by any other credit rating agency; or (3) unrated, but deemed to be of comparable investment quality by the reporting bank and the issuer has instruments listed on a recognized stock exchange, subject to review by the OCC.

[3] The "other" category includes debt instruments that are not included in the government or qualifying categories.

(2) *Covered equity positions.* (i) For purposes of this section 5, covered equity positions means equity instruments located in the trading account and instruments located in the trading account with values that react primarily to changes in equity prices, including voting or non-voting common stock, certain convertible bonds, and commitments to buy or sell equity instruments. Also included are derivatives (including written and purchased options) for which the underlying is a covered equity position.

(A) For covered equity positions that are derivatives, a bank must risk weight (as described in paragraph (c)(2)(iii) of this section) the market value of the effective notional amount of the underlying equity instrument or equity portfolio. Swaps must be included as the notional position in the underlying equity instrument or index portfolio, with a receiving side treated as a long position and a paying side treated as a short position; and

(B) For covered equity positions that are options, whether long or short, a bank must risk weight (as described in paragraph (c)(2)(iii) of this section) the market value of the effective notional amount of the underlying equity instrument or index multiplied by the option's delta.

(ii) A bank may net long and short covered equity positions (including derivatives) in identical equity issues or equity indices in the same market.[14]

(iii)(A) A bank must multiply the absolute value of the current market value of each net long or short covered equity position by a risk weighting factor of 8.0 percent, or by 4.0 percent if the equity is held in a portfolio that is both liquid and well-diversified.[15] For covered equity positions that are index contracts comprising a well-diversified portfolio of equity instruments, the net long or short position is multiplied by a risk weighting factor of 2.0 percent.

(B) For covered equity positions from the following futures-related arbitrage strategies, a bank may apply a 2.0 percent risk weighting factor to one side (long or short) of each position with the opposite side exempt from charge:

[14] A bank may also net positions in depository receipts against an opposite position in the underlying equity or identical equity in different markets, provided that the bank includes the costs of conversion.

[15] A portfolio is liquid and well-diversified if: (1) It is characterized by a limited sensitivity to price changes of any single equity issue or closely related group of equity issues held in the portfolio; (2) the volatility of the portfolio's value is not dominated by the volatility of any individual equity issue or by equity issues from any single industry or economic sector; (3) it contains a large number of individual equity positions, with no single position representing a substantial portion of the portfolio's total market value; and (4) it consists mainly of issues traded on organized exchanges or in well-established over-the-counter markets.

(*1*) Long and short positions in exactly the same index at different dates or in different market centers; or

(*2*) Long and short positions in index contracts at the same date in different but similar indices.

(C) For futures contracts on broadly-based indices that are matched by offsetting positions in a basket of stocks comprising the index, a bank may apply a 2.0 percent risk weighting factor to the futures and stock basket positions (long and short), provided that such trades are deliberately entered into and separately controlled, and that the basket of stocks comprises at least 90 percent of the capitalization of the index.

(iv) The specific risk capital charge component for covered equity positions is the sum of the weighted values.

Section 6. Reservation of Authority

The OCC reserves the authority to modify the application of any of the provisions in this appendix to any bank, upon reasonable justification.

Dated: August 6, 1996.

Eugene A. Ludwig,

Comptroller of the Currency.

Federal Reserve System

12 CFR CHAPTER II

For the reasons set out in the joint preamble, parts 208 and 225 of title 12 of chapter II of the Code of Federal Regulations are amended as follows:

PART 208—MEMBERSHIP OF STATE BANKING INSTITUTIONS IN THE FEDERAL RESERVE SYSTEM (REGULATION H)

1. The authority citation for part 208 is revised to read as follows:

Authority: 12 U.S.C. 36, 248(a), 248(c), 321–338a, 371d, 461, 481–486, 601, 611, 1814, 1823(j), 1828(o), 1831o, 1831p–1, 3105, 3310, 3331–3351, and 3906–3909; 15 U.S.C. 78b, 78l(b), 78l(g), 78l(i), 78o–4(c)(5), 78q, 78q–1, and 78w; 31 U.S.C. 5318; 42 U.S.C. 4012a, 4104a, 4104b, 4106, and 4128.

2. Section 208.13 is revised to read as follows:

§ 208.13 Capital Adequacy.

The standards and guidelines by which the capital adequacy of state member banks will be evaluated by the Board are set forth in appendix A and appendix E for risk-based capital purposes, and, with respect to the ratios relating capital to total assets, in appendix B to part 208 and in appendix B to the Board's Regulation Y, 12 CFR part 225.

3. Appendix A is amended in the introductory text by adding a new paragraph after the second undesignated paragraph to read as follows:

Appendix A to Part 208—Capital Adequacy Guidelines for State Member Banks; Risk Based Measure

* * * * *

In addition, when certain banks that engage in trading activities calculate their risk-based capital ratio under this appendix A, they must also refer to appendix E of this part, which incorporates capital charges for certain market risks into the risk-based capital ratio. When calculating their risk-based capital ratio under this appendix A, such banks are required to refer to appendix E of this part for supplemental rules to determine qualifying and excess capital, calculate risk-weighted assets, calculate market risk equivalent assets, and calculate risk-based capital ratios adjusted for market risk.

* * * * *

4. A new appendix E is added to read as follows:

Appendix E to Part 208—Capital Adequacy Guidelines for State Member Banks; Market Risk Measure

Section 1. Purpose, Applicability, Scope, and Effective Date

(a) *Purpose.* The purpose of this appendix is to ensure that banks with significant exposure to market risk maintain adequate capital to support that exposure.[1] This appendix supplements and adjusts the risk-based capital ratio calculations under appendix A of this part with respect to those banks.

(b) *Applicability.* (1) This appendix applies to any insured state member bank whose trading activity[2] (on a worldwide consolidated basis) equals:

(i) 10 percent or more of total assets;[3] or

(ii) $1 billion or more.

(2) The Federal Reserve may additionally apply this appendix to any insured state member bank if the Federal Reserve deems it necessary or appropriate for safe and sound banking practices.

(3) The Federal Reserve may exclude an insured state member bank otherwise meeting the criteria of paragraph (b)(1) of this section from coverage under this appendix if it determines the bank meets such criteria as a consequence of accounting, operational, or similar considerations, and the Federal Reserve deems it consistent with safe and sound banking practices.

(c) *Scope.* The capital requirements of this appendix support market risk associated with a bank's covered positions.

(d) *Effective date.* This appendix is effective as of January 1, 1997. Compliance is not mandatory until January 1, 1998. Subject to supervisory approval, a bank may opt to comply with this appendix as early as January 1, 1997.[4]

Section 2. Definitions

For purposes of this appendix, the following definitions apply:

(a) *Covered positions* means all positions in a bank's trading account, and all foreign exchange[5] and commodity positions, whether or not in the trading account.[6] Positions include on-balance-sheet assets and liabilities and off-balance-sheet items. Securities subject to repurchase and lending agreements are included as if they are still owned by the lender.

(b) *Market risk* means the risk of loss resulting from movements in market prices. Market risk consists of general market risk and specific risk components.

(1) *General market risk* means changes in the market value of covered positions resulting from broad market movements, such as changes in the general level of interest rates, equity prices, foreign exchange rates, or commodity prices.

(2) *Specific risk* means changes in the market value of specific positions due to factors other than broad market movements and includes such risk as the credit risk of an instrument's issuer.

(c) *Tier 1* and *Tier 2 capital* are defined in appendix A of this part.

(d) *Tier 3 capital* is subordinated debt that is unsecured; is fully paid up; has an original maturity of at least two years; is not redeemable before maturity without prior approval by the Federal Reserve; includes a lock-in clause precluding payment of either interest or principal (even at maturity) if the payment would cause the issuing bank's risk-based capital ratio to fall or remain below the minimum required under appendix A of this part; and does not contain and is not covered by any covenants, terms, or restrictions that are inconsistent with safe and sound banking practices.

(e) *Value-at-risk (VAR)* means the estimate of the maximum amount that the value of covered positions could decline during a fixed holding period within a stated confidence level, measured in accordance with section 4 of this appendix.

Section 3. Adjustments to the Risk-Based Capital Ratio Calculations

(a) *Risk-based capital ratio denominator.* A bank subject to this appendix shall calculate its risk-based capital ratio denominator as follows:

(1) *Adjusted risk-weighted assets.* Calculate adjusted risk-weighted assets, which equals risk-weighted assets (as determined in accordance with appendix A of this part), excluding the risk-weighted amounts of all covered positions (except foreign exchange positions outside the trading account and over-the-counter derivative positions).[7]

(2) *Measure for market risk.* Calculate the measure for market risk, which equals the sum of the VAR-based capital charge, the specific risk add-on (if any), and the capital charge for de minimis exposures (if any).

(i) *VAR-based capital charge.* The VAR-based capital charge equals the higher of:

(A) The previous day's VAR measure; or

(B) The average of the daily VAR measures for each of the preceding 60 business days multiplied by three, except as provided in section 4(e) of this appendix;

(ii) *Specific risk add-on.* The specific risk add-on is calculated in accordance with section 5 of this appendix; and

(iii) *Capital charge for de minimis exposure.* The capital charge for de minimis exposure is calculated in accordance with section 4(a) of this appendix.

(3) *Market risk equivalent assets.* Calculate market risk equivalent assets by multiplying the measure for market risk (as calculated in paragraph (a)(2) of this section) by 12.5.

(4) *Denominator calculation.* Add market risk equivalent assets (as calculated in paragraph (a)(3) of this section) to adjusted risk-weighted assets (as calculated in paragraph (a)(1) of this section). The resulting sum is the bank's risk-based capital ratio denominator.

(b) *Risk-based capital ratio numerator.* A bank subject to this appendix shall calculate its risk-based capital ratio numerator by allocating capital as follows:

(1) *Credit risk allocation.* Allocate Tier 1 and Tier 2 capital equal to 8.0 percent of adjusted risk-weighted assets (as calculated in paragraph (a)(1) of this section).[8]

(2) *Market risk allocation.* Allocate Tier 1, Tier 2, and Tier 3 capital equal to the measure for market risk as calculated in paragraph (a)(2) of this section. The sum of Tier 2 and Tier 3 capital allocated for market risk must not exceed 250 percent of Tier 1 capital allocated for market risk. (This requirement means that Tier 1 capital allocated in this paragraph (b)(2) must equal at least 28.6 percent of the measure for market risk.)

(3) *Restrictions.* (i) The sum of Tier 2 capital (both allocated and excess) and Tier 3 capital (allocated in paragraph (b)(2) of this section) may not exceed 100 percent of Tier 1 capital (both allocated and excess).[9]

(ii) Term subordinated debt (and intermediate-term preferred stock and related

---

[1] This appendix is based on a framework developed jointly by supervisory authorities from the countries represented on the Basle Committee on Banking Supervision and endorsed by the Group of Ten Central Bank Governors. The framework is described in a Basle Committee paper entitled ''Amendment to the Capital Accord to Incorporate Market Risk,'' January 1996.

[2] Trading activity means the gross sum of trading assets and liabilities as reported in the bank's most recent quarterly Consolidated Report of Condition and Income (Call Report).

[3] Total assets means quarter-end total assets as reported in the bank's most recent Call Report.

[4] A bank that voluntarily complies with the final rule prior to January 1, 1998, must comply with all of its provisions.

[5] Subject to supervisory review, a bank may exclude structural positions in foreign currencies from its covered positions.

[6] The term trading account is defined in the instructions to the Call Report.

[7] Foreign exchange positions outside the trading account and all over-the-counter derivative positions, whether or not in the trading account, must be included in adjusted risk weighted assets as determined in appendix A of this part.

[8] A bank may not allocate Tier 3 capital to support credit risk (as calculated under appendix A of this part).

[9] Excess Tier 1 capital means Tier 1 capital that has not been allocated in paragraphs (b)(1) and (b)(2) of this section. Excess Tier 2 capital means Tier 2 capital that has not been allocated in paragraph (b)(1) and (b)(2) of this section, subject to the restrictions in paragraph (b)(3) of this section.

surplus) included in Tier 2 capital (both allocated and excess) may not exceed 50 percent of Tier 1 capital (both allocated and excess).

(4) *Numerator calculation.* Add Tier 1 capital (both allocated and excess), Tier 2 capital (both allocated and excess), and Tier 3 capital (allocated under paragraph (b)(2) of this section). The resulting sum is the bank's risk-based capital ratio numerator.

Section 4. Internal Models.

(a) *General.* For risk-based capital purposes, a bank subject to this appendix must use its internal model to measure its daily VAR, in accordance with the requirements of this section.[10] The Federal Reserve may permit a bank to use alternative techniques to measure the market risk of de minimis exposures so long as the techniques adequately measure associated market risk.

(b) *Qualitative requirements.* A bank subject to this appendix must have a risk management system that meets the following minimum qualitative requirements:

(1) The bank must have a risk control unit that reports directly to senior management and is independent from business trading units.

(2) The bank's internal risk measurement model must be integrated into the daily management process.

(3) The bank's policies and procedures must identify, and the bank must conduct, appropriate stress tests and backtests.[11] The bank's policies and procedures must identify the procedures to follow in response to the results of such tests.

(4) The bank must conduct independent reviews of its risk measurement and risk management systems at least annually.

(c) *Market risk factors.* The bank's internal model must use risk factors sufficient to measure the market risk inherent in all covered positions. The risk factors must address interest rate risk,[12] equity price risk, foreign exchange rate risk, and commodity price risk.

(d) *Quantitative requirements.* For regulatory capital purposes, VAR measures must meet the following quantitative requirements:

(1) The VAR measures must be calculated on a daily basis using a 99 percent, one-tailed confidence level with a price shock equivalent to a ten-business day movement in rates and prices. In order to calculate VAR measures based on a ten-day price shock, the bank may either calculate ten-day figures directly or convert VAR figures based on holding periods other than ten days to the equivalent of a ten-day holding period (for instance, by multiplying a one-day VAR measure by the square root of ten).

(2) The VAR measures must be based on an historical observation period (or effective observation period for a bank using a weighting scheme or other similar method) of at least one year. The bank must update data sets at least once every three months or more frequently as market conditions warrant.

(3) The VAR measures must include the risks arising from the non-linear price characteristics of options positions and the sensitivity of the market value of the positions to changes in the volatility of the underlying rates or prices. A bank with a large or complex options portfolio must measure the volatility of options positions by different maturities.

(4) The VAR measures may incorporate empirical correlations within and across risk categories, provided that the bank's process for measuring correlations is sound. In the event that the VAR measures do not incorporate empirical correlations across risk categories, then the bank must add the separate VAR measures for the four major risk categories to determine its aggregate VAR measure.

(e) *Backtesting.* (1) Beginning one year after a bank starts to comply with this appendix, a bank must conduct backtesting by comparing each of its most recent 250 business days' actual net trading profit or loss[13] with the corresponding daily VAR measures generated for internal risk measurement purposes and calibrated to a one-day holding period and a 99 percent, one-tailed confidence level.

(2) Once each quarter, the bank must identify the number of exceptions, that is, the number of business days for which the magnitude of the actual daily net trading loss, if any, exceeds the corresponding daily VAR measure.

(3) A bank must use the multiplication factor indicated in Table 1 of this appendix in determining its capital charge for market risk under section 3(a)(2)(i)(B) of this appendix until it obtains the next quarter's backtesting results, unless the Federal Reserve determines that a different adjustment or other action is appropriate.

TABLE 1.—MULTIPLICATION FACTOR BASED ON RESULTS OF BACKTESTING

Number of exceptions	Multiplication factor
4 or fewer	3.00
5	3.40
6	3.50

TABLE 1.—MULTIPLICATION FACTOR BASED ON RESULTS OF BACKTESTING—Continued

Number of exceptions	Multiplication factor
7	3.65
8	3.75
9	3.85
10 or more	4.00

Section 5. Specific Risk

(a) *Specific risk add-on.* For purposes of section 3(a)(2)(ii) of this appendix, a bank's specific risk add-on equals the standard specific risk capital charge calculated under paragraph (c) of this section. If, however, a bank can demonstrate to the Federal Reserve that its internal model measures the specific risk of covered debt and/or equity positions and that those measures are included in the VAR-based capital charge in section 3(a)(2)(i) of this appendix, then the bank may reduce or eliminate its specific risk add-on under this section. The determination as to whether a model incorporates specific risk must be made separately for covered debt and equity positions.

(1) If a model includes the specific risk of covered debt positions but not covered equity positions (or vice versa), then the bank can reduce its specific risk charge for the included positions under paragraph (b) of this section. The specific risk charge for the positions not included equals the standard specific risk capital charge under paragraph (c) of this section.

(2) If a model addresses the specific risk of both covered debt and equity positions, then the bank can reduce its specific risk charge for both covered debt and equity positions under paragraph (b) of this section. In this case, the comparison described in paragraph (b) of this section must be based on the total VAR-based figure for the specific risk of debt and equity positions, taking into account any correlations that are built into the model.

(b) *VAR-based specific risk capital charge.* In all cases where a bank measures specific risk in its internal model, the total capital charge for specific risk (i.e., the VAR-based specific risk capital charge plus the specific risk add-on) must equal at least 50 percent of the standard specific risk capital charge (this amount is the minimum specific risk charge).

(1) If the portion of a bank's VAR measure that is attributable to specific risk (multiplied by the bank's multiplication factor if required in section 3(a)(2) of this appendix) is greater than or equal to the minimum specific risk charge, then the bank has no specific risk add-on and its capital charge for specific risk is the portion included in the VAR measure.

(2) If the portion of a bank's VAR measure that is attributable to specific risk (multiplied by the bank's multiplication factor if required in section 3(a)(2) of this appendix) is less than the minimum specific risk charge, then the bank's specific risk add-on is the difference between the minimum specific risk charge and the specific risk portion of the VAR measure (multiplied by the bank's multiplication factor if required in section 3(a)(2) of this appendix).

[10] A bank's internal model may use any generally accepted measurement techniques, such as variance-covariance models, historical simulations, or Monte Carlo simulations. However, the level of sophistication and accuracy of a bank's internal model must be commensurate with the nature and size of its covered positions. A bank that modifies its existing modeling procedures to comply with the requirements of this appendix for risk-based capital purposes should, nonetheless, continue to use the internal model it considers most appropriate in evaluating risks for other purposes.

[11] Stress tests provide information about the impact of adverse market events on a bank's covered positions. Backtests provide information about the accuracy of an internal model by comparing a bank's daily VAR measures to its corresponding daily trading profits and losses.

[12] For material exposures in the major currencies and markets, modeling techniques must capture spread risk and must incorporate enough segments of the yield curve—at least six—to capture differences in volatility and less than perfect correlation of rates along the yield curve.

[13] Actual net trading profits and losses typically include such things as realized and unrealized gains and losses on portfolio positions as well as fee income and commissions associated with trading activities.

(c) *Standard specific risk capital charge.* The standard specific risk capital charge equals the sum of the components for covered debt and equity positions as follows:

(1) *Covered debt positions.* (i) For purposes of this section 5, covered debt positions means fixed-rate or floating-rate debt instruments located in the trading account and instruments located in the trading account with values that react primarily to changes in interest rates, including certain non-convertible preferred stock, convertible bonds, and instruments subject to repurchase and lending agreements. Also included are derivatives (including written and purchased options) for which the underlying instrument is a covered debt instrument that is subject to a non-zero specific risk capital charge.

(A) For covered debt positions that are derivatives, a bank must risk-weight (as described in paragraph (c)(1)(iii) of this section) the market value of the effective notional amount of the underlying debt instrument or index portfolio. Swaps must be included as the notional position in the underlying debt instrument or index portfolio, with a receiving side treated as a long position and a paying side treated as a short position; and

(B) For covered debt positions that are options, whether long or short, a bank must risk-weight (as described in paragraph (c)(1)(iii) of this section) the market value of the effective notional amount of the underlying debt instrument or index multiplied by the option's delta.

(ii) A bank may net long and short covered debt positions (including derivatives) in identical debt issues or indices.

(iii) A bank must multiply the absolute value of the current market value of each net long or short covered debt position by the appropriate specific risk weighting factor indicated in Table 2 of this appendix. The specific risk capital charge component for covered debt positions is the sum of the weighted values.

TABLE 2.—SPECIFIC RISK WEIGHTING FACTORS FOR COVERED DEBT POSITIONS

Category	Remaining maturity (contractual)	Weighting factor (in percent)
Government	N/A	0.00
Qualifying	6 months or less	0.25
	Over 6 months to 24 months.	1.00
	Over 24 months	1.60
Other	N/A	8.00

(A) The *government* category includes all debt instruments of central governments of OECD-based countries [14] including bonds, Treasury bills, and other short-term instruments, as well as local currency instruments of non-OECD central governments to the extent the bank has liabilities booked in that currency.

(B) The *qualifying* category includes debt instruments of U.S. government-sponsored agencies, general obligation debt instruments issued by states and other political subdivisions of OECD-based countries, multilateral development banks, and debt instruments issued by U.S. depository institutions or OECD-banks that do not qualify as capital of the issuing institution.[15] This category also includes other debt instruments, including corporate debt and revenue instruments issued by states and other political subdivisions of OECD countries, that are:

(*1*) Rated investment-grade by at least two nationally recognized credit rating services;

(*2*) Rated investment-grade by one nationally recognized credit rating agency and not rated less than investment-grade by any other credit rating agency; or

(*3*) Unrated, but deemed to be of comparable investment quality by the reporting bank and the issuer has instruments listed on a recognized stock exchange, subject to review by the Federal Reserve.

(C) The *other* category includes debt instruments that are not included in the government or qualifying categories.

(2) *Covered equity positions.* (i) For purposes of this section 5, covered equity positions means equity instruments located in the trading account and instruments located in the trading account with values that react primarily to changes in equity prices, including voting or non-voting common stock, certain convertible bonds, and commitments to buy or sell equity instruments. Also included are derivatives (including written and purchased options) for which the underlying is a covered equity position.

(A) For covered equity positions that are derivatives, a bank must risk weight (as described in paragraph (c)(2)(iii) of this section) the market value of the effective notional amount of the underlying equity instrument or equity portfolio. Swaps must be included as the notional position in the underlying equity instrument or index portfolio, with a receiving side treated as a long position and a paying side treated as a short position; and

(B) For covered equity positions that are options, whether long or short, a bank must risk weight (as described in paragraph (c)(2)(iii) of this section) the market value of the effective notional amount of the underlying equity instrument or index multiplied by the option's delta.

(ii) A bank may net long and short covered equity positions (including derivatives) in identical equity issues or equity indices in the same market.[16]

(iii)(A) A bank must multiply the absolute value of the current market value of each net long or short covered equity position by a risk weighting factor of 8.0 percent, or by 4.0 percent if the equity is held in a portfolio that is both liquid and well-diversified.[17] For covered equity positions that are index contracts comprising a well-diversified portfolio of equity instruments, the net long or short position is multiplied by a risk weighting factor of 2.0 percent.

(B) For covered equity positions from the following futures-related arbitrage strategies, a bank may apply a 2.0 percent risk weighting factor to one side (long or short) of each position with the opposite side exempt from charge, subject to review by the Federal Reserve:

(*1*) Long and short positions in exactly the same index at different dates or in different market centers; or

(*2*) Long and short positions in index contracts at the same date in different but similar indices.

(C) For futures contracts on broadly-based indices that are matched by offsetting positions in a basket of stocks comprising the index, a bank may apply a 2.0 percent risk weighting factor to the futures and stock basket positions (long and short), provided that such trades are deliberately entered into and separately controlled, and that the basket of stocks comprises at least 90 percent of the capitalization of the index.

(iv) The specific risk capital charge component for covered equity positions is the sum of the weighted values.

PART 225—BANK HOLDING COMPANIES AND CHANGE IN BANK CONTROL (REGULATION Y)

1. The authority citation for part 225 continues to read as follows:

Authority: 12 U.S.C. 1817(j)(13), 1818, 1831i, 1831p–1, 1843(c)(8), 1844(b), 1972(l), 3106, 3108, 3310, 3331–3351, 3907, and 3909.

2. Appendix A is amended in the introductory text, by adding a new paragraph after the second undesignated paragraph to read as follows:

Appendix A to Part 225—Capital Adequacy Guidelines for Bank Holding Companies: Risk-Based Measure

* * * * *

In addition, when certain organizations that engage in trading activities calculate their risk-based capital ratio under this appendix A, they must also refer to appendix E of this part, which incorporates capital charges for certain market risks into the risk-based capital ratio. When calculating their risk-based capital ratio under this appendix A, such organizations are required to refer to

[14] Organization for Economic Cooperation and Development (OECD)-based countries is defined in appendix A of this part.

[15] U.S. government-sponsored agencies, multilateral development banks, and OECD banks are defined in appendix A of this part.

[16] A bank may also net positions in depository receipts against an opposite position in the underlying equity or identical equity in different markets, provided that the bank includes the costs of conversion.

[17] A portfolio is liquid and well-diversified if: (1) It is characterized by a limited sensitivity to price changes of any single equity issue or closely related group of equity issues held in the portfolio; (2) the volatility of the portfolio's value is not dominated by the volatility of any individual equity issue or by equity issues from any single industry or economic sector; (3) it contains a large number of individual equity positions, with no single position representing a substantial portion of the portfolio's total market value; and (4) it consists mainly of issues traded on organized exchanges or in well-established over-the-counter markets.

appendix E of this part for supplemental rules to determine qualifying and excess capital, calculate risk-weighted assets, calculate market risk equivalent assets, and calculate risk-based capital ratios adjusted for market risk.

* * * * *

3. A new appendix E is added to read as follows:

Appendix E to Part 225—Capital Adequacy Guidelines for Bank Holding Companies: Market Risk Measure

Section 1. Purpose, Applicability, Scope, and Effective Date

(a) *Purpose.* The purpose of this appendix is to ensure that bank holding companies (organizations) with significant exposure to market risk maintain adequate capital to support that exposure.[1] This appendix supplements and adjusts the risk-based capital ratio calculations under appendix A of this part with respect to those organizations.

(b) *Applicability.* (1) This appendix applies to any bank holding company whose trading activity[2] (on a worldwide consolidated basis) equals:

(i) 10 percent or more of total assets;[3] or

(ii) $1 billion or more.

(2) The Federal Reserve may additionally apply this appendix to any bank holding company if the Federal Reserve deems it necessary or appropriate for safe and sound banking practices.

(3) The Federal Reserve may exclude a bank holding company otherwise meeting the criteria of paragraph (b)(1) of this section from coverage under this appendix if it determines the organization meets such criteria as a consequence of accounting, operational, or similar considerations, and the Federal Reserve deems it consistent with safe and sound banking practices.

(c) *Scope.* The capital requirements of this appendix support market risk associated with an organization's covered positions.

(d) *Effective date.* This appendix is effective as of January 1, 1997. Compliance is not mandatory until January 1, 1998. Subject to supervisory approval, a bank holding company may opt to comply with this appendix as early as January 1, 1997.[4]

Section 2. Definitions

For purposes of this appendix, the following definitions apply:

(a) *Covered positions* means all positions in an organization's trading account, and all foreign exchange[5] and commodity positions, whether or not in the trading account.[6] Positions include on-balance-sheet assets and liabilities and off-balance-sheet items. Securities subject to repurchase and lending agreements are included as if still owned by the lender.

(b) *Market risk* means the risk of loss resulting from movements in market prices. Market risk consists of general market risk and specific risk components.

(1) *General market risk* means changes in the market value of covered positions resulting from broad market movements, such as changes in the general level of interest rates, equity prices, foreign exchange rates, or commodity prices.

(2) *Specific risk* means changes in the market value of specific positions due to factors other than broad market movements and includes such risk as the credit risk of an instrument's issuer.

(c) *Tier 1* and *Tier 2 capital* are defined in appendix A of this part.

(d) *Tier 3 capital* is subordinated debt that is unsecured; is fully paid up; has an original maturity of at least two years; is not redeemable before maturity without prior approval by the Federal Reserve; includes a lock-in clause precluding payment of either interest or principal (even at maturity) if the payment would cause the issuing organization's risk-based capital ratio to fall or remain below the minimum required under appendix A of this part; and does not contain and is not covered by any covenants, terms, or restrictions that are inconsistent with safe and sound banking practices.

(e) *Value-at-risk (VAR)* means the estimate of the maximum amount that the value of covered positions could decline due to market price or rate movements during a fixed holding period within a stated confidence level, measured in accordance with section 4 of this appendix.

Section 3. Adjustments to the Risk-Based Capital Ratio Calculations

(a) *Risk-based capital ratio denominator.* An organization subject to this appendix shall calculate its risk-based capital ratio denominator as follows:

(1) *Adjusted risk-weighted assets.* Calculate adjusted risk-weighted assets, which equals risk-weighted assets (as determined in accordance with appendix A of this part) excluding the risk-weighted amounts of all covered positions (except foreign exchange positions outside the trading account and over-the-counter derivative positions).[7]

(2) *Measure for market risk.* Calculate the measure for market risk, which equals the sum of the VAR-based capital charge, the specific risk add-on (if any), and the capital charge for de minimis exposures (if any).

(i) *VAR-based capital charge.* The VAR-based capital charge equals the higher of:

(A) The previous day's VAR measure; or

(B) The average of the daily VAR measures for each of the preceding 60 business days multiplied by three, except as provided in section 4(e) of this appendix;

(ii) *Specific risk add-on.* The specific risk add-on is calculated in accordance with section 5 of this appendix; and

(iii) *Capital charge for de minimis exposure.* The capital charge for de minimis exposure is calculated in accordance with section 4(a) of this appendix.

(3) *Market risk equivalent assets.* Calculate market risk equivalent assets by multiplying the measure for market risk (as calculated in paragraph (a)(2) of this section) by 12.5.

(4) *Denominator calculation.* Add market risk equivalent assets (as calculated in paragraph (a)(3) of this section) to adjusted risk-weighted assets (as calculated in paragraph (a)(1) of this section). The resulting sum is the organization's risk-based capital ratio denominator.

(b) *Risk-based capital ratio numerator.* An organization subject to this appendix shall calculate its risk-based capital ratio numerator by allocating capital as follows:

(1) *Credit risk allocation.* Allocate Tier 1 and Tier 2 capital equal to 8.0 percent of adjusted risk-weighted assets (as calculated in paragraph (a)(1) of this section).[8]

(2) *Market risk allocation.* Allocate Tier 1, Tier 2, and Tier 3 capital equal to the measure for market risk as calculated in paragraph (a)(2) of this section. The sum of Tier 2 and Tier 3 capital allocated for market risk must not exceed 250 percent of Tier 1 capital allocated for market risk. (This requirement means that Tier 1 capital allocated in this paragraph (b)(2) must equal at least 28.6 percent of the measure for market risk.)

(3) *Restrictions.* (i) The sum of Tier 2 capital (both allocated and excess) and Tier 3 capital (allocated in paragraph (b)(2) of this section) may not exceed 100 percent of Tier 1 capital (both allocated and excess).[9]

(ii) Term subordinated debt (and intermediate-term preferred stock and related surplus) included in Tier 2 capital (both allocated and excess) may not exceed 50 percent of Tier 1 capital (both allocated and excess).

(4) *Numerator calculation.* Add Tier 1 capital (both allocated and excess), Tier 2 capital (both allocated and excess), and Tier 3 capital (allocated under paragraph (b)(2) of this section). The resulting sum is the organization's risk-based capital ratio numerator.

Section 4. Internal Models

(a) *General.* For risk-based capital purposes, a bank holding company subject to this appendix must use its internal model to measure its daily VAR, in accordance with

---

[1] This appendix is based on a framework developed jointly by supervisory authorities from the countries represented on the Basle Committee on Banking Supervision and endorsed by the Group of Ten Central Bank Governors. The framework is described in a Basle Committee paper entitled ''Amendment to the Capital Accord to Incorporate Market Risk,'' January 1996.

[2] Trading activity means the gross sum of trading assets and liabilities as reported in the bank holding company's most recent quarterly Y–9C Report.

[3] Total assets means quarter-end total assets as reported in the bank holding company's most recent Y–9C Report.

[4] A bank holding company that voluntarily complies with the final rule prior to January 1, 1998, must comply with all of its provisions.

[5] Subject to supervisory review, a bank may exclude structural positions in foreign currencies from its covered positions.

[6] The term trading account is defined in the instructions to the Call Report.

[7] Foreign exchange positions outside the trading account and all over-the-counter derivative positions, whether or not in the trading account, must be included in adjusted risk weighted assets as determined in appendix A of this part.

[8] An institution may not allocate Tier 3 capital to support credit risk (as calculated under appendix A of this part).

[9] Excess Tier 1 capital means Tier 1 capital that has not been allocated in paragraphs (b)(1) and (b)(2) of this section. Excess Tier 2 capital means Tier 2 capital that has not been allocated in paragraph (b)(1) and (b)(2) of this section, subject to the restrictions in paragraph (b)(3) of this section.

the requirements of this section.[10] The Federal Reserve may permit an organization to use alternative techniques to measure the market risk of de minimis exposures so long as the techniques adequately measure associated market risk.

(b) *Qualitative requirements.* A bank holding company subject to this appendix must have a risk management system that meets the following minimum qualitative requirements:

(1) The organization must have a risk control unit that reports directly to senior management and is independent from business trading units.

(2) The organization's internal risk measurement model must be integrated into the daily management process.

(3) The organization's policies and procedures must identify, and the organization must conduct, appropriate stress tests and backtests.[11] The organization's policies and procedures must identify the procedures to follow in response to the results of such tests.

(4) The organization must conduct independent reviews of its risk measurement and risk management systems at least annually.

(c) *Market risk factors.* The organization's internal model must use risk factors sufficient to measure the market risk inherent in all covered positions. The risk factors must address interest rate risk,[12] equity price risk, foreign exchange rate risk, and commodity price risk.

(d) *Quantitative requirements.* For regulatory capital purposes, VAR measures must meet the following quantitative requirements:

(1) The VAR measures must be calculated on a daily basis using a 99 percent, one-tailed confidence level with a price shock equivalent to a ten-business day movement in rates and prices. In order to calculate VAR measures based on a ten-day price shock, the organization may either calculate ten-day figures directly or convert VAR figures based on holding periods other than ten days to the equivalent of a ten-day holding period (for instance, by multiplying a one-day VAR measure by the square root of ten).

(2) The VAR measures must be based on an historical observation period (or effective observation period for an organization using a weighting scheme or other similar method) of at least one year. The organization must update data sets at least once every three months or more frequently as market conditions warrant.

(3) The VAR measures must include the risks arising from the non-linear price characteristics of options positions and the sensitivity of the market value of the positions to changes in the volatility of the underlying rates or prices. An organization with a large or complex options portfolio must measure the volatility of options positions by different maturities.

(4) The VAR measures may incorporate empirical correlations within and across risk categories, provided that the organization's process for measuring correlations is sound. In the event that the VAR measures do not incorporate empirical correlations across risk categories, then the organization must add the separate VAR measures for the four major risk categories to determine its aggregate VAR measure.

(e) *Backtesting.* (1) Beginning one year after a bank holding company starts to comply with this appendix, it must conduct backtesting by comparing each of its most recent 250 business days' actual net trading profit or loss[13] with the corresponding daily VAR measures generated for internal risk measurement purposes and calibrated to a one-day holding period and a 99th percentile, one-tailed confidence level.

(2) Once each quarter, the organization must identify the number of exceptions, that is, the number of business days for which the magnitude of the actual daily net trading loss, if any, exceeds the corresponding daily VAR measure.

(3) A bank holding company must use the multiplication factor indicated in Table 1 of this appendix in determining its capital charge for market risk under section 3(a)(2)(i)(B) of this appendix until it obtains the next quarter's backtesting results, unless the Federal Reserve determines that a different adjustment or other action is appropriate.

TABLE 1.—MULTIPLICATION FACTOR BASED ON RESULTS OF BACKTESTING

Number of exceptions	Multiplication factor
4 or fewer	3.00
5	3.40
6	3.50
7	3.65
8	3.75
9	3.85
10 or more	4.00

Section 5. Specific Risk

(a) *Specific risk add-on.* For purposes of section 3(a)(2)(ii) of this appendix, a bank holding company's specific risk add-on equals the standard specific risk capital charge calculated under paragraph (c) of this section. If, however, an organization can demonstrate to the Federal Reserve that its internal model measures the specific risk of covered debt and/or equity positions and that those measures are included in the VAR-based capital charge in section 3(a)(2)(i) of this appendix, then it may reduce or eliminate its specific risk add-on under this section. The determination as to whether a model incorporates specific risk must be made separately for covered debt and equity positions.

(1) If a model includes the specific risk of covered debt positions but not covered equity positions (or vice versa), then the organization can reduce its specific risk charge for the included positions under paragraph (b) of this section. The specific risk charge for the positions not included equals the standard specific risk capital charge under paragraph (c) of this section.

(2) If a model addresses the specific risk of both covered debt and equity positions, then the organization can reduce its specific risk charge for both covered debt and equity positions under paragraph (b) of this section. In this case, the comparison described in paragraph (b) of this section must be based on the total VAR-based figure for the specific risk of debt and equity positions, taking account of any correlations that are built into the model.

(b) *VAR-based specific risk capital charge.* In all cases where a bank holding company measures specific risk in its internal model, the total capital charge for specific risk (i.e., the VAR-based specific risk capital charge plus the specific risk add-on) must equal at least 50 percent of the standard specific risk capital charge (this amount is the minimum specific risk charge).

(1) If the portion of an organization's VAR measure that is attributable to specific risk (multiplied by the organization's multiplication factor if required in section 3(a)(2) of this appendix) is greater than or equal to the minimum specific risk charge, then the organization has no specific risk add-on and its capital charge for specific risk is the portion included in the VAR measure.

(2) If the portion of an organization's VAR measure that is attributable to specific risk (multiplied by the organization's multiplication factor if required in section 3(a)(2) of this appendix) is less than the minimum specific risk charge, then the organization's specific risk add-on is the difference between the minimum specific risk charge and the specific risk portion of the VAR measure (multiplied by the multiplication factor if required in section 3(a)(2) of this appendix).

(c) *Standard specific risk capital charge.* The standard specific risk capital charge equals the sum of the components for covered debt and equity positions as follows:

(1) *Covered debt positions.* (i) For purposes of this section 5, covered debt positions means fixed-rate or floating-rate debt instruments located in the trading account or instruments located in the trading account with values that react primarily to changes in interest rates, including certain non-

[10] An organization's internal model may use any generally accepted measurement techniques, such as variance-covariance models, historical simulations, or Monte Carlo simulations. However, the level of sophistication and accuracy of an organization's internal model must be commensurate with the nature and size of its covered positions. An organization that modifies its existing modeling procedures to comply with the requirements of this appendix for risk-based capital purposes should, nonetheless, continue to use the internal model it considers most appropriate in evaluating risks for other purposes.

[11] Stress tests provide information about the impact of adverse market events on a bank's covered positions. Backtests provide information about the accuracy of an internal model by comparing an organization's daily VAR measures to its corresponding daily trading profits and losses.

[12] For material exposures in the major currencies and markets, modeling techniques must capture spread risk and must incorporate enough segments of the yield curve—at least six—to capture differences in volatility and less than perfect correlation of rates along the yield curve.

[13] Actual net trading profits and losses typically include such things as realized and unrealized gains and losses on portfolio positions as well as fee income and commissions associated with trading activities.

convertible preferred stock, convertible bonds, and instruments subject to repurchase and lending agreements. Also included are derivatives (including written and purchased options) for which the underlying instrument is a covered debt instrument that is subject to a non-zero specific risk capital charge.

(A) For covered debt positions that are derivatives, an organization must risk-weight (as described in paragraph (c)(1)(iii) of this section) the market value of the effective notional amount of the underlying debt instrument or index portfolio. Swaps must be included as the notional position in the underlying debt instrument or index portfolio, with a receiving side treated as a long position and a paying side treated as a short position; and

(B) For covered debt positions that are options, whether long or short, an organization must risk-weight (as described in paragraph (c)(1)(iii) of this section) the market value of the effective notional amount of the underlying debt instrument or index multiplied by the option's delta.

(ii) An organization may net long and short covered debt positions (including derivatives) in identical debt issues or indices.

(iii) An organization must multiply the absolute value of the current market value of each net long or short covered debt position by the appropriate specific risk weighting factor indicated in Table 2 of this appendix. The specific risk capital charge component for covered debt positions is the sum of the weighted values.

TABLE 2.—SPECIFIC RISK WEIGHTING FACTORS FOR COVERED DEBT POSITIONS

Category	Remaining maturity (contractual)	Weighting factor (in percent)
Government ...	N/A	0.00
Qualifying	6 months or less	0.25
	Over 6 months to 24 months.	1.00
	Over 24 months	1.60
Other	N/A	8.00

(A) The *government* category includes all debt instruments of central governments of OECD-based countries [14] including bonds, Treasury bills, and other short-term instruments, as well as local currency instruments of non-OECD central governments to the extent the organization has liabilities booked in that currency.

(B) The *qualifying* category includes debt instruments of U.S. government-sponsored agencies, general obligation debt instruments issued by states and other political subdivisions of OECD-based countries, multilateral development banks, and debt instruments issued by U.S. depository institutions or OECD banks that do not qualify as capital of the issuing institution.[15] This category also includes other debt instruments, including corporate debt and revenue instruments issued by states and other political subdivisions of OECD countries, that are:

(*1*) Rated investment-grade by at least two nationally recognized credit rating services;

(*2*) Rated investment grade by one nationally recognized credit rating agency and not rated less than investment grade by any other credit rating agency; or

(*3*) Unrated, but deemed to be of comparable investment quality by the reporting organization and the issuer has instruments listed on a recognized stock exchange, subject to review by the Federal Reserve.

(C) The *other* category includes debt instruments that are not included in the government or qualifying categories.

(2) *Covered equity positions.* (i) For purposes of this section 5, covered equity positions means equity instruments located in the trading account and instruments located in the trading account with values that react primarily to changes in equity prices, including voting or non-voting common stock, certain convertible bonds, and commitments to buy or sell equity instruments. Also included are derivatives (including written or purchased options) for which the underlying is a covered equity position.

(A) For covered equity positions that are derivatives, an organization must risk weight (as described in paragraph (c)(2)(iii) of this section) the market value of the effective notional amount of the underlying equity instrument or equity portfolio. Swaps must be included as the notional position in the underlying equity instrument or index portfolio, with a receiving side treated as a long position and a paying side treated as a short position; and

(B) For covered equity positions that are options, whether long or short, an organization must risk weight (as described in paragraph (c)(2)(iii) of this section) the market value of the effective notional amount of the underlying equity instrument or index multiplied by the option's delta.

(ii) An organization may net long and short covered equity positions (including derivatives) in identical equity issues or equity indices in the same market.[16]

(iii)(A) An organization must multiply the absolute value of the current market value of each net long or short covered equity position by a risk weighting factor of 8.0 percent, or by 4.0 percent if the equity is held in a portfolio that is both liquid and well-diversified.[17] For covered equity positions that are index contracts comprising a well-diversified portfolio of equity instruments, the net long or short position is to be multiplied by a risk weighting factor of 2.0 percent.

(B) For covered equity positions from the following futures-related arbitrage strategies, an organization may apply a 2.0 percent risk weighting factor to one side (long or short) of each equity position with the opposite side exempt from charge, subject to review by the Federal Reserve:

(*1*) Long and short positions in exactly the same index at different dates or in different market centers; or

(*2*) Long and short positions in index contracts at the same date in different but similar indices.

(C) For futures contracts on broadly-based indices that are matched by offsetting positions in a basket of stocks comprising the index, an organization may apply a 2.0 percent risk weighting factor to the futures and stock basket positions (long and short), provided that such trades are deliberately entered into and separately controlled, and that the basket of stocks comprises at least 90 percent of the capitalization of the index.

(iv) The specific risk capital charge component for covered equity positions is the sum of the weighted values.

By order of the Board of Governors of the Federal Reserve System, August 29, 1996.

William W. Wiles,

Secretary of the Board.

Federal Deposit Insurance Corporation

12 CFR CHAPTER III

For the reasons indicated in the preamble, the FDIC Board of Directors hereby amends part 325 of chapter III of title 12 of the Code of Federal Regulations as follows.

PART 325—[AMENDED]

1. The authority citation for part 325 continues to read as follows:

Authority: 12 U.S.C. 1815(a), 1815(b), 1816, 1818(a), 1818(b), 1818(c), 1818(t), 1819(Tenth), 1828(c), 1828(d), 1828(i), 1828(n), 1828(o), 1831o, 3907, 3909, 4808; Pub. L. 102–233, 105 Stat. 1761, 1789, 1790 (12 U.S.C. 1831n note); Pub. L. 102–242, 105 Stat. 2236, 2355, 2386 (12 U.S.C. 1828 note).

2. Appendix A to part 325 is amended in the introductory text, by adding a new paragraph after the third undesignated paragraph to read as follows:

Appendix A to Part 325—Statement of Policy on Risk-Based Capital

* * * * *

In addition, when certain banks that engage in trading activities calculate their risk-based capital ratio under this appendix A, they must also refer to appendix C of this

[14] Organization for Economic Cooperation and Development (OECD)–based countries is defined in appendix A of this part.

[15] U.S. government-sponsored agencies, multilateral development banks, and OECD banks are defined in appendix A of this part.

[16] An organization may also net positions in depository receipts against an opposite position in the underlying equity or identical equity in different markets, provided that the organization includes the costs of conversion.

[17] A portfolio is liquid and well-diversified if: (1) it is characterized by a limited sensitivity to price changes of any single equity issue or closely related group of equity issues held in the portfolio; (2) the volatility of the portfolio's value is not dominated by the volatility of any individual equity issue or by equity issues from any single industry or economic sector; (3) it contains a large number of individual equity positions, with no single position representing a substantial portion of the portfolio's total market value; and (4) it consists mainly of issues traded on organized exchanges or in well-established over-the-counter markets.

part, which incorporates capital charges for certain market risks into the risk-based capital ratio. When calculating their risk-based capital ratio under this appendix A, such banks are required to refer to appendix C of this part for supplemental rules to determine qualifying and excess capital, calculate risk-weighted assets, calculate market risk equivalent assets and add them to risk-weighted assets, and calculate risk-based capital ratios as adjusted for market risk.

* * * * *

3. A new appendix C is added to part 325 to read as follows:

Appendix C to Part 325—Risk-Based Capital for State Non-Member Banks; Market Risk

Section 1. Purpose, Applicability, Scope, and Effective Date

(a) *Purpose.* The purpose of this appendix is to ensure that banks with significant exposure to market risk maintain adequate capital to support that exposure.[1] This appendix supplements and adjusts the risk-based capital ratio calculations under appendix A of this part with respect to those banks.

(b) *Applicability.* (1) This appendix applies to any insured state nonmember bank whose trading activity[2] (on a worldwide consolidated basis) equals:

(i) 10 percent or more of total assets;[3] or

(ii) $1 billion or more.

(2) The FDIC may additionally apply this appendix to any insured state nonmember bank if the FDIC deems it necessary or appropriate for safe and sound banking practices.

(3) The FDIC may exclude an insured state nonmember bank otherwise meeting the criteria of paragraph (b)(1) of this section from coverage under this appendix if it determines the bank meets such criteria as a consequence of accounting, operational, or similar considerations, and the FDIC deems it consistent with safe and sound banking practices.

(c) *Scope.* The capital requirements of this appendix support market risk associated with a bank's covered positions.

(d) *Effective date.* This appendix is effective as of January 1, 1997. Compliance is not mandatory until January 1, 1998. Subject to supervisory approval, a bank may opt to comply with this appendix as early as January 1, 1997.[4]

Section 2. Definitions

For purposes of this appendix, the following definitions apply:

(a) *Covered positions* means all positions in a bank's trading account, and all foreign exchange[5] and commodity positions, whether or not in the trading account.[6] Positions include on-balance-sheet assets and liabilities and off-balance-sheet items. Securities subject to repurchase and lending agreements are included as if they are still owned by the lender.

(b) *Market risk* means the risk of loss resulting from movements in market prices. Market risk consists of general market risk and specific risk components.

(1) *General market risk* means changes in the market value of covered positions resulting from broad market movements, such as changes in the general level of interest rates, equity prices, foreign exchange rates, or commodity prices.

(2) *Specific risk* means changes in the market value of specific positions due to factors other than broad market movements and includes such risk as the credit risk of an instrument's issuer.

(c) *Tier 1* and *Tier 2 capital* are defined in appendix A of this part.

(d) *Tier 3 capital* is subordinated debt that is unsecured; is fully paid up; has an original maturity of at least two years; is not redeemable before maturity without prior approval by the FDIC; includes a lock-in clause precluding payment of either interest or principal (even at maturity) if the payment would cause the issuing bank's risk-based capital ratio to fall or remain below the minimum required under appendix A of this part; and does not contain and is not covered by any covenants, terms, or restrictions that are inconsistent with safe and sound banking practices.

(e) *Value-at-risk (VAR)* means the estimate of the maximum amount that the value of covered positions could decline during a fixed holding period within a stated confidence level, measured in accordance with section 4 of this appendix.

Section 3. Adjustments to the Risk-Based Capital Ratio Calculations.

(a) *Risk-based capital ratio denominator.* A bank subject to this appendix shall calculate its risk-based capital ratio denominator as follows:

(1) *Adjusted risk-weighted assets.* Calculate adjusted risk-weighted assets, which equals risk-weighted assets (as determined in accordance with appendix A of this part), excluding the risk-weighted amounts of all covered positions (except foreign exchange positions outside the trading account and over-the-counter derivative positions).[7]

(2) *Measure for market risk.* Calculate the measure for market risk, which equals the sum of the VAR-based capital charge, the specific risk add-on (if any), and the capital charge for de minimis exposures (if any).

(i) *VAR-based capital charge.* The VAR-based capital charge equals the higher of:

(A) The previous day's VAR measure; or

(B) The average of the daily VAR measures for each of the preceding 60 business days multiplied by three, except as provided in section 4(e) of this appendix;

(ii) *Specific risk add-on.* The specific risk add-on is calculated in accordance with section 5 of this appendix; and

(iii) *Capital charge for de minimis exposure.* The capital charge for de minimis exposure is calculated in accordance with section 4(a) of this appendix.

(3) *Market risk equivalent assets.* Calculate market risk equivalent assets by multiplying the measure for market risk (as calculated in paragraph (a)(2) of this section) by 12.5.

(4) *Denominator calculation.* Add market risk equivalent assets (as calculated in paragraph (a)(3) of this section) to adjusted risk-weighted assets (as calculated in paragraph (a)(1) of this section). The resulting sum is the bank's risk-based capital ratio denominator.

(b) *Risk-based capital ratio numerator.* A bank subject to this appendix shall calculate its risk-based capital ratio numerator by allocating capital as follows:

(1) *Credit risk allocation.* Allocate Tier 1 and Tier 2 capital equal to 8.0 percent of adjusted risk-weighted assets (as calculated in paragraph (a)(1) of this section).[8]

(2) *Market risk allocation.* Allocate Tier 1, Tier 2, and Tier 3 capital equal to the measure for market risk as calculated in paragraph (a)(2) of this section. The sum of Tier 2 and Tier 3 capital allocated for market risk must not exceed 250 percent of Tier 1 capital allocated for market risk. (This requirement means that Tier 1 capital allocated in this paragraph (b)(2) must equal at least 28.6 percent of the measure for market risk.)

(3) *Restrictions.* (i) The sum of Tier 2 capital (both allocated and excess) and Tier 3 capital (allocated in paragraph (b)(2) of this section) may not exceed 100 percent of Tier 1 capital (both allocated and excess).[9]

(ii) Term subordinated debt (and intermediate-term preferred stock and related surplus) included in Tier 2 capital (both allocated and excess) may not exceed 50 percent of Tier 1 capital (both allocated and excess).

(4) *Numerator calculation.* Add Tier 1 capital (both allocated and excess), Tier 2 capital (both allocated and excess), and Tier 3 capital (allocated under paragraph (b)(2) of this section). The resulting sum is the bank's risk-based capital ratio numerator.

Section 4. Internal Models

(a) *General.* For risk-based capital purposes, a bank subject to this appendix

[1] This appendix is based on a framework developed jointly by supervisory authorities from the countries represented on the Basle Committee on Banking Supervision and endorsed by the Group of Ten Central Bank Governors. The framework is described in a Basle Committee paper entitled ''Amendment to the Capital Accord to Incorporate Market Risk,'' January 1996.

[2] Trading activity means the gross sum of trading assets and liabilities as reported in the bank's most recent quarterly Consolidated Report of Condition and Income (Call Report).

[3] Total assets means quarter-end total assets as reported in the bank's most recent Call Report.

[4] A bank that voluntarily complies with the final rule prior to January 1, 1998, must comply with all of its provisions.

[5] Subject to FDIC review, a bank may exclude structural positions in foreign currencies from its covered positions.

[6] The term trading account is defined in the instructions to the Call Report.

[7] Foreign exchange positions outside the trading account and all over-the-counter derivative positions, whether or not in the trading account, must be included in adjusted risk weighted assets as determined in appendix A of this part.

[8] A bank may not allocate Tier 3 capital to support credit risk (as calculated under appendix A of this part).

[9] Excess Tier 1 capital means Tier 1 capital that has not been allocated in paragraphs (b)(1) and (b)(2) of this section. Excess Tier 2 capital means Tier 2 capital that has not been allocated in paragraph (b)(1) and (b)(2) of this section, subject to the restrictions in paragraph (b)(3) of this section.

must use its internal model to measure its daily VAR, in accordance with the requirements of this section.[10] The FDIC may permit a bank to use alternative techniques to measure the market risk of de minimis exposures so long as the techniques adequately measure associated market risk.

(b) *Qualitative requirements.* A bank subject to this appendix must have a risk management system that meets the following minimum qualitative requirements:

(1) The bank must have a risk control unit that reports directly to senior management and is independent from business trading units.

(2) The bank's internal risk measurement model must be integrated into the daily management process.

(3) The bank's policies and procedures must identify, and the bank must conduct, appropriate stress tests and backtests.[11] The bank's policies and procedures must identify the procedures to follow in response to the results of such tests.

(4) The bank must conduct independent reviews of its risk measurement and risk management systems at least annually.

(c) *Market risk factors.* The bank's internal model must use risk factors sufficient to measure the market risk inherent in all covered positions. The risk factors must address interest rate risk,[12] equity price risk, foreign exchange rate risk, and commodity price risk.

(d) *Quantitative requirements.* For regulatory capital purposes, VAR measures must meet the following quantitative requirements:

(1) The VAR measures must be calculated on a daily basis using a 99 percent, one-tailed confidence level with a price shock equivalent to a ten-business day movement in rates and prices. In order to calculate VAR measures based on a ten-day price shock, the bank may either calculate ten-day figures directly or convert VAR figures based on holding periods other than ten days to the equivalent of a ten-day holding period (for instance, by multiplying a one-day VAR measure by the square root of ten).

(2) The VAR measures must be based on an historical observation period (or effective observation period for a bank using a weighting scheme or other similar method) of at least one year. The bank must update data sets at least once every three months or more frequently as market conditions warrant.

(3) The VAR measures must include the risks arising from the non-linear price characteristics of options positions and the sensitivity of the market value of the positions to changes in the volatility of the underlying rates or prices. A bank with a large or complex options portfolio must measure the volatility of options positions by different maturities.

(4) The VAR measures may incorporate empirical correlations within and across risk categories, provided that the bank's process for measuring correlations is sound. In the event that the VAR measures do not incorporate empirical correlations across risk categories, then the bank must add the separate VAR measures for the four major risk categories to determine its aggregate VAR measure.

(e) *Backtesting.* (1) Beginning one year after a bank starts to comply with this appendix, a bank must conduct backtesting by comparing each of its most recent 250 business days' actual net trading profit or loss[13] with the corresponding daily VAR measures generated for internal risk measurement purposes and calibrated to a one-day holding period and a 99 percent, one-tailed confidence level.

(2) Once each quarter, the bank must identify the number of exceptions, that is, the number of business days for which the magnitude of the actual daily net trading loss, if any, exceeds the corresponding daily VAR measure.

(3) A bank must use the multiplication factor indicated in Table 1 of this appendix in determining its capital charge for market risk under section 3(a)(2)(i)(B) of this appendix until it obtains the next quarter's backtesting results, unless the FDIC determines that a different adjustment or other action is appropriate.

TABLE 1.—MULTIPLICATION FACTOR BASED ON RESULTS OF BACKTESTING

Number of exceptions	Multiplication factor
4 or fewer	3.00
5	3.40
6	3.50
7	3.65
8	3.75
9	3.85
10 or more	4.00

Section 5. Specific Risk

(a) *Specific risk add-on.* For purposes of section 3(a)(2)(ii) of this appendix, a bank's specific risk add-on equals the standard specific risk capital charge calculated under paragraph (c) of this section. If, however, a bank can demonstrate to the FDIC that its internal model measures the specific risk of covered debt and/or equity positions and that those measures are included in the VAR-based capital charge in section 3(a)(2)(i) of this appendix, then the bank may reduce or eliminate its specific risk add-on under this section. The determination as to whether a model incorporates specific risk must be made separately for covered debt and equity positions.

(1) If a model includes the specific risk of covered debt positions but not covered equity positions (or vice versa), then the bank can reduce its specific risk charge for the included positions under paragraph (b) of this section. The specific risk charge for the positions not included equals the standard specific risk capital charge under paragraph (c) of this section.

(2) If a model addresses the specific risk of both covered debt and equity positions, then the bank can reduce its specific risk charge for both covered debt and equity positions under paragraph (b) of this section. In this case, the comparison described in paragraph (b) of this section must be based on the total VAR-based figure for the specific risk of debt and equity positions, taking into account any correlations that are built into the model.

(b) *VAR-based specific risk capital charge.* In all cases where a bank measures specific risk in its internal model, the total capital charge for specific risk (i.e., the VAR-based specific risk capital charge plus the specific risk add-on) must equal at least 50 percent of the standard specific risk capital charge (this amount is the minimum specific risk charge).

(1) If the portion of a bank's VAR measure that is attributable to specific risk (multiplied by the bank's multiplication factor if required in section 3(a)(2) of this appendix) is greater than or equal to the minimum specific risk charge, then the bank has no specific risk add-on and its capital charge for specific risk is the portion included in the VAR measure.

(2) If the portion of a bank's VAR measure that is attributable to specific risk (multiplied by the bank's multiplication factor if required in section 3(a)(2) of this appendix) is less than the minimum specific risk charge, then the bank's specific risk add-on is the difference between the minimum specific risk charge and the specific risk portion of the VAR measure (multiplied by the bank's multiplication factor if required in section 3(a)(2) of this appendix).

(c) *Standard specific risk capital charge.* The standard specific risk capital charge equals the sum of the components for covered debt and equity positions as follows:

(1) *Covered debt positions.* (i) For purposes of this section 5, covered debt positions means fixed-rate or floating-rate debt instruments located in the trading account and instruments located in the trading account with values that react primarily to changes in interest rates, including certain non-convertible preferred stock, convertible bonds, and instruments subject to repurchase and lending agreements. Also included are derivatives (including written and purchased options) for which the underlying instrument is a covered debt instrument that is subject to a non-zero specific risk capital charge.

(A) For covered debt positions that are derivatives, a bank must risk-weight (as

[10] A bank's internal model may use any generally accepted measurement techniques, such as variance-covariance models, historical simulations, or Monte Carlo simulations. However, the level of sophistication and accuracy of a bank's internal model must be commensurate with the nature and size of its covered positions. A bank that modifies its existing modeling procedures to comply with the requirements of this appendix for risk-based capital purposes should, nonetheless, continue to use the internal model it considers most appropriate in evaluating risks for other purposes.

[11] Stress tests provide information about the impact of adverse market events on a bank's covered positions. Backtests provide information about the accuracy of an internal model by comparing a bank's daily VAR measures to its corresponding daily trading profits and losses.

[12] For material exposures in the major currencies and markets, modeling techniques must capture spread risk and must incorporate enough segments of the yield curve—at least six—to capture differences in volatility and less than perfect correlation of rates along the yield curve.

[13] Actual net trading profits and losses typically include such things as realized and unrealized gains and losses on portfolio positions as well as fee income and commissions associated with trading activities.

described in paragraph (c)(1)(iii) of this section) the market value of the effective notional amount of the underlying debt instrument or index portfolio. Swaps must be included as the notional position in the underlying debt instrument or index portfolio, with a receiving side treated as a long position and a paying side treated as a short position; and

(B) For covered debt positions that are options, whether long or short, a bank must risk-weight (as described in paragraph (c)(1)(iii) of this section) the market value of the effective notional amount of the underlying debt instrument or index multiplied by the option's delta.

(ii) A bank may net long and short covered debt positions (including derivatives) in identical debt issues or indices.

(iii) A bank must multiply the absolute value of the current market value of each net long or short covered debt position by the appropriate specific risk weighting factor indicated in Table 2 of this appendix. The specific risk capital charge component for covered debt positions is the sum of the weighted values.

TABLE 2.—SPECIFIC RISK WEIGHTING FACTORS FOR COVERED DEBT POSITIONS

Category	Remaining maturity (contractual)	Weighting factor (in percent)
Government	N/A	0.00
Qualifying	6 months or less.	0.25
	Over 6 months to 24 months.	1.00
	Over 24 months.	1.60
Other	N/A	8.00

(A) The *government* category includes all debt instruments of central governments of OECD-based countries [14] including bonds, Treasury bills, and other short-term instruments, as well as local currency instruments of non-OECD central governments to the extent the bank has liabilities booked in that currency.

(B) The *qualifying* category includes debt instruments of U.S. government-sponsored agencies, general obligation debt instruments issued by states and other political subdivisions of OECD-based countries, multilateral development banks, and debt instruments issued by U.S. depository institutions or OECD-banks that do not qualify as capital of the issuing institution.[15] This category also includes other debt instruments, including corporate debt and revenue instruments issued by states and other political subdivisions of OECD countries, that are:

(*1*) Rated investment-grade by at least two nationally recognized credit rating services;

(*2*) Rated investment-grade by one nationally recognized credit rating agency and not rated less than investment-grade by any other credit rating agency; or

(*3*) Unrated, but deemed to be of comparable investment quality by the reporting bank and the issuer has instruments listed on a recognized stock exchange, subject to review by the FDIC.

(C) The *other* category includes debt instruments that are not included in the government or qualifying categories.

(2) *Covered equity positions.* (i) For purposes of this section 5, covered equity positions means equity instruments located in the trading account and instruments located in the trading account with values that react primarily to changes in equity prices, including voting or non-voting common stock, certain convertible bonds, and commitments to buy or sell equity instruments. Also included are derivatives (including written and purchased options) for which the underlying is a covered equity position.

(A) For covered equity positions that are derivatives, a bank must risk weight (as described in paragraph (c)(2)(iii) of this section) the market value of the effective notional amount of the underlying equity instrument or equity portfolio. Swaps must be included as the notional position in the underlying equity instrument or index portfolio, with a receiving side treated as a long position and a paying side treated as a short position; and

(B) For covered equity positions that are options, whether long or short, a bank must risk weight (as described in paragraph (c)(2)(iii) of this section) the market value of the effective notional amount of the underlying equity instrument or index multiplied by the option's delta.

(ii) A bank may net long and short covered equity positions (including derivatives) in identical equity issues or equity indices in the same market.[16]

(iii)(A) A bank must multiply the absolute value of the current market value of each net long or short covered equity position by a risk weighting factor of 8.0 percent, or by 4.0 percent if the equity is held in a portfolio that is both liquid and well-diversified.[17] For covered equity positions that are index contracts comprising a well-diversified portfolio of equity instruments, the net long or short position is multiplied by a risk weighting factor of 2.0 percent.

(B) For covered equity positions from the following futures-related arbitrage strategies, a bank may apply a 2.0 percent risk weighting factor to one side (long or short) of each position with the opposite side exempt from charge, subject to review by the FDIC:

(*1*) Long and short positions in exactly the same index at different dates or in different market centers; or

(*2*) Long and short positions in index contracts at the same date in different but similar indices.

(C) For futures contracts on broadly-based indices that are matched by offsetting positions in a basket of stocks comprising the index, a bank may apply a 2.0 percent risk weighting factor to the futures and stock basket positions (long and short), provided that such trades are deliberately entered into and separately controlled, and that the basket of stocks comprises at least 90 percent of the capitalization of the index.

(iv) The specific risk capital charge component for covered equity positions is the sum of the weighted values.

By Order of the Board of Directors.

Dated at Washington, D.C., this *13th* day of *August*, 1996.

Federal Deposit Insurance Corporation.

Jerry L. Langley,

Executive Secretary.

[FR Doc. 96–22546 Filed 9–5–96; 8:45 am]

BILLING CODE 4810–33–P; 6210–01–P; 6714–01–P

[14] Organization for Economic Cooperation and Development (OECD)-based countries is defined in appendix A of this part.

[15] U.S. government-sponsored agencies, multilateral development banks, and OECD banks are defined in appendix A of this part.

[16] A bank may also net positions in depository receipts against an opposite position in the underlying equity or identical equity in different markets, provided that the bank includes the costs of conversion.

[17] A portfolio is liquid and well-diversified if: (1) it is characterized by a limited sensitivity to price changes of any single equity issue or closely related group of equity issues held in the portfolio; (2) the volatility of the portfolio's value is not dominated by the volatility of any individual equity issue or by equity issues from any single industry or economic sector; (3) it contains a large number of individual equity positions, with no single position representing a substantial portion of the portfolio's total market value; and (4) it consists mainly of issues traded on organized exchanges or in well-established over-the-counter markets.

federal register

Friday
September 6, 1996

Part V

Department of Housing and Urban Development

24 CFR Parts 247, 880, and 884
Termination of Tenancy for Criminal Activity; Final Rule

DEPARTMENT OF HOUSING AND URBAN DEVELOPMENT

24 CFR Parts 247, 880, and 884

[Docket No. FR–3472–F–02]

RIN 2502–AG12

Office of the Assistant Secretary for Housing-Federal Housing Commissioner; Termination of Tenancy for Criminal Activity

AGENCY: Office of the Assistant Secretary for Housing-Federal Housing Commissioner, HUD.

ACTION: Final rule.

SUMMARY: This final rule provides that any criminal activity that threatens the health, safety, or right to peaceful enjoyment of the premises by other residents; any criminal activity that threatens the health, safety, or right to peaceful enjoyment of their residences by persons residing in the immediate vicinity of the premises; any criminal activity that threatens the health, or safety of any on-site property management staff responsible for managing the premises; or any drug-related criminal activity on or near such premises, engaged in by a resident, any member of the resident's household, or any guest or other person under the resident's control shall be grounds for termination of tenancy.

EFFECTIVE DATE: October 7, 1996.

FOR FURTHER INFORMATION CONTACT: Barbara D. Hunter, Director, Program Management Division, Office of Multifamily Asset Management and Disposition, Room 6180, Department of Housing and Urban Development, 451 Seventh Street, S.W., Washington, D.C. 20410–8000; telephone, (voice) (202) 708–3944; (TTY) (202) 708–4594. (These are not toll-free numbers.)

SUPPLEMENTARY INFORMATION:

The Proposed Rule

On February 3, 1994, the Department published in the Federal Register a proposed rule (59 FR 5155) that would provide that any criminal activity that threatens the health, safety, or right to peaceful enjoyment of the premises by other tenants; any criminal activity that threatens the health, safety, or right to peaceful enjoyment of their residences by persons residing in the immediate vicinity of the premises; or any drug-related criminal activity on or near such premises, engaged in by a tenant, any member of the tenant's household, or any guest or other person under the tenant's control would be grounds for termination of tenancy.

The deadline for public comments on the proposed rule was April 4, 1994. By that date, the Department received 130 comments. Most of these comments (111 out of 130) came from individuals or entities responsible for managing subsidized housing. The Department also received comments from several housing authorities and housing finance agencies, as well as from several public interest and legal aid associations.

The majority of the public commenters (121 out of 130) supported the proposed rule. These commenters typically reported that criminal activity, particularly drug-related criminal activity, is the biggest problem faced by managers of subsidized housing. Many of these commenters stated that the provisions of the proposed rule will provide them legal strength in eviction proceedings; they asserted that judges often place more weight on Federal regulations than on the lease or other rules. Several commenters added that the provisions of the proposed rule would help them provide decent and safe housing to their tenants, and that such provisions are long overdue.

Several commenters suggested revisions to the proposed rule. For instance, several commenters suggested that the Department define phrases such as ''on or near such premises,'' ''criminal activity,'' and ''any guest or other person under the tenant's control.'' These commenters asserted that these phrases are subject to differing interpretations, and they provide little guidance to a landlord trying to decide whether to pursue a termination of tenancy. Other commenters suggested that the Department broaden the provisions of the proposed rule to protect the health and safety of any on-site property management staff, because these individuals are often endangered by criminal activity.

Six commenters expressed serious legal and policy concerns with the proposed rule. These commenters argued that the Department would violate several State and Federal statutes and the U.S. Constitution if it permitted the eviction of a tenant who did not commit, had no knowledge of, nor had means to stop the criminal activity. While the proposed rule echoes statutory language (42 U.S.C. 1437f(d)(1)(B)(iii)), one commenter presented evidence that Congress intended to protect innocent tenants. These commenters argued further that the proposed rule should more closely track the public housing regulations, which provide that in the case of an eviction for criminal activity, the PHA shall have discretion to consider all the circumstances of the case, including the seriousness of the offense, the extent of participation by family members, and the effects that the eviction would have on family members not involved in the proscribed activity (24 CFR 966.4).

The Final Rule

In response to public comments, this final rule represents two changes to the provisions of the proposed rule. First, the Department decided to include in this final rule criminal activity against on-site property management staff as grounds for termination of tenancy. Second, this final rule provides a definition for ''drug-related criminal activity.''

While some of the commenters requested additional definitions, the Department has determined that such definitions would not, on balance, further the goals of this rule. Providing concrete definitions would be contrary to the recommendations of the national Occupancy Task Force. The Occupancy Task Force was convened under Congressional mandate, and it consisted of representatives of both housing providers and tenant advocacy/legal aid organizations. The Task Force was charged with issuing a final report to Congress and to HUD on occupancy and management recommendations in public and assisted housing. The members of the Occupancy Task Force observed in their Final Report, which was issued in April 1994, that they had considered defining related terms such as ''criminal activity that threatens,'' but they ''agreed that from a practical standpoint, it would be impossible to define this term since it turns on the facts in every given situation'' (page 3–7). (Notice of the availability of the final report was published in the Federal Register on July 21, 1994, 59 FR 37255). Furthermore, in accordance with several of the commenters, the Department intended that the provisions of this rule would parallel the public housing regulations; none of the terms suggested by the commenters are defined in the comparable public housing regulations.

The Department has decided, however, to include the definition of ''drug-related criminal activity'' in this final rule, because this definition is provided in section 8(f)(5) of the United States Housing Act of 1937. Accordingly, this final rule provides that ''drug-related criminal activity'' means the illegal manufacture, sale, distribution, use or possession with the intent to manufacture, sell, distribute, or use, of a controlled substance (as defined in section 102 of the Controlled Substances Act (21 U.S.C. 802)).

With regard to the concerns raised by several commenters that the proposed rule could result in the eviction of an innocent tenant, the Department would like to emphasize that an owner may not evict any tenant except by judicial action pursuant to State or local law, and in accordance with the Department's due process procedures. This final rule applies uniformly to all assisted housing tenants. Furthermore, the Department adopted similar termination language (excluding the reference to project management employees) for the HUD Model Form of Lease (used for all subsidized multifamily housing programs) by Handbook 4350.3, Change 22 of June 1992.

The Department believes that promulgation of this rule is consistent with sound program administration, is balanced and fair, and provides a valuable tool for fighting crime and drugs in assisted housing communities while maintaining requisite due process protections for the residents. Establishing criminal activity of a threatening nature and drug-related crime on or near the premises as clear grounds for termination of tenancy is supported by the recommendation (#58, page 3–7) of the Occupancy Task Force Final Report.

This final rule revises 24 CFR parts 247, 880, and 884 by adding a definition of ''drug-related criminal activity'' and by revising the management provisions. Since the Department removed the management provisions of parts 881 and 883 in a final rule published on March 27, 1996 (61 FR 13586), and replaced them with a cross-reference to the identical management provisions in part 880, it is unnecessary for the Department to amend parts 881 and 883 in this final rule.

For purposes of existing housing under the section 8 loan management and property disposition programs (24 CFR part 886, subparts A and C), this final rule implements section 8(d)(1)(B)(iii) of the United States Housing Act of 1937 (42 U.S.C. 1437f), as that section was amended by the Cranston-Gonzalez National Affordable Housing Act and the Housing and Community Development Act of 1992. These two programs rely upon part 247 for termination of tenancy provisions. In addition, this final rule covers the following subsidized projects subject to the regulations in 24 CFR part 247: multifamily housing projects that receive the benefit of subsidy in the form of below-market interest rates under sections 221(d) (3) and (5); interest reduction payments under section 236 of the National Housing Act, including Rental Assistance Payments (RAP); below-market interest rate direct loans under section 202 of the Housing Act of 1959; rental subsidy in the form of rent supplement payments under section 101 of the Housing and Urban Development Act of 1965; and section 8 in connection with section 202 Loans for Housing for the Elderly or Handicapped (24 CFR part 891); the Supportive Housing for the Elderly program and the Supportive Housing for Persons with Disabilities program (24 CFR part 891). (By final rule published on March 22, 1996 (61 FR 11948), the regulations governing (1) Loans for Housing for the Elderly or Handicapped, formerly found in 24 CFR part 885, (2) Supportive Housing for the Elderly, formerly found in 24 CFR part 889, and (3) Supportive Housing for Persons with Disabilities, formerly found in 24 CFR part 890, were consolidated into a new part 24 CFR part 891.) Finally, this rule also applies to evictions under the section 8 new construction and substantial rehabilitation programs.

Other Matters

Environmental Impact

A Finding of No significant Impact (FONSI) with respect to the environment was made at the time of the development of the proposed rule, in accordance with HUD regulations at 24 CFR part 50, which implement section 102(2)(c) of the National Environmental Policy Act of 1969, 42 U.S.C. 4321 *et seq.* That FONSI remains applicable to this final rule and is available for public inspection between 7:30 a.m. and 5:30 p.m. weekdays in the Office of the Rules Docket Clerk at the above address.

Regulatory Flexibility Act

The Secretary in accordance with the Regulatory Flexibility Act (5 U.S.C. 605(b)) has reviewed and approved this rule, and in so doing certifies that this rule will not have a significant economic impact on a substantial number of small entities. This rule prohibits any criminal activity or drug-related criminal activity on or near premises where law-abiding tenants live.

Family Impact

The General Counsel, as the Designated Official under Executive Order 12606, *The Family,* has determined that this final rule has the potential for a significant impact on family formation, maintenance, and general well-being; this rule should increase the safety and security of families living in assisted housing. Since the impact of this rule on the family is beneficial, no further review is considered necessary.

Federalism

The General Counsel, as the Designated Official under section 6(a) of Executive Order 12612, *Federalism*, has determined that the policies contained in this rule would not have significant federalism implications and thus, are not subject to review under the order. This final rule will not interfere with or preempt State or local government functions.

Regulatory Planning and Review

The Office of Management and Budget (OMB) reviewed this rule under Executive Order 12866, *Regulatory Planning and Review*, issued by the President on September 30, 1993. Any changes to the rule subsequent to its submission to OMB are identified in the docket file, which is available for public inspection between 7:30 a.m. and 5:30 p.m. weekdays in the Office of the Rules Docket Clerk, Department of Housing and Urban Development, Room 10276, 451 Seventh Street, SW., Washington, DC.

List of Subjects

24 CFR Part 247

Grant programs—housing and community development, Loan programs—housing and community development, Low and moderate income housing, Rent subsidies.

24 CFR Part 880

Grant programs—housing and community development, Rent subsidies, Reporting and recordkeeping requirements.

24 CFR Part 884

Grant programs—housing and community development, Rent subsidies, Reporting and recordkeeping requirements, Rural areas.

Accordingly, 24 CFR parts 247, 880, and 884 are amended as follows:

PART 247—EVICTIONS FROM CERTAIN SUBSIDIZED AND HUD-OWNED PROJECTS

1. The authority citation for 24 CFR part 247 is revised to read as follows:

Authority: 12 U.S.C. 1701q, 1701s, 1715b, 1715*l*, and 1715z–1; 42 U.S.C. 1437a, 1437c, 1437f, and 3535(d).

2. Section 247.2 is amended by removing the paragraph designation for each definition, and by adding a definition *''Drug-related criminal activity''* in alphabetical order, to read as follows:

§ 247.2 Definitions.

* * * * *

Drug-related criminal activity means the illegal manufacture, sale, distribution, use or possession with the intent to manufacture, sell, distribute, or use, of a controlled substance as defined in section 102 of the Controlled Substances Act, 21 U.S.C. 802.

* * * * *

3. Section 247.3 is amended by removing the word ''or'' from paragraph (a)(2); by redesignating paragraph (a)(3) as paragraph (a)(4); by amending paragraph (b) by removing the reference to ''§ 247.3(a)(3)'' and adding in its place ''§ 247.3(a)(4)''; and by adding a new paragraph (a)(3); to read as follows:

§ 247.3 Entitlement of tenants to occupancy.

(a) * * *

(3) Any criminal activity that threatens the health, safety, or right to peaceful enjoyment of the premises by other residents; any criminal activity that threatens the health, safety, or right to peaceful enjoyment of their residences by persons residing in the immediate vicinity of the premises; any criminal activity that threatens the health, or safety of any on-site property management staff responsible for managing the premises; or any drug-related criminal activity on or near such premises, engaged in by a resident, any member of the resident's household, or any guest or other person under the resident's control shall be grounds for termination of tenancy.

* * * * *

§ 247.4 [Amended]

4. In § 247.4, paragraph (c) is amended by removing the reference to ''§ 247.3(a)(3)'' and by adding in its place ''§ 247.3(a)(4).''

PART 880—SECTION 8 HOUSING ASSISTANCE PAYMENTS PROGRAM FOR NEW CONSTRUCTION

5. The authority citation for 24 CFR part 880 continues to read as follows:

Authority: 42 U.S.C. 1437a, 1437c, 1437f and 3535(d), and 13611–13619.

6. Section 880.201 is amended by adding the definition ''*Drug-related criminal activity*'' in alphabetical order, to read as follows:

§ 880.201 Definitions.

* * * * *

Drug-related criminal activity. The illegal manufacture, sale, distribution, use or possession with the intent to manufacture, sell, distribute, or use, of a controlled substance as defined in section 102 of the Controlled Substances Act, 21 U.S.C. 802.

* * * * *

7. Section 880.607 is amended by removing the word ''or'' from paragraph (b)(1)(ii); by redesignating paragraph (b)(1)(iii) as (b)(1)(iv); by amending paragraphs (b)(2) and (c)(2) by removing the references to ''(b)(1)(iii)'' and by adding in their places ''(b)(1)(iv)''; and by adding a new paragraph (b)(1)(iii); to read as follows:

§ 880.607 Termination of tenancy and modification of leases.

* * * * *

(b) * * *

(1) * * *

(iii) Any criminal activity that threatens the health, safety, or right to peaceful enjoyment of the premises by other residents; any criminal activity that threatens the health, safety, or right to peaceful enjoyment of their residences by persons residing in the immediate vicinity of the premises; any criminal activity that threatens the health, or safety of any on-site property management staff responsible for managing the premises; or any drug-related criminal activity on or near such premises, engaged in by a resident, any member of the resident's household, or any guest or other person under the resident's control shall be grounds for termination of tenancy.

* * * * *

PART 884—SECTION 8 HOUSING ASSISTANCE PAYMENTS PROGRAM, NEW CONSTRUCTION SET-ASIDE FOR SECTION 515 RURAL RENTAL HOUSING PROJECTS

8. The authority citation for 24 CFR part 884 continues to read as follows:

Authority: 42 U.S.C. 1437a, 1437c, 1437f and 3535(d), and 13611–13619.

9. Section 884.102 is amended by adding, in alphabetical order, a definition of ''*Drug-related criminal activity*'', to read as follows:

§ 884.102 Definitions.

* * * * *

Drug-related criminal activity. The illegal manufacture, sale, distribution, use or possession with the intent to manufacture, sell, distribute, or use, of a controlled substance as defined in section 102 of the Controlled Substances Act, 21 U.S.C. 802.

* * * * *

10. Section 884.216 is amended by designating the current paragraph as paragraph (a), and by adding a new paragraph (b), to read as follows:

§ 884.216 Termination of tenancy.

* * * * *

(b) Any criminal activity that threatens the health, safety, or right to peaceful enjoyment of the premises by other residents; any criminal activity that threatens the health, safety, or right to peaceful enjoyment of their residences by persons residing in the immediate vicinity of the premises; any criminal activity that threatens the health, or safety of any on-site property management staff responsible for managing the premises; or any drug-related criminal activity on or near such premises; or any drug-related criminal activity on or near such premises, engaged in by a resident, any member of the resident's household, or any guest or other person under the resident's control shall be grounds for termination of tenancy.

Dated: May 31, 1996.

Nicholas P. Retsinas,

Assistant Secretary for Housing-Federal Housing Commissioner.

[FR Doc. 96–22775 Filed 9–5–96; 8:45 am]

BILLING CODE 4210–27–P

federal register

Friday
September 6, 1996

Part VI

Department of Defense

General Services Administration

National Aeronautics and Space Administration

48 CFR Parts 1, et al.

Federal Acquisition Regulation; Application of Special Simplified Procedures to Certain Commercial Items; and Procurement Integrity; Proposed Rules

DEPARTMENT OF DEFENSE

GENERAL SERVICES ADMINISTRATION

NATIONAL AERONAUTICS AND SPACE ADMINISTRATION

48 CFR Parts 5, 11, 12, 13, and 52

[FAR Case 96–307]

RIN 9000–AH20

Federal Acquisition Regulation; Application of Special Simplified Procedures to Certain Commercial Items

AGENCIES: Department of Defense (DOD), General Services Administration (GSA), and National Aeronautics and Space Administration (NASA).

ACTION: Proposed rule.

SUMMARY: The Civilian Agency Acquisition Council and the Defense Acquisition Regulations Council are proposing to amend the Federal Acquisition Regulation (FAR) to implement section 4202 of the Federal Acquisition Reform Act of 1996 (Pub. L. 104–106). Section 4202 requires revisions to the FAR to incorporate special simplified procedures for the acquisition of certain commercial items with a value greater than the simplified acquisition threshold ($100,000) but not greater than $5 million. The purpose of this revision is to vest contracting officers with additional procedural discretion and flexibility, so that commercial item acquisitions in this dollar range may be solicited, offered, evaluated, and awarded in a simplified manner that maximizes efficiency and economy and minimizes burden and administrative costs for both the Government and industry. This regulatory action was not subject to Office of Management and Budget review under Executive Order 12866, dated September 30, 1993. This is not a major rule under 5 U.S.C. 804.

DATES: Comments should be submitted on or before November 5, 1996 to be considered in the formulation of a final rule.

ADDRESSES: Interested parties should submit written comments to: General Services Administration, FAR Secretariat (VRS), 18th and F Streets NW., Room 4037, Washington, DC 20405.

Please cite FAR case 96–307 in all correspondence related to this case.

FOR FURTHER INFORMATION CONTACT: The FAR Secretariat, Room 4037, GS Building, Washington, DC 20405 (202) 501–4755. Please cite FAR case 96–307.

SUPPLEMENTARY INFORMATION:

A. Background

This proposed rule amends the Federal Acquisition Regulation to implement section 4202 of the Federal Acquisition Reform Act of 1996 (Pub. L. 104–106). Section 4202 authorizes special simplified procedures for acquisitions of commercial items at amounts greater than the simplified acquisition threshold ($100,000) but not greater than $5 million when the contracting officer reasonably expects, based on the nature of the commercial items sought and on market research, that offers will include only commercial items. The authority to use the special simplified procedures under this section expires on January 1, 2000. Section 4202 also amends 10 U.S.C. 2305, 41 U.S.C. 253a, and 41 U.S.C. 416 to permit issuance of solicitations for commercial items in fewer than 15 days after the synopsis notice is published.

Pursuant to section 4202 of Pub. L. 104–106, acquisitions of commercial items using special simplified procedures are exempt from many of the Competition in Contracting Act (CICA) requirements that otherwise apply to acquisitions over the simplified acquisition threshold. Solicitations are not required to state the relative importance assigned to each evaluation factor and subfactor, nor are they required to include subfactors at all. Contracting officers have the flexibility to, among other things—

(1) Forego formal evaluation plans, scoring of quotes or offers, or a competitive range determination;

(2) Negotiate with one or more offerors, as appropriate, but not necessarily all offerors;

(3) Conduct comparative evaluations of offers; and

(4) Evaluate past performance based on such information as the contracting officer's knowledge and previous experience with the item or service being purchased, customer surveys, or other reasonable basis, without the existence of a formal database.

Synopsis requirements still apply, and all responsible sources must be permitted to submit a quote or offer which the contracting officer must consider. Sole-source acquisitions must be justified and approved consistent with existing CICA requirements. Otherwise, except for those procedures specifically limited to the simplified acquisition threshold or a lower threshold, this proposed rule authorizes use of procedures in FAR Part 13, Simplified Acquisition Procedures, for acquisitions of commercial items exceeding the simplified acquisition threshold but not exceeding $5,000,000 (including options) if the conditions apply that permit use of the special simplified procedures (see new subpart 13.6).

The special simplified procedures for commercial items also include guidance at 13.604 that expressly gives contracting officers the flexibility to indicate to an offeror a price the contracting officer anticipates offerors will have to meet or better to remain competitive; and/or a consideration other than price (e.g., a contract term, a commercially-available feature) the offeror will have to meet or better, as appropriate, to remain competitive. These techniques are used in the commercial marketplace to increase and sustain competitive pressures throughout the negotiation process and are expected to help improve the efficiency of negotiations and reduce bid and proposal preparation costs by reducing the guesswork currently required to remain competitive.

The Federal Acquisition Streamlining Act (FASA) of 1994 (Pub. L. 103–355) amended the publicizing and response time requirements for acquisitions of commercial items to allow less than a 30-day response time for receipt of offers after the date of issuance of a solicitation, provided the contracting officer establishes a response time that will afford potential offerors a reasonable opportunity to respond. Section 4202 further increases the contracting officer's latitude when acquiring commercial items by permitting a period of less than 15 days between publication of a synopsis notice and issuance of a solicitation. To bring these changes into compliance with the minimum time frames established in the North American Free Trade Agreement (NAFTA) and the Trade Agreements Act (TAA), this proposed rule adds new coverage at 5.203(h). For acquisitions subject to NAFTA or TAA, the period of time between synopsis and receipt of offers must be at least 40 days. However, the contracting officer can reduce this time period to as few as 10 days if the acquisition falls within a general category that is identified in an annual forecast, the availability of which is published in the *Commerce Business Daily*.

This proposed rule also includes additional changes that are intended to help further promote the Government's effective use of proven commercial buying practices. These changes include:

(1) Clarifying that an agency may identify its requirements in terms of

desired features or targets that do not have to be expressed as ranges;

(2) Changing the application of the Standard Form (SF) 1449, Solicitation/Contract/Order for Commercial Items (a form intended to emphasize the ''cultural shift'' to the use of commercial items and practices and which is currently mandatory for all paper solicitations or contracts for commercial items), so that, for acquisitions under the simplified acquisition threshold, use of the form is encouraged but is not mandatory; and

(3) Replacing references to ''minimum needs'' with ''needs.'' (The term ''minimum'' has historically been misinterpreted, and its removal is consistent with 10 U.S.C. 2305(a)(1)(B), which states, ''Each solicitation * * * shall include specifications which include restrictive provisions or conditions only to the extent necessary to satisfy the needs of the agency or as authorized by law.'' ''Minimum needs'' has inaccurately been considered to require that the Government describe its needs in terms of the lowest level of technical capabilities or features that will address the requirement. However, the Government actually has substantial latitude to describe its needs in the manner that reflects an optimum acquisition strategy, e.g., considering which item(s) represent the best value in terms of quality, expected life of item, vendor past performance; making use of capabilities in the marketplace, such as those for ensuring reliability and distributing products; requiring offerors to have a ''track record'' of previous production for a length of time appropriate to the item being acquired, when such a requirement can be shown to reasonably relate to helping ensure that the agency will acquire an item that meets its need.)

It is clear that the drafters of this legislation intended for commercial items to be purchased in as simplified a manner as possible. A report by the House Committee on Government Reform and Oversight (No. 104–222) on H.R. 1670 noted that, ''The purchase of a commercial item logically lends itself to simplified procedures because there exists a yardstick in the commercial marketplace against which to measure price and product quality and to serve as a surrogate for Government-unique procedures.'' The intent of this proposed rule is to ensure the benefits of this new authority can be fully realized by giving contracting officers a clear understanding of the procedural discretion and flexibility they have, so that acquisitions of commercial items conducted under these regulations may be solicited, offered, evaluated, and awarded in a simplified manner that maximizes efficiency and economy and minimizes burden and administrative costs for both the Government and its suppliers.

B. Regulatory Flexibility Act

The proposed changes may have a significant economic impact on a substantial number of small entities within the meaning of the Regulatory Flexibility Act, 5 U.S.C. 601, *et seq.*, because the rule implements the requirements of section 4202 of the Federal Acquisition Reform Act of 1996 and applies to all businesses, large or small, offering to sell commercial items to the Federal Government for amounts greater than the simplified acquisition threshold but not greater than $5,000,000. Statistics indicate that a majority of commercial sales to the Government come from small businesses. The rule imposes no new reporting or recordkeeping requirements, and it does not duplicate, overlap, or conflict with any other Federal rules. These new simplified procedures would enable small and large entities to conduct business with the Government in a simpler manner, similar to the business they conduct with their commercial counterparts. The rule is expected to have a beneficial impact on industry and, therefore, applies equally to both large and small entities. However, existing preferences for small businesses, in accordance with FAR Part 19, remain unchanged by this rule.

An Initial Regulatory Flexibility Analysis (IRFA) has been prepared and will be provided to the Chief Counsel for Advocacy for the Small Business Administration. A copy of the IRFA may be obtained from the FAR Secretariat. Comments are invited. Comments from small entities concerning the affected FAR subpart will be considered in accordance with 5 U.S.C. 610. Such comments must be submitted separately and should cite 5 U.S.C. 601, *et seq.* (FAR Case 96–307), in correspondence.

C. Paperwork Reduction Act

The Paperwork Reduction Act does not apply because the proposed changes to the FAR do not impose recordkeeping or information collection requirements, or collections of information from offerors, contractors, or members of the public which require the approval of the Office of Management and Budget under 44 U.S.C. 3501, *et seq.*

List of Subjects in 48 CFR Parts 5, 11, 12, 13, and 52

Government procurement.

Dated: August 30, 1996.

Jeremy Olson,

Acting Director, Office of Federal Acquisition Policy.

Therefore, it is proposed that 48 CFR Parts 5, 11, 12, 13, and 52 be amended as set forth below:

1. The authority citation for 48 CFR Parts 5, 11, 12, 13, and 52 continues to read as follows:

Authority: 40 U.S.C. 486(c); 10 U.S.C. 2301 to 2331; and 42 U.S.C. 2473(c).

PART 5–PUBLICIZING CONTRACT ACTIONS

2. Section 5.203 is amended by revising paragraph (a) and adding paragraph (h) to read as follows:

5.203 Publicizing and response time.

(a) A notice of contract action shall be published in the *Commerce Business Daily* at least 15 days before issuance of a solicitation except that for acquisitions of commercial items, the contracting officer may—

(1) Establish a shorter period for issuance of the solicitation; or

(2) Use the combined CBD synopsis/solicitation procedure (see 12.603).

* * * * *

(h) For acquisitions subject to NAFTA or the Trade Agreements Act (see Subpart 25.4), the period of time between publication of the synopsis notice and receipt of offers shall be no less than 40 days. However, if the acquisition falls within a general category identified in an annual forecast, the availability of which is published in the CBD, the contracting officer may reduce this time period to as few as 10 days.

3. Section 5.207 is amended by revising paragraph (e)(3) to read as follows:

5.207 Preparation and transmittal of synopses.

* * * * *

(e) * * *

(3) Except for contract actions equal to or less than the simplified acquisition threshold or acquisitions of commercial items, the synopsis shall refer to Numbered Note 22 for noncompetitive contract actions. If it is anticipated that award will be made via a delivery order to an existing basic ordering agreement, the synopsis shall so state.

* * * * *

PART 11–DESCRIBING AGENCY NEEDS

4. Section 11.002 is amended by revising paragraph (a)(1)(ii) and adding paragraph (e) to read as follows:

11.002 Policy.

(a) * * *

(1) * * *

(ii) Only include restrictive provisions or conditions to the extent necessary to satisfy the needs of the agency or as authorized by law.

* * * * *

(e) Some or all of the performance levels or performance specifications in a solicitation may be identified as targets rather than as fixed or minimum requirements.

5. Section 11.104 is amended by revising paragraph (a) to read as follows:

11.104 Items peculiar to one manufacturer.

* * * * *

(a) The particular brand-name, product, or feature is essential to the Government's requirements and market research indicates other companies' similar products, or products lacking the particular feature, do not meet, or cannot be modified to meet, the agency's minimum needs; and

* * * * *

PART 12–ACQUISITION OF COMMERCIAL ITEMS

6. Section 12.202 is amended by revising paragraph (b) to read as follows:

12.202 Market research and description of agency need.

* * * * *

(b) The description of agency need must contain sufficient detail for potential offerors of commercial items to know which commercial products or services may be suitable. Generally, for acquisitions in excess of the simplified acquisition threshold, an agency's statement of need for a commercial item will describe the type of product or service to be acquired and explain how the agency intends to use the product or service in terms of function to be performed, performance requirement or essential physical characteristics. Describing the agency's needs in these terms allows offerors to propose methods that will best meet the needs of the Government.

* * * * *

7. Section 12.203 is amended by adding a sentence to the end of the paragraph to read as follows:

12.203 Procedures for solicitation, evaluation, and award.

* * * The contracting officer may use the simplified acquisition procedures in Part 13 for acquisitions of commercial items up to $5,000,000, including options, other than those procedures specifically limited to the simplified acquisition threshold or a lower threshold (see Subpart 13.6).

8. Section 12.204 is revised to read as follows:

12.204 Solicitation/contract form.

(a) The contracting officer shall use the Standard Form 1449, Solicitation/Contract/Order for Commercial Items, if: (1) the acquisition is expected to exceed the simplified acquisition threshold; (2) a paper solicitation or contract is being issued; and (3) procedures at 12.603 are not being used. Use of the SF 1449 is nonmandatory but encouraged for commercial acquisitions not exceeding the simplified acquisition threshold.

(b) Consistent with the requirements at 5.203 (a) and (h), the contracting officer may allow fewer than 15 days before issuance of the solicitation.

9. Section 12.205 is amended by revising paragraph (c) to read as follows:

12.205 Offers.

* * * * *

(c) Consistent with the requirements at 5.203 (b) and (h), the contracting officer may allow fewer than 30 days response time for receipt of offers for commercial items.

10. Section 12.213 is revised to read as follows:

12.213 Other commercial practices.

It is a common practice in the commercial marketplace for both the buyer and seller to propose terms and conditions written from their particular perspectives. The terms and conditions prescribed in this Part 12 seek to balance the interests of both the buyer and seller. These terms and conditions are generally appropriate for use in a wide range of acquisitions. However, market research may indicate other commercial practices that are appropriate for the acquisition of the particular item. These practices should be considered for incorporation into the solicitation and contract if the contracting officer determines them appropriate in concluding a business arrangement satisfactory to both parties and not otherwise precluded by law or Executive order.

11. Section 12.302(a) is revised to read as follows:

12.302 Tailoring of provisions and clauses for the acquisition of commercial items.

(a) *General.* The provisions and clauses established in this subpart are intended to address, to the maximum extent practicable, commercial market practices for a wide range of potential Government acquisitions of commercial items.

However, because of the broad range of commercial items acquired by the Government, variations in commercial practices, and the relative volume of the Government's acquisitions in the specific market, contracting officers may, within the limitations of this subpart, and after conducting appropriate market research, tailor the provision at 52.212–1, Instructions to Offerors—Commercial Items, and the clause at 52.212–4, Contract Terms and Conditions—Commercial Items, to adapt to the market conditions for each acquisition.

* * * * *

12. Section 12.602 is amended by revising paragraph (a) to read as follows:

12.602 Streamlined evaluation of offers.

(a) When evaluation factors are used, the contracting officer may insert a provision substantially the same as the provision at 52.212–2, Evaluation—Commercial Items, in solicitations for commercial items or comply with the procedures in 13.106–2 if the acquisition is being made using the simplified acquisition procedures. When the provision at 52.212–2 is used, paragraph (a) of the provision shall be tailored to the specific acquisition to describe the evaluation factors and relative importance of those factors. However, contracting officers are not required to describe the relative importance of evaluation factors when using the simplified acquisition procedures in Part 13.

* * * * *

13. Section 12.603 is amended by revising paragraph (c)(3)(ii) to read as follows:

12.603 Streamlined solicitation for commercial items.

(c) * * *

(3) * * *

(ii) When using the combined CBD synopsis/solicitation, contracting officers shall establish a response time in accordance with 5.203(b).

* * * * *

PART 13—SIMPLIFIED ACQUISITION PROCEDURES

14. Section 13.000 is revised to read as follows:

13.000 Scope of part.

This part prescribes policies and procedures for the acquisition of supplies and services, including construction, research and development, and commercial items, the aggregate amount of which does not exceed the simplified acquisition threshold (see 2.101). (However, when the conditions in 13.602 are met, the contracting officer is authorized to use the procedures in this part, other than those specifically limited to the

simplified acquisition threshold or a lower threshold, for acquisitions of commercial items exceeding the simplified acquisition threshold but not greater than $5,000,000, including options.) See Part 12, Acquisition of Commercial Items, for policies applicable to the acquisition of commercial items exceeding the micro-purchase threshold. See 36.602–5 for simplified procedures to be used when acquiring architect-engineering services.

15. Section 13.103 is amended by revising paragraphs (b), (c) and (j) to read as follows:

13.103 Policy.

* * * * *

(b) The contracting office shall not use simplified acquisition procedures for contract actions exceeding $50,000 after December 31, 1999, unless the office's cognizant agency has certified full FACNET capability in accordance with 4.505–2. This limitation does not apply to acquisitions of commercial items conducted using Subpart 13.6.

(c) Simplified acquisition procedures shall not be used in the acquisition of supplies and services initially estimated to exceed the simplified acquisition threshold (or $5,000,000, including options, for acquisitions of commercial items using Subpart 13.6), even though resulting awards do not exceed that threshold. Requirements aggregating more than the simplified acquisition threshold (or $5,000,000, including options, if using Subpart 13.6) or the micro-purchase threshold shall not be broken down into several purchases that are less than the applicable threshold merely to permit use of simplified acquisition procedures, or to avoid any requirements that apply to purchases exceeding the micro-purchase threshold.

* * * * *

(j) Contracting officers are encouraged to use innovative approaches in awarding contracts using the simplified acquisition procedures under the authority of this part. For commercial items, contracting officers have the flexibility to use any combination of the procedures in Subpart 12.6 or Parts 13, 14, 15, 35, or 36, as applicable. For other than commercial items, the procedures in other FAR parts may be appropriate. Other FAR parts that may be used include, but are not limited to Parts 14, 15, 35, or 36, including the use of Standard Form (SF) 1442, Solicitation, Offer, and Award (Construction, Alteration, or Repair), for construction contracts (see 36.701(b)).

16. Section 13.104 is amended by revising paragraph (b) to read as follows:

13.104 Procedures.

* * * * *

(b) Related items (such as small hardware items or spare parts for vehicles) may be included in one solicitation and the award made on an ''all-or none'' or ''multiple award'' basis if suppliers are so advised when quotations or offers are requested.

* * * * *

17. Section 13.106–2 is amended by revising paragraphs (a)(1) through (a)(3) and the introductory text of paragraph (a)(4), (a) (5) and (6), (b)(1), (b)(3), (c) (1) and (2), (d)(3), and (d)(4)(ii) to read as follows:

13.106–2 Purchases exceeding the micro-purchase threshold.

(a) *Soliciting competition.* (1) Contracting officers shall promote competition to the maximum extent practicable to obtain supplies and services from the source whose offer is the most advantageous to the Government, based, as appropriate, on either price alone or price and other factors (e.g., past performance, quality) including the administrative cost of the purchase. Contracting officers are encouraged to use best value. Solicitations shall notify suppliers of the basis upon which award is to be made.

(2) For acquisitions not exceeding the simplified acquisition threshold where FACNET is not available, or an exemption set forth in 4.506 applies, quotations may be solicited through other appropriate means (e.g., orally, or in writing). The contracting officer shall comply with the requirements of 5.101 when not soliciting via FACNET. Sufficient information to permit vendors to develop quotations may be incorporated into the combined synopsis/solicitation. In such cases, the contracting officer is not required to issue a separate solicitation. For commercial item acquisitions, see 12.603.

(3) For acquisitions not exceeding $25,000, requests for quotations should be solicited orally to the maximum extent practicable when FACNET is not available or a written determination has been made that it is not practicable or cost-effective to purchase via FACNET. Sufficient information to permit suppliers to develop quotations may be incorporated into a combined synopsis/solicitation. In such cases, the contracting officer is not required to issue a separate solicitation. Paper solicitations for contract actions not expected to exceed $25,000 should only be issued when obtaining electronic or oral quotations is not considered economical or practicable. Written solicitations shall be issued for construction contracts over $2,000.

(4) If synopsizing is not required (e.g., the acquisition does not exceed $25,000 or an exemption to the synopsis requirement applies) and FACNET is not being used, solicitation of at least three sources generally may be considered to promote competition to the maximum practicable extent. In such circumstances, maximum practicable competition ordinarily can be obtained without soliciting quotations or offers from sources outside the local trade area. If practicable, two sources not included in the previous solicitation should be requested to furnish quotations or offers. The following factors influence the number of quotations or offers required in connection with any particular purchase:

* * * * *

(5) For purchases not exceeding the simplified acquisition threshold, contracting officers may solicit from one source if the contracting officer determines that the circumstances of the contract action deem only one source reasonably available. For acquisitions of commercial items in excess of the simplified acquisition threshold conducted pursuant to Subpart 13.6, the requirements at 13.603(a) apply.

(6) Contracting officers shall not limit competition to suppliers of well-known and widely distributed makes or brands (see 11.104), or solicit quotations on a personal preference basis.

* * * * *

(b) *Evaluation of quotations or offers.* (1) When evaluating quotations or offers, the evaluation must be performed based on any criteria established in the solicitation. All quotations or offers must be considered. However, the contracting officer has broad discretion in fashioning suitable evaluation procedures. The procedures prescribed in Parts 14 and 15 are not mandatory. At the contracting officer's discretion, one or more but not necessarily all of the evaluation procedures in Parts 14 or 15 may be used.

* * * * *

(3) Contracting officers shall evaluate quotations or offers inclusive of transportation charges from the shipping point of the supplier to the delivery destination.

* * * * *

(c) *Award.* (1) Occasionally an item can be obtained only from a supplier whothat quotes a minimum order price or quantity that either unreasonably exceeds stated quantity requirements or results in an unreasonable price for the quantities required. In these instances,

the contracting officer should inform the requiring activity of all facts regarding the quotation or offer and ask it to confirm or alter its requirement. The file shall be documented to support the final action taken.

(2) For acquisitions not exceeding the simplified acquisition threshold (other than those conducted through FACNET), Except for awards conducted through FACNET, notification to unsuccessful suppliers shall be given only if requested.

* * * * *

(d) * * *

(3) If only one source is solicited and the acquisition does not exceed the simplified acquisition threshold, an additional notation shall be made to explain the absence of competition, except for acquisition of utility services available only from one source.

(4) * * *

(ii) *Written solicitations (see 2.101).* For acquisitions not exceeding the simplified acquisition threshold, wWritten records of solicitations/offers may be limited to notes or abstracts to show prices, delivery, references to printed price lists used, the supplier or suppliers contacted, and other pertinent data.

* * * * *

18. Section 13.107 is amended by revising paragraph (a) to read as follows:

13.107 Solicitation forms.

(a) For use of the SF 1449, Solicitation/Contract/Order for Commercial Items, see 12.204

* * * * *

19. Section 13.202 is amended by revising paragraph (b)(2) to read as follows:

13.202 Establishment of blanket purchase agreements (BPAs).

* * * * *

(b) * * *

(2) Consider suppliers whose past performance has shown them to be dependable, and who offer good quality supplies or services at consistently lower prices

* * * * *

20. Section 13.204 is amended by revising paragraphs (a) and (b) to read as follows:

13.204 Purchases under blanket purchase agreements.

(a) The use of a BPA does not authorize purchases that are not otherwise authorized by law or regulation. For example, the BPA, being a method of simplifying the making of individual purchases, shall not be used to avoid the simplified acquisition threshold (or the $5,000,000 threshold, including options, on acquisitions using Subpart 13.6).

(b) Unless otherwise specified in agency regulations, individual purchases under BPAs, except those under BPAs established in accordance with 13.202(c)(3), shall not exceed $100,000 , or $5,000,000, including options, for acquisitions using Subpart 13.6).

* * * * *

21. Subpart 13.6, consisting of sections 13.601 through 13.604–4, is added to read as follows:

Subpart 13.6—Use of Simplified Acquisition Procedures for the Purchase of Commercial Items in Amounts Greater Than the Simplified Acquisition Threshold But Not Exceeding $5 Million

13.601 General.

This subpart authorizes, as a test program, use of the simplified acquisition procedures in Part 13 for the acquisition of commercial items in amounts greater than the simplified acquisition threshold but not exceeding $5,000,000, including options, if the condition in 13.602 is met. The purpose of this test program is to vest contracting officers with additional procedural discretion and flexibility, so that commercial item acquisitions in this dollar range may be solicited, offered, evaluated, and awarded in a simplified manner that maximizes efficiency and economy and minimizes burden and administrative costs for both the Government and industry (see section 4202 of Public Law 104–106). For the period of this test, contracting activities shall employ the simplified procedures authorized by the test to the maximum practicable extent. The authority to issue solicitations under this subpart shall expire on January 1, 2000. Contracts may be awarded after the expiration of this authority for solicitations issued before the expiration of the authority.

13.602 Condition for use.

(a) At the contracting officer's option, any procedure in Part 13, other than those whose use is specifically limited to the simplified acquisition threshold or a lower threshold, may be used for a commercial item acquisition in an amount greater than the simplified acquisition threshold but not exceeding $5,000,000, including options, if the contracting officer reasonably expects, based on the nature of the commercial items sought and on market research, that offers will include only commercial items.

(b) Circumstances under which the contracting officer may reasonably expect that offers will include only commercial items include, but are not limited to, the following:

(1) No sources of items other than commercial items are known to exist;

(2) Sources of items other than commercial items are known to exist but are not expected to submit offers; or

(3) The agency has specified that only offers of commercial items will be considered. (This is likely to occur when the agency has determined that utilizing the capabilities of the commercial market is the optimum means of meeting its needs.)

(c) If the contracting officer reasonably expected that offers would only include commercial items but receives one or more offers of other than commercial items, the contracting officer may proceed with the acquisition under the procedures in Part 13.

(d) Contracts for commercial items awarded using the procedures of Part 13 remain subject to the requirements of Part 12 and other parts of the FAR pursuant to the order of precedence provided at 12.102(c). This includes use of the provisions and clauses at Subpart 12.3.

13.603 Additional requirements.

(a) *Sole source acquisitions.* The acquisition may not be conducted on a sole source basis, unless the need to do so is justified in writing and approved at the levels as specified in subparagraphs (a)(1) and (a)(2) of this section. Full and open competition is not required; therefore, Part 6 does not apply; however, contracting officers shall prepare sole source justifications. When the types of conditions described at 6.302–2 occur (i.e., urgency), the justification may be made and approved within a reasonable time after contract award when preparation and approval prior to award would unreasonably delay the acquisition.

(1) For a proposed contract exceeding $100,000 but not exceeding $500,000, the contracting officer's certification that the justification is accurate and complete to the best of the contracting officer's knowledge and belief will serve as approval, unless a higher approval level is established in agency procedures.

(2) For a proposed contract exceeding $500,000, the waiver must be approved by the competition advocate for the procuring activity designated pursuant to 6.501; or an official described in 6.304(a)(3) or (a)(4). This authority is not delegable; and

(b) *Documentation.* The contract file shall include—

(1) A brief written description of the procedures used in awarding the contract;

(2) The number of offers received; and

(3) An explanation, tailored to the size and complexity of the acquisition, of the basis for the contract award decision.

13.604 Alternative negotiation techniques.

13.604–1 General.

In addition to other procedures authorized by this subpart, notwithstanding 15.610, the contracting officer may use the negotiation techniques described in this section.

13.604–2 Awards based on price and price-related factors only.

(a) The contracting officer may provide prospective offerors with a description of the Government's requirements and invite the submission of offers on a specified date, during a specified time period. During the specified time period, the amount of the lowest offer shall be posted electronically or otherwise on an auction board for viewing by interested parties. The identity of offerors shall not be disclosed during the period specified for receipt of offers. During the specified time period, offerors may revise offers at anytime. At the end of the specified period, the contracting officer awards the contract to the responsible offeror submitting the lowest priced acceptable offer.

(b) As an alternative to the approach outlined in paragraph (a) of this subsection, the contracting officer may indicate to offerors during negotiations a price that the offeror will have to meet or better in order to be considered further. The same price must be communicated to all offerors. The price established by the contracting officer may be based on offers received or information from other sources as they may relate to the total acquisition or to any contract line item(s). A reasonable response time shall be established for the submission of revised offers. The contracting officer may repeat the process as necessary to conduct negotiations that will result in the submission of lower priced acceptable offers that will satisfy the Government's requirements. Revising an offer to meet or better a price established by the contracting officer does not guarantee any offeror an award. Offerors eliminated from the competition shall be promptly notified that their offer is no longer being considered.

(c) Use of the technique described in paragraphs (a) and (b) of this subsection, may be appropriate when the contracting officer—

(1) Can provide prospective offerors with a purchase description that clearly defines the Government's requirements;

(2) Reasonably expects to receive more than one offer, and

(3) Does not expect discussions with offerors regarding non-price aspects of the offer will be necessary.

13.604–3 Awards based on price and other factors.

(a) When conducting negotiations, the contracting officer may indicate to all offerors a price, contract term or condition, commercially-available feature, and/or requirement (beyond any requirement or target specified in the solicitation) that an offeror will have to improve upon or meet, as appropriate, in order to remain competitive.

(b) The price or other requirement identified to an offeror by the contracting officer as an area needing improvement or as a condition for further consideration for award—

(1) May be based on an evaluation of offers received or information from other sources;

(2) May relate to the total acquisition or to any contract line item(s);

(3) Shall be based on an evaluation of individual offers and need not be the same for all offerors; and

(4) Shall not disclose proprietary information.

(c) The contracting officer may consider alternative offers. A reasonable response time shall be established for the submission of revised offers. The contracting officer may repeat the process as necessary to conduct negotiations that will result in increasing the value of acceptable offers that will satisfy the Government's requirements.

(d) Revising an offer to meet or better a price or other consideration established by the contracting officer does not guarantee any offeror an award.

(e) Offerors eliminated from the competition shall be promptly notified that their offer is no longer being considered.

(f) When an offeror's price is used as the basis for negotiating with other offerors, the identify of that offeror shall not be disclosed during negotiations.

13.604–4 Solicitation provisions.

(a) The contracting officer shall insert the provision at 52.213–4, Alternative Evaluation—Commercial Items, in lieu of the provision at 52.212–2, Evaluation—Commercial Items, when the procedures described in 13.604–2(a) will be used.

(b) The contracting officer shall insert a provision in solicitations, substantially the same as the provision at 52.213–5, Alternative Negotiation Techniques, when either the technique described in 13.604–2(b) or in 13.604–3 may be used.

PART 52—SOLICITATION PROVISIONS AND CONTRACT CLAUSES

22. Sections 52.213–4 and 52.213–5 are added to read as follows:

52.213–4 Alternative Evaluation—Commercial Items.

As prescribed in 13.604–4(a), insert the following provision:

Alternative Evaluation—Commercial Items (Date)

(a) The Government will award a contract resulting from this solicitation to the responsible offeror submitting the lowest priced offer that conforms to the solicitation. Offers shall be submitted on [*Contracting Officer inserts the date*] beginning at [*Contracting Officer inserts the time*] and ending at [*Contracting Officer inserts the time or date and time*]. During the specified time frame, the amount of the lowest offer will be posted and may be viewed by [*Contracting Officer describes how the information may be viewed electronically or otherwise*]. Offerors may revise offers anytime during the specified period. At the end of the specified time period, the responsible Offeror submitting the lowest priced offer will be in line for award.

(b) *Options.* The Government will evaluate offers for award purposes by adding the total price for all options to the total price for the basic requirement. The Government may determine that an offer is unacceptable if the option prices are significantly unbalanced. Evaluation of options shall not obligate the Government to exercise the options(s).

(c) A written notice of award or acceptance of an offer, mailed or otherwise furnished to the successful offeror within the time for acceptance specified in the offer, shall result in a binding contract without further action by either party. Before the offer's specified expiration time, the Government may accept an offer (or part of an offer) unless a written notice of withdrawal is received before award.

(End of provision)

52.213–5 Alternative Negotiation Techniques.

As prescribed in 13.604–4(b), insert the following provision:

Alternative Negotiation Techniques (Date)

The Contracting Officer may elect to use the alternative negotiation techniques described in section 13.604–2(b) or 13.604–3 of the Federal Acquisition Regulation in conducting this procurement. If used, offerors may respond by maintaining offers as originally submitted, revising offers, or by submitting an alternative offer. The Government may consider initial offers unless revised or withdrawn, revised offers, and alternative offers in making the award. Revising an offer does not guarantee an offeror an award.

(End of provision)

[FR Doc. 96–22745 Filed 9–5–96; 8:45 am]

BILLING CODE 6820–EP–P

DEPARTMENT OF DEFENSE

GENERAL SERVICES ADMINISTRATION

NATIONAL AERONAUTICS AND SPACE ADMINISTRATION

48 CFR Parts 1, 3, 4, 9, 12, 14, 15, 19, 33, 37, 43, 52, and 53

[FAR Case 96–314]

RIN 9000–AH19

Federal Acquisition Regulation; Procurement Integrity

AGENCIES: Department of Defense (DOD), General Services Administration (GSA), and National Aeronautics and Space Administration (NASA).

ACTION: Proposed rule.

SUMMARY: The Civilian Agency Acquisition Council and the Defense Acquisition Regulations Council are proposing to amend the Federal Acquisition Regulation (FAR) to implement Section 27 of the Office of Federal Procurement Policy (OFPP) Act, as amended by Section 4304 of the Fiscal Year 1996 National Defense Authorization Act, also known as the Federal Acquisition Reform Act. This regulatory action was not subject to Office of Management and Budget review under Executive Order 12866, dated September 30, 1993. This is not a major rule under 5 U.S.C. 804.

DATES: Comments should be submitted on or before November 5, 1996 to be considered in the formulation of a final rule.

ADDRESSES: Interested parties should submit written comments to: General Services Administration, FAR Secretariat (MVR), 18th & F Streets, NW, Room 4040, Washington, DC 20405.

Please cite FAR case 96–314 in all correspondence related to this case.

FOR FURTHER INFORMATION CONTACT: Mr. Peter O'Such at (202) 501–1759 in reference to this FAR case. For general information, contact the FAR Secretariat, Room 4040, GS Building, Washington, DC 20405 (202) 501–4755. Please cite FAR case 96–314.

SUPPLEMENTARY INFORMATION:

A. Background

On September 6, 1990, an interim rule with request for public comments was published in the Federal Register (55 FR 36782) under FAR case 89–023 to implement Section 27 of the OFPP Act. On November 30, 1990, as a result of amendments made by Section 815 of the FY 1991/1992 National Defense Authorization Act, Public Law 101–510, the interim rule was amended (55 FR 49852) and the time allowed for submission of public comments was extended. A total of 222 comments were received.

Section 4304 of the FY 1996 National Defense Authorization Act again amends Section 27 of the OFPP Act. As amended, Section 27 of the OFPP Act specifies restrictions in four areas: a prohibition on disclosing procurement information; a prohibition on obtaining procurement information; actions required of procurement officers when contacted by offerors regarding non-Federal employment; and a prohibition on former officials' acceptance of compensation from certain contractors.

The public comments received in response to the interim rule under FAR case 89–023 were considered in preparing this proposed rule, to the extent that the comments are relevant under the 1996 amendments to Section 27 of the OFPP Act.

B. Regulatory Flexibility Act

The proposed rule may have a significant beneficial economic impact on a substantial number of small entities within the meaning of the Regulatory Flexibility Act, 5 U.S.C. 601, *et seq.*, because the rule eliminates the procurement integrity certifications and supporting information previously required to be submitted by every bidder and apparently successful offeror for a contract of over $100,000, and every contractor seeking a contract modification valued at over $100,000. An Initial Regulatory Flexibility Analysis (IRFA) has been prepared and submitted to the Chief Counsel for Advocacy of the Small Business Administration. A copy of the IRFA may be obtained from the FAR Secretariat. Comments are invited. Comments from small entities concerning the affected FAR parts will be considered in accordance with Section 610 of the Act. Such comments must be submitted separately and cite FAR case 96–314 in correspondence.

C. Paperwork Reduction Act

The Paperwork Reduction Act (44 U.S.C. 3501, *et seq.*) may apply because the proposed rule eliminates existing recordkeeping and information collection requirements approved by the Office of Management and Budget under OMB Control Number 9000–0103. A paperwork burden of 43,333 hours would be eliminated.

List of Subjects in 48 CFR Parts 1, 3, 4, 9, 12, 14, 15, 19, 33, 37, 43, 52, and 53

Government procurement.

Dated: August 30, 1996.

Jeremy Olson,

Acting Director, Federal Acquisition Policy Division.

Therefore, it is proposed that 48 CFR Parts 1, 3, 4, 9, 12, 14, 15, 19, 33, 37, 43, 52, and 53 be amended as set forth below:

1. The authority citation for 48 CFR Parts 1, 3, 4, 9, 12, 14, 15, 19, 33, 37, 43, 52, and 53 continues to read as follows:

Authority: 40 U.S.C. 486(c); 10 U.S.C. chapter 137; and 42 U.S.C. 2473(c).

PART 1—FEDERAL ACQUISITION REGULATIONS SYSTEM

1.106 [Amended]

2. Section 1.106 is amended in the table by removing entries 3.104–9, 3.104–12(a)(12), 52.203–8, 52.203–9, and their respective OMB Control Numbers.

PART 3—IMPROPER BUSINESS PRACTICES AND PERSONAL CONFLICTS OF INTEREST

3. Sections 3.104 through 3.104–9 are revised to read as set forth below and sections 3.104–10 through 3.104–12 are removed.

Sec.
3.104 Procurement integrity.
3.104–1 General.
3.104–2 Applicability.
3.104–3 Statutory and related prohibitions, restrictions, and requirements.
3.104–4 Definitions.
3.104–5 Disclosure, protection, and marking of contractor bid or proposal information and source selection information.
3.104–6 Disqualification.
3.104–7 Ethics advisory opinions regarding prohibitions on former official's acceptance of compensation from contractors.
3.104–8 Contract clause.
3.104–9 Violations or possible violations.

3.104 Procurement integrity.

3.104–1 General.

(a) Section 3.104 implements section 27 of the Office of Federal Procurement Policy Act (41 U.S.C. 423), as amended by section 814 of the FY 90/91 National Defense Authorization Act, Pub. L. 101–189, section 815 of the FY 91 National Defense Authorization Act, Pub. L. 101–510, and section 4304 of the FY 96 National Defense Authorization Act, Pub. L. 104–106 (hereinafter, section 27 is referred to as ''the Act'' or ''the law

as amended''). Agency supplementation of 3.104 and any clauses required by 3.104 must be approved at a level not lower than the Senior Procurement Executive of the agency, unless a higher level of approval is required by law for that agency.

(b) Agency employees are reminded that there are other statutes and regulations that deal with prohibited conduct, for example—

(1) The offer or acceptance of a bribe or gratuity is prohibited by 18 U.S.C. 201, 10 U.S.C. 2207, 5 U.S.C. 7353, and 5 CFR Part 2635;

(2) Employment discussions are covered by 18 U.S.C. 208, which precludes a Government employee from participating personally and substantially in any particular matter that would affect the financial interests of any person with whom the employee is negotiating for employment;

(3) Post-employment restrictions are covered by 18 U.S.C. 207, which prohibits certain activities by former Government employees, including representation of a contractor before the Government in relation to any contract or other particular matter involving specific parties on which the former employee participated personally and substantially while employed by the Government; and

(4) FAR Parts 14 and 15, which place restrictions on the release of information related to procurements and other contractor information which must be protected under 18 U.S.C. 1905. In addition, 5 CFR Part 2635 protects non-public Government information.

3.104–2 Applicability.

(a) The restrictions at 3.104–3 (a) through (c) apply after [insert date 30 days after publication of final rule or January 1, 1997, whichever is earlier] to the conduct of every Federal agency procurement using competitive procedures for the acquisition of goods or services from non-Federal sources using appropriated funds.

(b) The post-employment restrictions at 3.104–3(d) apply to any former official of a Federal agency whose employment by a Federal agency ended on or after January 1, 1997. Former officials of a Federal agency whose employment by a Federal agency ended before January 1, 1997, are subject to the restrictions imposed by 41 U.S.C. 423 as it existed before Pub. L. 104–106.

3.104–3 Statutory and related prohibitions, restrictions, and requirements.

(a) *Prohibition on disclosing procurement information (subsection 27(a) of the Act).* (1) A person described in paragraph (a)(2) of this subsection shall not, other than as provided by law, knowingly disclose contractor bid or proposal information or source selection information before the award of a Federal agency procurement contract to which the information relates.

(2) Paragraph (a)(1) of this subsection applies to any person who—

(i) Is a present or former official of the United States, or a person who is acting or has acted for or on behalf of, or who is advising or has advised the United States with respect to, a Federal agency procurement; and

(ii) By virtue of that office, employment, or relationship has or had access to contractor bid or proposal information or source selection information.

(b) *Prohibition on obtaining procurement information (subsection 27(b) of the Act).* A person shall not, other than as provided by law, knowingly obtain contractor bid or proposal information or source selection information before the award of a Federal agency procurement contract to which the information relates.

(c) *Actions required of agency officials when contacted by offerors regarding non-Federal employment (subsection 27(c) of the Act).* (1) If an agency official who is participating personally and substantially in a Federal agency procurement for a contract in excess of the simplified acquisition threshold contacts or is contacted by a person who is a bidder or offeror in that Federal agency procurement regarding possible non-Federal employment for that official, the official shall—

(i) Promptly report the contact in writing to the official's supervisor and to the designated agency ethics official (or designee) of the agency in which the official is employed; and

(ii)(A) Reject the possibility of non-Federal employment; or

(B) Disqualify himself or herself from further personal and substantial participation in that Federal agency procurement until such time as the agency has authorized the official to resume participation in such procurement, either in accordance with the requirements of 18 U.S.C. 208 and applicable agency regulations, or on the grounds that—

(*1*) The person is no longer a bidder or offeror in that Federal agency procurement; or

(*2*) All discussions with the bidder or offeror regarding possible non-Federal employment have terminated without an agreement or arrangement for employment.

(2) The requirements in subsection 27(c)(1) of the Act do not apply to an agency official after the contract has been awarded or the procurement has been canceled.

(d) *Prohibition on former official's acceptance of compensation from a contractor (subsection 27(d) of the Act).* (1) A former official of a Federal agency may not accept compensation from a contractor as an employee, officer, director, or consultant of the contractor within a period of one year after such former official—

(i) Served, at the time of selection of the contractor or the award of a contract to that contractor, as the procuring contracting officer, the source selection authority, a member of the source selection evaluation board, or the chief of a financial or technical evaluation team in a procurement in which that contractor was selected for award of a contract in excess of $10,000,000;

(ii) Served as the program manager, deputy program manager, or administrative contracting officer for a contract in excess of $10,000,000 awarded to that contractor; or

(iii) Personally made for the Federal agency—

(A) A decision to award a contract, subcontract, modification of a contract or subcontract, or a task order or delivery order in excess of $10,000,000 to that contractor;

(B) A decision to establish overhead or other rates applicable to a contract or contracts for that contractor that are valued in excess of $10,000,000;

(C) A decision to approve issuance of a contract payment or payments in excess of $10,000,000 to that contractor; or

(D) A decision to pay or settle a claim in excess of $10,000,000 with that contractor.

(2) Nothing in paragraph (d)(1) of this subsection may be construed to prohibit a former official of a Federal agency from accepting compensation from any division or affiliate of a contractor that does not produce the same or similar products or services as the entity of the contractor that is responsible for the contract referred to in paragraph (d)(1) of this subsection.

3.104–4 Definitions.

As used in this section—

Agency ethics official means the designated agency ethics official described in 5 CFR 2638.201 and any other person, including deputy ethics officials described in 5 CFR 2638.204, to whom authority under 3.104–7 has been delegated by the designated agency ethics official.

Contractor bid or proposal information means any of the following information submitted to a Federal agency as part of or in connection with

a bid or proposal to enter into a Federal agency procurement contract, if that information has not been previously made available to the public or disclosed publicly:

(1) Cost or pricing data (as defined by 10 U.S.C. 2306a(h) with respect to procurements subject to that section, and section 304A(h) of the Federal Property and Administrative Services Act of 1949 (41 U.S.C. 254b(h)), with respect to procurements subject to that section).

(2) Indirect costs and direct labor rates.

(3) Proprietary information about manufacturing processes, operations, or techniques marked by the contractor in accordance with applicable law or regulation.

(4) Information marked by the contractor as ''contractor bid or proposal information'' in accordance with applicable law or regulation.

Federal agency has the meaning provided such term in section 3 of the Federal Property and Administrative Services Act of 1949 (40 U.S.C. 472).

Federal agency procurement means the acquisition (by using competitive procedures and awarding a contract) of goods or services (including construction) from non-Federal sources by a Federal agency using appropriated funds.

Official means the following:

(1) An officer, as defined in 5 U.S.C. 2104.

(2) An employee, as defined in 5 U.S.C. 2105.

(3) A member of the uniformed services, as defined in 5 U.S.C. 2101(3).

Participated personally and substantially means active and significant involvement of the individual in activities directly related to the procurement.

(1) To participate ''personally'' means to participate directly, and includes the direct and active supervision of a subordinate's participation in the matter.

(2) To participate ''substantially'' means that the employee's involvement is of significance to the matter. Substantial participation requires more than official responsibility, knowledge, perfunctory involvement, or involvement on an administrative or peripheral issue. Participation may be substantial even though it is not determinative of the outcome of a particular matter. A finding of substantiality should be based not only on the effort devoted to a matter, but on the importance of the effort. While a series of peripheral involvements may be insubstantial, the single act of approving or participating in a critical step may be substantial. However, the review of procurement documents solely to determine compliance with regulatory, administrative, or budgetary procedures, does not constitute substantial participation in a procurement.

(3) Generally, an individual will not be considered to have participated personally and substantially in a procurement solely by participating in the following activities:

(i) Federal advisory committees that are established and function in accordance with the Federal Advisory Committee Act, 5 U.S.C. App. 2, unless the Federal advisory committee is established or used for the purpose of, and the individual member participates personally and substantially in, any of the following functions:

(A) Drafting, reviewing, or approving the specification or statement of work for the procurement;

(B) Preparing or developing the procurement request, purchase request, or solicitation;

(C) Evaluating bids or proposals, or selecting a source;

(D) Negotiating price or terms and conditions of the contract; or

(E) Review and approval of the award of the contract.

(ii) Agency level boards, panels, or other advisory committees that review program milestones or evaluate and make recommendations regarding alternative technologies or approaches for satisfying broad agency level missions or objectives;

(iii) The performance of general, technical, engineering, or scientific effort having broad application not directly associated with a particular procurement, notwithstanding that such general, technical, engineering, or scientific effort subsequently may be incorporated into a particular procurement;

(iv) Clerical functions supporting the conduct of a particular procurement; and

(v) For procurements to be conducted under the procedures of OMB Circular A–76, participation in management studies, preparation of in-house cost estimates, preparation of ''most efficient organization'' analyses, and furnishing of data or technical support to be used by others in the development of performance standards, statements of work, or specifications.

Source selection information means any of the following information which is prepared for use by a Federal agency for the purpose of evaluating a bid or proposal to enter into a Federal agency procurement contract, if that information has not been previously made available to the public or disclosed publicly:

(1) Bid prices submitted in response to a Federal agency invitation for bids, or lists of those bid prices before bid opening.

(2) Proposed costs or prices submitted in response to a Federal agency solicitation, or lists of those proposed costs or prices.

(3) Source selection plans.

(4) Technical evaluation plans.

(5) Technical evaluations of proposals.

(6) Cost or price evaluations of proposals.

(7) Competitive range determinations that identify proposals that have a reasonable chance of being selected for award of a contract.

(8) Rankings of bids, proposals, or competitors.

(9) Reports and evaluations of source selection panels, boards, or advisory councils.

(10) Other information marked as ''SOURCE SELECTION INFORMATION—SEE FAR 3.104'' based on a case-by-case determination by the head of the agency or designee, or the contracting officer, that its disclosure would jeopardize the integrity or successful completion of the Federal agency procurement to which the information relates.

3.104–5 Disclosure, protection, and marking of contractor bid or proposal information and source selection information.

(a) Except as specifically provided for in this subsection, no person or other entity may disclose contractor bid or proposal information or source selection information to any person other than a person authorized, in accordance with applicable agency regulations or procedures, by the head of the agency or designee, or the contracting officer, to receive such information.

(b) Contractor bid or proposal information and source selection information shall be protected from unauthorized disclosure in accordance with 14.401, 15.411, 15.413, applicable law, and agency regulations.

(c) In determining whether particular information is source selection information, see 3.104–4 and consult with agency officials as necessary. Individuals responsible for preparing material that may include information designated as source selection information in accordance with 3.104–4 shall mark the cover page and each page that contains source selection information with the legend ''SOURCE SELECTION INFORMATION—SEE FAR 3.104.'' Although the material described

in 3.104–4 is considered to be source selection information whether or not marked, all reasonable efforts shall be made to mark such material with this legend.

(d) *Contested markings.* (1) Except as provided in subparagraph (d)(4) of this subsection, if the contracting officer believes that information marked as proprietary is not proprietary, or information otherwise marked as contractor bid or proposal information is not contractor bid or proposal information, the contractor that has affixed the marking shall be notified in writing and given an opportunity to justify the marking. If the contractor agrees that the marking is not justified, or does not respond within the time specified in the notice, the contracting officer may remove the marking and the information may be released.

(2) After reviewing any justification submitted by the contractor, if the contracting officer determines that the marking is not justified, the contracting officer shall so notify the contractor in writing.

(3) Information marked by the contractor as proprietary, or otherwise marked as contractor bid or proposal information, shall not be released until—

(i) The review of the contractor's justification has been completed; or

(ii) The period specified for the contractor's response has elapsed, whichever is earlier. Thereafter, the contracting officer may release the information.

(4) With respect to technical data that are marked proprietary by a contractor, the contracting officer shall generally follow the procedures in 27.404(h).

(e) Nothing in this section restricts or prohibits—

(1) A contractor from disclosing its own bid or proposal information or the recipient from receiving that information;

(2) The disclosure or receipt of information relating to a Federal agency procurement after it has been canceled by the Federal agency, before contract award, unless the Federal agency plans to resume the procurement; or

(3) Individual meetings between a Federal agency official and an offeror or potential offeror for, or a recipient of, a contract or subcontract under a Federal agency procurement, provided that unauthorized disclosure or receipt of contractor bid or proposal information or source selection information does not occur.

(4) The Government's use of technical data in a manner consistent with the Government's rights in the data.

(f) Nothing in this section shall be construed to authorize—

(1) The withholding of any information pursuant to a proper request from the Congress, any committee or subcommittee thereof, a Federal agency, the Comptroller General, or an Inspector General of a Federal agency, except as otherwise authorized by law or regulation. Any such release which contains contractor bid or proposal information or source selection information shall clearly notify the recipient that the information or portions thereof are contractor bid or proposal information or source selection information related to the conduct of a Federal agency procurement, the disclosure of which is restricted by section 27 of the Act; or

(2) The withholding of information from, or restricting its receipt by, the Comptroller General of the United States in the course of a protest against the award or proposed award of a Federal agency procurement contract.

3.104–6 Disqualification.

(a) *Disqualification notice.* An agency official who is participating personally and substantially in a Federal agency procurement for a contract in excess of the simplified acquisition threshold, and who wishes to discuss possible non-Federal employment with a bidder or offeror in that Federal agency procurement, shall submit to the Head of the Contracting Activity (HCA) or designee, prior to initiating or engaging in such discussions, a written notice of disqualification from further participation in the procurement. This is in addition to the requirement at 3.104–3(c)(1)(i). Concurrent copies of the notice shall be submitted to the contracting officer, the Source Selection Authority if the contracting officer is not the Source Selection Authority, and the agency official's immediate supervisor. As a minimum, the notice shall—

(1) Identify the procurement;

(2) Describe the nature of the agency official's participation in the procurement and specify the approximate dates or time period of participation; and

(3) Identify the bidder or offeror and describe its interest in the procurement.

(b) *Suspension from and resumption of participation in a procurement.* (1) The contracting officer, or the Source Selection Authority if the contracting officer is not the Source Selection Authority, shall suspend the individual's participation in the procurement until such time as the agency has authorized the official to resume participation in such procurement in accordance with 3.104–3(c)(1)(ii)(B).

(2) Subsequent to a period of disqualification, if an agency wishes to reinstate the agency official to participation in the procurement, the HCA or designee may authorize immediate reinstatement or may authorize reinstatement following whatever additional period of disqualification the HCA determines is necessary to ensure the integrity of the procurement process. The agency cannot force an agency official to terminate employment discussions in order to reinstate the official. The agency may reinstate an agency official who is still conducting employment discussions if the agency, following 18 U.S.C. 208 procedures, determines that the interest is not so substantial as to be deemed likely to affect the integrity of the official's services. It is within the discretion of the HCA, or designee, to determine that the agency official shall not be reinstated to participation in the procurement. In determining that any additional period of disqualification is necessary, the HCA or designee shall consider any factors that might give rise to an appearance that the agency official acted without complete impartiality with respect to issues involved in the procurement.

3.104–7 Ethics advisory opinions regarding prohibitions on former official's acceptance of compensation from contractors.

(a) An official or former official of a Federal agency who does not know whether he is or would be precluded by subsection (d) of the Act (see 3.104–3(d)) from accepting compensation from a particular contractor may request advice from the appropriate designated agency ethics official (or designee) prior to accepting such compensation.

(b) The request for an advisory opinion shall be submitted in writing, shall be dated and signed, and shall include all information reasonably available to the official or former official that is relevant to the inquiry. As a minimum, the request shall include—

(1) Information about the procurement(s), or decision(s) on matters under 3.104–3(d)(1)(iii), involving the particular contractor, in which the individual was or is involved, including contract or solicitation numbers, dates of solicitation or award, and a description of the goods or services procured or to be procured;

(2) Information about the individual's participation in the procurement or decision, including the dates or time periods of that participation, and the

nature of the individual's duties, responsibilities, or actions; and

(3) Information about the contractor who would be a party to the proposed conduct, including a description of the products or services produced by the division or affiliate of the contractor from whom the individual proposes to accept compensation.

(c) Within 30 days after the date a request containing complete information is received, or as soon thereafter as practicable, the agency ethics official shall issue an opinion as to whether proposed conduct is proper or would violate subsection 27(d) of the Act.

(d)(1) Where complete information is not included in the request, the agency ethics official may ask the requester to provide any information reasonably available to that person. Additional information may also be requested from other persons, including the Source Selection Authority, the contracting officer, or the requester's immediate supervisor.

(2) In issuing an opinion, the agency ethics official may rely upon the accuracy of information furnished by the requester or other agency sources, unless he or she has reason to believe that the information is fraudulent, misleading, or otherwise incorrect.

(e) Where the requester engages in conduct in good faith reliance upon an ethics advisory opinion, or a contractor engages in conduct based upon good faith reliance on the requester's ethics advisory opinion, neither the requester nor the contractor shall be found to have knowingly violated the restriction in issue. Where the requester or the contractor has actual knowledge or reason to believe that the opinion is based upon fraudulent, misleading, or otherwise incorrect information, their reliance upon the opinion will not be deemed to be in good faith.

3.104–8 Contract clause.

(a) The contracting officer shall insert the clause at 52.203–8, Cancellation, Rescission and Recovery of Funds for Illegal or Improper Activity, in solicitations and contracts with a value exceeding the simplified acquisition threshold (see Part 2).

(b) The contracting officer shall insert the clause at 52.203–10, Price or Fee Adjustment for Illegal or Improper Activity, in all solicitations and contracts with a value exceeding the simplified acquisition threshold (see Part 2).

3.104–9 Violations or possible violations.

(a) If the contracting officer receives or obtains information of a violation or possible violation of subsections 27 (a), (b), (c), or (d) of the Act (see 3.104–3), the contracting officer shall determine whether the reported violation or possible violation has any impact on the pending award or selection of the source therefor.

(1) If the contracting officer concludes that there is no impact on the procurement, the contracting officer shall forward the information concerning the violation or possible violation, accompanied by appropriate documentation supporting that conclusion, to an individual designated in accordance with agency procedures. With the concurrence of that individual, the contracting officer shall, without further approval, proceed with the procurement.

(2) If the individual reviewing the contracting officer's conclusion does not agree with that conclusion, the individual shall advise the contracting officer to withhold award and shall promptly forward the information and documentation to the HCA or designee.

(3) If the contracting officer concludes that the violation or possible violation impacts the procurement, the contracting officer shall promptly forward the information to the HCA or designee.

(b) The HCA or designee receiving any information describing an actual or possible violation of subsections 27 (a), (b), (c), or (d) of the Act, shall review all information available and take appropriate action in accordance with agency procedures, such as—

(1) Advising the contracting officer to continue with the procurement;

(2) Causing an investigation to be conducted;

(3) Referring the information disclosed to appropriate criminal investigative agencies;

(4) Concluding that a violation occurred; or

(5) Recommending an agency head determination that the contractor, or someone acting for the contractor, has engaged in conduct constituting an offense punishable under subsection 27(e) of the Act, for the purpose of voiding or rescinding the contract.

(c) Prior to concluding that a bidder, offeror, contractor, or person has violated the Act, the HCA or designee may request information from appropriate parties regarding the violation or possible violation when considered in the best interests of the Government.

(d) If the HCA or designee concludes that the prohibitions of section 27 of the Act have been violated, then the HCA or designee may direct the contracting officer to—

(1) If a contract has not been awarded—

(i) Cancel the procurement;

(ii) Disqualify an offeror; or

(iii) Take any other appropriate actions in the interests of the Government.

(2) If a contract has been awarded—

(i) Effect appropriate contractual remedies, including profit recapture as provided for in the clause at 52.203–10, Price or Fee Adjustment for Illegal or Improper Activity, or, if the contract has been rescinded under paragraph (d)(2)(ii) of this subsection, recovery of the amount expended under the contract;

(ii) Void or rescind the contract with respect to which—

(A) The contractor or someone acting for the contractor has been convicted for an offense where the conduct constitutes a violation of subsections 27 (a) or (b) of the Act for the purpose of either—

(*1*) Exchanging the information covered by such subsections for anything of value; or

(*2*) Obtaining or giving anyone a competitive advantage in the award of a Federal agency procurement contract; or

(B) The head of the agency, or designee, has determined, based upon a preponderance of the evidence, that the contractor or someone acting for the contractor has engaged in conduct constituting an offense punishable under subsection 27(e)(1) of the Act]; or

(iii) Take any other appropriate actions in the best interests of the Government.

(3) Refer the matter to the agency suspension and debarment official.

(e) The HCA or designee shall recommend or direct an administrative or contractual remedy commensurate with the severity and effect of the violation.

(f) If the HCA or designee receiving information concerning a violation or possible violation determines that award is justified by urgent and compelling circumstances, or is otherwise in the interests of the Government, the HCA may authorize the contracting officer to award the contract or execute the contract modification after notification to the Head of the Agency in accordance with agency procedures.

(g) The HCA may delegate his or her authority under this subsection 3.104–9 to an individual at least one organizational level above the contracting officer and of General Officer, Flag, SES or equivalent rank.

(h) Criminal and civil penalties, and administrative remedies, as set forth in subsection (e) of the Act, may apply to

conduct which violates the Act (see 3.104–3; see also 33.102(f) for special rules regarding bid protests).

4. Section 3.700 is amended by revising paragraph (a) to read as follows:

3.700 Scope of subpart.

(a) This subpart prescribes Governmentwide policies and procedures for exercising discretionary authority to declare void and rescind contracts in relation to which—

(1) There has been a final conviction for bribery, conflict of interest, disclosing or obtaining contractor bid or proposal information or source selection information in exchange for a thing of value or to give anyone a competitive advantage in the award of a Federal agency procurement contract, or similar misconduct; or

(2) There has been an agency head determination that contractor bid or proposal information or source selection information has been disclosed or obtained in exchange for a thing of value, or for the purpose of obtaining or giving anyone a competitive advantage in the award of a Federal agency procurement contract.

* * * * *

5. Section 3.701 is revised to read as follows:

3.701 Purpose.

This subpart provides—

(a) An administrative remedy with respect to contracts in relation to which there has been—

(1) A final conviction for bribery, conflict of interest, disclosing or obtaining contractor bid or proposal information or source selection information in exchange for a thing of value or to give anyone a competitive advantage in the award of a Federal agency procurement contract, or similar misconduct; or

(2) An agency head determination that contractor bid or proposal information or source selection information has been disclosed or obtained in exchange for a thing of value, or for the purpose of obtaining or giving anyone a competitive advantage in the award of a Federal agency procurement contract; and

(b) A means to deter similar misconduct in the future by those who are involved in the award, performance, and administration of Government contracts.

6. Section 3.703 is amended by designating the existing text as paragraph (a) and adding paragraph (b) to read as follows:

3.703 Authority.

* * * * *

(b) Subsection 27(e)(3) of the Office of Federal Procurement Policy Act (41 U.S.C. 423) (''the OFPP Act''), as amended, requires a Federal agency, upon receiving information that a contractor or a person has engaged in conduct constituting a violation of subsection 27 (a) or (b) of the OFPP Act, to consider rescission of a contract with respect to which—

(1) The contractor or someone acting for the contractor has been convicted for an offense punishable under subsection 27(e)(1) of the OFPP Act; or

(2) The head of the agency, or designee, has determined, based upon a preponderance of the evidence, that the contractor or someone acting for the contractor has engaged in conduct constituting such an offense.

7. Section 3.704 is amended in paragraph (b) by removing the acronym ''FAR''; and adding paragraph (c) to read as follows:

3.704 Policy.

* * * * *

(c) If there is a final conviction for an offense punishable under subsection 27(e) of the OFPP Act (41 U.S.C. 423), or if the head of the agency, or designee, has determined, based upon a preponderance of the evidence, that the contractor or someone acting for the contractor has engaged in conduct constituting such an offense, then the HCA shall consider, in addition to any other penalty prescribed by law or regulation—

(1) Declaring void and rescinding contracts, as appropriate, and recovering the amounts expended under the contracts by using the procedures at 3.705 (see 3.104–9); and

(2) Recommending the initiation of suspension or debarment proceedings in accordance with Subpart 9.4.

3.705 [Amended]

8. Section 3.705 is amended in the second sentence of paragraph (c)(3) by removing the words ''the conviction'' and inserting ''a conviction'' in its place; in paragraph (d)(1) by removing the comma after the word ''therefor''; and in paragraph (d)(3) by inserting the words ''offense or'' before the word ''final''.

PART 4—ADMINISTRATIVE MATTERS

4.803 [Amended]

9. Section 4.803 is amended by removing paragraph (a)(42) and redesignating (a)(43) as (a)(42).

PART 9—CONTRACTOR QUALIFICATIONS

9.105–3 [Amended]

10. Section 9.105–3 is amended in paragraph (c) by revising the parenthetical to read ''(see 3.104–4)''.

9.106–3 [Amended]

11. Section 9.106–3 is amended by removing the paragraph (a) designation and paragraph (b).

9.505 [Amended]

12. Section 9.505 is amended in paragraph (b)(1) by revising ''3.104–4(j)'' to read ''3.104–4''; and in (b)(2) by revising ''3.104–4(k)'' to read ''3.104–4''.

PART 12—ACQUISITION OF COMMERCIAL ITEMS

12.503 [Amended]

13. Section 12.503 is amended by removing paragraph (b)(4) and redesignating (b)(5) and (b)(6) as (b)(4) and (b)(5).

12.504 [Amended]

14. Section 12.504 is amended by removing paragraph (b)(3) and redesignating (b)(4) as (b)(3).

PART 14—SEALED BIDDING

14.404–2 [Amended]

15. Section 14.404–2 is amended by removing paragraph (m).

PART 15—CONTRACTING BY NEGOTIATION

15.413 [Amended]

16. Section 15.413 is amended by removing the word ''proprietary'' and inserting ''contractor bid or proposal information'' in its place.

15.413–2 [Amended]

17. Section 15.413–2 is amended by removing paragraph (f)(6).

15.509 [Amended]

18. Section 15.509 is amended in paragraph (f)(4) by removing '', and to complete the certification required by 3.104–9''; and by removing paragraph (h)(3).

15.805–5 [Amended]

19. Section 15.805–5 is amended in paragraph (j) by revising the parenthetical to read ''(see 3.104–4)''; and removing paragraph (k).

PART 19—SMALL BUSINESS PROGRAMS

19.811–1 [Amended]

20. Section 19.811–1 is amended by removing paragraph (d).

19.811–2 [Amended]

21. Section 19.811–2 is amended by removing paragraph (b) and redesignating paragraph ''(c)'' as ''(b)''.

PART 33—PROTESTS, DISPUTES, AND APPEALS

22. Section 33.102 is amended by adding paragraph (f) to read as follows:

33.102 General.

* * * * *

(f) No person may file a protest for a procurement integrity violation unless that person reported to the contracting officer the information constituting evidence of the violation within 14 days after the person first discovered the possible violation. This implements 41 U.S.C. 423(g).

PART 37—SERVICE CONTRACTING

37.103 [Amended]

23. Section 37.103 is amended by removing paragraph (c) and redesignating paragraph (d) as (c).

PART 43—CONTRACT MODIFICATIONS

43.106 [Reserved]

24. Section 43.106 is removed and reserved.

PART 52—SOLICITATION PROVISIONS AND CONTRACT CLAUSES

25. Section 52.203–8 is revised to read as follows:

52.203–8 Cancellation, Rescission and Recovery of Funds for Illegal or Improper Activity.

As prescribed in 3.104–8, insert the following clause in solicitations and contracts:

Cancellation, Rescission and Recovery of Funds for Illegal or Improper Activity (Date)

(a) If the Government receives information that a contractor or a person has engaged in conduct constituting a violation of subsection (a), (b), (c), or (d) of Section 27 of the Office of Federal Procurement Policy Act (41 U.S.C. 423) (the Act), as amended by section 4304 of the 1996 National Defense Authorization Act (Pub. L. 104–106), the Government may:

(1) Cancel the solicitation, if the contract has not yet been awarded or issued; or

(2) Rescind the contract with respect to which—

(i) The Contractor or someone acting for the Contractor has been convicted for an offense where the conduct constitutes a violation of subsection 27 (a) or (b) of the Act for the purpose of either—

(A) Exchanging the information covered by such subsections for anything of value; or

(B) Obtaining or giving anyone a competitive advantage in the award of a Federal agency procurement contract; or

(ii) The head of the contracting activity has determined, based upon a preponderance of the evidence, that the Contractor or someone acting for the Contractor has engaged in conduct constituting an offense punishable under subsections 27(e)(1) of the Act.

(b) If the Government rescinds the contract under paragraph (a) of this clause, the Government is entitled to recover, in addition to any penalty prescribed by law, the amount expended under the contract.

(c) The rights and remedies of the Government specified herein are not exclusive, and are in addition to any other rights and remedies provided by law, regulation, or under this contract.

52.203–9 [Reserved]

26. Section 52.203–9 is removed and reserved.

27. Section 52.203–10 is amended by revising the heading and date of the clause and paragraphs (a) and (b)(5) to read as follows:

52.203–10 Price or Fee Adjustment for Illegal or Improper Activity.

* * * * *

Price or Fee Adjustment for Illegal or Improper Activity (Date)

(a) The Government, at its election, may reduce the price of a fixed-price type contract and the total cost and fee under a cost-type contract by the amount of profit or fee determined as set forth in paragraph (b) of this clause if the head of the contracting activity or designee determines that there was a violation of subsection 27(a), (b), or (c) of the Office of Federal Procurement Policy Act, as amended (41 U.S.C. 423), as implemented in the FAR.

* * * * *

(b) * * *

(5) For firm-fixed-price contracts, by 10 percent of the initial contract price or a profit amount determined by the Contracting Officer from records or documents in existence prior to the date of the contract award.

* * * * *

52.203–13 [Reserved]

28. Section 52.203–13 is removed and reserved.

52.212–3 [Amended]

29. Section 52.212–3 is amended by revising the date of the provision to read ''(DATE)''; and removing paragraph (i).

PART 53–FORMS

53.203 [Reserved]

30. Section 53.203 is removed and reserved.

53.302–333 [Removed]

31. Section 53.302–333 is removed.

[FR Doc. 96–22744 Filed 9–5–96; 8:45 am]

BILLING CODE 6820–EP–P

federal register

Friday
September 6, 1996

Part VII

Department of Education

34 CFR Part 682

Federal Family Education Loan Program; Proposed Rule

DEPARTMENT OF EDUCATION

34 CFR Part 682

RIN 1840–AC35

Federal Family Education Loan Program

AGENCY: Department of Education.

ACTION: Notice of proposed rulemaking.

SUMMARY: The Secretary proposes to amend the regulations governing the Federal Family Education Loan (FFEL) Program. The FFEL regulations govern the Federal Stafford Loan Program, the Federal Supplemental Loans for Students (Federal SLS) Program, the Federal PLUS Program, and the Federal Consolidation Loan Program, collectively referred to as the Federal Family Education Loan Program. The Secretary is proposing to make changes to the due diligence requirements for lenders and guaranty agencies participating in the FFEL Program.

DATES: Comments must be received on or before November 5, 1996.

ADDRESSES: All comments concerning these proposed regulations should be addressed to Pamela A. Moran, U.S. Department of Education, Post Office Box 23272, Washington, DC 20026–3272. Comments may also be sent through the internet to due__diligence@ed.gov.

To ensure that public comments have maximum effect in developing the final regulations, the Department urges that each comment clearly identify the specific section or sections of the regulations that the comment addresses and that comments be in the same order as the regulations.

Comments that concern information collection requirements must be sent to the Office of Management and Budget at the address listed in the Paperwork Reduction Act section of this preamble. A copy of those comments may also be sent to the Department representative named in the preceding paragraph.

FOR FURTHER INFORMATION CONTACT: Ron Streets, Program Specialist, Loans Branch, Policy Development Division, Policy, Training, and Analysis Service, U.S. Department of Education, 600 Independence Avenue, S.W. (room 3053, ROB–3), Washington, DC 20202–5449. Telephone: (202) 708–8242. Individuals who use a telecommunications device for the deaf (TDD) may call the Federal Information Relay Service (FIRS) at 1–800–877–8339 between 8 a.m. and 8 p.m., Eastern time, Monday through Friday.

SUPPLEMENTARY INFORMATION:

Background

The Secretary is proposing to amend 34 CFR Part 682 of the Department's regulations to improve the administration and the integrity of the FFEL Program. By improving program efficiency, these proposed regulations will reduce burden for lenders and improve the collection of outstanding FFEL loans and potential liabilities owed to the Secretary.

Proposed Regulatory Changes

The Secretary proposes to amend the following sections of the regulations to reflect changes needed to improve the due diligence provisions in the FFEL Program.

Section 682.401 Basic Program Agreement

The Secretary proposes to amend § 682.401(b)(27) by codifying the interpretation outlined in the Department's Dear Colleague Letter 95–G–286 dated November 1995, to permit guaranty agencies to retain collection costs totaling up to 18.5 percent of the outstanding principal and accrued interest of a defaulted FFEL loan that is repaid by a consolidation loan as long as their collection costs are included in the payoff amount certified by the guaranty agency.

Section 682.404 Federal Reinsurance Agreement

The Secretary proposes to amend § 682.404(a)(2)(ii) by requiring guaranty agencies to offer preclaims assistance to lenders no later than the 75th day of delinquency. Currently, the regulations do not include an explicit deadline by which the guaranty agencies must provide this service and some agencies have not provided preclaims assistance on a timely basis. This proposal would create uniformity in the treatment of delinquent borrowers and ensure that preclaims is initiated early enough to successfully avert default.

This section is also amended to require guaranty agencies, as part of their preclaims assistance to lenders, to provide counseling and written consumer information to the borrower by the 100th day of delinquency informing the borrower of the option to consolidate student loans under the FFEL Program or the Federal Direct Consolidation Loan Program to avoid default. The Secretary believes that providing this information to delinquent borrowers during the preclaims assistance process will help reduce defaults by ensuring that borrowers have information regarding consolidation when it is critically needed. Failure of the agency to provide this information would constitute a violation of due diligence in servicing a loan.

This section is further amended to require that payments made by a borrower on a defaulted loan to a guaranty agency must be first applied to the agency's collection costs attributable to that payment on the loan and then to reinsured interest and principal. This amendment will ensure that the borrower remains responsible for paying collection costs as required by section 484A(b) of the Higher Education Act of 1965, as amended. The Secretary also solicits particular comment on whether a guaranty agency should be allowed to apply the borrower's payment to incidental charges such as late charges first, after collection charges, rather than only after all principal and interest as is currently the case.

Section 682.410 Fiscal, Administrative, and Enforcement Requirements

The Secretary proposes to amend § 682.410(b)(2) that governs the amount of collection charges guaranty agencies may charge the borrower. These regulations propose to require guaranty agencies to assess a defaulted borrower the same amount of collection charges assessed by the Department for loans held by the Department. The collection rate currently assessed by the Department is 25 percent. The Secretary believes that standardization of collection costs across the industry will both reduce confusion and ensure equitable treatment for borrowers whose FFEL loans are guaranteed by multiple guaranty agencies. The Secretary will inform guaranty agencies annually what the applicable rate is in sufficient time for agencies to make necessary system changes. However, the Secretary solicits additional comment on whether agencies should be provided with the flexibility to assess less than the Department's collection rate if the agency's actual costs of collection support this.

The Secretary also proposes to amend § 682.410(b)(6)(vii)(A) that currently provides guaranty agencies the option of either initiating wage garnishment or instituting a civil suit against the borrower whose loans have defaulted. These proposed regulations remove that option and instead require that guaranty agencies initiate wage garnishment proceedings if the borrower has sufficient income. If the agency determines that the borrower has insufficient income to satisfy the debt by garnishment, but has assets from

which the debt can be satisfied, the guaranty agency will be required to assign the debt to the Department so the Secretary can file a civil suit against the borrower. The Department intends to litigate assigned accounts through the Department of Justice in order to place a lien against the borrower's assets to satisfy the debt. The Secretary believes that this change will result in more effective collection of defaulted loans across the country because guaranty agencies have had varying success in collecting loans through litigation.

Section 682.411 Due Diligence by Lenders in the Collection of Guaranty Agency Loans

The Secretary proposes to amend § 682.411(c) to expand the length of time from 1–10 days delinquent to 1–15 days delinquent that lenders will have to send the first written notice or collection letter to a delinquent borrower. This change will afford the lender additional time to receive payments from a delinquent borrower before it has to send out the first warning of delinquency to that borrower. This reduces the lender's burden of beginning the due diligence process prematurely for delinquent borrowers whose payments are received within the maximum proposed 15-day period.

The Secretary also proposes to amend § 682.411(d)(2) to modify the requirements for the two collection letters that must be sent to a borrower during the period of 16–180 days delinquent (16–240 days delinquent for a loan repayable in installments less frequently than monthly) to include additional warnings to the borrower that the guaranty agency may: (1) Institute proceedings to offset other payments made by the federal government to the borrower; and (2) assign the loan to the federal government for litigation against the borrower.

Section 682.413 Remedial Actions

Section 682.413(b) is amended to expand the possible remedial action available to the Secretary if a guaranty agency fails to meet the requirements of § 682.410 to include mandatory assignment of FFEL loans to the Department at the Secretary's discretion. Currently the only penalty available to the Secretary is loss of reinsurance. The Secretary does not believe that this is always in the best interest of the program.

Executive Order 12866

1. Assessment of Costs and Benefits

These proposed regulations have been reviewed in accordance with Executive Order 12866. Under the terms of the Order the Secretary has assessed the potential costs and benefits of this regulatory action.

The potential costs associated with the proposed regulations are those determined by the Secretary to be necessary for administering this program effectively and efficiently. Burdens specifically associated with information collection requirements, if any, are identified and explained elsewhere in this preamble under the heading Paperwork Reduction Act of 1995.

In assessing the potential costs and benefits—both quantitative and qualitative—of these proposed regulations, the Secretary has determined that the benefits of the regulations justify the costs.

The Secretary has also determined that this regulatory action does not unduly interfere with State, local, and tribal governments in the exercise of their governmental functions.

To assist the Department in complying with the specific requirements of Executive Order 12866, the Secretary invites comment on whether there may be further opportunities to reduce any potential costs or increase potential benefits resulting from these proposed regulations without impeding the effective and efficient administration of the program.

2. Clarity of the Regulations

Executive Order 12866 requires each agency to write regulations that are easy to understand.

The Secretary invites comments on how to make these proposed regulations easier to understand, including answers to questions such as the following: (1) Are the requirements in the proposed regulations clearly stated? (2) Do the regulations contain technical terms or other wording that interferes with their clarity? (3) Does the format of the regulations (grouping and order of sections, use of headings, paragraphing, etc.) aid or reduce their clarity? Would the regulations be easier to understand if they were divided into more (but shorter) sections? (A ''section'' is preceded by the symbol ''§'' and a numbered heading; for example, § 682.413 Remedial action.) (4) Is the description of the regulations in the **SUPPLEMENTARY INFORMATION** section of this preamble helpful in understanding the regulations? (5) What else could the Department do to make the regulations easier to understand?

A copy of any comments that concern how the Department could make these proposed regulations easier to understand should be sent to Stanley M. Cohen, Regulations Quality Officer, U.S. Department of Education, 600 Independence Avenue S.W. (Room 5100, FB–10), Washington, DC 20202–2241.

Regulatory Flexibility Act Certification

The Secretary certifies that these proposed regulations would not have a significant economic impact on a substantial number of small entities.

According to the U.S. Small Business Administration Size Standards, small entities affected by these regulations are lenders with assets below $100,000,000. Two provisions of these regulations affect small (and large) lenders. The first could provide a positive economic benefit to small (and large) lenders by providing additional flexibility for regulatory compliance. This provision does not impose a significant adverse economic impact. The second provision would impose minor economic costs on small (and large) lenders by requiring them to modify two letters sent to delinquent borrowers. These letters are required by existing regulations. These additional costs would not have a significant adverse economic impact. This activity would protect the Federal fiscal interest as well as the interests of the borrowers under the programs.

The Secretary particularly requests comments from small lenders on whether the proposed changes would have a significant economic impact on them.

Paperwork Reduction Act of 1995

Section 682.411 contains information collection requirements. As required by the Paperwork Reduction Act of 1995 (44 U.S.C. 3507(d)), the Department of Education has submitted a copy of this section to the Office of Management and Budget (OMB) for its review.

Collection of Information: Federal Family Education Loan Program

These regulations strengthen the collectibility of delinquent FFEL loans by participating lenders. Monies collected under these regulations enable new and continuing students to borrow to help defray the cost of education.

The public reporting and recordkeeping burden for this collection of information is estimated to be 3,398.31 hours in order to make the necessary system changes to: (1) add additional warnings to the existing collection letters sent to delinquent borrowers and (2) increasing the period

of time lenders will have to send the first written notice or collection letter to a delinquent borrower. This is a one-time activity.

The estimated burden for incorporating the additional warning paragraphs into the existing collection letters was calculated as follows:

Respondents		5,829
Responses	×	1
Hours per respondent.	×	0.083 (5 minutes)
Annual reporting burden.		483.81 hours

The estimated burden associated with expanding the window regarding when the first collection letter is sent to a delinquent borrower was calculated as follows:

Respondents ...		5,829
Responses	×	1
Hours per respondent.	×	0.5 (30 Minutes)
Annual reporting burden.		2,914.50 hours

Total annual burden hours=3,398,31

Organizations and individuals desiring to submit comments on the information collection requirements should direct them to the Office of Information and Regulatory Affairs, OMB, Room 10235, New Executive Office Building, Washington, D.C. 20503; Attention: Desk Officer for U.S. Department of Education.

The Department considers comments by the public on this proposed collection of information in—

- Evaluating whether the proposed collection of information is necessary for the proper performance of the functions of the Department, including whether the information will have a practical use;
- Evaluating the accuracy of the Department's estimate of the burden of the proposed collection of information, including the validity of the methodology and assumptions used;
- Enhancing the quality, usefulness, and clarity of the information to be collected; and
- Minimizing the burden of collection of information on those who are to respond, including through the use of appropriate automated electronic, mechanical, or other technological collection techniques or other forms of information technology; e.g., permitting electronic submission of responses.

OMB is required to make a decision concerning the collection of information contained in these proposed regulations between 30 and 60 days after publication of this document in the Federal Register. Therefore, a comment to OMB is best assured of having its full effect if OMB receives it within 30 days of publication. This does not affect the deadline for the public to comment to the Department on the proposed regulations.

Invitation To Comment

Interested persons are invited to submit comments and recommendations regarding these proposed regulations.

All comments submitted in response to these proposed regulations will be available for public inspection, during and after the comment period, in room 3053, Regional Office Building 3, 7th and D Streets, S.W., Washington, DC between the hours of 8:30 a.m. and 4 p.m., Monday through Friday of each week except federal holidays.

Assessment of Educational Impact

The Secretary particularly requests comments on whether the proposed regulations in this document would require transmission of information that is being gathered by or is available from any other agency or authority of the United States.

List of Subjects in 34 CFR Part 682

Administrative practice and procedure, Colleges and universities, Education, Loan programs-education, Reporting and recordkeeping requirements, Student aid, Vocational education.

Dated: July 31, 1996.

Richard W. Riley,

Secretary of Education.

(Catalog of Federal Domestic Assistance Number 84.032, Federal Family Education Loan Program)

The Secretary proposes to amend part 682 of title 34 of the Code of Federal Regulations as follows:

PART 682—FEDERAL FAMILY EDUCATION LOAN (FFEL) PROGRAM

1. The authority citation for part 682 continues to read as follows:

Authority: 20 U.S.C. 1071 to 1087–2, unless otherwise noted.

2. Section 682.401 is amended by revising paragraph (b)(27) to read as follows:

§ 682.401 Basic program agreement.

* * * * *

(b) * * *

(27) *Collection Charges and Late Fees on Defaulted FFEL loans being Consolidated.* (i) A guaranty agency may add collection costs in an amount not to exceed 18.5 percent of the outstanding principal and interest to a defaulted FFEL Program loan that is included in a Federal Consolidation loan.

(ii) When returning the proceeds from the consolidation of a defaulted loan to the Secretary, a guaranty agency may only retain the amount added to the borrower's balance pursuant to paragraph (b)(27)(i) of this section.

* * * * *

3. Section 682.404 is amended by revising paragraph (a)(2)(ii) and paragraph (f) to read as follows:

§ 682.404 Federal reinsurance agreement.

* * * * *

(a) * * *

(2) * * *

(ii) *Preclaims assistance* means collection assistance made available to the lender by the guaranty agency no later than the 75th day of delinquency. This assistance must include collection activities that are at least as forceful as the level of preclaims assistance performed by the guaranty agency as of October 16, 1990, and involves the initiation by the guaranty agency of at least 3 collection activities, one of which is a letter designed to encourage the borrower to begin or resume repayment. As part of their preclaims assistance, guaranty agencies must provide counseling and written consumer information to the borrower by the 100*th* day of delinquency informing the borrower of the borrower's option to consolidate the defaulted loan under the FFEL Program or the Federal Direct Consolidation Loan Program to avoid default. Failure of the agency to provide this information constitutes a violation of the guaranty agency's obligation to perform due diligence in collecting a loan; and

* * * * *

(f) *Application of borrower payments.* A payment made to a guaranty agency by a borrower must be applied first to the collection costs due only for the amount collected in the particular payment month on the loan and then to reinsured interest and then to principal. The borrower's payments may be applied to other incidental charges, such as late charges, only after the repayment of all principal and interest.

* * * * *

4. Section 682.410 is amended by revising paragraphs (b)(2) and (b)(6)(vii)(A) to read as follows:

§ 682.410 Fiscal, administrative, and enforcement requirements.

* * * * *

(b) * * *

(2) *Collection charges.* Whether or not provided for in the borrower's promissory note, the guaranty agency

shall charge a borrower an amount equal to reasonable costs incurred by the agency in collecting a loan on which the agency has paid a default or bankruptcy claim. These costs may include, but are not limited to, all attorney's fees, collection agency charges, and court costs. The amount charged a borrower must equal the amount the same borrower would be charged for the cost of collection if the loan was held by the U.S. Department of Education.

* * * * *

(6) * * *

(vii) * * *

(A) Except as provided in paragraph (b)(6)(vii)(B) of this section, during this period but not sooner than 30 days after sending the notice described in paragraph (b)(5)(vi) of this section, the agency shall initiate proceedings to offset the borrower's state and federal income tax refunds and other payments made by the federal government to a borrower, and shall initiate wage garnishment proceedings against the borrower by the 225th day. If the agency determines that the borrower has insufficient income to satisfy the debt through wage garnishment, but has assets from which the debt can be satisfied, the agency shall assign the loan to the Department by the 545th day.

* * * * *

5. Section 682.411 is amended by revising paragraphs (c) and (d) to read as follows:

§ 682.411 Due diligence by lenders in the collection of guaranty agency loans.

* * * * *

(c) *1–15 days delinquent:* Except in the case where a loan is brought into this period by a payment on the loan, expiration of an authorized deferment or forbearance period, or the lender's receipt from the drawee of a dishonored check submitted as a payment on the loan, the lender during this period shall send at least one written notice or collection letter to the borrower informing the borrower of the delinquency and urging the borrower to make payments sufficient to eliminate the delinquency. The notice or collection letter sent during this period must include, at a minimum, information for the borrower regarding loan consolidation, forbearance and other available options to avoid default.

(d) *16–180 days delinquent (16–240 days delinquent for a loan repayable in installments less frequent than monthly):* (1) Unless exempted under paragraph (d)(4) of this section, during this period the lender shall engage in at least four diligent efforts to contact the borrower by telephone and send at least four collection letters urging the borrower to make the required payments on the loan. At least one of the diligent efforts to contact the borrower by phone must occur before, and another one must occur after, the 90th day of delinquency.

(2) At least two of the collection letters required under paragraph (d)(1) of this section must warn the borrower that if the loan is not paid, the lender will assign the loan to the guaranty agency that, in turn, will report the default to all national credit bureaus, and that the agency may institute proceedings to offset the borrower's state and federal income tax refunds and other payments made by the federal government to a borrower or to garnish the borrower's wages, or assign the loan to the federal government for litigation against the borrower.

* * * * *

6. Section 682.413 is amended by redesignating paragraph (b) as paragraph (b)(1) and adding a new paragraph (b)(2) to read as follows:

§ 682.413 Remedial actions.

* * * * *

(b)(1) The Secretary requires a guaranty agency to repay reinsurance payments received on a loan if the lender, third-party servicer, if applicable, or the agency fails to meet the requirements of § 682.406(a).

(2) The Secretary may require a guaranty agency to repay reinsurance payments received on a loan or to assign FFEL loans to the Department if the agency fails to meet the requirements of § 682.410.

* * * * *

[FR Doc. 96–22812 Filed 9–5–96; 8:45 am]

BILLING CODE 4000–01–P

federal register

Friday
September 6, 1996

Part VIII

Department of Housing and Urban Development

24 CFR Part 573

Loan Guarantee Recovery Fund; Final Rule

DEPARTMENT OF HOUSING AND URBAN DEVELOPMENT

24 CFR Part 573

[Docket No. FR–4108–F–01]

RIN 2506–AB87

Office of the Assistant Secretary for Community Planning and Development; Loan Guarantee Recovery Fund

AGENCY: Office of the Assistant Secretary for Community Planning and Development, HUD.

ACTION: Final rule.

SUMMARY: The Church Arson Prevention Act of 1996 (the Act) authorizes certain Federal departments to implement procedures to address the destructive consequences of acts of arson and terrorism carried out against places of worship. Section 4 of the Act directs HUD to publish regulations governing the provision of loan guarantees to financial institutions that make loans to certain nonprofit organizations adversely affected by such acts. This final rule implements section 4 of the Act. Specifically, this rule establishes the procedures, terms, and conditions by which HUD will guarantee loans to assist nonprofit organizations in financing activities designed to rebuild and rehabilitate structures, to replace and restore personal property, and to finance other eligible activities as provided for in this final rule. In addition, HUD anticipates forming a cooperative venture and participating with other entities in the pooling of funds so as to better achieve the objectives of the Act and this final rule.

EFFECTIVE DATE: These regulations take effect on October 7, 1996, unless prior to this date HUD publishes a notice in the Federal Register announcing an earlier effective date. Affected parties do not have to comply with the information collection requirements in §§ 573.6, 573.7, 573.8, and 573.11 until HUD publishes in the Federal Register the control numbers assigned by the Office of Management and Budget (OMB) to these information collection requirements. Publication of the control numbers notifies the public that OMB has approved these information requirements under the Paperwork Reduction Act of 1995.

FOR FURTHER INFORMATION CONTACT: Tony Johnston, Deputy Director, Financial Management Division, Office of Block Grant Assistance, Room 7180, Department of Housing and Urban Development, 451 Seventh Street, SW., Washington, DC 20410, telephone number (202) 708–1871. Hearing- or speech-impaired individuals may access this number via TTY by calling the Federal Information Relay Service at 1–800–877–8399. FAX inquiries may be sent to Mr. Johnston at (202) 708–1798. (Other than the ''800'' number, the telephone numbers are not toll-free.)

SUPPLEMENTARY INFORMATION:

I. Background

On July 3, 1996, President Clinton signed into law the ''Church Arson Prevention Act of 1996'' (Pub. L. 104–155) (the Act). In passing this legislation, the Congress made the following findings:

The Congress finds the following:

(1) The incidence of arson or other destruction of vandalism of places of religious worship, and the incidence of violent interference with an individual's lawful exercise or attempted exercise of the right of religious freedom at a place of religious worship pose a serious national problem.

(2) The incidence of arson of places of religious worship has recently increased, especially in the context of places of religious worship that serve predominantly African-American congregations.

(3) Changes in Federal law are necessary to deal properly with this problem.

(4) Although local jurisdictions have attempted to respond to the challenges posed by such acts of destruction or damage to religious property, the problem is sufficiently serious, widespread, and interstate in scope to warrant Federal intervention to assist State and local jurisdictions.

(5) Congress has authority, pursuant to the Commerce Clause of the Constitution, to make acts of destruction or damage to religious property a violation of Federal law.

(6) Congress has authority, pursuant to section 2 of the 13th amendment to the Constitution, to make actions of private citizens motivated by race, color, or ethnicity that interfere with the ability of citizens to hold or use religious property without fear of attack, violations of Federal criminal law.

The Act provides Federal, State and local law-enforcement agencies with the needed additional tools to address violent crimes against places of worship, strengthens the penalties for these crimes, and authorizes Federal assistance for rebuilding efforts. Section 4 of the Act, entitled ''Loan Guarantee Recovery Fund,'' authorizes the Secretary of HUD to guarantee loans made by financial institutions to assist certain nonprofit organizations (organizations described in section 501(c)(3) of the Internal Revenue Code of 1986) that have been damaged as a result of acts of arson or terrorism. The Act provides that loans shall be guaranteed in accordance with procedures that the Secretary shall establish by regulation.

This final rule implements section 4 of the Act by establishing a new 24 CFR part 573. Part 573 describes the procedures, terms, and conditions by which HUD will guarantee loans to assist eligible nonprofit organizations. Under § 573.3 of this final rule, eligible borrowers may use guaranteed loan funds for a wide range of activities, including: (1) the acquisition of real or personal property; (2) the rehabilitation of real property; (3) the construction, reconstruction or replacement of real property improvement; (4) clearance, demolition, and removal of structures, fixtures, and improvements; (5) site preparation; (6) architectural, engineering, and security expenses; and (7) refinancing existing indebtedness. The term of a loan guaranteed by HUD under new 24 CFR part 573 may not exceed 20 years.

II. Justification for Final Rulemaking

HUD generally publishes a rule for public comment before issuing a rule for effect, in accordance with its own regulations on rulemaking in 24 CFR part 10. Part 10 provides for exceptions to the general rule if the agency finds good cause to omit advance notice and public participation. The good cause requirement is satisfied when prior public procedure is ''impracticable, unnecessary, or contrary to the public interest'' (24 CFR 10.1). HUD finds that good cause exists to publish this rule for effect without first soliciting public comment.

The purpose of this rule is to implement the authority provided by the Congress for HUD to guarantee loans made by financial institutions to certain nonprofit organizations that suffer damage to their property as a result of acts of arson or terrorism. The Department of Justice has identified more than 40 eligible organizations that have had property damaged or destroyed through acts of arson or terrorism within the last few months. These organizations are in immediate need of assistance to rebuild and restore their properties. Financial institutions are willing to assist these organizations in their rebuilding efforts, provided a certain level of assurance exists with respect to the repayment of the loans to be made. The loan guarantee recovery fund established by this final rule provides the necessary assurance. Accordingly, HUD believes that it would be contrary to the public interest to delay the effectiveness of the rule to solicit comment.

Before issuance of this rule, HUD held meetings with representatives of 501(c)(3) organizations that have been damaged by arson or terrorism, as well

as with financial institutions, State and local organizations, and other public agencies. This rule incorporates many of the comments and suggestions offered by these organizations and entities. Although this rule is being issued in final form, additional public comments on this regulation are welcome on a continuing basis. These additional comments will be beneficial to any future loan guarantee authority provided to HUD. Interested persons are invited to submit comments regarding the final rule to the Office of the General Counsel, Rules Docket Clerk, Room 10276, Department of Housing and Urban Development, 451 Seventh Street, SW, Washington, DC 20410–0500. Communications should refer to the above docket number and title. Facsimile (FAX) comments are not acceptable. A copy of each communication submitted will be available for public inspection and copying during regular business hours (7:30 a.m. to 5:30 p.m. Eastern Time) at the above address.

III. Findings and Certifications.

Paperwork Reduction Act Statement. The information collection requirements contained in §§ 573.6, 573.7, 573.8, and 573.11 have been submitted to the Office of Management and Budget (OMB) for emergency review and approval under the Paperwork Reduction Act of 1995 (44 U.S.C. 3501–3520). *An agency may not conduct or sponsor, and a person is not required to respond to, a collection of information unless the collection displays a valid control number.* The OMB control number, when assigned, will be announced by separate notice in the Federal Register.

Executive Order 12866, Regulatory Planning and Review. This final rule was reviewed by the Office of Management and Budget (OMB) under Executive Order 12866, *Regulatory Planning and Review.* OMB determined that this rule is a ''significant regulatory action,'' as defined in section 3(f) of the Order (although not economically significant under section (3)(f)(1) of the Order). Any changes made to the final rule subsequent to its submission to OMB are clearly identified in the docket file, which is available for public inspection in the office of the Department's Rules Docket Clerk, Room 10276, 451 Seventh Street SW, Washington Dc, 20410.

Unfunded Mandates Reform Act. The Secretary has reviewed this rule before publication and by approving it certified, in accordance with the Unfunded Mandates Reform Act of 199 (2 U.S.C. 1532), that this rule does not impose a Federal mandate that will result in the expenditure by State, local, and tribal governments, in the aggregate, or by the private sector, of $100 million or more in any one year.

Regulatory Flexibility Act. The Secretary, in accordance with the Regulatory Flexibility Act (5 U.S.C. 605(b)), has reviewed and approved this final rule, and in so doing certifies that this final rule will not have a significant economic impact on a substantial number of small entities. The purpose of this rule is to assist certain nonprofit organizations that experience damage to their real and personal property as a result of acts of arson or terrorism. All qualified financial institution, are eligible to apply for loan guarantees under this rule.

Environmental Impact. A Finding of No Significant Impact with respect to the environment was made in accordance with HUD's regulations at 24 CFR part 50, which implement section 102(2)(C) of the National Environmental Policy Act of 1969. The Finding of No Significant Impact is available for public inspection between 7:30 a.m. and 5:30 p.m. weekdays in the Office of General Counsel, the Rules Docket Clerk, Room 10276, 451 Seventh Street, SW, Washington, DC 20410.

Executive Order 12612, Federalism. The General Counsel, as the Designated Official under section 6(a) of Executive Order 12612, *Federalism*, has determined that this rule will not have substantial direct effects on States or their political subdivisions, or the relationship between the Federal Government and the States, or on the distribution of power and responsibilities among the various levels of Government. No programmatic or policy changes will result from this document's promulgation that would affect the relationship between the Federal Government and State and local governments.

Executive Order 12606, The Family. The General Counsel, as the Designated Official under section 6(a) of Executive Order 12606, *The Family*, has determined that this rule will not have potential for significant impact on family formation, maintenance, or general well-being, and thus is not subject to review under the Order. No significant change in existing HUD policies or programs, as those policies relate to the family, will result from promulgation of this final rule.

List of Subjects in 24 CFR Part 573

Loan programs—housing and community development, Nonprofit organizations, Reporting and recordkeeping requirements.

Accordingly, title 24 of the Code of Federal Regulations is amended as follows:

1. A new part 573 is added to read as follows:

PART 573—LOAN GUARANTEE RECOVERY FUND

Sec.

573.1 Authority and purpose.
573.2 Definitions.
573.3 Eligible activities.
573.4 Loan term.
573.5 Underwriting standards and availability of loan guarantee assistance.
573.6 Submission requirements.
573.7 Loan guarantee agreement.
573.8 Environmental procedures and standards.
573.9 Other requirements.
573.10 Fees for guaranteed loans.
573.11 Record access and recordkeeping.

Authority: Pub. L. 104–155, 110 Stat. 1392, 18 U.S.C. 241 note; 42 U.S.C. 3535(d).

§ 573.1 Authority and purpose.

Section 4 of the Church Arson Prevention Act of 1996 (Pub. L. 104–155, approved July 3, 1996) authorizes HUD to guarantee loans made by financial institutions to certain nonprofit organizations to finance activities designed to remedy the damage and destruction to real and personal property caused by acts of arson or terrorism. This part establishes the general procedures and requirements that apply to HUD's guarantee of these loans.

§ 573.2 Definitions.

The following definitions are only applicable to loan guarantees under this part, and are not criminal definitions.

Act means ''The Church Arson Prevention Act of 1996'' (Pub. L. 104–155, approved July 3, 1996).

Arson means a fire or explosion causing damage to (or destruction of) real or personal property that a Qualified Certification Official determines, or reasonably believes, to be deliberately set.

Borrower means an organization described in section 501(c)(3) of the Internal Revenue Code of 1986, as amended, whose property has been damaged or destroyed as a result of an act of arson or terrorism and that incurs a debt obligation to a financial institution for the purpose of carrying out activities eligible under his part.

Financial Institution means a lender which may be a bank, trust company, savings and loan association, credit union, mortgage company, or other issuer regulated by the Federal Deposit Insurance Corporation, the Office of Thrift Supervision, the Credit Union Administration, or the U.S. Comptroller

of the Currency. A Financial Institution may also be a Pension Fund.

Guarantee means an obligation of the United States Government guaranteeing payment of the outstanding principal loan amount, in whole or in part, plus interest thereon, on a debt obligation of the Borrower to a Financial Institution upon failure of the Borrower to repay the debt.

Guaranteed Loan Funds means funds received by the borrower from the Financial Institution to finance eligible activities under this part, the repayment of which is guaranteed by HUD.

Loan Guarantee Agreement means an agreement between a Financial Institution and the Secretary detailing the rights, responsibilities, procedures, terms, and conditions under which a loan provided by a Financial Institution to a Borrower may be guaranteed under section 4 of the Act.

Qualified Certification Official (QCO). (1) *For the purpose of certifying an act of arson.* A State or local official authorized to investigate possible acts of arson. For the purposes of this definition, such an official is authorized to execute an Official Incident Report or its equivalent and may be an official or employee of such agencies as the local fire department, the local police department, or the State Fire Marshall Office or its equivalent. The term ''Qualified Certification Official'' also includes HUD, which will consult with the Bureau of Alcohol, Tobacco, and Firearms of the Department of the Treasury in making its determinations.

(2) *For the purpose of certifying an act of terrorism.* The Secretary or his designee, in consultation with the Federal Bureau of Investigation, shall determine whether an act of violence is a terrorist act or is reasonably believed to be a terrorist act.

Section 4 Guaranteed Loan means a HUD guaranteed loan made by a Financial Institution to a Borrower for the purpose of carrying out eligible activities to address damage or destruction caused by acts of arson or terrorism.

Terrorism means an act of violence causing damage to (or destruction of) real or personal property that the Secretary or his designee, in consultation with the Federal Bureau of Investigation, determines to be, or reasonably believes to be, a terrorist act, as defined by applicable Federal law or guidelines.

§ 573.3 Eligible activities.

Guaranteed Loan Funds may be used by a Borrower for the following activities when it is certified in accordance with § 573.6(e) that the activity is necessary to address damage caused by an act or acts of arson or terrorism as certified in accordance with § 573.6(f):

(a) Acquisition of improved or unimproved real property in fee or under long term lease.

(b) Acquisition and installation of personal property.

(c) Rehabilitation of real property owner, acquired, or leased by the Borrower.

(d) Construction, reconstruction, or replacement of real property improvement.

(e) Clearance, demolition, and removal, including movement of structures to other sites, of buildings, fixtures and improvements on real property.

(f) Site preparation, including construction, reconstruction, or installation of site improvements, utilities, or facilities, which is related to the activities described in paragraphs (a), (c), or (d) of this section.

(g) Architectural, engineering, and similar services necessary to develop plans in connection with activities financed under paragraphs (a), (b), (c), or (d) of this section.

(h) Acquisition, installation and restoration of security systems.

(i) Loans for refinancing existing indebtedness secured by a property to be constructed, rehabilitated, or reconstructed, if such financing is determined to be appropriate to achieve the objectives of the Act and this part.

(j) Other necessary project costs such as insurance, bonding, legal fees, appraisals, surveys, relocation, closing costs, etc., paid or incurred by the Borrower in connection with the completion of the above activities.

§ 573.4 Loan term.

The term of the loan to be guaranteed by HUD under this part may not exceed 20 years.

§ 573.5 Underwriting standards and availability of loan guarantee assistance.

(a) HUD may, in its discretion, accept the underwriting standards of the Financial Institution making a loan to a Borrower.

(b) HUD will not make the loan guarantee unless it determines that the guaranteed loan is an acceptable financial risk under HUD's generally applicable loan underwriting standards based on the following:

(1) The Borrower's ability to pay debt service; and

(2) The value of the collateral assigned or pledged as security for the repayment of the loan.

(c) The provision of a loan guarantee to a Financial Institution and the amount of the guarantee do not depend in any way on the purpose, function, or identity of the organization to which the Financial Institution has made, or intends to make, a Section 4 Guaranteed Loan.

(d) HUD may disapprove a request for loan guarantee assistance based on the availability of funding.

(e) HUD may decline any Financial Institution's participation if its underwriting criteria are insufficient to make the guarantee an acceptable financial risk, or if the proposed interest rates or fees are unacceptable. HUD expects the proposed interest rates to take into account the value of the Federal guarantee.

(f) HUD may limit the availability of Guaranteed Loan Funds to geographic areas having the greatest need, as determined by a needs analysis of the most current available date conducted by HUD.

(g) Other requirements associated with the underwriting standards and guidelines shall be contained in the Loan Guarantee Agreement.

§ 573.6 Submission requirements.

A Financial Institution seeking a Section 4 Guaranteed Loan must submit to HUD the following documentation:

(a) A statement that the institution is a Financial Institution as defined at § 573.2.

(b) A statement that the Borrower is eligible as defined at § 573.2.

(c) A description of each eligible activity for which the loan is requested.

(d) A statement of other available funds to be used to finance the eligible activities (e.g., insurance proceeds).

(e) A certification by the Borrower that the activities to be assisted resulted from an act of arson or terrorism which is the subject of the certification described in paragraph (f) of this section.

(f) A certification by a QCO that the damage or destruction to be remedied by the use of the Guaranteed Loan Funds resulted from an act of arson or terrorism.

(g) The environmental documentation required by § 573.8.

(h) A narrative of the institution's underwriting standards used in reviewing the Borrower's loan request.

(i) The interest rate on the loan and fees the lender intends to use in connection with the loan; and

(j) The percentage of the loan for which a guarantee is requested.

§ 573.7 Loan guarantee agreement.

(a) The rights and responsibilities with respect to the guaranteed loan shall be substantially described in an

agreement entered into between the Financial Institution, as the lender, and the Secretary, as the guarantor, which agreement shall provide that:

(1) The lender has submitted or will submit a request for loan guarantee assistance that is accompanied by the Borrower's request for a loan to carry out eligible activities described in § 573.3;

(2) The lender will require the Borrower to execute a promissory note promising to repay the guaranteed loan in accordance with the terms thereof;

(3) The lender will require the Borrower to provide collateral security, to an extent and in a form, acceptable to HUD;

(4) HUD reserves the right to limit loan guarantees to loans financing the replacement of damaged property with comparable new property;

(5) The lender will follow certain claim procedures to be specified by HUD in connection with any defaults, including appropriate notification of default as required by HUD;

(6) The lender will follow procedures for payment under the guarantee whereby the lender will be paid (up to the amount of guarantee) the amount owed to the lender less any amount recovered from the underlying collateral security for the loan; and

(7) The lender will act as the fiscal agent for the loan, servicing the guaranteed loan, maintaining loan documents, and receiving the Borrower's payments of principal and interest. The Borrower and the lender may be required to execute a fiscal agency agreement.

(b) In addition, the agreement shall contain other requirements, terms, and conditions required or approved by HUD.

§ 573.8 Environmental procedures and standards.

The environmental review requirements at 24 CFR part 50 are applicable to this part.

(a) *Environmental procedures.* Before any lender's submission requesting a loan guarantee for the acquisition, rehabilitation, or construction of real property can be selected for a loan guarantee, HUD shall determine whether any environmental thresholds are exceeded in accordance with 24 CFR part 50, which implements the National Environmental Policy Act (NEPA) and the related Federal environmental laws and authorities listed under 24 CFR 50.4. To assist in complying with environmental requirements, Borrowers are encouraged to select sites that are free of environmental hazards and are to provide HUD with environmental data needed to make a determination of compliance. For successful Borrowers, the costs for preparing the environmental data are eligible as project costs.

(1) If HUD determines that one or more of the thresholds are exceeded, HUD shall conduct a compliance review of the issue and, if appropriate, establish mitigating measures that the applicant shall carry out for the property.

(2) The lender's submissions under § 573.6 shall provide HUD with:

(i) Documentation for environmental threshold review; and

(ii) Any previously issued environmental reviews prepared by local, State, or other Federal agencies for the proposed property.

(3) In providing the above information, the Borrower is encouraged to contact the local community development agency to obtain any previously issued environmental reviews for the proposed property as well as for other relevant information that can be used in the applicant documentation for the environmental threshold review.

(4) HUD reserves the right to disqualify any request where one or more environmental thresholds are exceeded if HUD determines that the compliance review cannot be satisfactorily completed.

(5) If Guaranteed Loan Funds are requested for acquisition, rehabilitation, or construction, Borrowers and Financial Institutions are prohibited from committing or expending State, local, or other funds to undertake property acquisition, rehabilitation or construction under this part until HUD issues a letter of commitment notifying the lender of HUD approval of the loan guarantee.

(b) *Environmental thresholds.* HUD shall determine whether a NEPA environmental assessment is required. Also, HUD shall determine whether the proposed property triggers thresholds for the applicable Federal environmental laws and authorities listed under 24 CFR 50.4 as follows:

(1) For minor rehabilitation of a building and acquisition of any property, Federal environmental laws and authorities may apply when the property is:

(i) Located within designated coastal barrier resources;

(ii) Contaminated by toxic chemicals or radioactive materials;

(iii) Located within a floodplain;

(iv) A building for which flood insurance protection is required;

(v) Located within a runway clear zone at a civil airport or within a clear zone or accident potential zone at a military airfield; or

(vi) Listed on, or eligible for listing on, the National Register of Historic Places; located within, or adjacent to, an historic district, or is a property whose area of potential effects includes a historic district or property.

(2) For major rehabilitation of a building or for new construction or rebuilding, and environmental assessment under NEPA is required and, in addition to paragraph (b)(1) (i) through (vi) of this section, other Federal environmental laws and authorities may apply when the property:

(i) Affects coastal zone management;

(ii) Is located near hazardous industrial operations handling fuels or chemicals of an explosive or flammable nature;

(iii) Affects a sole source aquifer;

(iv) Affects endangered species;

(v) Is located within a designated wetland; or

(vi) Is located in a high noise area.

(c) *Qualified data sources.* The environmental threshold information provided by applicants mut be from qualified data sources. A qualified data source means any Federal, State, or local agency with expertise or experience in environmental protection (e.g., the local community development agency; the local planning agency; the State environmental protection agency; or the State Historic Preservation Officer) or any other source qualified to provide reliable information on the particular property.

(d) *Definition.* Minor rehabilitation means proposed fixing and repairs:

(1) Whose estimated cost is less than 75 percent of the estimated cost of replacement after completion;

(2) That does not involve changes in land use from residential to nonresidential, or from nonresidential to residential; and

(3) In the case of residential properties, that does not increase density more than 20 percent.

(e) *Project consultants.* In achieving compliance with these procedures, Borrower's architectural and engineering consultants shall consider these environmental factors and provide information in their plan narratives as to how their construction plans conform with the above environmental factors. To facilitate HUD's compliance with party 50, the Borrower is required to submit the consultant's information and plan narrative discussing the pertinent environmental factors under this section.

§ 573.9 Other Requirements.

(a) *Nondiscrimination and equal opportunity.* The nondiscrimination and equal opportunity requirements described in 24 CFR part 5, subpart A apply to this part.

(b) *24 CFR part 84.* The provisions of 24 CFR part 84 apply to guaranteed loans under this part.

(c) *Lead-Based Paint.* Housing assisted under this part is subject to the lead-based paint requirements described in 24 CFR part 35.

(d) *Labor Standards.* (1) *Davis-Bacon.* All laborers and mechanics employed by contractors or subcontractors in the performance of construction work financed in whole or in part with Guaranteed Loan Funds under this part shall be paid wages at rates not less than those prevailing on similar construction in the locality as determined by the Secretary of Labor in accordance with the Davis-Bacon Act, as amended (40 U.S.C. 276a–276a–5). This paragraph shall apply to the rehabilitation of residential property only if such property contains not less than 8 units.

(2) *Volunteers.* The provisions of paragraph (d)(1) of this section shall not apply to volunteers under the conditions set forth in 24 CFR part 70. In applying part 70, loan guarantees under this part shall be treated as a program for which there is a statutory exemption for volunteers.

(3) *Labor standards.* Any contract, subcontract, or building loan agreement executed for a project subject to Davis-Bacon wage rates under paragraph (d)(1) of this section shall comply with all labor standards and provisions of 29 CFR parts 1, 3 and 5 that would be applicable to a loan guarantee program to which Davis-Bacon wage rates are made applicable by statute.

§ 573.10 Fees for guaranteed loans.

(a) No fees will be assessed by HUD for its guaranty of a loan under this part.

(b) The lender may assess the Borrower loan origination fees or other charges provided that such fees and charges are those charged by the lender to its other customers for similar transactions, and are no higher than those charged by the lender for similar transactions.

§ 573.11 Record Access and Recordkeeping.

Records pertaining to the loans made by the Financial Institution shall be held for the life of the loan. A lender with a Section 4 Guaranteed Loan shall allow HUD, the Comptroller General of the United States, and their authorized representatives access from time to time to any documents, papers or files which are pertinent to the guaranteed loan, and to inspect and make copies of such records which relate to any Section 4 Loan. Any inspection will be made during the lender's regular business hours or any other mutually convenient time.

Dated: September 5, 1996.

Howard Glaser,

Acting Assistant Secretary for Community Planning and Development.

[FR Doc. 96–23081 Filed 9–5–96; 2:54 pm]

BILLING CODE 4210–29–P

Reader Aids

Federal Register

Vol. 61, No. 174

Friday, September 6, 1996

CUSTOMER SERVICE AND INFORMATION

Federal Register/Code of Federal Regulations

General Information, indexes and other finding aids **202–523–5227**

Laws

Public Laws Update Services (numbers, dates, etc.) **523–6641**
For additional information **523–5227**

Presidential Documents

Executive orders and proclamations **523–5227**
The United States Government Manual **523–5227**

Other Services

Electronic and on-line services (voice) **523–4534**
Privacy Act Compilation **523–3187**
TDD for the hearing impaired **523–5229**

ELECTRONIC BULLETIN BOARD

Free Electronic Bulletin Board service for Public Law numbers, Federal Register finding aids, and list of documents on public inspection. **202–275–0920**

FAX-ON-DEMAND

You may access our Fax-On-Demand service. You only need a fax machine and there is no charge for the service except for long distance telephone charges the user may incur. The list of documents on public inspection and the daily Federal Register's table of contents are available using this service. The document numbers are 7050-Public Inspection list and 7051-Table of Contents list. The public inspection list will be updated immediately for documents filed on an emergency basis.

NOTE: YOU WILL ONLY GET A LISTING OF DOCUMENTS ON FILE AND NOT THE ACTUAL DOCUMENT. Documents on public inspection may be viewed and copied in our office located at 800 North Capitol Street, N.W., Suite 700. The Fax-On-Demand telephone number is: **301–713–6905**

FEDERAL REGISTER PAGES AND DATES, SEPTEMBER

46373–46528 3
46529–46698 4
46699–47018 5
47019–47408 6

CFR PARTS AFFECTED DURING SEPTEMBER

At the end of each month, the Office of the Federal Register publishes separately a List of CFR Sections Affected (LSA), which lists parts and sections affected by documents published since the revision date of each title.

3 CFR

Administrative Orders:

Memorandums:
August 30, 1996 46695
Presidential Determinations:
No. 96–42 of August 24, 1996 46699
No. 96–43 of August 27, 1996 46529

4 CFR

Proposed Rules:
7 47240

5 CFR

317 46531
412 46531

7 CFR

12 47019
911 46701
915 46701
1075 47038
Proposed Rules:
457 46401
1079 46571
1137 47092
1160 47093

8 CFR

3 46373
103 .....46373, 47039
210 46534
242 46373
245a 46534
264 46534
274a 46534
299 46534

10 CFR

Ch. 1 46537

12 CFR

3 47358
208 47358
225 47358
325 47358
Proposed Rules:
225 47242

14 CFR

39 .....46538, 46540, 46541, 46542, 46703, 46704, 47041, 47046, 47047, 47049, 47051
71 .....47051, 47052, 47053
97 .....46706, 46707, 46711
1215 46713
Proposed Rules:
39 .....46572, 46574, 46576, 46742
71 .....46743, 46744

20 CFR

655 46988

21 CFR

136 46714
137 46714
139 46714
173 .....46374, 46376
177 .....46543, 46716
178 .....46544, 46545
510 46547
520 46719
522 46548

22 CFR

Proposed Rules:
514 46745

24 CFR

247 47380
573 47404
880 47380
884 47380
3500 46510
Proposed Rules:
3500 46523

26 CFR

1 46719
602 46719

27 CFR

Proposed Rules:
9 46403
178 47095

28 CFR

0 46720

29 CFR

506 46988

30 CFR

935 46548
944 46550
946 46552
Proposed Rules:
917 46577

32 CFR

706 46378
801 46379

33 CFR

165 47054

34 CFR

Proposed Rules:
682 47398

35 CFR

Proposed Rules:
133 46407

135 46407

36 CFR

1 46554
7 46379
15 46554

38 CFR

4 46720

40 CFR

52 ....47055, 47057, 47058
63 46906
81 47058
82 47012
261 46380
300 47060
Proposed Rules:
35 46748
52 ....47099, 47100
59 46410
64 46418
70 46418
71 46418
81 47100
270 46748
271 46748
300 ....46418, 46749, 46753

42 CFR

417 46384
Proposed Rules:
418 46579

44 CFR

64 46732

45 CFR

2400 46734

46 CFR

10 47060
12 47060

47 CFR

1 46557
25 46557
51 47284
52 47284
73 46563
80 46563
95 46563
Proposed Rules:
Ch. 1 46419
1 ....46420, 46603, 46755
22 46420
25 46420
73 ....46430, 46755

48 CFR

1506 47064
1515 47065
1534 47064
1536 47064
1542 47064
1545 47064
1552 ....47064, 47065
1807 47068
1808 47068
1809 47068
1810 47068
1811 47068
1812 47068
1814 47068
1828 47068
1835 47068
1842 47068
1845 47082
1852 ....47068, 47082
1853 47082
1871 47068
Proposed Rules:
1 47390
3 47390
4 47390
5 47384
9 47390
11 47384
12 ....47384, 47390
13 47384
14 47390
15 47390
19 47390
33 47390
37 47390
43 47390
52 ....47384, 47390
53 47390
203 47100
212 47101
215 47100
219 47101
225 47101
226 47101
227 47101
233 47101
252 ....47100, 47101
501 46607
504 46607
507 46607
510 46607
511 46607
512 46607
514 46607
515 46607
538 46607
539 46607
543 46607
546 46607
552 46607
570 46607

49 CFR

538 46740
571 47086
583 46385
Proposed Rules:
531 46756

50 CFR

32 46390
660 47089
679 ....46399, 46570, 47089
Proposed Rules:
17 ....46430, 46608, 47105
21 46431
648 47106
679 47108

REMINDERS

The items in this list were editorially compiled as an aid to Federal Register users. Inclusion or exclusion from this list has no legal significance.

RULES GOING INTO EFFECT TODAY

AGRICULTURE DEPARTMENT

Agricultural Marketing Service

Prunes (fresh) grown in Washington and Oregon; published 8-7-96

AGRICULTURE DEPARTMENT

Animal and Plant Health Inspection Service

Exportation and importation of animals and animal products:

African swine fever; disease status change--

Spain; published 8-22-96

AGRICULTURE DEPARTMENT

Highly erodible land and wetland conservation; published 9-6-96

COMMERCE DEPARTMENT

National Oceanic and Atmospheric Administration

Fishery conservation and management:

Pacific Coast groundfish; published 8-28-96

ENVIRONMENTAL PROTECTION AGENCY

Acquisition regulations:

Conduct of surveys, major systems acquisitions, etc.; published 9-6-96

Air quality implementation plans; approval and promulgation; various States:

Tennessee; withdrawn; published 9-6-96

Washington; withdrawn; published 9-6-96

Superfund program:

National oil and hazardous substances contingency plan--

National priorities list update; published 9-6-96

HOUSING AND URBAN DEVELOPMENT DEPARTMENT

Federal regulatory reform:

Fair housing; State and local enforcement agencies certification and funding; published 8-7-96

INTERIOR DEPARTMENT

Fish and Wildlife Service

Endangered and threatened species:

Wahane (Hawaiian plant); published 8-7-96

JUSTICE DEPARTMENT

Immigration and Naturalization Service

Immigration:

Aliens--

Lawfully present in United States; term definition; published 9-6-96

NATIONAL AERONAUTICS AND SPACE ADMINISTRATION

Acquisition regulations:

FAR supplement rewrite; Federal regulatory reform; published 9-6-96

Government property reporting by contractors; published 9-6-96

TRANSPORTATION DEPARTMENT

Coast Guard

Anchorage regulations:

South Carolina; published 8-7-96

TRANSPORTATION DEPARTMENT

Federal Aviation Administration

Airworthiness directives:

Textron Lycoming; correction; published 9-6-96

COMMENTS DUE NEXT WEEK

AGRICULTURE DEPARTMENT

Agricultural Marketing Service

Cranberries grown in Massachusetts et al.; comments due by 9-11-96; published 8-12-96

Milk marketing orders:

Eastern Colorado; comments due by 9-13-96; published 9-6-96

Iowa; comments due by 9-11-96; published 9-4-96

Peanuts, domestically produced; comments due by 9-12-96; published 8-28-96

AGRICULTURE DEPARTMENT

Animal and Plant Health Inspection Service

Exportation and importation of animals and animal products:

Rinderpest and foot-and-mouth disease; disease status change--

Czech Republic and Italy; comments due by 9-9-96; published 7-9-96

AGRICULTURE DEPARTMENT

Food Safety and Inspection Service

Meat and poultry inspection:

Shingle packed bacon; net weight statements; labeling requirement removed; comments due by 9-13-96; published 8-14-96

COMMERCE DEPARTMENT

Census Bureau

Foreign trade statistics:

Customs entry records; collection of Canadian Province of Origin information; comments due by 9-9-96; published 7-10-96

COMMERCE DEPARTMENT

National Oceanic and Atmospheric Administration

Fishery conservation and management:

Alaska; fisheries of Exclusive Economic Zone and repeal of North Pacific fisheries research plan; comments due by 9-9-96; published 7-12-96

North Pacific fisheries research plan; implementation; comments due by 9-13-96; published 8-2-96

Northeastern United States fisheries; comments due by 9-12-96; published 7-24-96

Ocean salmon off coasts of Washington, Oregon, and California; comments due by 9-9-96; published 8-23-96

Pacific Coast groundfish; comments due by 9-12-96; published 8-28-96

DEFENSE DEPARTMENT

Acquisition regulations:

Allowable individual compensation; comments due by 9-9-96; published 7-10-96

ENERGY DEPARTMENT

Energy Efficiency and Renewable Energy Office

Consumer products; energy conservation program:

Appliance standards; revised product data sheets; comments due by 9-9-96; published 8-27-96

Refrigerators, refrigerator-freezers, and freezers; comments due by 9-11-96; published 8-12-96

ENVIRONMENTAL PROTECTION AGENCY

Air pollution control; new motor vehicles and engines:

Highway heavy-duty engines; emissions control; comments due by 9-12-96; published 7-19-96

Air programs; fuels and fuel additives:

Reformulated gasoline standards--

Nitrogen oxides; comments due by 9-9-96; published 7-9-96

Air quality implementation plans:

Preparation, adoption, and submittal--

Air quality models guideline; comments due by 9-11-96; published 8-12-96

Transportation conformity rule; flexibility and streamlining; comments due by 9-9-96; published 7-9-96

Air quality implementation plans; approval and promulgation; various States:

Illinois; comments due by 9-9-96; published 8-8-96

Massachusetts; comments due by 9-9-96; published 8-8-96

Pennsylvania; comments due by 9-9-96; published 7-10-96

Washington; comments due by 9-9-96; published 8-8-96

Air quality implementation plans; approval and promulgation; various States; air quality planning purposes; designation of areas:

Colorado; comments due by 9-9-96; published 8-23-96

Illinois; comments due by 9-9-96; published 8-8-96

Air quality planning purposes; designation of areas:

Nevada; comments due by 9-11-96; published 8-12-96

Clean Air Act:

State operating permits programs--

New Hampshire; comments due by 9-13-96; published 8-14-96

Hazardous waste program authorizations:

Delaware; comments due by 9-9-96; published 8-8-96

Hazardous waste:

Hazardous waste program authorizations--

Indian Tribes; grant funds for development and implementation, eligibility; comments due by 9-12-96; published 9-5-96

State underground storage tank program approvals--

Connecticut; comments due by 9-9-96; published 8-9-96

Delaware; comments due by 9-9-96; published 8-5-96

Pesticide programs:

Risk/benefit information; reporting requirements; comments due by 9-11-96; published 8-12-96

FARM CREDIT ADMINISTRATION

Farm credit system:

Capital adequacy and customer eligibility; miscellaneous amendments; comments due by 9-12-96; published 8-13-96

FEDERAL COMMUNICATIONS COMMISSION

Radio stations; table of assignments:

Michigan; comments due by 9-9-96; published 8-14-96

Pennsylvania; comments due by 9-9-96; published 8-20-96

FEDERAL HOUSING FINANCE BOARD

Federal home loan bank system:

Budgets approval; comments due by 9-9-96; published 8-9-96

FEDERAL TRADE COMMISSION

Textile Fiber Products Identification Act:

Teijin Ltd.; generic fiber name application; comments due by 9-9-96; published 7-9-96

HEALTH AND HUMAN SERVICES DEPARTMENT

Food and Drug Administration

Federal regulatory review:

Food additives; comments due by 9-10-96; published 6-12-96

Food standards; comments due by 9-10-96; published 6-12-96

Human drugs:

Internal analgesic, antipyretic, and antirheumatic products (OTC); tentative final monograph; comments due by 9-11-96; published 6-13-96

HOUSING AND URBAN DEVELOPMENT DEPARTMENT

Public and Indian housing:

Public housing families; strengthening role of fathers; regulatory development; comments due by 9-13-96; published 7-30-96

HOUSING AND URBAN DEVELOPMENT DEPARTMENT

Federal Housing Enterprise Oversight Office

Risk-based capital; comments due by 9-9-96; published 6-11-96

INTERIOR DEPARTMENT

Indian Affairs Bureau

Housing improvement program:

Administrative guidelines simplification; comments due by 9-13-96; published 7-15-96

Land and water:

Land acquisitions--

Navajo partitioned land grazing regulations; comments due by 9-9-96; published 6-10-96

Practice and procedure:

Employment preference; comments due by 9-10-96; published 7-12-96

INTERIOR DEPARTMENT

Land Management Bureau

Range management:

Wild free-roaming horses and burros; adoption fees; comments due by 9-9-96; published 7-10-96

JUSTICE DEPARTMENT

Immigration and Naturalization Service

Immigration:

Resettlement assistance eligibility; paroled Cuban or Haitian nationals; comments due by 9-10-96; published 7-12-96

Spouses and unmarried children of refugees/asylees; procedures for filing derivative petitions; comments due by 9-9-96; published 7-9-96

JUSTICE DEPARTMENT

Classified national security information and access to classified information; comments due by 9-10-96; published 7-12-96

LEGAL SERVICES CORPORATION

Class actions; funding restriction; comments due by 9-12-96; published 8-13-96

Eviction proceedings of persons engaged in illegal drug activity; representation funding restriction; comments due by 9-12-96; published 8-13-96

Redistricting; funding restriction; comments due by 9-12-96; published 8-13-96

Use of funds from sources other than Corporation (non-LSC funds); comments due by 9-12-96; published 8-13-96

NATIONAL CREDIT UNION ADMINISTRATION

Credit unions:

Share insurance payment and appeals; comments due by 9-10-96; published 7-12-96

NUCLEAR REGULATORY COMMISSION

Rulemaking petitions:

IsoStent, Inc.; comments due by 9-10-96; published 6-27-96

PERSONNEL MANAGEMENT OFFICE

Allowances and diffferentials:

Cost-of-living allowances in Alaska, Hawaii, Puerto Rico, Guam, and U.S. Virgin Islands; partnership pilot project; comments due by 9-11-96; published 8-12-96

Health benefits, Federal employees:

Opportunities to enroll and change enrollment; comments due by 9-9-96; published 7-9-96

POSTAL SERVICE

Postal electronic commerce services; development; comments due by 9-13-96; published 8-14-96

SECURITIES AND EXCHANGE COMMISSION

Securities:

Beneficial ownership reporting requirements; comments due by 9-9-96; published 7-11-96

TRANSPORTATION DEPARTMENT

Coast Guard

Load lines:

Great Lakes certificate extension; comments due by 9-9-96; published 7-9-96

TRANSPORTATION DEPARTMENT

Computer reservation systems:

Prohibition of participating systems from engaging in level of participation that would be lower than level of participation in any other system; comments due by 9-13-96; published 8-14-96

TRANSPORTATION DEPARTMENT

Federal Aviation Administration

Airworthiness directives:

Airbus; comments due by 9-10-96; published 7-30-96

AlliedSignal Inc.; comments due by 9-9-96; published 7-10-96

Boeing; comments due by 9-9-96; published 7-9-96

Fokker; comments due by 9-9-96; published 7-9-96

McDonnell Douglas; comments due by 9-9-96; published 7-9-96

Pratt & Whitney; comments due by 9-10-96; published 7-12-96

Short Brothers PLC; comments due by 9-9-96; published 7-29-96

Short Brothers plc; comments due by 9-11-96; published 8-1-96

Airworthiness standards:

Special conditions--

Cessna model 550 airplane (serial number 550-0801, etc.); comments due by 9-13-96; published 8-14-96

Class D airspace; comments due by 9-9-96; published 7-29-96

Class E airspace; comments due by 9-13-96; published 7-29-96

TRANSPORTATION DEPARTMENT

Federal Highway Administration

Motor carrier safety and hazardous materials administration:

Proceeding, investigations, and disqualifications and penalties; practice rules; comments due by 9-13-96; published 8-6-96

Motor vehicle safety standards:

Parts and accessories necessary for safe operation--

Antilock brake systems on air-braked truck tractors, single-unit trucks, buses, trailers, and converter dollies; comments due by 9-10-96; published 7-12-96

TRANSPORTATION DEPARTMENT

National Highway Traffic Safety Administration

Motor vehicle safety standards:

Occupant crash protection--

Safety belt fit improvement; Type 2 safety belts for adjustable seats in automobiles with gross weight of 10,000 pounds or less; comments due by 9-12-96; published 7-29-96

TREASURY DEPARTMENT
Alcohol, Tobacco and Firearms Bureau

Alcohol, tobacco, and other excise taxes:

Liquors and articles from Puerto Rico and Virgin Islands; Federal regulatory review; comments due by 9-11-96; published 6-13-96

Alcoholic beverages:

Distilled spirits; labeling and advertising--

Grape brandy, unaged; comments due by 9-11-96; published 6-13-96

TREASURY DEPARTMENT
Internal Revenue Service

Estate and gift taxes:

Generation-skipping transfer tax; comments due by 9-10-96; published 6-12-96

Sale of seized property; setting of minimum price; comments due by 9-11-96; published 6-13-96

VETERANS AFFAIRS DEPARTMENT

Adjudication; pensions, compensation, dependency, etc.:

Diseases associated with exposure to herbicide agents--

Prostate cancer and acute and subacute peripheral neuropathy; comments due by 9-9-96; published 8-8-96