6–7–96
Vol. 61 No. 111
Pages 29001–29266

federal register

Friday
June 7, 1996

Briefings on How To Use the Federal Register
For information on briefings in Chicago, IL, and Washington, DC, see announcement on the inside cover of this issue.

FEDERAL REGISTER Published daily, Monday through Friday, (not published on Saturdays, Sundays, or on official holidays), by the Office of the Federal Register, National Archives and Records Administration, Washington, DC 20408, under the Federal Register Act (49 Stat. 500, as amended; 44 U.S.C. Ch. 15) and the regulations of the Administrative Committee of the Federal Register (1 CFR Ch. I). Distribution is made only by the Superintendent of Documents, U.S. Government Printing Office, Washington, DC 20402.

The Federal Register provides a uniform system for making available to the public regulations and legal notices issued by Federal agencies. These include Presidential proclamations and Executive Orders and Federal agency documents having general applicability and legal effect, documents required to be published by act of Congress and other Federal agency documents of public interest. Documents are on file for public inspection in the Office of the Federal Register the day before they are published, unless earlier filing is requested by the issuing agency.

The seal of the National Archives and Records Administration authenticates this issue of the Federal Register as the official serial publication established under the Federal Register Act. 44 U.S.C. 1507 provides that the contents of the Federal Register shall be judicially noticed.

The Federal Register is published in paper, 24x microfiche and as an online database through *GPO Access*, a service of the U.S. Government Printing Office. The online database is updated by 6 a.m. each day the Federal Register is published. The database includes both text and graphics from Volume 59, Number 1 (January 2, 1994) forward. Free public access is available on a Wide Area Information Server (WAIS) through the Internet and via asynchronous dial-in. Internet users can access the database by using the World Wide Web; the Superintendent of Documents home page address is http://www.access.gpo.gov/su__docs/, by using local WAIS client software, or by telnet to swais.access.gpo.gov, then login as guest, (no password required). Dial-in users should use communications software and modem to call (202) 512–1661; type swais, then login as guest (no password required). For general information about *GPO Access*, contact the *GPO Access* User Support Team by sending Internet e-mail to gpoaccess@gpo.gov; by faxing to (202) 512–1262; or by calling (202) 512–1530 between 7 a.m. and 5 p.m. Eastern time, Monday–Friday, except for Federal holidays.

The annual subscription price for the Federal Register paper edition is $494, or $544 for a combined Federal Register, Federal Register Index and List of CFR Sections Affected (LSA) subscription; the microfiche edition of the Federal Register including the Federal Register Index and LSA is $433. Six month subscriptions are available for one-half the annual rate. The charge for individual copies in paper form is $8.00 for each issue, or $8.00 for each group of pages as actually bound; or $1.50 for each issue in microfiche form. All prices include regular domestic postage and handling. International customers please add 25% for foreign handling. Remit check or money order, made payable to the Superintendent of Documents, or charge to your GPO Deposit Account, VISA or MasterCard. Mail to: New Orders, Superintendent of Documents, P.O. Box 371954, Pittsburgh, PA 15250–7954.

There are no restrictions on the republication of material appearing in the Federal Register.

How To Cite This Publication: Use the volume number and the page number. Example: 61 FR 12345.

SUBSCRIPTIONS AND COPIES

PUBLIC	
Subscriptions:	
Paper or fiche	202–512–1800
Assistance with public subscriptions	512–1806
General online information	202–512–1530
Single copies/back copies:	
Paper or fiche	512–1800
Assistance with public single copies	512–1803
FEDERAL AGENCIES	
Subscriptions:	
Paper or fiche	523–5243
Assistance with Federal agency subscriptions	523–5243

For other telephone numbers, see the Reader Aids section at the end of this issue.

FEDERAL REGISTER WORKSHOP

THE FEDERAL REGISTER: WHAT IT IS AND HOW TO USE IT

FOR: Any person who uses the Federal Register and Code of Federal Regulations.

WHO: Sponsored by the Office of the Federal Register.

WHAT: Free public briefings (approximately 3 hours) to present:

1. The regulatory process, with a focus on the Federal Register system and the public's role in the development of regulations.
2. The relationship between the Federal Register and Code of Federal Regulations.
3. The important elements of typical Federal Register documents.
4. An introduction to the finding aids of the FR/CFR system.

WHY: To provide the public with access to information necessary to research Federal agency regulations which directly affect them. There will be no discussion of specific agency regulations.

CHICAGO, IL

[Two Sessions]

WHEN: June 11, 1996:
9:00 am–12:00 pm
1:30 pm–4:30 pm

WHERE: Metcalfe Federal Building, Conference Room 328, 77 West Jackson, Chicago, Illinois 60604

RESERVATIONS: 1–800–688–9889

WASHINGTON, DC

[Two Sessions]

WHEN: June 18, 1996 at 9:00 am, and June 25, 1996 at 9:00 am

WHERE: Office of the Federal Register Conference Room, 800 North Capitol Street, NW., Washington, DC (3 blocks north of Union Station Metro)

RESERVATIONS: 202–523–4538

Printed on recycled paper containing 100% post consumer waste

Contents

Federal Register
Vol. 61, No. 111
Friday, June 7, 1996

Agriculture Department
See Foreign Agricultural Service
See Forest Service
See Natural Resources Conservation Service
See Rural Utilities Service

Arctic Research Commission
NOTICES
Meetings, 29072

Army Department
See Engineers Corps

Blind or Severely Disabled, Committee for Purchase From People Who Are
See Committee for Purchase From People Who Are Blind or Severely Disabled

Centers for Disease Control and Prevention
NOTICES
Meetings:
Disease, Disability, and Injury Prevention and Control special emphasis panel, 29104

Coast Guard
RULES
Ports and waterways safety:
Lake Erie, MI and OH; safety zone, 29020–29021
Miami Beach, FL; security zone, 29022–29023
Ohio River, WV; safety zone, 29021–29022
Regattas and marine parades:
Harborwalk Boat Race, 29019–29020

Commerce Department
See International Trade Administration
See Minority Business Development Agency

Commission of Fine Arts
NOTICES
Meetings, 29137

Committee for Purchase From People Who Are Blind or Severely Disabled
NOTICES
Procurement list; additions and deletions, 29080–29081

Customs Service
NOTICES
Agency information collection activities:
Proposed collection; comment request, 29166–29167

Defense Department
See Engineers Corps
See Navy Department
RULES
Vocational rehabilitation and education:
Veterans education—
Post-Vietnam era veterans educational assistance; miscellaneous amendments, 29028–29030

Drug Enforcement Administration
NOTICES
Applications, hearings, determinations, etc.:
Stepan Co., 29133

Employment Standards Administration
NOTICES
Minimum wages for Federal and federally-assisted construction; general wage determination decisions, 29135–29137

Energy Department
See Energy Information Administration
See Federal Energy Regulatory Commission

Energy Information Administration
NOTICES
Agency information collection activities:
Submission for OMB review; comment request, 29083

Engineers Corps
NOTICES
Environmental statements; availability, etc.:
Chesapeake and Delaware Canal-Baltimore Harbor connecting channels (deepening), DE and MD; feasibility study
Meeting, 29081–29082
Salt River, Tempe and Phoenix, AZ; Rio Salado environmental restoration project, 29082–29083

Environmental Protection Agency
NOTICES
Agency information collection activities:
Proposed collection; comment request, 29092–29093
Committees; establishment, renewal, termination, etc.:
Environmental Policy and Technology National Advisory Council, 29094
Environmental statements; availability, etc.:
Agency statements—
Comment availability, 29094
Weekly receipts, 29094–29095
Meetings:
Acute Exposure Guideline Levels for Hazardous Substances National Advisory Committee, 29095
Environmental Policy and Technology National Advisory Council, 29095–29096
Pesticide programs:
Worker protection standards—
Chlorothalonil; exception, 29096–29099
Research and Development Office; strategic plan, 29099–29100

Executive Office of the President
See Presidential Documents

Federal Aviation Administration
RULES
Airworthiness directives:
McDonnell Douglas, 29007–29015
Textron Lycoming, 29003–29006
Standard instrument approach procedures, 29015–29018

PROPOSED RULES
Airworthiness directives:
Boeing, 29038–29039
NOTICES
Meetings:
RTCA, Inc., 29163–29164

Federal Communications Commission
NOTICES
Applications, hearings, determinations, etc.:
Bechtel, Gene A., et al., 29100

Federal Deposit Insurance Corporation
NOTICES
Meetings; Sunshine Act, 29100

Federal Energy Regulatory Commission
NOTICES
Electric rate and corporate regulation filings:
InterCoast Power Marketing Co. et al., 29085–29086
Hydroelectric applications, 29086–29089
Natural gas certificate filings:
NorAm Gas Transmission Co. et al., 29089–29092
Applications, hearings, determinations, etc.:
CNG Transmission Corp., 29083–29084
Northern Natural Gas Co., 29084
Northwest Pipeline Corp., 29084
Texas Eastern Transmission Corp., 29084–29085
Trunkline Gas Co., 29085

Federal Highway Administration
PROPOSED RULES
Engineering and traffic operations:
Uniform Traffic Control Devices Manual—
Pedestrian, bicycle, and school warning signs, 29234–29235
NOTICES
Environmental statements; notice of intent:
Wake County, NC, 29164

Federal Maritime Commission
NOTICES
Senior Executive Service:
Performance Review Board; membership, 29100–29101

Federal Railroad Administration
NOTICES
Federal regulatory review:
Railroad Safety Advisory Committee; task acceptance, 29164–29165

Federal Reserve System
NOTICES
Banks and bank holding companies:
Formations, acquisitions, and mergers, 29101
Permissible nonbanking activities, 29101–29102
Meetings; Sunshine Act, 29102

Federal Trade Commission
PROPOSED RULES
Trade regulation rules:
Food retailing and gasoline industries; games of chance, 29039–29040

Fine Arts Commission
See Commission of Fine Arts

Fish and Wildlife Service
PROPOSED RULES
Endangered and threatened species:
Least chub, 29047–29048
NOTICES
Environmental statements; availability, etc.:
Waccamaw National Wildlife Refuge, SC, 29127

Food and Drug Administration
NOTICES
Meetings:
Advisory committees, panels, etc., 29104
Memorandums of understanding:
Russian Federation; imported and domestic food; information exchange and technical cooperation and training activities for specialists, 29104–29106

Foreign Agricultural Service
NOTICES
United States agricultural expertise; sharing with emerging markets, 29049

Forest Service
NOTICES
Meetings:
Intergovernmental Advisory Committee, 29050

General Accounting Office
NOTICES
Meetings:
Federal Accounting Standards Advisory Board, 29102

General Services Administration
NOTICES
Environmental statements; availability, etc.:
Blaine, WA; port of entry, 29102

Health and Human Services Department
See Centers for Disease Control and Prevention
See Food and Drug Administration
See National Institutes of Health
See Substance Abuse and Mental Health Services Administration
NOTICES
Agency information collection activities:
Submission for OMB review; comment request, 29102–29103
Scientific misconduct findings; administrative actions:
Fossel, Eric T., Ph.D., 29103–29104

Housing and Urban Development Department
RULES
Real Estate Settlement Procedures Act; implementation:
Computer loan origination systems; payments, 29255–29258
Controlled business arrangements; ''sham'' determination, 29258–29264
Employer-employee exemption, withdrawn; computer loan origination services, and controlled business disclosure format, 29238–29255
Office space rental, lock-outs and retaliation, 29264–29266
PROPOSED RULES
Lead-based paint hazards in federally owned residential property and housing receiving Federal assistance; notification, evaluation, and reduction, 29170–29232
NOTICES
Grant and cooperative agreement awards:
Fair housing initiatives program, 29108–29109

Public and Indian housing—
Rental Voucher and Certificate Programs (FY 1993 and 1994), 29109–29112
Grants and cooperative agreements; availability, etc.:
Facilities to assist homeless—
Excess and surplus Federal property, 29112–29127

Indian Affairs Bureau
PROPOSED RULES
Indian Gaming Regulatory Act; implementation:
Tribal revenue allocation plans, 29044–29047
Land and water:
Tribal electric power utilities, 29040–29044

Interior Department
See Fish and Wildlife Service
See Indian Affairs Bureau
See Land Management Bureau
See Minerals Management Service
See National Park Service

Internal Revenue Service
NOTICES
Agency information collection activities:
Proposed collection; comment request, 29167

International Trade Administration
NOTICES
Antidumping:
Brake drums and brake rotors—
China, 29073
Sulfanilic acid from—
China, 29073–29077
Antidumping duty orders and findings:
Intent to revoke, 29072–29073
Countervailing duties:
Laminated hardwood flooring from—
Canada, 29077–29078

Justice Department
See Drug Enforcement Administration
See National Institute of Justice

Labor Department
See Employment Standards Administration
NOTICES
Agency information collection activities:
Submission for OMB review; comment request, 29134–29135

Land Management Bureau
RULES
Range management:
Leases; grazing administration, 29030–29031
NOTICES
Agency information collection activities:
Submission for OMB review; comment request, 29127
Closure of public lands:
Arizona, 29127–29128
Environmental statements; availability, etc.:
Newmont Gold Co. bootstrap project, NV, 29128
Public land orders:
California, 29128
Florida; correction, 29129
Realty actions; sales, leases, etc.:
California, 29129
Resource management plans, etc.:
Big Dry Resource Area, MT, 29129–29130

Minerals Management Service
NOTICES
Agency information collection activities:
Proposed collection; comment request, 29130–29131

Minority Business Development Agency
NOTICES
Business development center program applications:
Massachusetts et al., 29078–29080

National Aeronautics and Space Administration
NOTICES
Patent licenses; non-exclusive, exclusive, or partially exclusive:
Marotta Scientific Controls, Inc., 29137

National Highway Traffic Safety Administration
RULES
Motor vehicle safety standards:
Federal regulatory review—
Vehicle identification number (VIN) physical requirements; consolidation, 29031–29036

National Institute of Justice
NOTICES
Executive Seminar Series on sentencing and corrections; proposals, 29133–29134

National Institutes of Health
NOTICES
Agency information collection activities:
Proposed collection; comment request, 29106
Submission for OMB review; comment request, 29103
Meetings:
National Center for Human Genome Research, 29106–29107
National Institute of Mental Health, 29107
National Institute on Deafness and Other Communication Disorders, 29107
Research Grants Division special emphasis panels, 29107–29108

National Park Service
NOTICES
Environmental statements; notice of intent:
Olympic National Park, WA, 29131–29132
National Register of Historic Places:
Pending nominations, 29132
Native American human remains and associated funerary objects:
Eiteljorg Museum of American Indians and Western Art, IN; Tlingit clan hat, 29132
Planning process guidelines; update, 29133

National Science Foundation
NOTICES
Meetings:
Antarctic tour operators, 29137–29138
Bioengineering and Environmental Systems Special Emphasis Panel, 29138
Civil and Mechanical Systems Special Emphasis Panel, 29138
Design, Manufacturing and Industrial Innovation Special Emphasis Panel, 29138–29139
Education and Human Resources Advisory Committee, 29139
Equal Opportunities in Science and Engineering Committee, 29139
Physics Special Emphasis Panel, 29139

Natural Resources Conservation Service
NOTICES
Hydric soils of United States; list availability, 29050–29070

Navy Department
NOTICES
Meetings:
Planning and Steering Advisory Committee, 29083

Nuclear Regulatory Commission
NOTICES
Applications, hearings, determinations, etc.:
Florida Power & Light Co., 29140–29142
Rochester Gas & Electric Corp., 29142–29144

Nuclear Waste Technical Review Board
NOTICES
Meetings, 29144

Presidential Documents
ADMINISTRATIVE ORDERS
Israel; U.S. agreement governing Arrow Deployability Program (Presidential Determination No. 96–27 of May 28, 1996), 29001

Public Health Service
See Centers for Disease Control and Prevention
See Food and Drug Administration
See National Institutes of Health
See Substance Abuse and Mental Health Services Administration

Railroad Retirement Board
NOTICES
Agency information collection activities:
Submission for OMB review; comment request, 29144–29145

Rural Utilities Service
NOTICES
Electric borrowers exempt from certain operational controls, 29070–29072

Securities and Exchange Commission
NOTICES
Self-regulatory organizations; proposed rule changes:
Chicago Board Options Exchange, Inc., 29154–29156
Chicago Stock Exchange, Inc., 29156–29158
Depository Trust Co., 29158–29160
Options Clearing Corp., 29160–29163
Applications, hearings, determinations, etc.:
AZX, Inc., 29145–29148
Bitwise Designs, Inc., 29148
Chase Manhattan Bank, N.A., et al., 29148–29150
GMO Trust et al., 29152–29154
INCSTAR Corp., 29154
Public utility holding company filings, 29150–29152

Substance Abuse and Mental Health Services Administration
NOTICES
Meetings; advisory committees:
June, 29108

Surface Transportation Board
RULES
Contracts and exemptions:
Railroad contracts; nonagricultural transportation contracts, 29036–29037
NOTICES
Railroad operation, acquisition, construction, etc.:
Head, Douglas M., et al., 29165
Norfolk & Western Railway Co., 29165
Railroad services abandonment:
Consolidated Rail Corp., 29165–29166
CSX Transportation, Inc., 29166

Transportation Department
See Coast Guard
See Federal Aviation Administration
See Federal Highway Administration
See Federal Railroad Administration
See National Highway Traffic Safety Administration
See Surface Transportation Board
RULES
Rulemaking proceedings; policy statement, 29018–29019
NOTICES
Aviation proceedings:
Agreements filed; weekly receipts, 29163
Certificates of public convenience and necessity and foreign air carrier permits; weekly applications, 29163
Hearings, etc.—
Sky Trek International Airlines, Inc. [Editorial Note: This document, published at 61 FR 28255 in the Federal Register of June 4, 1996, was incorrectly identified in that issue's Table of Contents.]

Treasury Department
See Customs Service
See Internal Revenue Service

United States Information Agency
NOTICES
Agency information collection activities:
Submission for OMB review; comment request, 29167–29168

Veterans Affairs Department
RULES
Adjudication; pensions, compensation, dependency, etc.:
Soldiers' and sailors' civil relief, 29025–29027
Veterans mortgage life insurance, 29027
Freedom of Information Act and Privacy Act:
Information law; technical amendments, 29023
Investigation regulations; technical amendments, 29023–29024
Life Insurance, United States Government:
Federal regulatory review, 29024–29025
Practice and procedure:
Board of Veteran's Appeals; elimination of unnecessary provisions, 29027–29028
Vocational rehabilitation and education:
Veterans education—
Post-Vietnam era veterans educational assistance; miscellaneous amendments, 29028–29030

Separate Parts In This Issue

Part II
Department of Housing and Urban Development, 29170–29232

Part III
Department of Transportation, Federal Highway Administration, 29234–29235

Part IV

Department of Housing and Urban Development, 29238–29266

Reader Aids

Additional information, including a list of public laws, telephone numbers, reminders, and finding aids, appears in the Reader Aids section at the end of this issue.

Electronic Bulletin Board

Free Electronic Bulletin Board service for Public Law numbers, Federal Register finding aids, and a list of documents on public inspection is available on 202–275–1538 or 275–0920.

CFR PARTS AFFECTED IN THIS ISSUE

A cumulative list of the parts affected this month can be found in the Reader Aids section at the end of this issue.

3 CFR

Presidential Determinations
96–27 of May 28, 1996 29001

14 CFR
39 (3 documents) 29003, 29007, 29009
97 (2 documents) 29015, 29016
399.....29018

Proposed Rules:
39.....29038

16 CFR

Proposed Rules:
419.....29039

23 CFR

Proposed Rules:
655.....29234

24 CFR
3500 (4 documents) 29238, 29255, 29258, 29264

Proposed Rules:
35.....29170
36.....29170
37.....29170

25 CFR

Proposed Rules:
175.....29040
290.....29044

33 CFR
100.....29019
165 (3 documents) 29020, 29021, 29022

38 CFR
1 (2 documents) 29023, 29024
6.....29024
7.....29025
8a.....29027
20.....29027
21.....29028

43 CFR
2120.....29030
4100.....29030
4600.....29030

49 CFR
541.....29031
565.....29031
567.....29031
571.....29031
1039.....29036

50 CFR

Proposed Rules:
17.....29047

Federal Register
Vol. 61, No. 111
Friday, June 7, 1996

Presidential Documents

Title 3—

The President

Presidential Determination No. 96–27 of May 28, 1996

U.S.-Israel Arrow Deployability Program

Memorandum for the Secretary of Defense

Pursuant to the authority vested in me by the National Defense Authorization Act for Fiscal Year 1994, Public Law 103–160, I hereby certify that:

—the United States and the Government of Israel have entered into an agreement governing the conduct and funding of the Arrow Deployability Program;

—the Arrow Deployability Program will benefit the United States and has not been barred by other Congressional direction;

—the Arrow missile successfully completed a flight test on June 12, 1994, in which it intercepted a target missile under realistic test conditions; and

—the Government of Israel is continuing, in accordance with its previous public commitments, to adhere to export controls pursuant to the Guidelines and Annex of the Missile Technology Control Regime.

You are authorized and directed to notify the Congress of this determination and to publish it in the Federal Register.

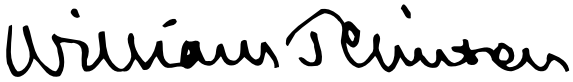

THE WHITE HOUSE,
Washington, May 28, 1996.

[FR Doc. 96–14583
Filed 6–6–96; 8:45 am]
Billing code 5000–04–M

Rules and Regulations

Federal Register
Vol. 61, No. 111
Friday, June 7, 1996

This section of the FEDERAL REGISTER contains regulatory documents having general applicability and legal effect, most of which are keyed to and codified in the Code of Federal Regulations, which is published under 50 titles pursuant to 44 U.S.C. 1510.

The Code of Federal Regulations is sold by the Superintendent of Documents. Prices of new books are listed in the first FEDERAL REGISTER issue of each week.

DEPARTMENT OF TRANSPORTATION

Federal Aviation Administration

14 CFR Part 39

[Docket No. 91–ANE–29; Amendment 39–9470; AD 91–21–01 R1]

RIN 2120–AA64

Airworthiness Directives; Textron Lycoming Model TIO–540–S1AD Reciprocating Engines

AGENCY: Federal Aviation Administration, DOT.

ACTION: Final rule; request for comments.

SUMMARY: This amendment revises an existing airworthiness directive (AD), applicable to Textron Lycoming Model TIO–540–S1AD reciprocating engines, that currently requires the upgrade of the engine exhaust system to a new design configuration; and also establishes inspection intervals for engines incorporating the new design configuration, for engines incorporating the design configuration required by a previous AD, and for engines not yet incorporating either design configuration. This amendment clarifies that an exhaust system disassembly is not necessary when inspecting the exhaust system after the installation of the new design One-piece Exhaust Riser Kit, and Manifold Retaining Kit. This amendment is prompted by reports from operators requesting clarification of two paragraphs in the compliance section. The actions specified by this AD are intended to prevent cracking or distortion of engine exhaust system flanges, V-band coupling, and pipes, which could result in engine compartment fire and smoke entering the cabin with possible loss to the aircraft.

DATES: Effective June 27, 1996.

The incorporation by reference of certain publications listed in the regulations was approved by the Director of the Federal Register as of November 4, 1991.

Comments for inclusion in the Rules Docket must be received on or before August 6, 1996.

ADDRESSES: Submit comments in triplicate to the Federal Aviation Administration (FAA), New England Region, Office of the Assistant Chief Counsel, Attention: Rules Docket No. 91–ANE–29, 12 New England Executive Park, Burlington, MA 01803–5299. Comments may also be submitted to the Rules Docket by using the following Internet address: ''epd-adcomments@mail.hq.faa.gov''.

The service information referenced in this AD may be obtained from Textron Lycoming/Subsidiary of Textron Inc., Williamsport, PA 17701; (717) 327–7278, fax (717) 327–7022. This information may be examined at the FAA, New England Region, Office of the Assistant Chief Counsel, 12 New England Executive Park, Burlington, MA; or at the Office of the Federal Register, 800 North Capitol Street, NW., suite 700, Washington, DC.

FOR FURTHER INFORMATION CONTACT: Richard Fiesel, Aerospace Engineer, New York Aircraft Certification Office, FAA, Engine and Propeller Directorate, 10 Fifth St., 3rd Floor, Valley Stream, MY 11581–1200; telephone (516) 256–7504, fax (516) 568–2716.

SUPPLEMENTARY INFORMATION: On September 18, 1991, the Federal Aviation Administration (FAA) issued airworthiness directive (AD) 91–21–01, Amendment 39–8048 (56 FR 51646, October 15, 1991), to require the modification of all affected Textron Lycoming Model TIO–540–S1AD reciprocating engines by upgrading the engine exhaust system; and repetitive inspections of the exhaust system for engines incorporating the new design configuration, for engines incorporating the design configuration required by the existing AD, and for engines not yet incorporating either design configuration. That action was prompted by reports of failures of exhaust systems due to exhaust pipes that were misaligned and misassembled, or both. That condition, if not corrected, could result in cracking or distortion of engine exhaust system flanges, V-band coupling, and pipes, which could result in engine compartment fire and smoke entering the cabin with possible loss to the aircraft.

Since the issuance of that AD, the FAA has received reports from operators requesting clarification of two paragraphs in the compliance section. Operators have incorrectly interpreted these compliance paragraphs, (b)(2)(i) and (b)(2)(ii), as requiring disassembly of the exhaust system after installation of the new design One-piece exhaust Riser and Manifold Retaining Kits. This revised AD adds paragraph.(b)(2)(iii) to clarify that disassembly and re-inspection are not required after compliance with paragraph (b)(2)(i) of this AD.

The FAA has reviewed and approved the technical contents of Textron Lycoming Service Bulletin (SB) No. 484, dated January 30, 1989, that describes the inspection, alignment, and modification of the original exhaust assembly, and Textron Lycoming No. SB 499A, dated June 14, 1991, that describes the installation of the redesigned one-piece exhaust pipe configuration.

Since an unsafe condition has been identified that is likely to exist or develop on other engines of this same type design, this AD revises AD 91–21–01 to clarify that an exhaust system disassembly is not necessary when inspecting the exhaust system after the installation of the new design One-piece Exhaust Riser Kit, and Manifold Retaining Kit. The actions are required to be accomplished in accordance with the SB's described previously.

Since a situation exists that requires the immediate adoption of this regulation, it is found that notice and opportunity for prior public comment hereon are impracticable, and that good cause exists for making this amendment effective in less than 30 days.

Comments Invited

Although this action is in the form of a final rule that involves requirements affecting flight safety and, thus, was not preceded by notice and an opportunity for public comment, comments are invited on this rule. Interested persons are invited to comment on this rule by submitting such written data, views, or arguments as they may desire. Communications should identify the Rules Docket number and be submitted in triplicate to the address specified under the caption **ADDRESSES.** All communications received on or before

the closing date for comments will be considered, and this rule may be amended in light of the comments received. Factual information that supports the commenter's ideas and suggestions is extremely helpful in evaluating the effectiveness of the AD action and determining whether additional rulemaking action would be needed.

Comments are specifically invited on the overall regulatory, economic, environmental, and energy aspects of the rule that might suggest a need to modify the rule. All comments submitted will be available, both before and after the closing date for comments, in the Rules Docket for examination by interested persons. A report that summarizes each FAA-public contact concerned with the substance of this AD will be filed in the Rules Docket.

Commenters wishing the FAA to acknowledge receipt of their comments submitted in response to this notice must submit a self-addressed, stamped postcard on which the following statement is made: ''Comments to Docket Number 91–ANE–29.'' The postcard will be date stamped and returned to the commenter.

The regulations adopted herein will not have substantial direct effects on the States, on the relationship between the national government and the States, or on the distribution of power and responsibilities among the various levels of government. Therefore, in accordance with Executive Order 12612, it is determined that this final rule does not have sufficient federalism implications to warrant the preparation of a Federalism Assessment.

The FAA has determined that this regulation is an emergency regulation that must be issued immediately to correct an unsafe condition in aircraft, and is not a ''significant regulatory action'' under Executive Order 12866. It has been determined further that this action involves an emergency regulation under DOT Regulatory Policies and Procedures (44 FR 11034, February 26, 1979). If it is determined that this emergency regulation otherwise would be significant under DOT Regulatory Policies and Procedures, a final regulatory evaluation will be prepared and placed in the Rules Docket. A copy of it, if filed, may be obtained from the Rules Docket at the location provided under the caption **ADDRESSES.**

List of Subjects in 14 CFR Part 39

Air transportation, Aircraft, Aviation safety, Incorporation by reference, Safety.

Adoption of the Amendment

Accordingly, pursuant to the authority delegated to me by the Administrator, the Federal Aviation Administration amends part 39 of the Federal Aviation Regulations (14 CFR part 39) as follows:

PART 39—AIRWORTHINESS DIRECTIVES

1. The authority citation for part 39 continues to read as follows:

Authority: 49 U.S.C. 106(g), 40101, 40113, 44701.

§ 39.13 [Amended]

2. Section 39.13 is amended by removing Amendment 39–8048 (56 FR 51646, October 15, 1991) and by adding a new airworthiness directive, Amendment 39–9470, to read as follows:

91–21–01 R1 Textron Lycoming: Amendment 39–9470. Docket 91–ANE–29. Revises AD 91–21–01, Amendment 39–8048.

Applicability: Textron Lycoming Model TIO–540–S1AD reciprocating engines installed on but not limited to Piper PA–32 series aircraft.

Note 1: This airworthiness directive (AD) applies to each engine identified in the preceding applicability provision, regardless of whether it has been modified, altered, or repaired in the area subject to the requirements of this AD. For engines that have been modified, altered, or repaired so that the performance of the requirements of this AD is affected, the owner/operator must use the authority provided in paragraph (c) to request approval from the Federal Aviation Administration (FAA). This approval may address either no action, if the current configuration eliminates the unsafe condition, or different actions necessary to address the unsafe condition described in this AD. Such a request should include an assessment of the effect of the changed configuration on the unsafe condition addressed by this AD. In no case does the presence of any modification, alteration, or repair remove any engine from the applicability of this AD.

Compliance: Required as indicated, unless accomplished previously.

To prevent cracking or distortion of engine exhaust system flanges, V-band coupling, and pipes, which could result in engine compartment fire and smoke entering the cabin with possible loss to the aircraft, accomplish the following:

(a) For engines which have not complied with AD 89–12–04, paragraph (d), or Textron Lycoming Service Bulletin (SB) No. 484, Part II, dated January 30, 1989, on the effective date of this AD, accomplish the following:

(1) Within 25 hours time in service (TIS) after the effective date of this AD, install Crossover Exhaust Pipe Kit (05K21125) in accordance with Textron Lycoming SB No. 484, Part II, dated January 30, 1989, and also install new design One-piece Exhaust Riser Kit (05K21503) and Manifold Retainer Kit (05K19650–S) in accordance with Textron Lycoming SB No. 499A, dated June 14, 1991.

Note 2: Instructions and notes relating to marking the slip joints, rotating the exhaust pipes for alignment, and maintaining clearances at critical locations during the above installation are contained in Textron Lycoming SB No. 499A, dated June 14, 1991.

(2) Thereafter, at intervals not to exceed 100 hours TIS, accomplish the following:

(i) Inspect the exhaust system for heat damage, distortion, cracks or excessive wear in accordance with Textron Lycoming SB No. 484, Part II, dated January 30, 1989.

(ii) Inspect the exhaust system for clearance dimensions, proper fastener torque and slip joint engagement in accordance with paragraphs 10, 11, and 12 of Textron Lycoming SB No. 499A, dated June 14, 1991.

(iii) Repair or replace damaged parts with serviceable parts prior to further flight.

(b) For engines that have complied with all portions of AD 89–12–04, or Textron Lycoming SB No. 484, dated January 30, 1989, on the effective date of this AD, accomplish the following:

(1) Within 25 hours TIS after the effective date of this AD, and thereafter, at intervals not to exceed 25 hours TIS until the new design One-piece Exhaust Riser Kit (05K21503) has been installed in accordance with paragraph (b)(2)(i) of this AD, accomplish the following;

(i) Inspect all exhaust system joints, flanges, couplings and brackets for heat damage, distortion, cracks or excessive wear, in accordance with Textron Lycoming SB No. 484, dated January 30, 1989.

(ii) Inspect the exhaust system for proper slip joint engagement by measuring distances between pipe end points in accordance with Appendix 1 of this AD.

(iii) If damage is observed in the exhaust system or measurements exceed allowable dimensions, repair or replace parts with serviceable parts, as necessary, prior to further flight.

(iv) Reassemble and align exhaust system in accordance with Textron Lycoming SB No. 484, dated January 30, 1989, and Appendix 1 of this AD.

(2) Within 75 hours TIS after the effective date of this AD, accomplish the following:

(i) Install new design One-piece Exhaust Riser Kit (05K21503) and manifold retainer kit (05K19650–S) in accordance with Textron Lycoming SB No. 499A, dated June 14, 1991.

(ii) Thereafter, at intervals not to exceed 100 TIS, perform exhaust system inspections specified in paragraph (a)(2)(i) and (a)(2)(ii) of this AD. Operators need determine the minimum engagement of only exhaust pipes LW–16102 and LW–16103 by referring to Appendix 1 of this AD.

(iii) The repetitive 25 hours TIS inspections required by paragraph (b)(1) of this AD are not required after installation of the new design One-piece Exhaust Riser Kit (05K21503) and the Manifold Retainer Kit (05K19650–S) in accordance with paragraph (b)(2)(i) of this AD.

(c) An alternative method of compliance or adjustment of the initial compliance time that provides an acceptable level of safety may be used if approved by the Manager,

New York Aircraft Certification Office. The request should be forwarded through an appropriate FAA Maintenance Inspector, who may add comments and then send it to the Manager, New York Aircraft Certification Office.

Note 3: Information concerning the existence of approved alternative methods of compliance with this AD, if any, may be obtained from.

(d) Special flight permits may be issued in accordance with sections 21.197 and 21.199 of the Federal Aviation Regulations (14 CFR 21.197 and 21.199) to operate the aircraft to a location where the inspection may be performed.

(e) The actions required by this AD shall be done in accordance with the following Textron Lycoming SB's:

Document No.	Pages	Date
No. 484 ..... Total pages: 4.	1–4	January 30, 1989.
No. 499 ..... Total pages: 4.	1–4	June 14, 1991.

This incorporation by reference was approved by the Director of the Federal Register in accordance with 5 U.S.C. 552(a) and 1 CFR part 51 as of November 4, 1991. Copies may be obtained from Textron Lycoming/Subsidiary of Textron Inc., Williamsport, PA 17701; telephone (717) 327–7278, fax (717) 327–7022. Copies may be inspected at the FAA, New England Region, Office of the Assistant Chief Counsel, 12 New England Executive Park, Burlington, MA; or at the Office of the Federal Register, 800 North Capitol Street, NW., suite 700, Washington, DC.

(f) This amendment becomes effective on June 27, 1996.

Issued in Burlington, Massachusetts, on May 29, 1996.

Jay J. Pardee,

Manager, Engine and Propeller Directorate, Aircraft Certification Service.

BILLING CODE 4910–13–U

APPENDIX 1

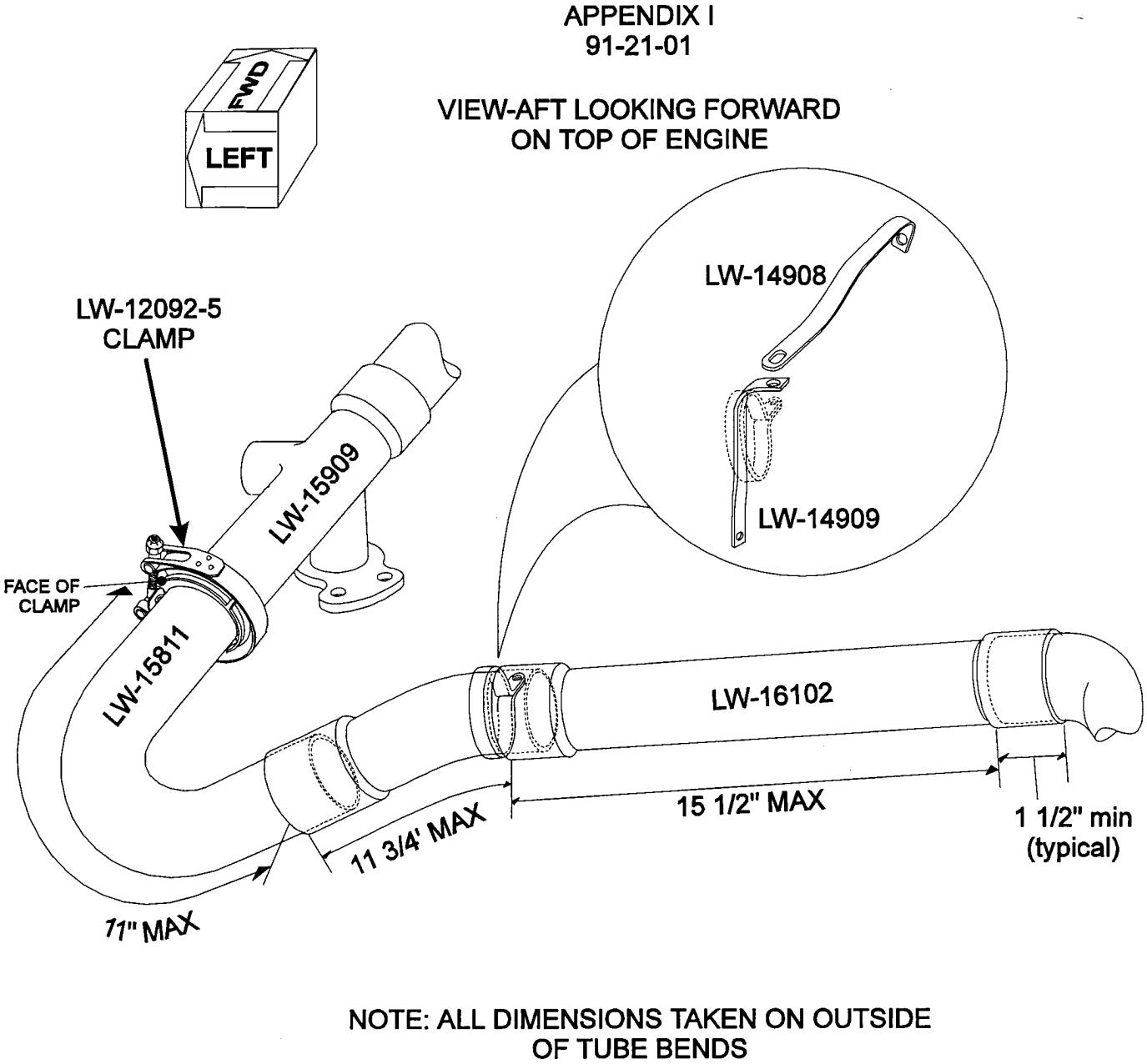

[FR Doc. 96–14220 Filed 6–6–96; 8:45 am]
BILLING CODE 4910–13–C

14 CFR Part 39

[Docket No. 96–NM–111–AD; Amendment 39–9664; AD 96–12–21]

RIN 2120–AA64

Airworthiness Directives; McDonnell Douglas Model DC–9–80 Series Airplanes, Model MD–88 Airplanes, and Model MD–90 Airplanes

AGENCY: Federal Aviation Administration, DOT.

ACTION: Final rule; request for comments.

SUMMARY: This amendment adopts a new airworthiness directive (AD) that is applicable to all McDonnell Douglas Model DC–9–80 series airplanes, Model MD–88 airplanes, and Model MD–90 airplanes. This action requires revising the Airplane Flight Manual to include limitations and procedures to address situations in which the autopilot or autothrottle fails to disengage. This amendment is prompted by incidents in which the flightcrew was unable to disconnect the autopilot or autothrottle function from the engaged position, due to a discrepancy in a microswitch that is associated with the operation of those functions. The actions specified in this AD are intended to ensure the flight crew's ability to control the airplane manually if the autopilot or autothrottle function fails to disengage.

DATES: Effective June 24, 1996.

Comments for inclusion in the Rules Docket must be received on or before August 6, 1996.

ADDRESSES: Submit comments in triplicate to the Federal Aviation Administration (FAA), Transport Airplane Directorate, ANM–103, Attention: Rules Docket No. 96–NM–111–AD, 1601 Lind Avenue, SW., Renton, Washington 98055–4056.

Information concerning this rulemaking action may be examined at the FAA, Transport Airplane Directorate, 1601 Lind Avenue, SW., Renton, Washington; or at the FAA, Los Angeles Aircraft Certification Office, Transport Airplane Directorate, 3960 Paramount Boulevard, Lakewood, California.

FOR FURTHER INFORMATION CONTACT: J. Kirk Baker, Aerospace Engineer, Systems and Equipment Branch, ANM–130L, FAA, Los Angeles Aircraft Certification Office, 3960 Paramount Boulevard, Lakewood, California 90712; telephone (310) 627–5345; fax (310) 627–5210.

SUPPLEMENTARY INFORMATION: The FAA has received several reports of incidents in which either the autopilot or the autothrottle function on McDonnell Douglas Model DC–9–80 series airplanes failed to disconnect from the engaged position. Two incidents occurred in which the flight crew was unable to disengage the autopilot function. As a result of one of these incidents, which occurred when the airplane was on final approach, the flight crew found it necessary to declare an emergency and to perform a go-around. At least two other incidents occurred in which the flight crew was unable to disengage the autothrottle function.

Investigation of these incidents revealed that the toggle/cam assembly of a microswitch, which is used for the autopilot and autothrottle functions on the Digital Flight Guidance Control Panel (DFGCP), can fail the functions in the engaged position. Further investigation revealed that the flight crew was able to disengage the autopilot or authrottle function by depressing and holding the release button for the functions (which are located on the control column and throttle levers). However, once the release button was released, the function re-engaged.

Failure of the autopilot or autothrottle function to disconnect from the engaged position can adversely affect the flight crew's ability to control the airplane manually.

Since the toggle/cam assembly of the subject microswitch that is installed on Model DC–9–80 series airplanes may also be installed on Model MD–88 and MD–90 airplanes, all of these airplane models may be subject to this same unsafe condition.

Explanation of the Requirements of the Rule

Since an unsafe condition has been identified that is likely to exist or develop on other Model DC–9–80 series, Model MD–88, and Model MD–90 airplanes of the same type design, this AD is being issued to ensure the flight crew's ability to continue to control the airplane manually if the autopilot or autothrottle function fails to disengage. This AD requires a revision to the FAA-approved Airplane Flight Manual (AFM) to include limitations and procedures to address situations in which the autopilot or autothrottle fails to disengage.

The FAA points out that failure of the autopilot or autothrottle function to disconnect from the engaged position can occur during any phase of flight. If it occurs during cruise, the flight crew can readily address the situation and continue to fly the airplane manually with the autopilot or autothrottle engaged. However, a safety concern arises if the failure occurs during approach, when the flight crews workload is particularly heavy and the airplane is close to the ground; the optimal environment for the flight crew during approach is one that is free from distraction. The limitation and associated abnormal procedures that are required by this AD to be included in the AFM will ensure that the flight crew is briefed on the appropriate procedures and, thereby, will be less distracted during that critical phase of flight.

The requirements of this AD are considered to be interim action until final action is identified, at which time the FAA may consider additional rulemaking.

Determination of Rule's Effective Date

Since a situation exists that requires the immediate adoption of this regulation, it is found that notice and opportunity for prior public comment hereon are impracticable, and that good cause exists for making this amendment effective in less than 30 days.

Comments Invited

Although this action is in the form of a final rule that involves requirements affecting flight safety and, thus, was not preceded by notice and an opportunity for public comment, comments are invited on this rule. Interested persons are invited to comment on this rule by submitting such written data, views, or arguments as they may desire. Communications shall identify the Rules Docket number and be submitted in triplicate to the address specified under the caption **ADDRESSES.** All communications received on or before the closing date for comments will be considered, and this rule may be amended in light of the comments received. Factual information that supports the commenter's ideas and suggestions is extremely helpful in evaluating the effectiveness of the AD action and determining whether additional rulemaking action would be needed.

Comments are specifically invited on the overall regulatory, economic, environmental, and energy aspects of the rule that might suggest a need to modify the rule. All comments submitted will be available, both before and after the closing date for comments, in the Rules Docket for examination by interested persons. A report that summarizes each FAA-public contact concerned with the substance of this AD will be filed in the Rules Docket.

Commenters wishing the FAA to acknowledge receipt of their comments submitted in response to this rule must submit a self-addressed, stamped

postcard on which the following statement is made: ''Comments to Docket Number 96–NM–111–AD.'' The postcard will be date stamped and returned to the commenter.

Regulatory Impact

The regulations adopted herein will not have substantial direct effects on the States, on the relationship between the national government and the States, or on the distribution of power and responsibilities among the various levels of government. Therefore, in accordance with Executive Order 12612, it is determined that this final rule does not have sufficient federalism implications to warrant the preparation of a Federalism Assessment.

The FAA has determined that this regulation is an emergency regulation that must be issued immediately to correct an unsafe condition in aircraft, and that it is not a ''significant regulatory action'' under Executive Order 12866. It has been determined further that this action involves an emergency regulation under DOT Regulatory Policies and Procedures (44 FR 11034, February 26, 1979). If it is determined that this emergency regulation otherwise would be significant under DOT Regulatory Policies and Procedures, a final regulatory evaluation will be prepared and placed in the Rules Docket. A copy of it, if filed, may be obtained from the Rules Docket at the location provided under the caption **ADDRESSES.**

List of Subjects in 14 CFR Part 39

Air transportation, Aircraft, Aviation safety, Safety.

Adoption of the Amendment

Accordingly, pursuant to the authority delegated to me by the Administrator, the Federal Aviation Administration amends part 39 of the Federal Aviation Regulations (14 CFR part 39) as follows:

PART 39—AIRWORTHINESS DIRECTIVES

1. The authority citation for part 39 continues to read as follows:

Authority: 49 U.S.C. 106(g), 40113, 44701.

§ 39.13 [Amended]

2. Section 39.13 is amended by adding the following new airworthiness directive:

96–12–21 McDonnell Douglas: Amendment 39–9664. Docket 96–NM–111–AD.

Applicability: Model DC–9–81 (MD–81), DC–9–82 (MD–82), DC–9–83 (MD–83), DC–9–87 (MD–87), MD–88, and MD–90 airplanes; certificated in any category.

Note 1: This AD applies to each airplane identified in the preceding applicability provision, regardless of whether it has been modified, altered, or repaired in the area subject to the requirements of this AD. For airplanes that have been modified, altered, or repaired so that the performance of the requirements of this AD is affected, the owner/operator must request approval for an alternative method of compliance in accordance with paragraph (c) of this AD. The request should include an assessment of the effect of the modification, alteration, or repair on the unsafe condition addressed by this AD; and, if the unsafe condition has not been eliminated, the request should include specific proposed actions to address it.

Compliance: Required as indicated, unless accomplished previously.

To ensure the flight crew's ability to continue to control the airplane manually if the autopilot or autothrottle function fails to disengage, accomplish the following:

(a) Within 14 days after the effective date of this AD, revise the Limitations section of the FAA-approved Airplane Flight Manual (AFM) to include the following statement. This may be accomplished by inserting a copy of this AD in the AFM.

''If the autopilot or autothrottle fails to disconnect normally, press and hold the autopilot release button or either autothrottle release button, as appropriate. Refer to the Abnormal Procedures section for procedures if the autopilot or autothrottle fails to disconnect.''

(b) Within 14 days after the effective date of this AD, revise the Abnormal Procedures section of the FAA-approved AFM to include the following information. This may be accomplished by inserting a copy of this AD in the AFM.

''AUTOPILOT:

If the Autopilot (A/P) disconnects when the AUTOPILOT RELEASE button on either control wheel is depressed, *and* re-engages when the AUTOPILOT RELEASE button is released, accomplish the following procedures:

PROCEDURE: Use Autopilot (as desired)

AUTOPILOT RELEASE button—PRESS AND HOLD

• Hold either yoke (yellow) Autopilot Release button while continuing to fly the aircraft manually. The A/P will remain disengaged while depressing the button.

• When the Autopilot Release button is released, the A/P will engage and all A/P functions should work normally.

TO SILENCE THE AURAL WARNING:

CAWS C/B (P–38)—PULL

• Circuit breaker is located behind the Captain's seat.

• Pulling the C/B will disable the Stall Warning SSRS–1, Landing Gear, Takeoff, Cabin Altitude, Speed Brake aural warnings, in addition to the Autopilot aural warning.

CAUTION:

Do not attempt to overpower the autopilot. When the autopilot is engaged, applying force to the column may allow the alternate trim to reposition the stabilizer. If the force is applied long enough, it will result in an out-of-trim condition.''

''AUTOTHROTTLE:

If the Autothrottle (A/T) disconnects when either throttle disconnect button is depressed, *and* re-engages when throttle disconnect button is released, accomplish the following procedures:

PROCEDURE: Use Autothrottle System (as desired)

WHEN A DISCONNECT IS NECESSARY:

AUTOTHROTTLE RELEASE BUTTON—PRESS AND HOLD

• Press and hold either button until flashing red A/T annunciation is illuminated. Flashing red light indicates autothrottle is disconnected.

• AUTOTHROTTLE RELEASE BUTTON may then be released.

• The FMA A/T window will annunciate as though the A/T is engaged.

• The flashing red A/T annunciation of the FMA cannot be extinguished with repeated depression of the autothrottle release button.

• If the throttle levers are retarded to the idle stop, the flashing red A/T annunciation will extinguish, and the A/T system will re-engage.

• If the DFGC is selected to the IAS mode and the A/T SPEED mode is selected, the A/T system will re-engage.''

(c) An alternative method of compliance or adjustment of the compliance time that provides an acceptable level of safety may be used if approved by the Manager, Los Angeles Aircraft Certification Office (ACO), FAA, Transport Airplane Directorate. Operators shall submit their requests through an appropriate FAA Principal Maintenance Inspector, who may add comments and then send it to the Manager, Los Angeles ACO.

Note 2: Information concerning the existence of approved alternative methods of compliance with this AD, if any, may be obtained from the Los Angeles ACO.

(d) Special flight permits may be issued in accordance with sections 21.197 and 21.199 of the Federal Aviation Regulations (14 CFR 21.197 and 21.199) to operate the airplane to a location where the requirements of this AD can be accomplished.

(e) This amendment becomes effective on June 24, 1996.

Issued in Renton, Washington, on June 3, 1996.

Darrell M. Pederson,

Acting Manager, Transport Airplane Directorate, Aircraft Certification Service.

[FR Doc. 96–14385 Filed 6–06–96; 8:45 am]

BILLING CODE 4910–13–P

14 CFR Part 39

[Docket No. 95–NM–120–AD; Amendment 39–9661; AD 96–12–18]

RIN 2120–AA64

Airworthiness Directives; McDonnell Douglas Model DC–10 Series Airplanes and Model MD–11F (Freighter) Airplanes

AGENCY: Federal Aviation Administration, DOT.

ACTION: Final rule.

SUMMARY: This amendment adopts a new airworthiness directive (AD) that is applicable to all McDonnell Douglas Model DC–10 series airplanes and Model MD–11F airplanes. Among other things, this amendment requires repetitive leak checks of the lavatory drain system and repair, if necessary; provides for the option of revising the FAA-approved maintenance program to include a schedule of leak checks; and requires the installation of a cap on the flush/fill line. This amendment is prompted by continuing reports of damage to engines and airframes, separation of engines from airplanes, and damage to property on the ground, caused by ''blue ice'' that forms from leaking lavatory drain systems on transport category airplanes and subsequently dislodges from the airplane fuselage. The actions specified by this AD are intended to prevent such damage associated with the problems of ''blue ice.''

EFFECTIVE DATE: July 12, 1996.

ADDRESSES: Information related to this rulemaking action may be examined at the FAA, Transport Airplane Directorate, 1601 Lind Avenue, SW., Renton, Washington; or at the FAA, Los Angeles Aircraft Certification Office, Transport Airplane Directorate, 3960 Paramount Boulevard, Lakewood, California.

FOR FURTHER INFORMATION CONTACT: Walter Eierman, Aerospace Engineer, Systems and Equipment Branch, ANM–130L, FAA, Los Angeles Aircraft Certification Office, 3960 Paramount Boulevard, Lakewood, California 90712; telephone (310) 627–5336; fax (310) 627–5210.

SUPPLEMENTARY INFORMATION: A proposal to amend part 39 of the Federal Aviation Regulations (14 CFR part 39) to include an airworthiness directive (AD) that is applicable to all Model DC–10 series airplanes and MD–11F airplanes was published in the Federal Register on November 2, 1995 (60 FR 55668). That action proposed to require repetitive leak checks of the lavatory drain system and repair, if necessary; to provide for the option of revising the FAA-approved maintenance program to include a schedule of leak checks; and to require the installation of a cap on the flush/fill line.

Interested persons have been afforded an opportunity to participate in the making of this amendment. Due consideration has been given to the comments received.

Support for the Proposal

One commenter supports the proposal.

Request To Exclude All-Cargo Configured Airplanes From Applicability

One commenter requests that the applicability of the proposal be revised to exclude airplanes operating in an all-cargo configuration, where lavatories and lavatory fill/drain systems have been removed.

The FAA concurs. This final rule requires leak checks of the lavatory/fill drain system. However, if no such system is installed on the airplane then, obviously, the requirements of the AD cannot be performed and, likewise, should not be required. Although the commenter states that, for all-cargo configurations of the affected airplanes, lavatory systems may be removed, the FAA is aware that most cases of all-cargo-configured Model DC–10's have at least one (forward) lavatory installed near the flightcrew deck. As long as there is one lavatory drainage system installed on the airplane, the requirements of this AD would still apply. To make this eminently clear to affected operators, the FAA has revised the applicability of the final rule to clarify that the AD applies to airplanes that are equipped with a lavatory drainage system.

Request To Revise Dump Valve Leak Check Procedure

One commenter requests that the dump valve leak check procedures, specified throughout the proposal, be revised to permit the check to be performed using less fluid. The proposal states that the check is to be performed by filling the toilet tank with fluid to a level such that the bowl is approximately half full (at least 2 inches above the flapper in the bowl). However, this commenter states that the check can be accomplished and the same intent can be achieved with the use of less fluid. This commenter, a U.S. operator, indicates that use of less fluid would be more effective in terms of both time and cost. As an example, the commenter states that many Model DC–10 airplanes are equipped with aft waste tanks with a 90-gallon capacity; if the proposed check procedures are accomplished, over 120 gallons of fluid would be required to fill the toilet tanks to a level such that each of the four toilet bowls are half full. The commenter requests that this leak check on these airplanes be revised to require a maximum of only 50 gallons of fluid to be used. The commenter asserts that this revision to the test procedures would still accomplish the same intent and would decrease the time required to test the system.

The FAA does not concur. The procedure to fill the toilet bowl to approximately ½ full is also meant to check the tank and the rinse line check valves. The FAA finds that performing the test using less fluid does not do as complete and adequate a job as is necessary to meet the intent of this AD.

Request To Delete the Method for Conducting Leak Checks

One commenter requests that the proposal be revised to delete the defined method of conducting the leak check. The commenter suggests that, in lieu of requiring the aircraft to be pressurized, the proposal should merely stipulate that operators are to ''apply 3 psi [sic] across the valve'' and then allow operators to determine the most economical means of verifying the integrity of the seals. The commenter contends that requiring pressurization of the airplane causes unnecessary expenses to be incurred.

The FAA does not consider that any revision to the final rule is necessary based on the commenter's request. The wording of the final rule (and proposal) simply states that the check must be performed with ''a minimum of 3 PSID applied across the valve.'' To do this does not require that the airplane be pressurized. The FAA acknowledges that the NOTE contained in the proposal referred operators to the procedures specified in chapter 38–30–00 of the DC–10 Maintenance Manual procedure as one source of guidance for performing the check procedures, and those particular procedures do call for pressurizing the airplane. However, the reference to the Maintenance Manual procedure is merely informational; it is not a requirement and, likewise, pressurizing the airplane is not a requirement. The only requirement of the AD is that a minimum of 3 PSID be applied across the valve when the check is performed.

Request for Clarification of Check Requirements for Valves With Outer Seals and Inner Caps

One commenter requests that proposed paragraphs (a)(3)(i) and (a)(3)(ii) be revised to define more clearly which types of valves require the outer seal to be pressure checked for leakage.

The FAA agrees that some clarification is warranted. Some valves have an inner seal that is closed when the outer cap is closed. For this type of valve, leakage from the outer cap could only be checked if the inner seal were removed since, when the inner seal is correctly in place, it will prevent any fluid from reaching the outer cap seal. For this type of valve, paragraph (a)(3)(ii) of the final rule provides an alternative to allow operators to inspect the seal and seal surface of the outer cap seal in lieu of performing a leak check of the outer seal. The FAA has included a new NOTE in paragraph (a)(3) to provide this information.

Request To Increase Leak Check Interval for Certain Shaw Aero Valves

One commenter requests that proposed paragraph (a)(1) and (b)(2)(i) be revised to allow the following Shaw Aero valves to be leak checked at 1,000-hour intervals:

- 331 series, all serial numbers;
- 332 series, all serial numbers;
- 10101000BA2, having serial numbers 130 and higher; and
- 10101000BB2, all serial numbers.

The commenter states that these valves have been accepted previously by the FAA for a 1,000-hour leak check interval either in accordance with AD 94–23–10, amendment 39–9073 (59 FR 59124, November 16, 1994), which is applicable to Boeing Model 727 series airplanes; or a similar proposed rule applicable to Boeing Model 737 series airplanes (reference Docket No. 95–NM–111–AD; 60 FR 55673, November 2, 1995).

The FAA concurs in part. The FAA finds that the 1,000-hour leak check interval is acceptable for most of the valves requested by the commenter. However, based on data received, only 10101000BB2 series valves having serial number 0011 and higher are acceptable for this leak check interval. The final rule has been revised accordingly.

Request for Increase in Leak Check Interval for All Shaw Aero Valves

This same commenter requests that proposed paragraph (a)(1) and (b)(2)(i) be revised to permit the leak check interval of 1,000 hours for specified Shaw Aero valves to be increased to 2,000 hours upon the revision of an operator's maintenance procedures in accordance with the proposal and the submittal of data to substantiate the longer interval.

The FAA does not consider that any change to the rule is necessary based on this commenter's request. Paragraph (c) of the final rule provides a procedure for collecting and submitting data to substantiate an increase in the leak check interval for any valve. The procedure specified in that paragraph is the appropriate one to follow for requesting any such increase in the leak check interval.

Request To Increase Leak Check Interval for Certain Kaiser Valves

One commenter requests that proposed paragraphs (a)(1) and (b)(2)(i) be revised to increase the 1,000-hour leak check interval for Kaiser valves having part numbers 0218–0026 and 0218–0032. The commenter requests that the interval be increased to 2,500 hours based on qualification and test report data submitted.

The FAA cannot concur with the commenter's request since insufficient data was submitted to support a longer inspection interval.

Request for Special Procedures for Systems With ''Interlock'' Mechanisms

One commenter requests that proposed paragraph (b)(2)(ii) be revised to include different requirements for systems that incorporate an ''interlock'' mechanism that prevents the closure of the outer cap if the ''donut'' is not installed. This commenter states that if the functioning of the interlock mechanism is verified, the requirement for pressure leak checks should be similar to the checks of other valves that have both an inner and an outer seal.

The FAA does not concur. Though the interlock mechanism ensures that the donut is installed, it does not ensure that the donut is in good condition. This type of valve, therefore, should be inspected at the same interval as other ''donut valves,'' unless data to substantiate a longer inspection interval can be provided. For this type of valve, the inner seal (the ''donut'') can be leak checked and the outer cap seal and seal surface can be inspected for wear in accordance with the procedures specified in paragraph (b)(2)(ii)(B) of the final rule.

Request To Allow Installation of an Alternative Lock Cap

One commenter requests that proposed paragraph (d) be revised to allow the installation of a ¼-turn ball lock cap as an alternative to the proposed lever lock cap. This commenter, a non-U.S. operator, states that its fleet is already equipped with these lock caps and the commenter considers them equivalent to the caps that would be required by the AD.

The FAA does not concur. Service experience has shown that, on many occasions, caps have been missing from the airplane. The lever lock cap installation required by this final rule secures the cap to the airplane better than other types of cap installations that the FAA currently knows of. However, under the provisions of paragraph (f) of this final rule, the FAA would consider approval of the use of other types of caps as an alternative method of compliance if sufficient data are presented to justify the use of a different type of cap.

Request To Address Need for Heaters on Flush/Fill Lines

This same commenter indicates that the proposed installation of caps on the flush/fill lines, as would be required by paragraph (d) of the proposal, also may require the installation of heaters. Without such heaters, residual water will collect at the flush/fill nipples and freeze, thus hindering maintenance. This will increase the costs associated with the proposed rule.

The FAA does not concur with the commenter's observation. Typically, caps already are installed on airplanes; this AD will require the installation of only a particular style of cap, and may not change the possible need for heaters on some airplanes. If the lines are allowed to drain thoroughly before the cap is closed, the need for heaters also would be minimized or eliminated.

Request for Permission To Use Alternative Check Valves on Flush/Fill Line

Several commenters request that proposed paragraph (d) be revised to permit the use of Monogram 4803–86 series check valves on flush/fill lines as an alternative to the proposed lever/lock caps. These commenters point out that Monogram check valves with similar design characteristics were approved previously by the FAA as an acceptable alternative item for compliance with a similar proposed AD that is applicable to Boeing Model 737 series airplanes (reference Docket No. 95–NM–111–AD).

The FAA concurs with the commenters' request. Paragraph (d) of the final rule has been revised to specify that installation of Monogram 4803–86 series check valves on the flush/fill lines is an acceptable action for compliance.

Additionally, paragraphs (a)(4) and (b)(3) of the final rule have been revised to provide the necessary instructions for replacing the O-rings associated with the Monogram 4803–86 series check valve, and for testing the check valve for proper operation.

Request for Revision of Cost Impact Information

One commenter states that the cost impact information, as explained in the preamble to the proposal, indicated that required parts for installing a cap on the flush/fill line would cost $275 per airplane. The commenter states that the cost of parts is $275 per unit; based on an average of 8 units per airplane, the cost per airplane is $2,200.

The FAA concurs. The cost information presented in the proposal inadvertently indicated the cost per unit, rather than the total cost per airplane. The commenter's figures are correct and the cost impact discussion, below, has been revised accordingly.

Conclusion

After careful review of the available data, including the comments noted above, the FAA has determined that air safety and the public interest require the adoption of the rule with the changes previously described. The FAA has determined that these changes will neither increase the economic burden on any operator nor increase the scope of the AD.

Cost Impact

There are approximately 435 Model DC–10 series airplanes and Model MD–11F airplanes of the affected design in the worldwide fleet. The FAA estimates that 285 airplanes of U.S. registry, and 18 U.S. operators, will be affected by this proposed AD.

For airplanes in the passenger configuration, the estimated costs associated with the requirements of this AD are as follows:

1. *Leak checks.* It will take approximately 4 work hours per airplane lavatory drain to accomplish each leak check, at an average labor cost of $60 per work hour. There normally are two drains per airplane. Depending upon the type of valve installed and the flight utilization rate of the airplane, airplanes will be required to be inspected as few as 3 times per year or as many as 15 times per year. Based on these figures, the cost impact of the proposed leak check requirement on U.S. operators is expected to be between $1,440 and $7,200 per airplane per year.

2. *Inspections.* Should an operator elect to perform the inspection of the service panel drain valve cap/door seal and seal mating surface, the inspection will take approximately 2 work hours to accomplish, at an average labor cost of $60 per work hour. Depending upon the type of valves installed and the flight utilization rate of the airplane, airplanes will be required to be inspected as few as 3 times per year or as many as 15 times per year. Based on these figures, the cost impact of the inspection requirements on U.S. operators will be between $360 and $1,800 per airplane per year.

3. *Installation of cap on flush/fill line.* This installation will take approximately 2 work hours to accomplish, at an average labor cost of $60 per work hour. The cost of required parts is estimated to be $2,200 per airplane. (There are 8 flush/fill lines per airplane, and parts for each line will cost approximately $275.) There currently are 175 passenger-configured airplanes of U.S. registry that will be subject to this requirement. Based on these figures, the cost impact of the installation requirement on U.S. operators is expected to be $553,000, or $3,160 per airplane.

For airplanes in the freighter configuration, the estimated costs associated with the requirements of this AD are as follows:

1. *Leak checks.* It will take approximately 4 work hours per airplane lavatory drain to accomplish each leak check, at an average labor cost of $60 per work hour. There normally is one drain per airplane. Depending upon the type of valve installed and the flight utilization rate of the airplane, airplanes will be required to be inspected as few as 3 times per year or as many as 15 times per year. Based on these figures, the cost impact of the leak check requirement on U.S. operators of these airplanes is expected to be between $720 and $3,600 per airplane per year.

2. *Inspections.* Should an operator elect to perform the inspection of the service panel drain valve cap/door seal and seal mating surface, the inspection will take approximately 1 work hour to accomplish, at an average labor cost of $60 per work hour. Depending upon the type of valves installed and the flight utilization rate of the airplane, airplanes will be required to be inspected as few as 3 times per year or as many as 15 times per year. Based on these figures, the cost impact of the inspection requirements on U.S. operators of these airplanes will be between $180 and $900 per airplane per year.

3. *Installation of cap on flush/fill line.* This installation will take approximately 2 work hours to accomplish, at an average labor cost of $60 per work hour. The cost of required parts is estimated to be $275 per airplane. (There is 1 flush/fill line per airplane.) There currently are 110 freighter-configured airplanes of U.S. registry that will be subject to this requirement. Based on these figures, the cost impact of the installation requirement on U.S. operators of these airplanes is expected to be $43,450, or $395 per airplane.

The number of required work hours, as indicated above, is presented as if the accomplishment of the actions required by this AD were to be conducted as ''stand alone'' actions. However, in actual practice, these actions could be accomplished coincidentally or in combination with normally scheduled airplane inspections and other maintenance program tasks. Therefore, the actual number of necessary ''additional'' work hours will be minimal in many instances. Additionally, any costs associated with special airplane scheduling should be minimal.

In addition to the costs discussed above, for those operators who elect to comply with paragraph (b) of this AD action, the FAA estimates that it will take approximately 40 work hours per operator to incorporate the lavatory drain system leak check procedures into the maintenance programs, at an average labor cost of $60 per work hour. Based on these figures, the total cost impact of the maintenance revision requirement of this AD on the 18 affected U.S. operators is estimated to be $43,200, or $2,400 per operator.

The cost impact figures discussed above are based on assumptions that no operator has yet accomplished any of the requirements of this AD action, and that no operator would accomplish those actions in the future if this AD were not adopted.

The FAA recognizes that the obligation to maintain aircraft in an airworthy condition is vital, but sometimes expensive. Because AD's require specific actions to address specific unsafe conditions, they appear to impose costs that would not otherwise be borne by operators. However, because of the general obligation of operators to maintain aircraft in an airworthy condition, this appearance is deceptive. Attributing those costs solely to the issuance of this AD is unrealistic because, in the interest of maintaining safe aircraft, prudent operators would accomplish the required actions even if they were not required to do so by the AD.

A full cost-benefit analysis has not been accomplished for this AD. As a matter of law, in order to be airworthy, an aircraft must conform to its type

design and be in a condition for safe operation. The type design is approved only after the FAA makes a determination that it complies with all applicable airworthiness requirements. In adopting and maintaining those requirements, the FAA has already made the determination that they establish a level of safety that is cost-beneficial. When the FAA, as in this AD, makes a finding of an unsafe condition, this means that the original cost-beneficial level of safety is no longer being achieved and that the required actions are necessary to restore that level of safety. Because this level of safety has already been determined to be cost-beneficial, a full cost-benefit analysis for this AD would be redundant and unnecessary.

Regulatory Impact

The regulations adopted herein will not have substantial direct effects on the States, on the relationship between the national government and the States, or on the distribution of power and responsibilities among the various levels of government. Therefore, in accordance with Executive Order 12612, it is determined that this final rule does not have sufficient federalism implications to warrant the preparation of a Federalism Assessment.

For the reasons discussed above, I certify that this action (1) is not a ''significant regulatory action'' under Executive Order 12866; (2) is not a ''significant rule'' under DOT Regulatory Policies and Procedures (44 FR 11034, February 26, 1979); and (3) will not have a significant economic impact, positive or negative, on a substantial number of small entities under the criteria of the Regulatory Flexibility Act. A final evaluation has been prepared for this action and it is contained in the Rules Docket. A copy of it may be obtained from the Rules Docket at the location provided under the caption **ADDRESSES**.

List of Subjects in 14 CFR Part 39

Air transportation, Aircraft, Aviation safety, Safety.

Adoption of the Amendment

Accordingly, pursuant to the authority delegated to me by the Administrator, the Federal Aviation Administration amends part 39 of the Federal Aviation Regulations (14 CFR part 39) as follows:

PART 39—AIRWORTHINESS DIRECTIVES

1. The authority citation for part 39 continues to read as follows:

Authority: 49 U.S.C. 106(g), 40113, 44701.

§ 39.13 [Amended]

2. Section 39.13 is amended by adding the following new airworthiness directive:

96–12–18 McDonnell Douglas: Amendment 39–9661. Docket 95–NM–120–AD.

Applicability: Model DC–10 series airplanes and Model MD–11F series airplanes; equipped with a lavatory drainage system, forward or aft; certificated in any category.

Note 1: This AD applies to each airplane identified in the preceding applicability provision, regardless of whether it has been modified, altered, or repaired in the area subject to the requirements of this AD. For airplanes that have been modified, altered, or repaired so that the performance of the requirements of this AD is affected, the owner/operator must request approval for an alternative method of compliance in accordance with paragraph (f) of this AD. The request should include an assessment of the effect of the modification, alteration, or repair on the unsafe condition addressed by this AD; and, if the unsafe condition has not been eliminated, the request should include specific proposed actions to address it.

Compliance: Required as indicated, unless previously accomplished.

To prevent engine damage, airframe damage, and/or a hazard to persons or property on the ground as a result of ''blue ice'' that has formed from leakage of the lavatory drain system and dislodged from the airplane, accomplish the following:

Note 2: The toilet dump valve leak checks required by this AD may be performed by filling the toilet tank with water/rinsing fluid to a level such that the bowl is approximately half full (at least 2 inches above the flapper in the bowl) and checking for leakage after a period of 5 minutes.

(a) Except as provided in paragraph (b) of this AD, accomplish the applicable procedures specified in paragraphs (a)(1), (a)(2), (a)(3), (a)(4), and (a)(5) of this AD. If the individual waste drain system panel incorporates more than one type of valve, the inspection interval that applies to that panel is determined by the component with the longest inspection interval allowed. Each of the components must be inspected or tested at that time at each service panel location.

(1) Within 1,000 flight hours after the effective date of this AD, and thereafter at intervals not to exceed 1,000 flight hours, accomplish the applicable procedures specified in paragraphs (a)(1)(i) and (a)(1)(ii) of this AD for each lavatory drain system with a service panel drain valve installed that is listed in Table 1, below:

TABLE 1.—VALVES REQUIRING LEAK CHECKS AT 1,000-FLIGHT-HOUR INTERVALS

Manufacturer	Part No.	Serial No.
Kaiser Electroprecision	0218–0032 series	All serial numbers.
Shaw Aero Devices	1010100C–N (or higher dash number)	All serial numbers.
Shaw Aero Devices	1010100B–A–1	0115 through 0121, 0146 through 0164, 0180 and higher.
Shaw Aero Devices	10101000BA2	130 and higher.
Shaw Aero Devices	10101000BB2	0011 and higher.
Shaw Aero Devices	331 series	All serial numbers.
Shaw Aero Devices	332 series	All serial numbers.
Pneudraulics	9527 series	All serial numbers.

(i) Conduct a leak check of the dump valve and drain valve. The service panel drain valve leak check must be performed with a minimum of 3 PSID applied across the valve. Both the inner door/closure device and the outer cap/door must be leak checked.

(ii) For service panel valves that have an inner seal: In lieu of pressure testing, the outer cap seal and seal surface may be visually inspected for damage or wear. Any damaged parts must be replaced or repaired prior to further flight, or the affected lavatory(s) must be drained and placarded inoperative until repairs can be accomplished.

(2) Within 600 flight hours after the effective date of this AD, and thereafter at intervals not to exceed 600 flight hours, accomplish the applicable procedures specified in paragraphs (a)(2)(i) and (a)(2)(ii) of this AD for each lavatory drain system with a service panel drain valve installed that is listed in Table 2, below:

TABLE 2.—VALVES REQUIRING LEAK CHECKS AT 600–FLIGHT HOUR INTERVALS

Manufacturer	Part No.	Serial No.
Kaiser Electroprecision.	0218–0026 series.	All serial numbers.

TABLE 2.—VALVES REQUIRING LEAK CHECKS AT 600–FLIGHT HOUR INTERVALS—Continued

Manufacturer	Part No.	Serial No.
Shaw Aero Devices.	1010100C series, except as called out in Table 1, above,.	
Shaw Aero Devices.	1010100B series, except as called out in Table 1, above.	

(i) Conduct a leak check of the dump valve and the service panel drain valve. The service panel drain valve leak check must be performed with a minimum 3 PSID applied across the valve. Both the inner door/closure device and the outer cap/door must be leak checked.

(ii) For service panel valves that have an inner seal: In lieu of pressure testing, the outer cap seal and seal surface may be visually inspected for damage or wear. Any damaged parts must be replaced or repaired prior to further flight, or the affected lavatory(s) must be drained and placarded inoperative until repairs can be accomplished.

(3) For each lavatory drain system not addressed in paragraph (a)(1) or (a)(2) of this AD: Within 200 flight hours after the effective date of this AD, and thereafter at intervals not to exceed 200 flight hours, accomplish the following procedures:

(i) Conduct a leak check of the dump valve and the service panel drain valve. The service panel drain valve leak check must be performed with a minimum 3 PSID applied across the valve. If the service panel drain valve has an inner door with a second positive seal, both the inner door and the outer cap/door must be leak checked.

(ii) For service panel valves that have an inner seal: In lieu of pressure testing, the outer cap seal and seal surface may be visually inspected for damage or wear. Any damaged parts must be replaced or repaired prior to further flight, or the affected lavatory(s) must be drained and placarded inoperative until repairs can be accomplished.

Note 3: Some service panel valves have an inner seal that is closed when the outer cap is closed. For this type of valve, the fluid leakage from the outer cap can be checked only if the inner seal is removed; when the inner seal is in place, it prevents any fluid from reaching the outer cap seal. For this type of valve, the actions specified in paragraph (a)(3)(ii) are provided to allow inspection of the seal and seal surface of the outer cap seal as an alternative to leak checking the outer seal itself.

(4) For flush/fill lines: Within 5,000 flight hours after the effective date of this AD, and thereafter at intervals not to exceed 5,000 flight hours, accomplish either of the procedures specified in paragraphs (a)(4)(i) or (a)(4)(ii) of this AD, as appropriate for the airplane's flush/fill line installation:

(i) For airplanes equipped with a flush/fill line cap, accomplish either paragraph (a)(4)(i)(A) or (a)(4)(i)(B) of this AD:

(A) Conduct a leak check of the flush/fill line cap. This leak check must be made with a minimum of 3 PSID applied across the cap. Or

(B) Replace the seals on the toilet tank anti-siphon (check) valve and the flush/fill line cap. Additionally, perform a leak check of the toilet tank anti-siphon (check) valve with a minimum of 3 PSID across the valve.

Note 4: The Inspection/Check procedure specified in DC–10 Maintenance Manual, chapter 38–30–00, pages 601 and 602, dated June 1, 1993, may be referred to as guidance for the procedures required by this paragraph.

(ii) For airplanes equipped with a check valve vacuum breaker, Monogram part number series 4803–86: Replace the O-rings /seals in the valve and test the check valve and vacuum breaker sections of the valve for proper operation, in accordance with the manufacturer's component maintenance/ overhaul manual.

(5) If a leak is discovered during any leak check required by paragraph (a) of this AD, prior to further flight, accomplish either of the procedures specified in paragraph (a)(5)(i) or (a)(5)(ii) of this AD:

(i) Repair the leak and retest. Or

(ii) Drain the affected lavatory system and placard the lavatory inoperative until repairs can be accomplished.

(b) As an alternative to the requirements of paragraph (a) of this AD: Within 180 days after the effective date of this AD, revise the FAA-approved maintenance program to include the requirements specified in paragraphs (b)(1), (b)(2), (b)(3), (b)(4), (b)(5), and (b)(6) of this AD.

(1) For each lavatory drain system: Within 5,000 flight hours after revision of the maintenance program in accordance with paragraph (b) of this AD, and thereafter at intervals not to exceed 18 months, replace the valve seals. Any revision to this replacement schedule must be approved by the Manager, Los Angeles Aircraft Certification Office (ACO), FAA, Transport Airplane Directorate.

(2) Conduct periodic leak checks of the lavatory drain systems in accordance with the applicable schedule specified in paragraphs (b)(2)(i), (b)(2)(ii), and (b)(2)(iii) of this AD. If the individual waste drain system panel incorporates more than one type of valve, the inspection interval that applies to that panel is determined by the component with the longest inspection interval allowed. Each of the components must be inspected/ tested at that time at each service panel location. Any revision to the leak check schedule must be approved by the Manager, Los Angeles ACO, FAA, Transport Airplane Directorate.

(i) Within 1,000 flight hours after revising the maintenance program in accordance with paragraph (b) of this AD, and thereafter at intervals not to exceed 1,000 flight hours, accomplish the applicable procedures specified in paragraphs (b)(2)(i)(A) and (b)(2)(i)(B) of this AD for each lavatory drain system with a service panel drain valve installed that is listed in Table 3, below:

TABLE 3.—VALVES REQUIRING LEAK CHECKS AT 1,000-FLIGHT HOUR INTERVALS

Manufacturer	Part No.	Serial No.
Kaiser Electroprecision	0218–0032 series	All serial numbers.
Kaiser Electroprecision	0218–0026 series	All serial numbers.
Shaw Aero Devices	1010100C series	All serial numbers.
Shaw Aero Devices	1010100B series	All series numbers.
Shaw Aero Devices	10101000BA2	130 and higher.
Shaw Aero Devices	10101000BB2	0011 and higher.
Shaw Aero Devices	331 series	All serial numbers.
Shaw Aero Devices	332 series	All serial numbers.
Pneudraulics	9527 series	All serial numbers.

(A) Conduct leak checks of the dump valve and service panel drain valve. The service panel drain leak must be performed with a minimum of 3 PSID applied across the valve. Only the inner door/closure device of the service panel drain valve must be leak checked. And

(B) Visually inspect the service panel drain valve outer cap/door seal and seal mating surface for wear or damage that may cause leakage. Any worn or damaged seal must be replaced, and any damaged seal mating surface must be repaired or replaced, prior to further flight, in accordance with the valve manufacturer's maintenance manual.

(ii) Within 200 flight hours after revising the maintenance program in accordance with paragraph (b) of this AD, and thereafter at intervals not to exceed 200 flight hours, accomplish the applicable procedures in

paragraph (b)(2)(ii)(A) and (b)(2)(ii)(B) of this AD for each lavatory drain system with a lavatory drain system valve that incorporates one of the valves listed in Table 4, below:

TABLE 4.—VALVES REQUIRING LEAK CHECKS AT 200-FLIGHT HOUR INTERVALS

Manufacturer	Part No.	Serial No.
Kaiser Electroprecision.	4259–20 or 4259–31 ''donut'' assemblies (or substitute assemblies from another manufacturer).	All serial numbers.
Kaiser Roylyn	2651–231.	
Kaiser Roylyn	2651–259.	

(A) Conduct leak checks of the dump valve and the service panel drain valve. The service panel drain valve leak check must be performed with a minimum 3 PSID applied across the valve. Both the donut and the outer cap/door must be leak checked.

(B) For service panel valves that have an inner seal: In lieu of pressure testing, visually inspect the outer cap seal and seal surface for damage or wear. Any damaged parts must be replaced or repaired prior to further flight, or the affected lavatory(s) must be drained and placarded inoperative until repairs can be accomplished.

(iii) For each lavatory drain system that incorporates any other type of approved valves: Within 400 flight hours after revising the maintenance program in accordance with paragraph (b) of this AD, and thereafter at intervals not to exceed 400 flight hours accomplish both of the following procedures:

(A) Conduct leak checks of the dump valve and the service panel drain valve. The service panel drain valve leak check must be performed with a minimum 3 PSID applied across the valve. If the service panel drain valve has an inner door/closure device with a second positive seal, only the inner door must be leak checked. And

(B) If the valve has an inner door/closure device with a second positive seal: Visually inspect the service panel drain valve outer door/cap seal and seal mating surface for wear or damage that may cause leakage. Any worn or damaged seal must be replaced and any damaged seal mating surface must be repaired or replaced, prior to further flight, in accordance with the valve manufacturer's maintenance manual.

(3) For flush/fill lines: Within 5,000 flight hours after the effective date of this AD, and thereafter at intervals not to exceed 5,000 flight hours, accomplish the procedure specified in either paragraph (b)(3)(i) or (b)(3)(ii) of this AD, as appropriate for the airplane's flush/fill line installation:

(i) For airplanes equipped with a flush/fill line cap, accomplish either paragraph (b)(3)(i)(A) or (b)(3)(i)(B) of this AD:

(A) Conduct a leak check of the flush/fill line cap. This leak check must be made with a minimum of 3 PSID applied across the cap. Or

(B) Replace the seals on the toilet tank anti-siphon (check) valve and the flush/fill line cap. Additionally, perform a leak check of the toilet tank anti-siphon (check) valve with a minimum of 3 PSID across the valve.

Note 5: The Inspection/Check procedure specified in DC–10 Maintenance Manual, chapter 38–30–00, pages 601 and 602, dated June 1, 1993, may be referred to as guidance for the procedures required by this paragraph.

(ii) For airplanes equipped with a check valve vacuum breaker, Monogram part number series 4803–86: Replace the O-rings/seals in the valve and test the check valve and vacuum breaker sections of the valve for proper operation, in accordance with the manufacturer's component maintenance/overhaul manual.

(4) Provide procedures for accomplishing visual inspections to detect leakage, to be conducted by maintenance personnel at intervals not to exceed 4 calendar days or 45 flight hours, whichever occurs later.

(5) Provide procedures for reporting leakage. These procedures shall provide that any ''horizontal blue streak'' findings must be reported to maintenance and that, prior to further flight, the leaking system shall either be repaired, or be drained and placarded inoperative.

(6) Provide training programs for maintenance and servicing personnel that include information on ''Blue Ice Awareness'' and the hazards of ''blue ice.''

(c) For operators who elect to comply with paragraph (b) of this AD: Any revision to (i.e., extension of) the leak check intervals required by paragraph (b) of this AD must be approved by the Manager, Los Angeles ACO, FAA, Transport Airplane Directorate. Requests for such revisions must be submitted to the Manager of the Los Angeles ACO through the FAA Principal Maintenance Inspector (PMI), and must include the following information:

(1) The operator's name;

(2) A statement verifying that all known cases/indications of leakage or failed leak tests are included in the submitted material;

(3) The type of valve (make, model, manufacturer, vendor part number, and serial number);

(4) The period of time covered by the data;

(5) The current FAA leak check interval;

(6) Whether or not seals have been replaced between the seal replacement intervals required by this AD;

(7) Whether or not leakage has been detected between leak check intervals required by this AD, and the reason for leakage (i.e., worn seals, foreign materials on sealing surface, scratched or damaged sealing surface or valve, etc.);

(8) Whether or not any leak check was conducted without first inspecting or cleaning the sealing surfaces, changing the seals, or repairing the valve. [If such activities have been accomplished prior to conducting the periodic leak check, that leak check shall be recorded as a ''failure'' for purposes of the data required for this request submission. The exception to this is the normally scheduled seal change in accordance with paragraph (b)(1) of this AD. Performing this scheduled seal change prior to a leak check will not cause that leak check to be recorded as a failure.]

Note 6: Requests for approval of revised leak check intervals may be submitted in any format, provided that the data give the same level of assurance specified in paragraph (c) of this AD.

Note 7: For the purposes of expediting resolution of requests for revisions to the leak check intervals, the FAA suggests that the requester summarize the raw data; group the data gathered from different airplanes (of the same model) and drain systems with the same kind of valve; and provide a recommendation from pertinent industry group(s) and/or the manufacturer specifying an appropriate revised leak check interval.

(d) For all airplanes: Within 5,000 flight hours after the effective date of this AD, accomplish the requirements of either paragraph (d)(1) or (d)(2) of this AD:

(1) Install a lever/lock cap on the flush/fill lines for all lavatory service panels. The cap must be either an FAA-approved lever/lock cap; or a lever/lock cap installed in accordance with McDonnell Douglas Service Bulletin 38–65 (for Model DC–10 series airplanes) or Service Bulletin 38–39 [for Model MD–11F series airplanes (freighter)], as applicable. Or

(2) Install a Monogram 4803–86 series check valve on the flush/fill lines for all lavatory service panels.

(e) For any affected airplane acquired after the effective date of this AD: Before any operator places into service any airplane subject to the requirements of this AD, a schedule for the accomplishment of the leak checks required by this AD shall be established in accordance with either paragraph (e)(1) or (e)(2) of this AD, as applicable. After each leak check has been performed once, each subsequent leak check must be performed in accordance with the new operator's schedule, in accordance with either paragraph (a) or (b) of this AD as applicable.

(1) For airplanes previously maintained in accordance with this AD, the first leak check to be performed by the new operator must be accomplished in accordance with the previous operator's schedule or with the new operator's schedule, whichever would result in the earlier accomplishment date for that leak check.

(2) For airplanes that have not been previously maintained in accordance with this AD, the first leak check to be performed by the new operator must be accomplished prior to further flight, or in accordance with a schedule approved by the FAA PMI, but within a period not to exceed 200 flight hours.

(f) An alternative method of compliance or adjustment of the compliance time that provides an acceptable level of safety may be used if approved by the Manager, Los Angeles ACO, FAA, Transport Airplane Directorate. Operators shall submit their requests through an appropriate FAA PMI, who may add comments and then send it to the Manager, Los Angeles ACO.

Note 8: Information concerning the existence of approved alternative methods of

compliance with this AD, if any, may be obtained from the Los Angeles ACO.

Note 9: For any valve that is not eligible for the extended leak check intervals of this AD: To be eligible for the leak check interval specified in paragraphs (a)(1) and (b)(2)(i), the service history data of the valve must be submitted to the Manager, Los Angeles ACO, FAA, Transport Airplane Directorate, with a request for an alternative method of compliance with this AD. The request should include an analysis of known failure modes for the valve, if it is an existing design, and known failure modes of similar valves. Additionally, the request should include an explanation of how design features will preclude these failure modes, results of qualification tests, and approximately 25,000 flight hours or 25,000 flight cycles of service history data, including a winter season, collected in accordance with the requirements of paragraph (c) of this AD or a similar program.

(g) Special flight permits may be issued in accordance with sections 21.197 and 21.199 of the Federal Aviation Regulations (14 CFR 21.197 and 21.199) to operate the airplane to a location where the requirements of this AD can be accomplished.

(h) This amendment becomes effective on July 12, 1996.

Issued in Renton, Washington, on June 3, 1996.

Darrell M. Pederson,

Acting Manager, Transport Airplane Directorate, Aircraft Certification Service.

[FR Doc. 96–14386 Filed 6–6–96; 8:45 am]

BILLING CODE 4910–13–U

14 CFR Part 97

[Docket No. 28594; Amdt. No. 1732]

Standard Instrument Approach Procedures; Miscellaneous Amendments

AGENCY: Federal Aviation Administration (FAA), DOT.

ACTION: Final rule.

SUMMARY: This amendment establishes, amends, suspends, or revokes Standard Instrument Approach Procedures (SIAPs) for operations at certain airports. These regulatory actions are needed because of the adoption of new or revised criteria, or because of changes occurring in the National Airspace System, such as the commissioning of new navigational facilities, addition of new obstacles, or changes in air traffic requirements. These changes are designed to provide safe and efficient use of the navigable airspace and to promote safe flight operations under instrument flight rules at the affected airports.

DATES: An effective date for each SIAP is specified in the amendatory provisions.

Incorporation by reference—approved by the Director of the Federal Register on December 31, 1980, and reapproved as of January 1, 1982.

ADDRESSES: Availability of matters incorporated by reference in the amendment is as follows:

For Examination—

1. FAA Rules Docket, FAA Headquarters Building, 800 Independence Avenue, SW., Washington, DC 20591;

2. The FAA Regional Office of the region in which the affected airport is located; or

3. The Flight Inspection Area Office which originated the SIAP.

For Purchase—Individual SIAP copies may be obtained from:

1. FAA Public Inquiry Center (APA–200), FAA Headquarters Building, 800 Independence Avenue, SW., Washington, DC 20591; or

2. The FAA Regional Office of the region in which the affected airport is located.

By Subscription—Copies of all SIAPs, mailed once every 2 weeks, are for sale by the Superintendent of Documents, U.S. Government Printing Office, Washington, DC 20402.

FOR FURTHER INFORMATION CONTACT: Paul J. Best, Flight Procedures Standards Branch (AFS–420), Technical Programs Division, Flight Standards Service, Federal Aviation Administration, 800 Independence Avenue, SW., Washington, DC 20591; telephone (202) 267–8277.

SUPPLEMENTARY INFORMATION: This amendment to part 97 of the Federal Aviation Regulation (14 CFR part 97) establishes, amends, suspends, or revokes Standard Instrument Approach Procedures (SIAPs). The complete regulatory description of each SIAP is contained in official FAA from documents which are incorporated by reference in this amendment under 5 U.S.C. 552(a), 1 CFR part 51, and § 97.20 of the Federal Aviation Regulations (FAR). The applicable FAA Forms are identified as FAA Forms 8260–3, 8260–4, and 8260–5. Materials incorporated by reference are available for examination or purchase as stated above.

The large number of SIAPs, their complex nature, and the need for a special format make their verbatim publication in the Federal Register expensive and impractical. Further, airmen do not use the regulatory text of the SIAPs, but refer to their graphic depiction on charts printed by publishers of aeronautical materials. Thus, the advantages of incorporation by reference are realized and publication of the complete description of each SIAP contained in FAA form documents is unnecessary. The provisions of this amendment state the affected CFR (and FAR) sections, with the types and effective dates of the SIAPs. This amendment also identifies the airport, its location, the procedure identification and the amendment number.

The Rule

This amendment to part 97 is effective upon publication of each separate SIAP as contained in the transmittal. Some SIAP amendments may have been previously issued by the FAA in a National Flight Data Center (FDC) Notice to Airmen (NOTAM) as an emergency action of immediate flight safety relating directly to published aeronautical charts. The circumstances which created the need for some SIAP amendments may require making them effective in less than 30 days. For the remaining SIAPs, an effective date at least 30 days after publication is provided.

Further, the SIAPs contained in this amendment are based on the criteria contained in the U.S. Standard for Terminal Instrument Approach Procedures (TERPS). In developing these SIAPs, the TERPS criteria were applied to the conditions existing or anticipated at the affected airports. Because of the close and immediate relationship between these SIAPs and safety in air commerce, I find that notice and public procedure before adopting these SIAPs are impracticable and contrary to the public interest and, where applicable, that good cause exists for making some SIAPs effective in less than 30 days.

The FAA has determined that this regulation only involves an established body of technical regulations for which frequent and routine amendments are necessary to keep them operationally current. It, therefore—(1) is not a ''significant regulatory action'' under Executive Order 12866; (2) is not a ''significant rule'' under DOT Regulatory Policies and Procedures (44 FR 11034; February 26, 1979); and (3) does not warrant preparation of a regulatory evaluation as the anticipated impact is so minimal. For the same reason, the FAA certifies that this amendment will not have a significant economic impact on a substantial number of small entities under the criteria of the Regulatory Flexibility Act.

List of Subjects in 14 CFR Part 97

Air Traffic Control, Airports, Navigation (Air).

Issued in Washington, DC on May 31, 1996.

Thomas C. Accardi,

Director, Flight Standards Service.

Adoption of the Amendment

Accordingly, pursuant to the authority delegated to me, part 97 of the Federal Aviation Regulations (14 CFR part 97) is amended by establishing, amending, suspending, or revoking Standard Instrument Approach Procedures, effective at 0901 UTC on the dates specified, as follows:

PART 97—STANDARD INSTRUMENT APPROACH PROCEDURES

1. The authority citation for part 97 is revised to read as follows:

Authority: 49 U.S.C. 106(g), 40103, 40113, 40120, 44701; and 14 CFR 11.49(b)(2).

2. Part 97 is amended to read as follows:

§§ 97.23, 97.25, 97.27, 97.29, 97.31, 97.33, 97.35 [Amended]

Be amending: § 97.23 VOR, VOR/DME, VOR or TACAN, and VOR/DME or TACAN; § 97.25 LOC, LOC/DME, LDA, LDA/DME, SDF, SDF/DME; § 97.27 NDB, NDB/DME; § 97.29 ILS, ILS/DME, ISMLS, MLS, MLS/DME, MLS/RNAV; § 97.31 RADAR SIAPs; § 97.33 RNAV SIAPs; and § 97.35 COPTER SIAPs, identified as follows:

. . . *Effective June 20, 1996*

Bessemer, AL, Bessemer, LOC/DME RWY 5, Orig
Sacramento, CA, Mather Field, ILS RWY 22L, Orig
Miami, FL, Opa Locka, ILS RWY 12, Orig
Miami, FL, Opa Locka, ILS/DME RWY 27R, Orig
Marietta, GA, Cobb County-McCollum Field, LOC RWY 27, Amdt 3, CANCELLED
Marietta, GA, Cobb County-McCollum Field, ILS RWY 27, Orig
Pipestone, MN Pipestone Muni, NDB or GPS RWY 36, Amdt 6
Statesville, NC, Statesville Muni, VOR/DME RWY 10, Amdt 7
Statesville, NC, Statesville Muni, LOC RWY 10, Orig
Statesville, NC, Statesville Muni, NDB RWY 20, Amdt 8, CANCELLED
Statesville, NC, Statesville Muni, NDB RWY 10, Orig
Statesville, NC, Statesville Muni, GPS RWY 10, Orig
Norfolk, VA, Norfolk Intl, GPS RWY 14, Orig
Norfolk, VA, Norfolk Intl, GPS RWY 32, Orig

. . . *Effective August 15, 1996*

Andalusia/Opp, AL, Andalusia-Opp, GPS RWY 29, Orig
Lompoc, CA, Lompoc, GPS RWY 25, Orig
Placerville, CA, Placerville, GPS RWY 5, Amdt 1
Ramona, CA, Ramona, GPS RWY 9, Orig
Goshen, IN, Goshen Muni, GPS RWY 9, Orig
Red Wing, MN, Red Wing Muni, GPS RWY 9, Orig
Trenton, NJ, Mercer County, GPS RWY 16, Orig
Trenton, NJ, Mercer County, GPS RWY 34, Orig
Tonopah, NV, Tonopah, GPS RWY 15, Orig
Rutland, VT, Rutland State, GPS RWY 19, Amdt 1
Rutland, VT, Rutland State, LDA 1 RWY 19, Amdt 7

Note: The FAA published an amendment in Docket No. 28564, Amdt 1726 to part 97 of the Federal Aviation Regulations, Vol 61, No 98, Page 25139, dated Monday, May 20, 1996, Section 97.23 effective June 20, 1996, which is amended as follows:

Wentzville, MO, Wentzville, VOR/DME OR GPS–A, Amdt 2, CANCELLED is amended to read:
Wentzville, MO, Wentzville, VOR/DME OR GPS–A, Amdt 1, CANCELLED

[FR Doc. 96–14445 Filed 6–6–96; 8:45 am]

BILLING CODE 4910–13–M

---

14 CFR Part 97

[Docket No. 28595; Amdt. No. 1733]

Standard Instrument Approach Procedures; Miscellaneous Amendments

AGENCY: Federal Aviation Administration (FAA), DOT.

ACTION: Final rule.

SUMMARY: This amendment establishes, amends, suspends, or revokes Standard Instrument Approach Procedures (SIAPs) for operations at certain airports. These regulatory actions are needed because of changes occurring in the National Airspace System, such as the commissioning of new navigational facilities, addition of new obstacles, or changes in air traffic requirements. These changes are designed to provide safe and efficient use of the navigable airspace and to promote safe flight operations under instrument flight rules at the affected airports.

DATES: An effective date for each SIAP is specified in the amendatory provisions.

Incorporation by reference—approved by the Director of the Federal Register on December 31, 1980, and reapproved as of January 1, 1982.

ADDRESSES: Availability of matter incorporated by reference in the amendment is as follows:

For Examination—

1. FAA Rules Docket, FAA Headquarters Building, 800 Independence Avenue, SW., Washington, DC 20591;

2. The FAA Regional Office of the region in which affected airport is located; or

3. The Flight Inspection Area Office which originated the SIAP.

For Purchase—Individual SIAP copies may be obtained from:

1. FAA Public Inquiry Center (APA–200), FAA Headquarters Building, 800 Independence Avenue, SW., Washington, DC 20591; or

2. The FAA Regional Office of the region in which the affected airport is located.

By Subscription—Copies of all SIAPs, mailed once every 2 weeks, are for sale by the Superintendent of Documents, US Government Printing Office, Washington, DC 20402.

FOR FURTHER INFORMATION CONTACT: Paul J. Best, Flight Procedures Standards Branch (AFS–420), Technical Programs Division, Flight Standards Service, Federal Aviation Administration, 800 Independence Avenue, SW., Washington, DC 20591; telephone (202) 267–8277.

SUPPLEMENTARY INFORMATION: This amendment to part 97 of the Federal Aviation Regulations (14 CFR part 97) establishes, amends, suspends, or revokes Standard Instrument Approach Procedures (SIAPs). The complete regulatory description on each SIAP is contained in the appropriate FAA Form 8260 and the National Flight Data Center (FDC)/Permanent (P) Notices to Airmen (NOTAM) which are incorporated by reference in the amendment under 5 U.S.C. 552(a), 1 CFR part 51, and § 97.20 of the Federal Aviations Regulations (FAR). Materials incorporated by reference are available for examination or purchase as stated above.

The large number of SIAPs, their complex nature, and the need for a special format make their verbatim publication in the Federal Register expensive and impractical. Further, airmen do not use the regulatory text of the SIAPs, but refer to their graphic depiction of charts printed by publishers of aeronautical materials. Thus, the advantages of incorporation by reference are realized and publication of the complete description of each SIAP contained in FAA form

documents is unnecessary. The provisions of this amendment state the affected CFR (and FAR) sections, with the types and effective dates of the SIAPs. This amendment also identifies the airport, its location, the procedure identification and the amendment number.

The Rule

This amendment to part 97 of the Federal Aviation Regulations (14 CFR part 97) establishes, amends, suspends, or revokes SIAPs. For safety and timeliness of change considerations, this amendment incorporates only specific changes contained in the content of the following FDC/P NOTAM for each SIAP. The SIAP information in some previously designated FDC/Temporary (FDC/T) NOTAMs is of such duration as to be permanent. With conversion to FDC/P NOTAMs, the respective FDC/T NOTAMs have been cancelled.

The FDC/P NOTAMs for the SIAPs contained in this amendment are based on the criteria contained in the U.S. Standard for Terminal Instrument Approach Procedures (TERPS). In developing these chart changes to SIAPs by FDC/P NOTAMs, the TERPS criteria were applied to only these specific conditions existing at the affected airports. All SIAP amendments in this rule have been previously issued by the FAA in a National Flight Data Center (FDC) Notice to Airmen (NOTAM) as an emergency action of immediate flight safety relating directly to published aeronautical charts. The circumstances which created the need for all these SIAP amendments requires making them effective in less than 30 days.

Further, the SIAPs contained in this amendment are based on the criteria contained in the TERPS. Because of the close and immediate relationship between these SIAPs and safety in air commerce, I find that notice and public procedure before adopting these SIAPs are impracticable and contrary to the public interest and, where applicable, that good cause exists for making these SIAPs effective in less than 30 days.

Conclusion

The FAA has determined that this regulation only involves an established body of technical regulations for which frequent and routine amendments are necessary to keep them operationally current. It, therefore—(1) is not a ''significant regulatory action'' under Executive Order 12866; (2) is not a ''significant rule'' under DOT Regulatory Policies and Procedures (44 FR 11034; February 26, 1979); and (3) does not warrant preparation of a regulatory evolution as the anticipated impact is so minimal. For the same reason, the FAA certifies that this amendment will not have a significant economic impact on a substantial number of small entities under the criteria of the Regulatory Flexibility Act.

List of Subjects in 14 CFR Part 97

Air Traffic Control, Airports, Navigation (Air).

Issued in Washington, DC on May 31, 1996.

Thomas C. Accardi,

Director, Flight Standards Service.

Adoption of the Amendment

Accordingly, pursuant to the authority delegated to me, part 97 of the Federal Aviation Regulations (14 CFR part 97) is amended by establishing, amending, suspending, or revoking Standard Instrument Approach Procedures, effective at 0901 UTC on the dates specified, as follows:

PART 97—STANDARD iNSTRUMENT APPROACH PROCEDURES

1. The authority citation for part 97 is revised to read as follows:

Authority: 49 U.S.C. 40103, 40113, 40120, 44701; 49 U.S.C. 106(g); and 14 CFR 11.49(b)(2).

2. Part 97 is amended to read as follows:

§§ 97.23, 97.25, 97.27, 97.29, 97.31, 97.33, 97.35 [Amended]

By amending: § 97.23 VOR, VOR/DME, VOR or TACAN, and VOR/DME or TACAN; § 97.25 LOC, LOC/DME, LDA, LDA/DME, SDF, SDF/DME; § 97.27 NDB/ DME; § 97.29 ILS, ILS/DME, ISMLS, MLS, MLS/DME, MLS/RNAV; § 97.31 RADAR SIAPs; § 97.33 RNAV SIAPs; and § 97.35 COPTER SIAPs, identified as follows:

. . . EFFECTIVE UPON PUBLICATION

FDC Date	State	City	Airport	FDC Number	SIAP
04/05/96	IA	Iowa City	Iowa City Muni	FDC 6/2087	VOR OR GPS RWY 35 AMDT 10A...
05/17/96	NE	Fremont	Fremont Muni	FDC 6/3054	VOR RWY 13, ORIG...
05/17/96	OH	Dayton	Dayton-Wright Brothers	FDC 6/3053	LOC RWY 20 AMDT 4...
05/20/96	OH	Wilmington	Airborne Airpark	FDC 6/3121	VOR/DME OR GPS RWY 22R AMDT 4A...
05/20/96	OH	Wilmington	Airborne Airpark	FDC 6/3123	VOR RWY 22R AMDT 4A...
05/20/96	OH	Wilmington	Airborne Airpark	FDC 6/3135	NDB RWY 22R AMDT 7A...
05/20/96	OH	Wilmington	Airborne Airpark	FDC 6/3136	ILS RWY 22R AMDT 4...
05/20/96	OH	Wilmington	Airborne Airpark	FDC 6/3137	ILS RWY 4L AMDT 3...
05/20/96	OH	Wilmington	Airborne Airpark	FDC 6/3138	NDB RWY 4L AMDT 2B...
05/21/96	CA	Arcata-Eureka	Arcata	FDC 6/3166	ILS RWY 32 AMDT 29A...
05/21/96	MS	Jackson	Jackson Intl	FDC 6/3164	ILS RWY 15L AMDT 7, ILS RWY 15L (CAT II) AMDT 7, ILS RWY 15L (CAT III) AMDT 7...

. . . EFFECTIVE UPON PUBLICATION—Continued

FDC Date	State	City	Airport	FDC Number	SIAP
05/21/96	OH	Wilmington	Airborne Airpark	FDC 6/3147	VOR/ OR GPS RWY 4L AMDT 5B...
05/24/96	NY	Olean	Cattaraugus County-Olean	FDC 6/3245	LOC RWY 22 AMDT 4...
05/24/96	NY	Olean	Cattaraugus County-Olean	FDC 6/3247	RNAV OR GPS RWY 22 AMDT 4...
05/24/96	NY	Olean	Cattaraugus County-Olean	FDC 6/3248	NDB RWY 22 AMDT 11...
05/24/96	NY	Wellsville	Wellsville Muni-Tarantine Field	FDC 6/3239	LOC RWY 28 AMDT 3...
05/24/96	NY	Wellsville	Wellsville Muni-Tarantine Field	FDC 6/3243	VOR–A AMDT 5...
05/24/96	NY	Wellsville	Wellsville Muni-Tarantine Field	FDC 6/3244	NDB RWY 28 AMDT 6...
05/28/96	FL	Miami	Miami Intl	FDC 6/3287	ILS RWY 9R, AMDT 8A...
05/29/96	NY	Westhampton Beach	The Francis S. Gabreski	FDC 6/3315	ILS RWY 24 AMDT 8A...
05/29/96	NY	Westhampton Beach	The Francis S. Gabreski	FDC 6/3316	NDB OR GPS RWY 24 AMDT 3...
05/29/96	TX	Brenham	Brenham Muni	FDC 6/3306	VOR/DME RWY 16, AMDT 1...
05/29/96	TX	Caldwell	Caldwell Muni	FDC 6/3304	VOR/DME OR GPS–A, AMDT 2...
05/29/96	VA	Manassas	Manassas Regional/Harry P. Davis Field.	FDC 6/3310	NDB OR GPS–A AMDT 8...

[FR Doc. 96–14444 Filed 6–6–96; 8:45 am]
BILLING CODE 4910–13–M

Office of the Secretary

14 CFR Part 399

[Docket No. OST–96–1429]

RIN 2105–AC55

Policies Relating to Rulemaking Proceedings

AGENCY: Office of the Secretary, DOT.

ACTION: Final rule.

SUMMARY: The Office of the Secretary (OST) is amending an outdated policy statement of the Civil Aeronautics Board on rulemaking proceedings to remove obsolete provisions and to cross-reference the Department of Transportation's rulemaking procedures in another part. This action is in response to the President's Regulatory Reinvention Initiative.

EFFECTIVE DATE: This rule is effective June 7, 1996.

ADDRESSES: Docket Management Facility, U.S. Department of Transportation, Room PL–401, 400 Seventh Street, SW., Washington, DC 20590–0001.

FOR FURTHER INFORMATION CONTACT: Gwyneth Radloff, Office of the Assistant General Counsel for Regulation and Enforcement, U.S. Department of Transportation, 400 Seventh Street, SW., Washington, DC 20590–0001, Telephone: (202) 366–9305.

SUPPLEMENTARY INFORMATION: In his Regulatory Reinvention Initiative Memorandum of March 4, 1995, President Clinton directed Federal agencies to conduct a page-by-page review of all of their regulations and to ''eliminate or revise those that are outdated or otherwise in need of reform.'' In response to that directive, the Department has reviewed its aviation economic regulations contained in 14 CFR Chapter II.

This rule is one of several that address reinvention of these regulations. It eliminates obsolete language on rulemaking petitions that changed with the sunset of the Civil Aeronautics Board and the transfer of its remaining functions to the Department of Transportation and replaces it with a cross-reference to the Department's procedural rules. This rule also replaces the reference to the Board in the section 399.73 definition of small business.

This rule is being issued as a final rule because it concerns agency practice and procedure and, therefore, is exempt from prior notice and comment requirements under section 553 (b) (3) (A) of the Administrative Procedure Act (APA). The Department has determined that notice and an opportunity for public comment are impracticable, unnecessary, and contrary to the public interest. These changes are ministerial, removing obsolete and redundant material or making minor technical and terminology changes. These changes will not have substantive impact, and the Department does not anticipate receiving meaningful comments on them. Comment is therefore unnecessary, and it would be contrary to the public interest to delay unnecessarily this effort to eliminate or revise outdated rules. For these reasons, the Department has determined that there is good cause under section 553 (d) (3) of the APA to make this rule effective immediately upon publication.

Regulatory Process Matters

This final rule is not considered a significant regulatory action under section 3(f) of Executive Order 12866, and therefore it was not reviewed by the Office of Management and Budget. This rule is not considered significant under the Department's regulatory policies and procedures. The changes are being made solely for the purposes of eliminating obsolete requirements and correcting out-of-date references.

The Department also has determined that the economic impact of this rule is so minimal that further economic analysis is unnecessary. This rule does not impose unfunded mandates or requirements that will have any impact on the quality of the human environment.

Executive Order 12612

The Department has analyzed this rule under the principles and criteria contained in Executive Order 12612 (''Federalism'') and has determined that

the rule does not have sufficient federalism implications to warrant the preparation of a Federalism Assessment.

Regulatory Flexibility Act

The Department has evaluated the effects of this rule on small entities. I certify this rule will not have a significant economic impact on a substantial number of small entities, because we are merely removing obsolete provisions and are cross-referencing the Department's rulemaking procedures in another part. The substantive procedural requirements are not changed.

Paperwork Reduction Act

This rule contains no reporting or recordkeeping requirements.

List of Subjects in 14 CFR Part 399

Administrative practice and procedure, Air carriers.

For the reasons set forth above, 14 CFR part 399 is amended as follows.

PART 399—POLICIES RELATING TO RULEMAKING PROCEEDINGS

1. The authority citation for part 399 is revised to read as follows:

Authority: 5 U.S.C. 551 *et seq.*, 49 U.S.C. 40101 *et seq.*

2. Section 399, Subpart F is amended by revising §§ 399.70 and 399.73, and removing §§ 399.71, and 399.72, to read as follows:

Subpart F—Policies Relating to Rulemaking Proceedings

§ 399.70 Cross-references to the Office of the Secretary's Rulemaking Procedures.

The rules and policies relating to the disposition of rulemaking petitions by the Department of Transportation Office of the Secretary are located in its rulemaking procedures contained in 49 CFR Part 5. The criteria for identifying significant rules and determining whether a regulatory analysis will be performed are set forth in the Department's Regulatory Policies and Procedures, 44 FR 11034, February 26, 1979, and Executive Order 12866.

§§ 399.71 and 399.72 [Removed]

§ 399.73 Definition of small business for Regulatory Flexibility Act

For the purposes of the Department's implementation of chapter 6 of title 5, United States Code (Regulatory Flexibility Act), a direct air carrier or foreign air carrier is a small business if it provides air transportation only with small aircraft as defined in § 298.3 of this chapter (up to 60 seats/18,000 pound payload capacity).

Issued in Washington, D.C. on May 31, 1996, under the authority of 49 CFR part 1.

Charles A. Hunnicutt,

Assistant Secretary for Aviation and International Affairs.

[FR Doc. 96–14396 Filed 6–6–96; 8:45 am]

BILLING CODE 49107–62–P

DEPARTMENT OF TRANSPORTATION

Coast Guard

33 CFR Part 100

[CGD07–96–015]

RIN 2115–AE46

Special Local Regulations: Harborwalk Boat Race; Sampit River, Georgetown, SC

AGENCY: Coast Guard, DOT.

ACTION: Final rule.

SUMMARY: The Coast Guard is establishing permanent special local regulations for the Harborwalk Boat Race. This event will be held annually on the last Sunday of June, between 12 p.m. and 5:30 p.m. EDT (Eastern Daylight Time). Historically, there have been approximately sixty participants racing 14 to 20 foot outboard power boats on a prescribed course on a portion of the Sampit River, Georgetown, South Carolina. The nature of the event and the closure of the Sampit River creates an extra or unusual hazard in the navigable waters. These regulations are necessary to provide for the safety of life on the navigable waters during the event.

DATES: July 8, 1996.

FOR FURTHER INFORMATION CONTACT: ENS M. J. DaPonte, project officer, Coast Guard Group Charleston at (803) 724–7621.

SUPPLEMENTARY INFORMATION:

Regulatory History

On March 26, 1996, the Coast Guard published a notice of proposed rulemaking entitled ''Harborwalk Boat Race, Sampit River, Georgetown, SC'' in the Federal Register (61 FR 13119). The comment period ended May 28, 1996. The Coast Guard received no comments during the notice of proposed rulemaking comment period. A public hearing was not requested and one was not held.

Discussion of Regulations

These regulations are needed to provide for the safety of life during the Harborwalk Boat Race. The rules are intended to promote safe navigation on the waters off East Bay Park on the Sampit River during the race by controlling the traffic entering, exiting, and traveling within these waters. Historically, the anticipated concentration of spector and participant vessels associated with the Harborwalk Boat Race has posed a safety concern, which is addressed in these special local regulations.

These regulations will not permit movement of spectator vessels and other nonparticipating vessel traffic within the regulated area, bounded by a line drawn from:

33° 21.5′ N, 079° 17.10′ W, thence to
33° 21.7′ N, 079° 16.8′ W, thence along the shore to
33° 21.1′ N, 079° 16.7′ W, thence to
33° 21.1′ N, 079° 16.9′ W thence back to
33° 21.5′ N, 079° 17.10′ W

From 12 p.m. to 5:30 p.m. EDT annually during the last Sunday of June. All coordinates use datum: NAD 83. These regulations will permit the movement of spectator vessels and other nonparticipants after the termination of race, and during intervals between scheduled events at the discretion of the Coast Guard Patrol Commander.

Regulatory Evaluation

This rule is not a significant regulatory action under Section 3(f) of the Executive Order 12866 and does not require an assessment of the potential costs and benefits under Section 6(a)(3) of that Order. It has been exempted from review by the Office of Management and Budget under that order. It is not significant under the regulatory policies and procedures of the Department of Transportation (DOT) (44 FR 11040; February 26, 1979). The Coast Guard expects the economic impact of this proposed rule to be so minimal that a full Regulatory Evaluation under paragraph 10e of the regulatory policies and procedures of DOT is unnecessary. These regulations will last for only 5 and a half hours each day of the event. No public comments were received during the notice of proposed rulemaking comment period.

Small Entities

Under the Regulatory Flexibility Act (5 U.S.C. 601 *et seq.*), the Coast Guard must consider whether this action will have a significant economic impact on a substantial number of small entities. ''Small entities'' include independently owned and operated small businesses that are not dominant in their field and that otherwise qualify as ''small business concerns'' under Section 3 of the Small Business Act (15 U.S.C. 632).

For reasons set forth in the above Regulatory Evaluation, the Coast Guard certifies that this action will not have a

significant economic impact on a substantial number of small entities.

Collection of Information

These regulations contain no collection of information requirements under the Paperwork Reduction Act (44 U.S.C. 3501 *et seq.*).

Federalism

This action has been analyzed in accordance with the principles and criteria contained in Executive Order 12612, and it has been determined that the rulemaking does not have sufficient Federalism implications to warrant the preparation of a Federalism Assessment.

Environmental Assessment

The Coast Guard has considered the environmental impact of this rule consistent with Section 2.B.2. of Commandant Instruction M16475.1B. In accordance with that section, this action has been environmentally assessed (EA completed), and the Coast Guard has concluded that it will not significantly affect the quality of the human environment. An environmental assessment and a finding of no significant impact have been prepared and are available in the docket for inspection or copying.

List of Subjects in 33 CFR Part 100

Marine safety, Navigation (water), Reporting and recordkeeping requirements, Waterways.

Final Regulations

In consideration of the foregoing, Part 100 of Title 33, Code of Federal Regulations, the Coast Guard amends as follows:

1. The authority citation for Part 100 continues to read as follows:

PART 100—[AMENDED]

Authority: 33 U.S.C. 1233; 49 CFR 1.46 and 33 CFR 100.35.

2. A new section 100.713 is added to read as follows:

§ 100.713 Annual Harborwalk Boat Race; Sampit River, Georgetown, SC.

(a) *Definitions.* (1) *Regulated Area.* The regulated area is formed by a line from:

33°21.5′ N, 079°17.10′ W, thence to
33°21.7′ N, 079°16.8′ W, thence along the shore to
33°21.1′ N, 079°16.7′ W, thence to
33°21.1′ N, 079°16.9′ W, thence back to
33°21.5′ N, 079°17.10′ W.

All coordinates referenced use datum: NAD 83.

(2) *Coast Guard Patrol Commander.* The Coast Guard Patrol Commander is a commissioned, warrant, or petty officer of the United States Coast Guard who has been designated by the Commander, Coast Guard Group Charleston, Charleston, South Carolina.

(b) *Special local regulations.* (1) Entry into the regulated area is prohibited to all nonparticipants.

(2) After the termination of the Harborwalk Boat Race, and during intervals between scheduled events, at the discretion of the Coast Guard Patrol Commander all vessels may resume normal operations.

(c) *Effective Dates.* This section is in effect from 12 p.m. and terminates at 5:30 p.m. EDT annually during the last Sunday of June.

Dated: May 31, 1996.

J.W. Lockwood,

Rear Admiral, U.S. Coast Guard Commander, Seventh Coast Guard District.

[FR Doc. 96–14421 Filed 6–6–96; 8:45 am]

BILLING CODE 4910–14–M

---

33 CFR Part 165

[CGD09–96–002]

RIN 2115–AA97

Safety Zone: Lake Erie, Detroit to Cleveland

AGENCY: Coast Guard, DOT.

ACTION: Final rule.

SUMMARY: The Coast Guard is establishing a moving safety zone around the M/V AMERICAN REPUBLIC on Sunday, June 9, 1996, as it transits Lake Erie from Detroit to Cleveland. During this time, the M/V AMERICAN REPUBLIC will be transporting the 1996 Summer Olympics Torch Runner on the Detroit to Cleveland leg of the cross-country relay. This safety zone is necessary to protect the vessel and its passengers from vessels which may impede its passage.

EFFECTIVE DATES: This rule is effective at 8 a.m. on June 9, 1996, and terminates at 11 p.m. on June 9, 1996, unless terminated earlier by the Coast Guard Captain of the Port Detroit or Cleveland.

FOR FURTHER INFORMATION CONTACT: Lieutenant Commander Rhae Giacoma, Assistant Chief, Marine Port and Environmental Safety Branch, Ninth Coast Guard District, Room 2069, 1240 E. Ninth Street, Cleveland, Ohio, 44199–2060, (216) 522–3994.

SUPPLEMENTARY INFORMATION:

Background and Purpose

Prior to the opening of the 1996 Summer Olympics in Atlanta, GA, the Olympic Torch will be carried cross country by way of relay. The relay will begin in Los Angeles, CA and terminate in Atlanta, GA. Part of the relay includes an over-water leg from Detroit, MI to Cleveland, OH. For this leg, the Olympic Torch and Runner will be transported across Lake Erie onboard the Great Lakes cargo vessel M/V AMERICAN REPUBLIC. The Torch Runner will arrive in Detroit Hart Plaza on the morning of June 9, 1996, where he will board the M/V AMERICAN REPUBLIC for transit to Cleveland. The vessel is expected to arrive at Cleveland City Dock the evening of June 9, 1996.

The M/V AMERICAN REPUBLIC will be taking the following route: From Detroit, the transit will follow the shipping channel down the Detroit River, then 095 degrees true across northern Lake Erie (transiting north of Pelee Island) to Pelee Passage Light, through Pelee Passage, then 111 degrees true to Cleveland.

A 200-yard moving safety zone will be in place around the M/V AMERICAN REPUBLIC during its entire voyage from Detroit to Cleveland. The U.S. Coast Guard Cutter BRISTOL BAY will escort the M/V AMERICAN REPUBLIC throughout the voyage. Other Coast Guard vessels (including Coast Guard Auxiliary) will join in escorting the M/V AMERICAN REPUBLIC at various locations where vessel congestion is expected to be heavy.

The safety zone is being established for the protection of the M/V AMERICAN REPUBLIC and all personnel onboard, as well as for the protection of vessels and personnel operating in the vicinity of the vessel during it voyage. The M/V AMERICAN REPUBLIC is a 634 foot vessel. Because of its size, it is restricted in its ability to maneuver. Since the transit from Detroit to Cleveland will be taking place on a Sunday, media and public interest is expected to be high. Boating traffic on Lake Erie is anticipated to be heavy, particularly in the areas close to the ports of Detroit and Cleveland. The safety zone is essential to ensure vessels and personnel do not interfere with the safe transit of the vessel throughout its voyage and to protect the safety of spectator craft. However, the Captain of the Port may reduce the size of the safety zone within the outer limits prescribed in the regulation whenever it appears to the Captain of the Port that this may be done so with due regard for safety.

This regulation is issued pursuant to 33 U.S.C. 1225 and 1231, as set out in the authority section for all of Part 165.

Notice and Comment

A notice of proposed rulemaking was published on April 18, 1996 (61 FR

16886), inviting comments on this rulemaking. The deadline for comments passed on May 20, 1996, with no objections or other comments received. In accordance with 5 U.S.C. 553, good cause exists for making the rule effective less than 30 days after Federal Register publication. Delay in the effective date would be contrary to the public interest because immediate action is necessary to prevent possible loss of life, injury, or damage to property or the environment at the time of the scheduled event.

Environment

The Coast Guard has considered the environmental impact of this regulation and concluded that, under section 2.B.2.c of the Coast Guard Commandant Instruction M16475.1B, it is categorically excluded from further environmental documentation, and has so certified in the docket file.

Federalism

This action has been analyzed in accordance with the principles and criteria contained in Executive Order 12612, and it has been determined that this regulation does not have sufficient federalism implications to warrant the preparation of a Federalism Assessment.

Regulatory Evaluation

This regulation is considered to be nonsignificant under Executive Order 12866 on Regulatory Planning and Review and nonsignificant under Department of Transportation regulatory policies and procedures (44 FR 11034 of February 26, 1979).

Small Entities

The economic impact of this regulation is expected to be so minimal that a full regulatory evaluation is unnecessary. Since the impact of this regulation is expected to be minimal, the Coast Guard certifies that, it will not have a significant economic impact on a substantial number of small entities.

Collection of Information

This regulation will impose no collection of information requirements under the Paperwork Reduction Act, 44 U.S.C. 3501 et seq.

List of Subjects in 33 CFR Part 165

Harbors, Marine safety, Navigation (water), Security measures, Vessels, Waterways.

Regulations: In consideration of the foregoing, the Coast Guard amends Subpart C of Part 165 of title 33, Code of Federal Regulations as follows:

1. The authority citation for Part 165 continues to read as follows:

Authority: 33 U.S.C. 1231; 50 U.S.C. 191; 33 CFR 1.05–1(g), 6.04–6, and 160.5; and 49 CFR 1.46.

2. A new temporary regulation is added to read as follows:

§ 165.T09–002 Safety Zone: Lake Erie, From Detroit, MI to Cleveland, OH.

(a) Location. The following area is a moving safety zone: Within 200 yards of the M/V AMERICAN REPUBLIC as it transits Lake Erie from Detroit, MI to Cleveland, OH.

(b) Effective Date. This section is effective at 8 a.m. on June 9, 1996, and terminates at 11 p.m. on June 9, 1996, unless terminated earlier by the Coast Guard Captain of the Port Detroit or Cleveland.

(c) Regulations. In accordance with the general regulations in § 165.23 of this part, entry into this zone is prohibited unless authorized by the Captain of the Port.

Dated: 29 May 1996.

Paul J. Pluta,

Captain, U.S. Coast Guard, Commander, Ninth Coast Guard District, Acting.

[FR Doc. 96–14423 Filed 6–6–96; 8:45 am]

BILLING CODE 4910–14–M

---

33 CFR Part 165

[COTP Huntington 96–008]

RIN 2115–AA97

Safety Zone; Ohio River, miles 309.0 to 312.5; Vicinity of the Huntington West End Bridge, Huntington, WV

AGENCY: Coast Guard, DOT.

ACTION: Temporary final rule.

SUMMARY: The Coast Guard has established an emergency safety zone on the Ohio River, miles 309.0 to 312.5, in the vicinity of the Huntington West End Bridge, Huntington, WV. This regulation is needed to control vessel traffic in the regulated area to prevent potential safety hazards for transiting vessels and the general public resulting from a sunken hopper barge located approximately 300 feet downstream from the West End Bridge and subsequent salvage operations. The barge extends from the center line of the channel towards the left descending bank and is at a depth of 9 feet at normal pool of 24.7 feet on the Huntington gauge. The barge is marked with two lighted buoys and attended during periods of darkness and inclement weather by the M/V BUNKER BEAVER, monitoring marine radio channels 13 and 16. This regulations prohibits navigation in the regulated area during periods of periodic navigation in the regulated area during periods of periodic closure without the express permission of the Captain of the Port for the safety of vessel traffic and the protection of life and property along the river. Periods of closure will be announced via normally scheduled Coast Guard Broadcast Notice to Mariners or by Coast Guard personnel onscene.

EFFECTIVE DATES: This regulation is effective 7 p.m. EST on May 24, 1996. It terminates on June 12, 1996 at 7 a.m. EST, unless terminated sooner by the Captain of the Port Huntington, WV.

FOR FURTHER INFORMATION CONTACT: LTJG Todd A. Childers, Assistant Chief of the Port Operations Department, Captain of the Port, Huntington, West Virginia at (304) 529–5524.

SUPPLEMENTARY INFORMATION:

Regulatory History

In accordance with 5 U.S.C. 553, a notice of proposed rulemaking was not published for this regulation and good cause exists for making it effective in less than 30 days after Federal Register publication. Following normal rulemaking procedures will be impracticable. Specifically, a sunken barge at mile 310.8, Ohio River, has created a situation which presents an immediate hazard to navigation, life, and property. The Coast Guard deems it to be in the public's best interest to issue a regulation immediately.

Background and Purpose

The activities requiring this regulation are the hazards posed by the sunken hopper barge and salvage operations that will be conducted for the recovery of the sunken barge at mile 310.8, Ohio River. The barge sank after taking on water following an allision with the Huntington West End Bridge while being pushed by the M/V E.W. THOMPSON on May 14, 1996. Due to river conditions salvage operations will not begin until on or about May 29, 1996. During salvage operations, the designated area will be subject to periodic closure and to traffic restrictions as deemed necessary by on scene Coast Guard representatives. This regulation is also required by falling water conditions on the Ohio River which are resulting in reduced water clearance over the sunken barge, making passage over the barge by transiting vessels extremely hazardous. The Captain of the Port, Huntington, WV will monitor the water conditions and the salvage operations once initiated. In order to provide for the safety of vessel traffic, the Captain of the Port Huntington intends to regulate vessel

traffic in that portion of the Ohio River from miles 309.0 to 312.5 for all vessels except those engaged in salvage or surveying operations until this hazard is mitigated. Transit of the area will be on a case-by-case basis and only upon specific approval and direction of the Captain of the Port Huntington during periods of river closure. The Ohio side of the center channel is restricted in width, and the West Virginia alternate channel has been opened to provide safe navigational waters. Representatives of the Captain of the Port Huntington can be reached via marine radio on channels 13 or 16. Salvage operators can be reached by contacting the M/V ARKANSAS TRAVELER on marine radio channels 13 or 16. The M/V BUNKER BEAVER will be stationed on scene from 7 p.m. to 7 a.m. EST to render assistance as needed to transiting vessels. The M/V BUNKER BEAVER will be monitoring marine radio channels 13 and 16. Regularly scheduled Broadcast Notice to Mariners will be issued to keep vessel operators appraised of the status of the safety zone.

Regulatory Evaluation

This regulation is not a significant regulatory action under section 3(f) of Executive Order 12866 and does not require an assessment of potential costs and benefits under section 6(a)(3) of that order. It has been exempted from review by the Office of Management and Budget under that order. It is not under the regulatory policies and procedures of the Department of Transportation (DOT) (44 FR 11040; February 26, 1979). The Coast Guard expects the economic impact of this regulation to be such that a full Regulatory Evaluation under paragraph 10e of the regulatory policies and procedures of DOT is unnecessary, due to the duration of the actual river closure.

Small Entities

The Coast Guard finds that the impact on small entities, if any, is not substantial. Therefore, the Coast Guard certifies under section 605(b) of the Regulatory Flexibility Act (5 U.S.C. 601 *et seq.*) that this temporary rule will not have a significant economic impact on a substantial number of small entities.

Collection of Information

This rule contains no collection of information requirements under the Paperwork Reduction Act (44 U.S.C. 3501 *et seq.*).

Federalism Assessment

The Coast Guard has analyzed this regulation under the principles and criteria contained in Executive Order 12612 and has determined that it does not raise sufficient federalism implications to warrant the preparation of a Federalism Assessment.

Environmental Assessment

The Coast Guard considered the environmental impact of this regulation and concluded that, under section 2.B.2 of Commandant Instruction M16475.1B, (as revised by 59 FR 38654; July 29, 1994) this regulation is categorically excluded from further environmental documentation.

List of Subjects in 33 CFR Part 165

Harbors, Marine safety, Navigation (water), Records and recordkeeping requirements, Security measures, Waterways.

Temporary Regulation

In consideration of the foregoing, Subpart F of Part 165 of Title 33, Code of Federal Regulations, is amended as follows:

PART 165—[AMENDED]

1. The authority citation for Part 165 continues to read as follows:

Authority: 33 U.S.C. 1231; 50 U.S.C. 191; 33 CFR 1.05–1(g), 6.04–1, 6.04–6, and 160.5; 49 CFR 1.46.

2. A temporary section 165.T02–008 is added, to read as follows:

§ 165.T02–008 Safety Zone: Ohio River

(a) *Location.* The Ohio River between miles 309.0 and 312.5 is established as a safety zone.

(b) *Effective Dates.* This section is effective from 7 p.m. e.s.t. on May 24, 1996. It terminates on June 12, 1996 at 7 a.m. e.s.t. unless terminated sooner by the Captain of the Port Huntington, WV.

(c) *Regulations.*

(1) Periods of river closure will be announced by Broadcast Notice to Mariners, and/or by Coast Guard representatives on-scene via channel 13 and 16.

(2) Under the general regulations of section 165.23 of this part, entry of vessels into this zone during periods of closure is prohibited unless authorized by the Captain of the Port.

(3) All vessels must:

(i) Communicate with on-scene by personnel from the Coast Guard Marine Safety Office, Huntington, WV, and/or the contract vessel M/V ARKANSAS TRAVELER on channel 13 or 16 VHF–FM to arrange for safe passage through the safety zone during all periods of closure.

(ii) Communicate with the contract vessel M/V BUNKER BEAVER on channel 13 or 16 VHF–FM to arrange for safe passage through the safety zone at all other times between the hours of 7 p.m. and 7 a.m. e.s.t. or during periods of inclement weather.

(4) Vessels engaged in conducting or supporting salvage operations may continue to operate as necessary.

Dated: May 24, 1996, 5 p.m. e.s.t.

G.H. Burns, III,

Lieutenant Commander, U.S. Coast Guard, Captain of the Port, Acting, Huntington, WV.

[FR Doc. 96–14425 Filed 6–6–96; 8:45 am]

BILLING CODE 4910–14–M

---

33 CFR Part 165

[COTP Miami 96–039]

RIN 2115–AA97

Security Zone Regulations: U.S. Coast Guard Base Miami Beach; Miami Beach, FL

AGENCY: Coast Guard, DOT.

ACTION: Final rule.

SUMMARY: These regulations are initiated to remove 33 CFR § 165.T0706. This security zone regulation was established to protect U.S. Coast Guard Base Miami Beach and vessels moored thereto from potential subversive acts by any unknown person(s) hostile to the United States. The potential threat stemmed from the United States' support of the United Nations Resolutions calling for the removal of Iraqi military forces from Kuwait. The Iraqi military forces have been removed from Kuwait and the danger of subversive acts is no longer present. Therefore, the Coast Guard is removing 33 CFR § 165.T0706.

EFFECTIVE DATE: June 7, 1996.

FOR FURTHER INFORMATION CONTACT: BMC J.L. Belk, project officer, Port Management and Response Department, USCG Marine Safety Office at (305) 536–5693.

SUPPLEMENTARY INFORMATION: The Coast Guard finds in accordance with 5 U.S.C. 553, good cause exists for proceeding directly to a final rule and making this rule effective in less than 30 days. This final rule removes a temporary security zone put in place during the Gulf War 1991. The potential threat to U.S. Coast Guard Base Miami Beach has not existed since 1991 and the end of hostilities with Iraq. Therefore, publishing an NPRM or delaying the effective date of this final rule is unnecessary and the Coast Guard is proceeding directly to final rule, effective on publication in the Federal Register.

Discussion of Regulations

The security zone regulations for Coast Guard Base Miami Beach were published as an emergency rule in the Federal Register on February 13, 1991 [56 FR 5754]. These security zone regulations were established due to the potential threat stemming from the United States' support of United Nations Resolutions calling for the removal of Iraqi military forces from Kuwait. This increased the possibility of acts of terrorism or sabotage by unknown person(s) against United States Coast Guard Base Miami Beach facilities. In 1991, the United States and other United Nations member forces freed Kuwait and the region was restored to order. This action decreased the possibility of acts of terrorism or sabotage against United States Coast Guard Base Miami Beach facilities. Therefore, this security zone regulation is no longer necessary, and the Coast Guard is removing the rule at 33 CFR § 165.T0706.

Regulatory Evaluation

This rule is not a significant regulatory action under section 3(f) of Executive Order 12866 and does not require an assessment of potential costs and benefits under section 6(a)(3) of that order. It has not been reviewed by the Office of Management and Budget under that order. It is not significant under the regulatory policies and procedures of the Department of Transportation (DOT) (44 FR 11040; February 26, 1979). The Coast Guard expects the economic impact of this rule to be so minimal that a full Regulatory Evaluation under paragraph 10e of the regulatory policies and procedures of DOT is unnecessary. This rule will remove a current security zone and thereby lessen any economic burden.

Small Entities

Under the Regulatory Flexibility Act (5 U.S.C. 601 et seq.), the Coast Guard must consider the economic impact on small entities of a rule for which a general notice of proposed rulemaking is required. ''Small entities'' may include (1) small business and not-for-profit organizations that are independently owned and operated and not dominant in their fields and (2) governmental jurisdictions with populations of less than 50,000.

For the reasons set forth above, the Coast Guard certifies this action will not have a significant economic impact on small entities.

Collection of Information

This rule contains no collection-of-information requirements under the Paperwork Reduction Act (44 U.S.C. 3501 *et. seq.).*

Federalism

This action has been analyzed in accordance with the principles and criteria contained in Executive Order 12612, and it has been determined that the rulemaking does not have sufficient federalism implications to warrant the preparation of a Federalism Assessment.

Environment

The Coast Guard has considered the environmental impact of this rule and has determined pursuant to section 2.B.2. of Commandant Instruction M16475.1B (as revised by 59 FR 38654, July 29, 1994) that this rule is categorically excluded from further environmental documentation. A categorical exclusion checklist and categorical exclusion determination have been completed and are available for inspection and copying.

List of Subjects in 33 CFR Part 165

Harbors, Marine safety, Navigation (water), Reports and recordkeeping requirements, Security measures, Waterways.

In consideration of the foregoing, the Coast Guard amends, Subpart D of Part 165 Title 33, Code of Federal Regulations as follows:

PART 165—[AMENDED]

1. The authority citation of Part 165 continues to read as follows:

Authority: 33 U.S.C. 1231; 50 U.S.C. 191; 33 CFR 1.05–1(g), 6.04–1, 6.04–6 and 160.5; 49 CFR 1.46.

§ 165.T0706 [Removed]

2. Section 165.T0706 is removed.

Dated: May 28, 1996.

D. F. Miller,

Captain, U.S. Coast Guard, Captain of the Port Miami.

[FR Doc. 96–14424 Filed 6–5–96; 8:45 am]

BILLING CODE 4910–14–M

DEPARTMENT OF VETERANS AFFAIRS

38 CFR Part 1

RIN 2900–AI23

Information Law; Miscellaneous

AGENCY: Department of Veterans Affairs.

ACTION: Final rule.

SUMMARY: This document amends Department of Veterans Affairs (VA) regulations concerning information law by eliminating provisions that essentially restate statutory language from the Freedom of Information Act and the Privacy Act.

EFFECTIVE DATE: June 7, 1996.

FOR FURTHER INFORMATION CONTACT: Lorrie Johnson, Jeff Corzatt, Staff Attorneys, Office of General Counsel, Department of Veterans Affairs, 810 Vermont Avenue, NW, Washington, DC 20420, (202) 273–6380.

SUPPLEMENTARY INFORMATION: This final rule consists of nonsubstantive changes and, therefore, is not subject to the notice comment and effective date provisions of 5 U.S.C. 553.

The Secretary hereby certifies that this final rule will not have a significant economic impact on a substantial number of small entities as they are defined in the Regulatory Flexibility Act, 5 U.S.C. 601–612. This final rule merely consists of nonsubstantive changes.

There is no Catalog of Federal Domestic Assistance Number for the programs affected by this regulation.

List of Subjects in 38 CFR Part 1

Administrative practice and procedures, Archives and records, Cemeteries, Claims, Courts, Flags, Freedom of information, Government contracts, Government employees, Government property, Infants and children, Inventions and patents, Investigations, Parking, Penalties, Postal Service, Privacy, Reporting and recordkeeping requirements, Seals and insignia, Security measures, Wages.

Approved: May 30, 1996.

Jesse Brown,

Secretary of Veterans Affairs.

For the reasons set forth in the preamble, 38 CFR part 1 is amended as follows:

PART 1—GENERAL PROVISIONS

1. The authority citation for part 1 continues to read as follows:

Authority: 38 U.S.C. 501(a), unless otherwise noted.

§§ 1.558, 1.559, 1.578, 1.581, 1.583, 1.584, [Removed]

2. Sections 1.558, 1.559, 1.578, 1.581, 1.583, and 1.584 are removed.

[FR Doc. 96–14205 Filed 6–6–96; 8:45 am]

BILLING CODE 8320–01–P

---

38 CFR Part 1

RIN 2900–AI25

Investigation Regulations

AGENCY: Department of Veterans Affairs.

ACTION: Final rule.

SUMMARY: This document amends Department of Veterans Affairs (VA) regulations by removing the investigation provisions set forth at 38 CFR 1.450 through 1.455. These provisions are obsolete. The investigation authorities under the Inspector General Act of 1978, as amended (5 U.S.C. Appendix 3), have superseded these provisions.

EFFECTIVE DATE: June 7, 1996.

FOR FURTHER INFORMATION CONTACT: Joseph Vallowe, Office of Inspector General (50C), Department of Veterans Affairs, 810 Vermont Avenue, NW, Washington, DC 20420, (202) 565–8623.

SUPPLEMENTARY INFORMATION: This final rule consists of nonsubstantive changes and, therefore, is not subject to the notice comment and effective date provisions of 5 U.S.C. 553.

The Secretary hereby certifies that this final rule will not have a significant economic impact on a substantial number of small entities as they are defined in the Regulatory Flexibility Act, 5 U.S.C. 601–612. This final rule merely consists of nonsubstantive changes.

There is no Catalog of Federal Domestic Assistance Number for the programs affected by this regulation.

List of Subjects in 38 CFR Part 1

Administrative practice and procedures, Archives and records, Cemeteries, Claims, Courts, Flags, Freedom of information, Government contracts, Government employees, Government property, Infants and children, Inventions and patents, Investigations, Parking, Penalties, Postal Service, Privacy, Reporting and recordkeeping requirements, Seals and insignia, Security measures, Wages.

Approved: May 30, 1996.

Jesse Brown,

Secretary of Veterans Affairs.

For the reasons set forth in the preamble, 38 CFR part 1 is amended as follows:

PART 1—GENERAL PROVISIONS

1. The authority citation for part 1 continues to read as follows:

Authority: 38 U.S.C. 501(a), unless otherwise noted.

§§ 1.450 through 1.455 [Removed]

2. Sections 1.450 through 1.455 and the undesignated heading ''Investigation'' are removed.

[FR Doc. 96–14204 Filed 6–6–96; 8:45 am]

BILLING CODE 8320–01–P

38 CFR Part 6

RIN 2900–AH52

United States Government Life Insurance

AGENCY: Department of Veterans Affairs.

ACTION: Final rule.

SUMMARY: This document amends the Department of Veterans Affairs (VA) regulations relating to United States Government Life Insurance (USGLI). It deletes provisions that have become obsolete. It also deletes provisions contained in insurance policies that consist of material not required to be published in the Federal Register. Additionally, it deletes restatements of statute and makes changes for purposes of clarity.

EFFECTIVE DATE: June 7, 1996.

FOR FURTHER INFORMATION CONTACT: George Poole, Chief, Insurance Program Administration, Department of Veterans Affairs Regional Office and Insurance Center, PO Box 8079, Philadelphia, PA 19101, (215) 951–5718.

SUPPLEMENTARY INFORMATION: With the enactment of the National Service Life Insurance Act of 1940, as amended, issuance of USGLI policies ceased in April, 1951. Additionally, all USGLI policies were declared paid-up effective January 1, 1983. Furthermore, all USGLI term policies were converted to Ordinary Life policies in May, 1993. Consequently, regulations pertaining to issuance, premium payments (other than being declared paid-up), reinstatements of lapsed policies, or term policies are obsolete and are eliminated accordingly. It also deletes provisions contained in insurance policies that consist of material not required to be published in the Federal Register. Additionally, it deletes restatements of statute and makes changes for purposes of clarity.

This final rule consists of nonsubstantive changes and, therefore, is not subject to the notice-and-comment and effective-date provisions of 5 U.S.C. 553.

The Secretary of Veterans Affairs hereby certifies that this final rule will not have a significant economic impact on a substantial number of small entities as they are defined in the Regulatory Flexibility Act, 5 U.S.C. 601–612. This final rule will not affect any entity since it does not contain any substantive provisions. Therefore, pursuant to 5 U.S.C. 605(b), this amendment is exempt from the initial and final regulatory flexibility analysis requirements of sections 603 and 604.

The Catalog of Federal Domestic Assistance Program number for these regulations is 64.103.

List of Subjects in 38 CFR Part 6

Life insurance, Military personnel, Veterans.

Approved: May 31, 1996.

Jesse Brown,

Secretary of Veterans Affairs.

For the reasons set forth in the preamble, 38 CFR part 6 is amended as set forth below:

PART 6—UNITED STATES GOVERNMENT LIFE INSURANCE

1. The authority citation for part 6 is revised to read as follows:

Authority: 38 U.S.C. 501, 1940–1963, 1981–1988, unless otherwise noted.

2. The undesignated center headings preceding §§ 6.2, 6.3, 6.7, 6.31, 6.46, 6.47, 6.78, 6.90, 6.106, 6.111, 6.150, 6.153, 6.155, 6.159, 6.170, 6.186 and 6.202 are removed.

§§ 6.2 through 6.7, 6.16 through 6.40, 6.46 through 6.53, 6.56, 6.57, 6.63, 6.67, 6.69 through 6.92, 6.101 through 6.111, 6.116, 6.120 through 6.121, 6.123 through 6.123c, 6.125, 6.126, 6.128 through 6.186, 6.192 through 6.210 [Removed]

3. In part 6, the following sections are removed:

a. Sections 6.2 through 6.7;
b. Sections 6.16 through 6.40;
c. Sections 6.46 through 6.53;
d. Section 6.56;
e. Section 6.57;
f. Section 6.63;
g. Section 6.67;
h. Sections 6.69 through 6.92;
i. Sections 6.101 through 6.111;
j. Section 6.116;
k. Sections 6.120 through 6.121;
l. Sections 6.123 through 6.123c;
m. Section 6.125;
n. Section 6.126;
o. Sections 6.128 through 6.186; and
p. Sections 6.192 through 6.210.

§§ 6.12, 6.13, 6.45, 6.55, 6.58, 6.60, 6.62, 6.64, 6.65, 6.68, 6.95, 6.96, 6.100, 6.115, 6.117, 6.117a, 6.119, 6.122, 6.127, 6.191, 6.211 [Redesignated as §§ 6.1 through 6.21]

4. Part 6 is amended by redesignating the following sections as set forth below:

Old section	New section
6.12	6.1
6.13	6.2
6.45	6.3
6.55	6.4
6.58	6.5
6.60	6.6
6.62	6.7
6.64	6.8

Old section	New section
6.65	6.9
6.68	6.10
6.95	6.11
6.96	6.12
6.100	6.13
6.115	6.14
6.117	6.15
6.117a	6.16
6.119	6.17
6.122	6.18
6.127	6.19
6.191	6.20
6.211	6.21

§ 6.2 [Amended]

5. In newly redesignated § 6.2, the first sentence is removed.

§ 6.3 [Amended]

6. In newly redesignated § 6.3, paragraph (a) is removed and the paragraph designation (b) is removed.

§ 6.4 [Amended]

7. Newly redesignated § 6.4 is amended by removing ''§§ 3.1(j), 3.204, 3.205 (a) and (b) and 3.209 of '' and adding, in its place, ''38 U.S.C. 103(c) and Part 3''.

§ 6.7 [Amended]

8. In newly redesignated § 6.7, paragraphs (a), (b) and (c) are removed; and paragraph (d) is redesignated as paragraph (a); newly redesignated § 6.7 is further amended by revising the section heading and by adding a new paragraph (b) to read as follows:

§ 6.7 Claims of creditors, taxation.

* * * * *

(b) The provisions of 38 U.S.C. 5301(b) which entitle the United States to collect by setoff out of benefits payable to any beneficiary under a United States Government life insurance policy do not apply to dividends being held to the credit of the insured for the payment of premiums under the provisions of section 1946 of title 38 U.S.C.

* * * * *

9. Newly redesignated § 6.8 is revised to read as follows:

§ 6.8 Selection, revocation and election.

The insured under a United States Government Life Insurance policy may, upon written notice, select an optional settlement. Such optional settlement may be revoked by written notice. If the insured does not select one of the optional settlements, as set out under the provisions of the policy, the insurance shall be payable in 240 monthly installments unless the beneficiary elects in writing a different option.

§ 6.9 [Amended]

10. In newly redesignated § 6.9, the first sentence of the introductory text is removed.

11. Newly redesignated § 6.10 is revised to read as follows:

§ 6.10 Options.

Insurance will be payable in one sum only when selected by the insured during his or her lifetime or by his or her last will and testament.

12. In newly redesignated § 6.11, paragraph (d) and the first sentence of paragraph (a) are removed; paragraphs (e) and (f) are redesignated as paragraphs (d) and (e), respectively. Newly redesignated paragraph (d) is amended by removing ''as provided in paragraph (f) of this section'', and by removing ''in § 6.62'' and adding, in its place, ''in § 6.7''. Newly redesignated § 6.11 is further amended by revising the section heading, paragraph (b) and newly redesignated paragraph (e) to read as follows:

§ 6.11 How dividends are paid.

* * * * *

(b) If the insured has a National Service Life Insurance policy or policies in force, dividends used to pay premiums in advance will be held to the credit of the insured, unless otherwise directed by the insured.

* * * * *

(e) Dividend credit of the insured held for payment of premiums or dividends left to accumulate on deposit may be applied to the payment of premiums in advance on any National Service Life Insurance policy upon written request of the insured made before default in payment of premium. Upon maturity of the policy, any unpaid dividend will be paid to the person(s) currently entitled to receive payments under the policy.

13. In newly redesignated § 6.13, the section heading is revised to read as follows:

§ 6.13 Policy loans.

* * * * *

§ 614 [Amended]

14. In newly redesignated § 6.14, the seventh and eight sentences are removed; the section heading is amended by removing ''5-year level premium term policy and''; the first sentence is amended by removing ''the 5-year level premium term or''; the second sentence is amended by removing ''at the end of the first policy year and at the end of any policy year thereafter'', and the fourth sentence is amended by removing ''provided the policy has been in force for at least 1 year''.

15. Newly redesignated § 6.16 is revised to read as follows:

§ 6.16 Payment of cash value in monthly installments.

Effective January 1, 1971, in lieu of payment of cash value in one sum, the insured may elect to receive payment in monthly installments under option 2 as set forth in the insurance contract or as a refund life income option. If the insured dies before the agreed number of monthly installments have been paid, the remaining unpaid monthly installments will be payable to the designated beneficiary in one sum, unless the insured or such beneficiary has elected to continue the installments under the option selected by the insured. If no designated beneficiary survives, the present value of any remaining unpaid installments shall be paid to the estate of the insured, provided such payment would not escheat.

16. Newly redesignated § 6.18 is revised to read as follows:

§ 6.18 Other disabilities deemed to be total and permanent.

(a) In addition to the conditions specified in 38 U.S.C. 1958, the following also will be deemed to be total and permanent disabilities: Organic loss of speech; permanently helpless or permanently bedridden.

(b) Organic loss of speech will mean the loss of the ability to express oneself, both by voice and whisper, through the normal organs of speech if such loss is caused by organic changes in such organs. Where such loss exists, the fact that some speech can be produced through the use of an artificial appliance or other organs of the body will be disregarded.

§ 6.19 [Amended]

17. Newly redesignated § 6.19 is amended by removing ''§§ 3.204, 3.211 and 3.212'' and adding, in its place, ''Part 3''.

[FR Doc. 96–14368 Filed 6–6–96; 8:45 am]

BILLING CODE 8320–01–P

---

38 CFR Part 7

RIN 2900–AH53

Soldiers' and Sailors' Civil Relief

AGENCY: Department of Veterans Affairs.

ACTION: Final rule.

SUMMARY: This document amends the Department of Veterans Affairs (VA) regulations captioned ''Soldiers' and Sailors' Civil Relief'' which were established under the Soldiers' and

Sailors' Civil Relief Act of 1940, as amended (50 U.S.C. app. 511 *et seq.*). It deletes provisions that became obsolete because they were superseded by subsequent amendments to that Act. It also eliminates regulations that merely restate provisions of the Act and amendments thereto. Other provisions are rewritten for purpose of clarification.

EFFECTIVE DATE: June 7, 1996.

FOR FURTHER INFORMATION CONTACT: George Poole, Chief, Insurance Program Administration, Department of Veterans Affairs Regional Office and Insurance Center, P.O. Box 8079, Philadelphia, Pennsylvania 19101, (215) 951–5718.

SUPPLEMENTARY INFORMATION: This final rule consists of nonsubstantive changes and, therefore, is not subject to the notice-and-comment and effective-date provisions of 5 U.S.C. 553.

The Secretary of Veterans Affairs hereby certifies that this final rule will not have a significant economic impact on a substantial number of small entities as they are defined in the Regulatory Flexibility Act, 5 U.S.C. 601–612. This final rule will not affect any entity since it does not contain any substantive provisions. Therefore, pursuant to 5 U.S.C. 605(b), this amendment is exempt from the initial and final regulatory flexibility analysis requirements of sections 603 and 604.

The Catalog of Federal Domestic Assistance Program number for these regulations is 64.103.

List of Subjects in 38 CFR Part 7

Life insurance, Military personnel.

Approved: May 31, 1996.

Jesse Brown,

Secretary of Veterans Affairs.

For the reasons set out in the preamble, 38 CFR part 7 is amended as set forth below:

PART 7—SOLDIERS' AND SAILORS' CIVIL RELIEF

1. The authority citation for part 7 is revised to read as follows:

Authority: 50 U.S.C. app. 511, 540–547, unless otherwise noted.

§§ 7.2 through 7.16, 7.23 through 7.25, 7.28, 7.30 through 7.32 and 7.34 [Removed]

2. Sections 7.2 through 7.16, 7.23 through 7.25, 7.28, 7.30 through 7.32, and 7.34 are removed.

§§ 7.20 through 7.22, 7.26, 7.27, 7.29 and 7.33 [Redesignated as 7.2—7.8]

3. Sections 7.20 through 7.22, 7.26, 7.27, 7.29, and 7.33 are redesignated as §§ 7.2 through 7.8, respectively.

4. Newly redesignated § 7.2 is revised to read as follows:

§ 7.2 Certification of military service.

(a) A statement over the signature of the Commanding Officer or a commissioned officer of equal or higher rank than the insured, on the insured's application, may be accepted as a certification that the insured is a person in the military service.

(b) If the insured is unavailable because of service, the application may be certified by the person who has custody of the insured's service record.

(c) If an application is submitted by a person designated by the insured or by the insured's beneficiary, the Department of Veterans Affairs will obtain from the service department evidence that the insured is a person in the military service.

(Authority 50 U.S.C. app. 547)

§ 7.3 [Amended]

5. In newly redesignated § 7.3, the introductory text and paragraph (b) are removed; paragraphs (c) and (d) are redesignated as paragraphs (b) and (c), respectively; and newly redesignated paragraph (c) is amended by removing ''and if a policy provides for installment payments as a death benefit they will be calculated in accordance with the terms of the policy on the hypothesis of the death of the insured on the due date of the first premium to be guaranteed by the Government:'' and adding, in its place, '';'' immediately after the word ''benefit.''

6. In newly redesignated § 7.4, paragraph (a) is amended by removing ''percentum'' and adding, in its place, ''percent''; paragraph (c) is removed; this section is further amended by revising the introductory text and paragraph (b) to read as follows:

§ 7.4 The premium.

The term premium as defined under 50 U.S.C. app. 540(b) shall include membership dues and assessments in an association.

* * * * *

(b) Premiums will not be guaranteed for benefits additional to the primary death benefit if, when combined with the amount of the primary death benefit, the total benefit would result in a payment in excess of $10,000 or if liability for such benefits is excluded or restricted by military service or any activity which the insured may be called upon to perform in connection with military service. In the event that premiums for the primary and additional benefits are not separable under the terms of the policy the entire policy will be guaranteed, if the policy is otherwise eligible for protection under the law.

7. In newly redesigned § 7.5 paragraphs (b) and (d) are removed; paragraph (c) is redesignated as paragraph (b); newly redesignated paragraph (b) is amended by removing ''at Washington DC, on the form prescribed for that purpose, VA–Form 9–381 (as revised)'' and adding, in its place, ''Regional Office and Insurance Center at Philadelphia, Pennsylvania''; and paragraph (a) is revised to read as follows:

§ 7.5 Application.

(a) The benefits of the Act are not available except upon application. The insured may designate any person, firm, or corporation to submit an application on his or her behalf. The designation must be in writing, signed by the insured and attached to the application.

* * * * *

§ 7.6 [Amended]

8. In newly redesignated § 7.6, the first sentence of the introductory text is amended by removing '', but this guarantee will not extend for more than two years after the date when the act ceases to be in force''.

9. In newly redesignated § 7.7, paragraphs (a), (c) and (e) are removed; paragraphs (b) and (d) are redesignated as paragraphs (a) and (b), respectively; newly redesignated paragraph (a) is amended by removing ''(section 405, Soldiers'' and Sailors' Civil Relief Act Amendments of 1942),'' and adding, in its place,'' (SSCRA, as amended)''; and newly redesignated paragraph (b) is revised to read as follows:

§ 7.7 Maturity.

* * * * *

(b) Upon the expiration of the period of protection, the insurer will submit to the Department of Veterans Affairs a complete statement of the account on each policy, which will show the amount of indebtedness by reason of the premiums with interest and the credits, if any, then available and will be subject to audit and approval by the Department of Veterans Affairs. The statement of account will include the rate of interest charged on all indebtedness, the date of debit and credit entries, and such other information as may be deemed necessary in making an audit of the account.

10. Newly redesignated § 7.8 is revised to read as follows:

§ 7.8 Beneficiary or assignee.

The consent of a beneficiary, assignee, or any other person who may have a right or interest in the proceeds of the

policy is not a prerequisite for placing a policy under the protection of the Act.

[FR Doc. 96–14367 Filed 6–6–96; 8:45 am]

BILLING CODE 8320–01–P

38 CFR Part 8a

RIN 2900–AH54

Veterans Mortgage Life Insurance

AGENCY: Department of Veterans Affairs.

ACTION: Final rule.

SUMMARY: This document amends the Department of Veterans Affairs (VA) regulations relating to Veterans Mortgage Life Insurance (VMLI) by eliminating regulations that merely restate statutory provisions; and by deleting provisions that have no legal effect.

EFFECTIVE DATE: June 7, 1996.

FOR FURTHER INFORMATION CONTACT: George Poole, Chief, Insurance Program Administration, Department of Veterans Affairs Regional Office and Insurance Center, PO Box 8079, Philadelphia, PA 19101, (215) 951–5718.

SUPPLEMENTARY INFORMATION: The Insurance Service of the Veterans Benefits Administration has determined that various regulations relating to VMLI are merely restatements of statutory provisions. Since they are redundant, they are unnecessary and may be eliminated.

This final rule consists of nonsubstantive changes and, therefore, is not subject to the notice-and-comment and effective-date provisions of 5 U.S.C. 553. The Secretary of Veterans Affairs hereby certifies that this final rule will not have a significant economic impact on a substantial number of small entities as they are defined in the Regulatory Flexibility Act, 5 U.S.C. 601–612. This final rule will not affect any entity since it does not contain any substantive provisions. Therefore, pursuant to 5 U.S.C. 605(b), this amendment is exempt from the initial and final regulatory flexibility analysis requirements of sections 603 and 604.

The Catalog of Federal Domestic Assistance Program number for these regulations is 64.103.

List of Subject in 38 CFR Part 8a

Mortgage insurance, Veterans.

Approved: May 31, 1996.

Jesse Brown,

Secretary of Veterans Affairs.

For the reasons set out in the preamble, 38 CFR part 8a is amended as set forth below:

PART 8a—VETERANS MORTGAGE LIFE INSURANCE

1. The authority citation for part 8a is revised to read as follows:

Authority: 38 U.S.C. 501, and 2101 through 2106, unless otherwise noted.

§§ 8a.5 through 8a.7 [Removed]

2. Sections 8a.5 through 8a.7 are removed.

§ 8a.1 [Amended]

3. In § 8a.1, paragraphs (a) and (b) are removed; paragraphs (c), (d), (e), (f) and (g) are redesignated as paragraphs (a), (b), (c), (d) and (e) respectively; newly redesignated paragraph (b) is amended by adding ''(VMLI)'' after ''Veterans Mortgage Life Insurance''; and newly redesignated paragraph (e)(3) is amended by removing ''Chief Benefits Director'' and adding, in its place, ''Under Secretary for Benefits''.

§ 8a.2 [Amended]

4. In § 8a.2, paragraph (a), is a amended by removing ''Veterans Mortgage Life Insurance (VMLI)'' and adding, in its place, ''VMLI''; paragraph (a) is further amended by removing ''8a.4(b) of this title, the amount of Veterans Mortgage Life Insurance'' and adding, in its place, ''8a.4(a) the amount of VMLI''; paragraph (b)(4) is amended by removing, ''purchased or adapted in part with a grant, or subsequently acquired housing unit''; in paragraph (b)(6) the first sentence is removed; and paragraphs (b)(4), (b)(6), (b)(8) and (c) are amended by removing ''Veterans Mortgage Life Insurance'' each time and adding, in its place, ''VMLI''.

§ 8a.3 [Amended]

5. In § 8a.3, paragraphs (a), (b), (c), and (e) are amended by removing ''Veterans Mortgage Life Insurance'' each time and adding, in its place, ''VMLI''.

§ 8a.4 [Amended]

6. In § 8a.4, paragraph (a) is removed; paragraphs (b), (c) and (d) are redesignated as paragraph (a), (b) and (c) respectively; and newly redesignated paragraphs (a) and (c) are amended by removing ''Veterans Mortgage Life Insurance'' each time and adding, in its place, ''VMLI''.

[FR Doc. 96–14366 Filed 6–6–96; 8:45 am]

BILLING CODE 8320–01–P

38 CFR Part 20

RIN 2900–AI15

Rules of Practice: Elimination of Unnecessary Provisions Relating to Representation, Witnesses, and Access to Board Records

AGENCY: Department of Veterans Affairs.

ACTION: Final rule.

SUMMARY: This document amends the Rules of Practice for the Board of Veterans' Appeals (Board) to eliminate unnecessary provisions concerning individuals who may assist an attorney in presenting evidence and argument at the Board, concerning testimony from members of Congress and Congressional staffs, and concerning Board records. The Board adjudicates appeals of denials of claims for veterans' benefits.

EFFECTIVE DATE: June 7, 1996.

FOR FURTHER INFORMATION CONTACT: Steven L. Keller, Chief Counsel, Board of Veterans' Appeals, Department of Veterans Affairs, 810 Vermont Avenue, NW., Washington, DC 20420 (202–565–5978).

SUPPLEMENTARY INFORMATION: This document eliminates from the Board's Rules of Practice provisions which are no longer necessary.

In § 20.606, relating to legal interns, law students and paralegals, former paragraph (a) is deleted. Previously, that paragraph limited to two the number of such individuals who may assist an attorney in presenting evidence and argument at the Board. Particularly with the limitation in former paragraph (d) of § 20.606—which limits to two the number of such individuals who may make a presentation at a hearing and permits the presiding Member to limit participation at a hearing—we do not believe the limitation in paragraph (a) is needed. New paragraph (d) (former paragraph (e)) is amended to provide that a presiding Member of a hearing—as well as the Chairman—may withdraw permission for a legal intern, law student or paralegal to prepare and present cases before the Board if the individual demonstrates incompetence, unprofessional conduct, or interference with the appellate process.

Section 20.710, relating to witnesses at hearings, is rewritten to delete specific instructions that Members of Congress and Congressional staff may testify at a hearing, and to delete the extensive discussion of the nature of an affirmation (as opposed to an oath). We do not believe either provision is necessary.

Section 20.1300, relating to access to Board records, is rewritten to limit its

applicability to removal of Board records. Previous paragraphs (b) through (e) restate statutory and other regulatory provisions regarding access to records which we believe are unnecessary in the Board's Rules of Practice.

This final rule concerns agency procedure or practice and, consequently, pursuant to 5 U.S.C. 553, is exempt from notice and comment requirements.

The Secretary hereby certifies that this final rule will not have a significant economic impact on a substantial number of small entities as they are defined in the Regulatory Flexibility Act, 5 U.S.C. 601–612. This rule will affect VA beneficiaries and will not affect small businesses. Therefore, pursuant to 5 U.S.C. 605(b), this final rule is exempt from the initial and final regulatory flexibility analyses requirements of §§ 603 and 604.

List of Subjects in 38 CFR Part 20

Administrative practice and procedure, Claims, Lawyers, Legal services, Veterans.

Approved: May 31, 1996.

Jesse Brown,

Secretary of Veterans Affairs.

For the reasons set out in the preamble, 38 CFR part 20 is amended as set forth below:

PART 20—BOARD OF VETERANS' APPEALS: RULES OF PRACTICE

1. The authority citation for part 20 continues to read as follows:

Authority: 38 U.S.C. 501(a).

Subpart G—Representation

§ 20.606 [Amended]

2. In § 20.606, paragraph (a) is removed; and paragraphs (b), (c), (d) and (e) are redesignated as paragraphs (a), (b), (c) and (d), respectively.

3. In § 20.606, newly redesignated paragraph (c) is amended by removing ''paragraph (b)'' in the fourth sentence and adding, in its place, ''paragraph (a)''

4. In § 20.606, newly redesignated paragraph (d) is amended by adding ''or presiding Member'' immediately following ''Chairman'' in the last sentence.

Subpart H—Hearings on Appeal

5. Section 20.710 is revised to read as follows:

§ 20.710 Rule 710. Witnesses at hearings.

The testimony of witnesses, including appellants, will be heard. All testimony must be given under oath or affirmation. Oath or affirmation is not required for the sole purpose of presenting contentions and argument.

Authority: 38 U.S.C. 7102, 7105(a), 7107.

Subpart N—Miscellaneous

6. Section 20.1300 is revised to read as follows:

§ 20.1300 Rule 1300. Removal of Board records.

No original record, paper, document or exhibit certified to the Board may be taken from the Board except as authorized by the Chairman or except as may be necessary to furnish copies or to transmit copies for other official purposes.

Authority: 38 U.S.C. 5701.

[FR Doc. 96–14364 Filed 6–6–96; 8:45 am]

BILLING CODE 8320–01–P

DEPARTMENT OF DEFENSE

DEPARTMENT OF VETERANS AFFAIRS

38 CFR Part 21

RIN 2900–AH64

Post-Vietnam Era Veterans' Educational Assistance: Miscellaneous

AGENCIES: Department of Defense and Department of Veterans Affairs.

ACTION: Final rule.

SUMMARY: This document amends the regulations concerning the Post-Vietnam Era Veterans' Educational Assistance Program (VEAP). It removes provisions that are obsolete, duplicative, or otherwise unnecessary. It also makes changes for purposes of clarification.

EFFECTIVE DATE: June 7, 1996.

FOR FURTHER INFORMATION CONTACT: June C. Schaeffer, Assistant Director for Policy and Program Administration, Education Service, Veterans Benefits Administration, Department of Veterans Affairs, 202–273–7187.

SUPPLEMENTARY INFORMATION: The regulations governing VEAP are set forth in 38 CFR Part 21, Subpart G (see 38 CFR 21.5001 through 21.5300). This document amends these regulations as discussed below.

Section 21.5001 is revised to specify delegations of authority to various employees to make decisions concerning claims for benefits under VEAP. Previously these delegations were included by incorporation by reference.

Section 21.5020 is revised by referring readers to applicable statutory provisions instead of restating the statutory provisions.

Section 21.5021 is amended to correct a typographical error.

Section 21.5022 is amended to update information concerning the relationship between VEAP benefits and other benefit programs.

Section 21.5040 contained a paragraph that required each person who was eligible for educational assistance under both the Vietnam Era GI Bill and VEAP to elect under which program he or she wished to receive benefits. These provisions are removed. Since the Vietnam Era GI Bill has expired, no one is eligible under both programs. However, if such an election was made in the past, it remains irrevocable by statute (see 38 U.S.C. 3221(f)).

Section 21.5058 is amended by removing a reference to § 21.4703, since § 21.4703 was removed by another Federal Register document. Also, the reference to § 21.4703 is replaced by a reference to the corresponding statutory provision.

Section 21.5060 contained material concerning disenrollment from VEAP by individuals who instead chose to participate in the Vietnam Era GI Bill. Since individuals can no longer do that, the material is removed.

Section 21.5064 contained provisions concerning an officer adjustment benefit. Eligibility can no longer be established for this benefit. Therefore, this material is obsolete and is removed.

Section 21.5074 contained provisions for reducing the monthly payment made to a VEAP participant who has excessive absences during that month. Due to a statutory change, these provisions applied only to absences occurring prior to December 18, 1989. Consequently, this section is obsolete and is removed.

Section 21.5100 is amended by replacing obsolete authority citations with current citations.

Section 21.5103 is amended by removing obsolete rules concerning when travel connected with counseling will be reimbursed by the Department of Veterans Affairs (VA), and replacing those rules with a reference to the sections of the U.S. Code that govern these reimbursements.

Section 21.5130 contained statements as to which of several regulations governing payments of educational assistance VA will apply to the payments of educational assistance under VEAP. This section is revised to eliminate references to sections and paragraphs that no longer exist.

Section 21.5132 is amended by removing provisions that are no longer necessary because they applied only to payments that have already been made.

Section 21.5141 contained the rules for determining the amount of tutorial assistance for which a VEAP participant may be eligible. The method for making this determination is the same as the method used in determining tutorial assistance for several of the other educational assistance programs VA administers, such as the Montgomery GI Bill—Active Duty program. Hence, instead of repeating the detailed instructions in § 21.5141, the same instructions in § 21.4236 are incorporated by reference.

Section 21.5145 is removed because it is no longer necessary. VA recently revised § 21.4145 so that it applies to VA's work-study programs in all the education programs VA administers. There is no need for a separate regulation restating work-study provisions for VEAP participants.

In § 21.5200, paragraph (f) contained material concerning absences which, as noted above, no longer is applicable. Hence, this material is obsolete and is removed.

Section 21.5300, and a reference in § 21.5292 to § 21.5300, are removed because § 21.5300 merely concerned the applicability of sections that were removed by another Federal Register document.

This document also makes changes to some of the sections referred to above for clarification.

This document removes provisions that are obsolete, duplicative, or without substantive effect and makes changes for clarification. This document makes no substantive changes. Accordingly, there is a basis for dispensing with prior notice and comment and delayed effective date provisions of 5 U.S.C. 552 and 553.

The Secretary of Veterans Affairs and the Secretary of Defense hereby certify that this final rule will not have a significant economic impact on a substantial number of small entities as they are defined in the Regulatory Flexibility Act, 5 U.S.C. 601–612. This final rule makes no substantive changes. Pursuant to 5 U.S.C. 605(b), this final rule, therefore, is exempt from the initial and final regulatory flexibility analyses requirements of §§ 603 and 604.

The Catalog of Federal Domestic Assistance number for the program affected by these regulations is 64.120.

List of Subjects in 38 CFR Part 21

Administrative practice and procedure, Armed forces, Civil rights, Claims, Colleges and universities, Conflict of interests, Defense Department, Education, Employment, Grant programs—education, Grant programs—veterans, Health care, Loan programs—education, Loan programs—veterans, Manpower training programs, Reporting and recordkeeping requirements, Schools, Travel and transportation expenses, Veterans, Vocational education, Vocational rehabilitation.

Approved: May 22, 1996.

Jesse Brown,

Secretary of Veterans Affairs.

Samuel E. Ebbesen,

Lieutenant General, USA, Deputy Assistant Secretary (Military Personnel Policy), Department of Defense.

For the reasons set out in the preamble, 38 CFR part 21 (subpart G) is amended as set forth below.

PART 21—VOCATIONAL REHABILITATION AND EDUCATION

Subpart G—Post-Vietnam Era Veterans' Educational Assistance Under 38 U.S.C. Chapter 32

1. The authority citation for 38 CFR part 21, subpart G is revised to read as follows:

Authority: 38 U.S.C. 501(a), ch. 32, unless otherwise noted.

2. Section 21.5001 is revised to read as follows:

§ 21.5001 Administration of benefits: 38 U.S.C. Chapter 32.

(a) *Delegation of authority.* Except as otherwise provided, authority is delegated to the Under Secretary for Benefits and to supervisory or administrative personnel within the jurisdiction of the Education Service, Veterans Benefits Administration, designated by him or her to make findings and decisions under 38 U.S.C. Chapter 32 and the applicable regulations, precedents, and instructions, as to the program authorized by subpart G of this part.

(Authority: 38 U.S.C. 512(a))

(b) *Administrative provisions.* In administering benefits payable under 38 U.S.C. Chapter 32, VA will apply the following sections:

(1) Section 21.4002—Finality of decisions;

(2) Section 21.4003 (except paragraphs (d) and (e))—Revision of decisions;

(3) Section 21.4005—Conflicting interests;

(4) Section 21.4006—False or misleading statements;

(5) Section 21.4007—Forfeiture;

(6) Section 21.4008—Prevention of overpayments; and

(7) Section 21.4009—Overpayments; waiver or recovery.

(Authority: 38 U.S.C. 3241(a), 3680, 3683, 3685, 3690, 6103)

3. Section 21.5020 is revised to read as follows:

§ 21.5020 Post-Vietnam era veterans' educational assistance.

Title 38 U.S.C. Chapter 32 provides for a participatory program for educational assistance benefits to eligible veterans and servicepersons. The intent of the Congress for this program is stated in 38 U.S.C. 3201.

(Authority: 38 U.S.C. 3201)

4. In § 21.5021, the authority citation following paragraph (b)(5) is amended by removing ''320'' and adding, in its place, ''3202)'' and the authority citation following paragraph (c) is amended by removing ''101'' and adding, in its place, ''101(20)''.

5. In § 21.5022, paragraphs (a), (b)(1)(i), (b)(1)(ii), (b)(1)(iii), and (b)(1)(iv) are revised, and paragraphs (b)(1)(v), (b)(1)(vi), and (b)(1)(vii) are added, to read as follows:

§ 21.5022 Eligibility under more than one program.

(a) *Concurrent benefits under more than one program.* An individual may not receive educational assistance under 38 U.S.C. Chapter 32 concurrently with benefits under any of the following provisions of law:

(1) 38 U.S.C. Chapter 31;

(2) 38 U.S.C. Chapter 35;

(3) 10 U.S.C. Chapter 107;

(4) 10 U.S.C. Chapter 1606;

(5) Section 903 of the Department of Defense Authorization Act, 1981 (10 U.S.C. 2141 note); or

(6) The Omnibus Diplomatic Security and Antiterrorism Act of 1986.

(Authority: 38 U.S.C. 3681(b))

(b) *Total eligibility under more than one program.*

(1) * * *

(i) 38 U.S.C. Chapter 30;

(ii) 38 U.S.C. Chapter 35;

(iii) 10 U.S.C. Chapter 107;

(iv) 10 U.S.C. Chapter 1606;

(v) Section 903 of the Department of Defense Authorization Act, 1981 (10 U.S.C. 2141, note);

(vi) The Hostage Relief Act of 1980 (5 U.S.C. 5561 note); or

(vii) The Omnibus Diplomatic Security and Antiterrorism Act of 1986.

* * * * *

6. In § 21.5040, paragraph (g) is removed and paragraph (h) is redesignated as paragraph (g).

7. In § 21.5058, paragraph (b) is amended by removing ''§ 21.4703 of this part'' and adding, in its place, ''sec. 207, Pub. L. 101–366, 104 Stat. 442,''.

8. In § 21.5060, paragraph (a)(2) is revised to read as follows:

§ 21.5060 Disenrollment.

(a) *Voluntary disenrollment.* * * *

(2) At any time within the initial 12 months of participation, an individual may elect to disenroll for reasons of personal hardship only.

(Authority: 38 U.S.C. 3221(a), (b))

* * * * *

9. In § 21.5064, paragraphs (b)(1) and (b)(2) are revised to read as follows:

§ 21.5064 Refund upon disenrollment.

* * * * *

(b) *Effective date of refund.* * * *

(1) If an individual voluntarily disenrolls from the program before discharge or release from active duty, VA will refund the individual's unused contributions:

(i) On the date of the participant's discharge or release from active duty; or

(ii) Within 60 days of VA's receipt of notice of the individual's discharge or disenrollment; or

(iii) As soon as possible after VA's receipt of notice indicating that an earlier refund is needed due to hardship or for other good reasons.

(Authority: 38 U.S.C. 3223(b), 3232)

(2) If an individual voluntarily disenrolls from the program after discharge or release from active duty under other than dishonorable conditions, his or her contributions shall be refunded within 60 days of receipt by VA of an application for a refund from the individual.

(Authority: 38 U.S.C. 3202(1)(A), 3223(c), 3232(b))

* * * * *

§ 21.5074 [Removed]

10. Section 21.5074 is removed.

§ 21.5100 [Amended]

11. In § 21.5100, the authority citation following paragraph (b) is amended by removing ''3463; Pub. L. 96–466, Pub. L. 99–576'', and adding, in its place, ''3697A(a)''; the authority citation following paragraph (c) is amended by removing ''3463; Pub. L. 99–466, Pub. L. 99–576'' and adding, in its place, ''3241, 3697A (a) and (b)''; and the authority citation following paragraph (d) is amended by removing ''3697A'' and adding, in its place, ''3697A(c)''.

12. Section 21.5103 is revised to read as follows:

§ 21.5103 Travel expenses.

(a) *General.* VA shall determine and pay the necessary expense of travel to and from the place of counseling for a veteran who is required to receive counseling as provided under 38 U.S.C. 111 (a), (d), (e), and (g).

(Authority: 38 U.S.C. 111(a), (d), (e), and (g))

(b) *Restriction.* VA will not pay the necessary cost of travel to and from the place of counseling when counseling is not required, but is provided as a result of a voluntary request by the veteran.

(Authority: 38 U.S.C. 111)

13. In § 21.5130, paragraph (a) is amended by removing ''(except paragraph (e))''; the authority citations following paragraphs (a) and (b) are removed; paragraph (d) is amended by removing ''paragraphs (b), (c), (d), (o), and (v)'' and adding, in its place, ''paragraph (b)''; the authority citation following paragraph (d) is removed; paragraph (e) is amended by removing ''paragraphs (a), (b), and (c)'' and adding, in its place, ''paragraph (b)''; paragraph (f) is removed; paragraphs (g) and (h) are redesignated as paragraphs (f) and (g), respectively; the authority citations following newly redesignated paragraphs (f) and (g) are amended by removing ''3241'' and adding, in its place, ''3241(a)''; and the introductory text is revised to read as follows:

§ 21.5130 Payments; educational assistance allowance.

VA will apply the following sections in administering benefits payable under 38 U.S.C. Chapter 32:

* * * * *

14. In § 21.5132, paragraph (b)(2) is removed; and paragraph (b)(3) is redesignated as paragraph (b)(2) and is revised to read as follows:

§ 21.5132 Criteria used in determining benefit payments.

* * * * *

(b) *Contributions.* * * *

(2) The amount the Secretary of Defense has contributed to the fund for the individual.

(Authority: 38 U.S.C. 3231)

15. Section 21.5141 is revised to read as follows:

§ 21.5141 Tutorial assistance.

An individual who is otherwise eligible to receive benefits under the Post-Vietnam Era Veterans' Educational Assistance Program may receive supplemental monetary assistance to provide tutorial services. In determining whether VA will pay the individual this assistance, VA will apply the provisions of § 21.4236.

(Authority: 38 U.S.C. 3234, 3492)

§ 21.5145 [Removed]

16. Section 21.5145 is removed.

§ 21.5200 [Amended]

17. In § 21.5200, paragraph (f) is removed and reserved.

§ 21.5292 [Amended]

18. In § 21.5292, paragraph (e)(2) is amended by removing ''21.5300'' and adding, in its place, ''21.5270''.

19. The undesignated center heading preceding § 21.5300 is removed.

§ 21.5300 [Removed]

20. Section 21.5300 is removed.

[FR Doc. 96–14202 Filed 6–6–96; 8:45 am]

BILLING CODE 8320–01–P

DEPARTMENT OF THE INTERIOR

Bureau of Land Management

43 CFR Parts 2120, 4100, 4600

[WO–160–1820–02–24 1A]

RIN 1004–AC66

Leases; Grazing Administration

AGENCY: Bureau of Land Management, Interior.

ACTION: Final rule.

SUMMARY: This administrative final rule transfers the regulations at 43 CFR Subpart 2120 in their entirety to a new 43 CFR Part 4600 which is under Subchapter D, Range Management. The regulations at former part 2120 were included under 43 CFR Group 2100, Acquisitions. The regulations at the former Part 2120 implement provisions of the Pierce Act (43 U.S.C. 315m-1 to 315m-4 inclusive) to provide for the lease of State, county or privately owned land located in grazing districts. The purpose of this transfer is to consolidate all range management regulations for public convenience in one area of Title 43. This administrative final rule also adds a reference to new Part 4600 in Subpart 4130 and corrects a cross reference citation in former part 2120.

EFFECTIVE DATE: July 8, 1996.

FOR FURTHER INFORMATION CONTACT: Frank Bruno, Regulatory Management, (202) 452–0352.

SUPPLEMENTARY INFORMATION: This section of the regulations explains that the Bureau of Land Management (BLM) may seek to lease land from the owners of State, county, or privately owned lands located within grazing districts that are chiefly valuable for grazing and are necessary to promote the orderly use, improvement and development of grazing districts. This section of the regulations has been in 43 CFR Group 2100, entitled Acquisitions, because this

element of the range management program concerns acquisition through the lease of State, county or privately owned land within a grazing district. As a result, these regulations were grouped with unrelated acquisitions such as gifts and exchanges. The new 43 CFR Part 4600 will be contained in Subchapter D, entitled Range Management. Since all regulations concerning range management are in Subchapter D, transferring the regulations formerly at 43 CFR Part 2120 to Subchapter D will consolidate all range regulations in one place thus making it more convenient. A cross-reference to new Subpart 4600 has been added in 43 CFR 4130.2 and a cross-reference corrected 43 CFR 2121.5.

Procedural Matters

The BLM has determined for good cause that notice and public procedure pursuant to the Administrative Procedure Act (5 U.S.C. 553(b)(3)(B)) are unnecessary for this rulemaking. Notice and public participation are unnecessary because the rulemaking merely transfers existing regulations to a new Part of Title 43 of the Code of Federal Regulations, adds a cross-reference, and corrects a cross reference. No substantive change has been made to the regulations except to redesignate numbering, provide a cross reference to new Part 4600 in Part 4100, and correct a cross reference in newly designated Section 4160.5.

The principal author of this final rule is Frank Bruno, Regulatory Management Team, BLM.

This rule is an administrative action and not subject to the Office of Management and Budget review under Executive Order 12866.

It is hereby determined that this final rule does not constitute a major Federal action significantly affecting the quality of the human environment, and that no detailed statement pursuant to Section 102(2)(C) of the National Environmental Policy Act of 1969 (42 U.S.C. 4332(2)(C)) is required. The BLM has determined that this final rule, which is a purely administrative action, is categorically excluded from further environmental review pursuant to 516 Departmental Manual (DM), Chapter 2, Appendix 1, Item 1.10, and that the proposal would not significantly affect the 10 criteria for exceptions listed in 516 DM 2, Appendix 2. Pursuant to the Council on Environmental Quality regulations (40 CFR 1508.4) and environmental policies and procedures of the Department of the Interior, ''categorical exclusions'' means a category of actions that the Department has determined ordinarily do not individually or cumulatively have a significant effect on the human environment.

The rule will not have a significant impact on a substantial number of small entities under the Regulatory Flexibility Act (5 U.S.C. 601 *et seq.*) because it merely transfers a regulation to another Part of Title 43 of the Code of Federal Regulations and makes no substantive change.

This rule does not contain information collection requirements that require approval by the Office of Management and Budget under 44 U.S.C. 3501 *et seq.*

List of Subjects in 43 CFR Part 4600

Grazing lands.

Dated: May 29, 1996.

Bob Armstrong,

Assistant Secretary of the Interior.

PART 2120—[REDESIGNATED AS PART 4600]

I

1. Part 2120 is redesignated as 43 CFR Part 4600 in new Group 4600—Leases as shown in the following redesignation table:

REDESIGNATION TABLE

Old 43 CFR part 2120	New 43 CFR part 4600
Subpart 2120	Subpart 4600.
2120.0–2	4600.0–2.
2120.0–3	4600.0–3.
Subpart 2121	Subpart 4610.
2121.1	4610.1.
2121.1–1	4610.1–1.
2121.1–2	4610.1–2.
2121.2	4610.2.
2121.2–1	4610.2–1.
2121.2–2	4610.2–2.
2121.2–3	4610.2–3.
2121.3	4610.3.
2121.4	4610.4.
2121.4–1	4610.4–1.
2121.4–2	4610.4–2.
2121.4–3	4610.4–3.
2121.5	4610.5.

2. The authority for the redesignated Part 4600 continues to read as follows:

Authority: 48 Stat. 1270; 43 U.S.C. 315a.

Subpart 4130—Authorizing Grazing Use

3. Section 4130.2 is amended by adding paragraph (j) to read as follows:

4130.2 Grazing permits or leases.

* * * * *

(j) Provisions explaining how grazing permits or authorizations may be granted for grazing use on state, county or private land leased by the Bureau of Land Management under ''The Pierce Act'' and located within grazing districts are explained in 43 CFR part 4600.

PART 4600—LEASES OF GRAZING LAND—PIERCE ACT

4. The title of the newly designated part 4600, formerly part 2120, is revised to read as set forth above.

Subpart 4600—General

5. The title of the newly designated subpart 4600, formerly subpart 2120, revised to read as set forth above.

§ 4610.5 Improvements by the United States on leased lands.

6. Newly designated section 4610.5, formerly section 2121.5, is amended by removing ''part 4110 of this chapter'' and replacing it with ''subpart 4120 of Subchapter D.''

[FR Doc. 96–14097 Filed 6–6–96; 8:45 am]

BILLING CODE 4310–84–P

DEPARTMENT OF TRANSPORTATION

National Highway Traffic Safety Administration

49 CFR Parts 541, 565, 567, 571

[Docket No. 95–85; Notice 2]

RIN 2127–AF69

Vehicle Identification Number Requirements

AGENCY: National Highway Traffic Safety Administration (NHTSA), Department of Transportation (DOT).

ACTION: Final rule.

SUMMARY: In this final rule, NHTSA combines its vehicle identification number (VIN) requirements in a single regulation, Part 565. Previously, the VIN requirements were specified in two separate regulations, Federal Motor Vehicle Safety Standard No. 115 and Part 565. This action is part of the President's Regulatory Reinvention Initiative and seeks to make NHTSA's VIN requirements easier to understand and to apply. In accordance with Federal metrication policy, NHTSA also converts English measurements specified in Part 565 to metric measurements. NHTSA makes no substantive changes in any regulatory requirements.

DATES: *Effective Date:* This final rule is effective July 8, 1996.

Petitions for Reconsideration: Any petitions for reconsideration of this final rule must be received by NHTSA no later than July 22, 1996.

ADDRESSES: Any petitions for reconsideration of this final rule should refer to the docket and notice number set forth in the heading of this notice and be submitted to: Administrator, National Highway Traffic Safety Administration, 400 Seventh Street, SW., Washington, DC 20590.

FOR FURTHER INFORMATION CONTACT: Dr. Leon Delarm, Office of Vehicle Safety Standards, National Highway Traffic Safety Administration, 400 Seventh Street, SW., Washington, DC 20590. Telephone number 202–366–4920.

SUPPLEMENTARY INFORMATION:

Background and Regulatory Reinvention Initiative

Pursuant to the March 4, 1995 directive from the President to the heads of departments and agencies, ''Regulatory Reinvention Initiative,'' NHTSA reviewed all its regulations and directives. During this review, the agency identified not only those rules or portions of rules that might be deleted or rescinded but also rules that could be consolidated to avoid duplication or redrafted to make them easier to read. NHTSA's vehicle identification number requirements were identified as a candidate for amendment to make the requirements easier to understand and to apply.

Notice of Proposed Rulemaking

In a notice of proposed rulemaking (NPRM) published October 25, 1995 (60 FR 54658), the agency proposed to transfer the text of Federal Motor Vehicle Safety Standard No. 115 (49 CFR 571.115) *Vehicle identification number—basic requirements* to Part 565 *Vehicle identification number—content requirements.* A vehicle identification number (VIN) is a seventeen character series of Arabic numbers and Roman letters which is assigned to a vehicle for identification purposes. Standard No. 115 specifies general physical requirements for a VIN plate or label and its installation and Part 565 specifies VIN content and format.

In the NPRM, NHTSA stated its tentative conclusion that consolidation of the VIN requirements into one regulation would make it easier for motor vehicle manufacturers to understand and to apply those requirements. Many small manufacturers of motor vehicles (including trailers) apparently find the necessity of consulting two separate VIN regulations (i.e., Standard No. 115 and Part 565) cumbersome and confusing. Thus, NHTSA proposed to consolidate all VIN requirements into one regulation. NHTSA stated it did not intend to make any substantive changes to its VIN requirements as a result of the proposed consolidation.

Since VIN requirements are referenced in other NHTSA regulations, such as Part 541 *Federal Motor Vehicle Theft Prevention Standard* and Part 567 *Certification,* NHTSA also proposed to make conforming changes to those references.

NHTSA also proposed to convert part 565 measurements from the English system of measurement to the metric system. The metric conversions were proposed so NHTSA could continue to implement the Federal policy that the metric system of measurement is the preferred system of weights and measures for United States trade and commerce. Specifically, NHTSA proposed that English unit measurements of gross vehicle weight ratings (GVWRs) in Table II of part 565 be exactly converted to the metric system. Thus, the agency proposed that a GVWR of 10,000 pounds be converted to 4536 kilograms (kg.), the exact converted figure, instead of 4500 kg, the equivalent converted figure. To accommodate those persons unfamiliar with the metric system, NHTSA proposed that part 565 present the English and metric measurements indefinitely.

Public Comments on the NPRM and NHTSA's Responses

In response to the NPRM, NHTSA received comments from Advocates for Highway and Auto Safety, Chrysler, Flxible Corporation, Ford, National Automobile Dealers Association (NADA), Navistar, General Motors and Toyota. Advocates, Chrysler, Ford, General Motors and NADA agreed with NHTSA's proposal to consolidate all VIN requirements in Part 565, and to provide measurements in both English and metric units.

Several commenters noted typographical errors. Ford, General Motors, and Navistar each pointed out the same typographical errors in the proposed text of sections 565.6(a) and 565.6(b). NHTSA agrees with the recommended corrections and makes them in the final rule. Toyota stated its belief that there was a discrepancy between proposed section 565.7(b) and proposed section 565.7(d) as to deadlines for manufacturers to provide VIN information to NHTSA. After reviewing Part 565, NHTSA notes that the reference to ''paragraph (b)'' in proposed section 565.7(d) was a typographical error, and removes the reference in the final rule.

Flxible Corporation expressed concern that metrication of the measurements in the VIN requirements (but retaining English measurements for the present) may result in both English and metric units being displayed on VIN tags, necessitating larger tags. There appears to have been a misunderstanding about the proposal. In commenting, Flxible may have been assuming that this rulemaking would somehow have affected its obligation under 49 CFR Part 567, *Certification,* to state a vehicle's GVWR on its certification label. Nothing that NHTSA proposed for Part 565 would amend Part 567 or otherwise result in manufacturers providing information in addition to the seventeen digits specified as the VIN. NHTSA notes that its proposal to metricate Part 565 would only amend Table II. Table II specifies GVWR classes for motor vehicles. Previously, the Table II GVWR classes were only described according to English measurements. The NPRM proposed that the weight classes be described in the regulation according to both metric and English measurements. While a vehicle's GVWR class, as determined under Table II, must be encoded in its VIN, the class is not required by Part 565 to be directly placed on the vehicle. The GVWR class is not currently required by Part 565 to be placed on the vehicle in English units and will not be required as a result of this rulemaking to be placed on the vehicle in both units.

Final Rule

NHTSA is adopting its proposal without change, except that it has corrected the previously discussed typographical errors noted by Ford, General Motors, Navistar and Toyota.

Effective Date

In the NPRM, NHTSA tentatively decided that there was good cause shown for concluding that an effective date earlier than 180 days after issuance would be in the public interest. The agency proposed that, if adopted, the effective date for the final rule be 30 days after its publication in the Federal Register. NHTSA received no comments on this issue. Accordingly, the agency has decided that there is good cause shown for concluding that an effective date earlier than 180 days after issuance is in the public interest. The final rule will take effect 30 days after its publication in the Federal Register.

Rulemaking Analyses and Notices

1. Executive Order 12866 and DOT Regulatory Policies and Procedures

This final rule was not reviewed under E. O. 12866 (Regulatory Planning and Review). NHTSA has analyzed the

impact of this rulemaking action and determined that it is not ''significant'' within the meaning of the Department of Transportation's regulatory policies and procedures. The rule does not impose any costs or yield any savings, but consolidates the agency's requirements for manufacturers to assign vehicle identification numbers (VINs) to motor vehicles. The changes make it easier for manufacturers to understand and apply the VIN requirements. The agency makes no substantive changes as a result of the consolidation. Since there are no impacts, preparation of a full regulatory evaluation is not warranted.

2. Regulatory Flexibility Act

The agency has considered the effects of this regulatory action under the Regulatory Flexibility Act. I hereby certify that the final rule will not have a significant economic impact on a substantial number of small entities. As explained above, the rule does not impose any new costs or provide any savings. It will make it easier for motor vehicle manufacturers, many of which are small businesses, to understand and apply the agency's requirements for vehicle identification numbers. For these reasons, small businesses, small governmental organizations, and small organizations which purchase motor vehicles or rely on VINs for other recordkeeping or administrative matters, will not be affected by the rule. Accordingly, a final regulatory flexibility analysis has not been prepared.

3. Paperwork Reduction Act

The information collection requirements in this rule have been submitted to and approved by the Office of Management and Budget (OMB) pursuant to the requirements of the Paperwork Reduction Act (44 U.S.C. 3501 *et seq.*). This collection of information has been assigned OMB Control Number 2127–0510 (''Consolidated VIN Requirements and Motor Vehicle Theft Prevention Standard'') and has been approved for use through June 30, 1996. NHTSA has undertaken measures for OMB approval to extend this collection of information.

4. Executive Order 12612 (Federalism)

This final rule has been analyzed in accordance with the principles and criteria contained in Executive Order 12612. The agency has determined that the rule does not have sufficient Federalism implications to warrant preparation of a Federalism Assessment. No State laws will be affected.

5. National Environmental Policy Act

The agency has considered the environmental implications of this final rule in accordance with the National Environmental Policy Act of 1969 and determined that the final rule will not have any significant impact on the quality of the human environment.

6. Executive Order 12778 (Civil Justice Reform)

This final rule will not have any retroactive effect. Under 49 U.S.C. 30103, whenever a Federal motor vehicle safety standard is in effect, a State may not adopt or maintain a safety standard applicable to the same aspect of performance which is not identical to the Federal standard, except to the extent that State requirement imposes a higher level of performance and applies only to vehicles procured for the State's use. 49 U.S.C. 30161 sets forth a procedure for judicial review of final rules establishing, amending or revoking Federal motor vehicle safety standards. This section does not require submission of a petition for reconsideration or other administrative procedures before parties may file suit in court.

List of Subjects

49 CFR Part 541

Crime, Labeling, Motor vehicles, Reporting and recordkeeping requirements.

49 CFR Part 565

Motor vehicle safety, Reporting and recordkeeping requirements.

49 CFR Part 567

Labeling, Motor vehicle safety, Reporting and recordkeeping requirements.

49 CFR Part 571

Motor vehicle safety, Reporting and recordkeeping requirements, Tires.

In consideration of the foregoing, NHTSA is amending 49 CFR parts 541, 565, 567, and 571 as set forth below.

PART 541—[AMENDED]

1. The authority citation for part 541 continues to read as follows:

Authority: 49 U.S.C. 33101, 33102, 33103, 33105; delegation of authority at 49 CFR 1.50.

2. In § 541.4, paragraph (b)(7) is revised to read as follows:

§ 541.4 Definitions.

* * * * *

(b) *Other definitions.* * * *

(7) *VIN* means the vehicle identification number required by part 565 of this chapter.

3. Part 565 is revised to read as follows:

PART 565—VEHICLE IDENTIFICATION NUMBER REQUIREMENTS

Sec.
565.1 Purpose and scope.
565.2 Applicability.
565.3 Definitions.
565.4 General requirements.
565.5 Motor vehicles imported into the United States.
565.6 Content requirements.
565.7 Reporting requirements.

Authority: 49 U.S.C. 322, 30111, 30115, 30117, 30141, 30146, 30166, and 30168; delegation of authority at 49 CFR 1.50.

§ 565.1 Purpose and scope.

This part specifies the format, content and physical requirements for a vehicle identification number (VIN) system and its installation to simplify vehicle identification information retrieval and to increase the accuracy and efficiency of vehicle recall campaigns.

§ 565.2 Applicability.

This part applies to passenger cars, multipurpose passenger vehicles, trucks, buses, trailers (including trailer kits), incomplete vehicles, and motorcycles. Vehicles imported into the United States under 49 CFR 591.5(f), other than by the corporation responsible for the assembly of that vehicle or a subsidiary of such a corporation, are excluded from requirements of § 565.4(b), § 565.4(c), § 565.4(g), § 565.4(h), § 565.5 and § 565.6.

§ 565.3 Definitions.

(a) *Federal Motor Vehicle Safety Standards Definitions.* Unless otherwise indicated, all terms used in this part that are defined in 49 CFR 571.3 are used as defined in 49 CFR 571.3.

(b) *Body type* means the general configuration or shape of a vehicle distinguished by such characteristics as the number of doors or windows, cargo-carrying features and the roofline (e.g., sedan, fastback, hatchback).

(c) *Check digit* means a single number or the letter X used to verify the accuracy of the transcription of the vehicle identification number.

(d) *Engine type* means a power source with defined characteristics such as fuel utilized, number of cylinders, displacement, and net brake horsepower. The specific manufacturer and make shall be represented if the engine powers a passenger car or a multipurpose passenger vehicle, or truck with a gross vehicle weight rating of 4536 kg. (10,000 lbs.) or less.

(e) *Incomplete vehicle* means an assemblage consisting, as a minimum, of

frame and chassis structure, power train, steering system, suspension system and braking system, to the extent that those systems are to be part of the completed vehicle, that requires further manufacturing operations, other than the addition of readily attachable components, such as mirrors or tire and rim assemblies, or minor finishing operations such as painting, to become a completed vehicle.

(f) *Line* means a name that a manufacturer applies to a family of vehicles within a make which have a degree of commonality in construction, such as body, chassis or cab type.

(g) *Make* means a name that a manufacturer applies to a group of vehicles or engines.

(h) *Manufacturer* means a person—

(1) *Manufacturing* or assembling motor vehicles or motor vehicle equipment; or

(2) Importing motor vehicles or motor vehicle equipment for resale.

(i) *Model* means a name that a manufacturer applies to a family of vehicles of the same type, make, line, series and body type.

(j) *Model Year* means the year used to designate a discrete vehicle model, irrespective of the calendar year in which the vehicle was actually produced, so long as the actual period is less than two calendar years.

(k) *Plant of manufacture* means the plant where the manufacturer affixes the VIN.

(l) *Series* means a name that a manufacturer applies to a subdivision of a ''line'' denoting price, size or weight identification and that is used by the manufacturer for marketing purposes.

(m) *Trailer kit* means a trailer that is fabricated and delivered in complete but unassembled form and that is designed to be assembled without special machinery or tools.

(n) *Type* means a class of vehicle distinguished by common traits, including design and purpose. Passenger cars, multipurpose passenger vehicles, trucks, buses, trailers, incomplete vehicles and motorcycles are separate types.

(o) *VIN* means a series of Arabic numbers and Roman letters that is assigned to a motor vehicle for identification purposes.

§ 565.4 General requirements.

(a) Each vehicle manufactured in one stage shall have a VIN that is assigned by the manufacturer. Each vehicle manufactured in more than one stage shall have a VIN assigned by the incomplete vehicle manufacturer. Vehicle alterers, as specified in 49 CFR 567.7, shall utilize the VIN assigned by the original manufacturer of the vehicle.

(b) Each VIN shall consist of seventeen (17) characters.

(c) A check digit shall be part of each VIN. The check digit shall appear in position nine (9) of the VIN, on the vehicle and on any transfer documents containing the VIN prepared by the manufacturer to be given to the first owner for purposes other than resale.

(d) The VINs of any two vehicles manufactured within a 30-year period shall not be identical.

(e) The VIN of each vehicle shall appear clearly and indelibly upon either a part of the vehicle, other than the glazing, that is not designed to be removed except for repair or upon a separate plate or label that is permanently affixed to such a part.

(f) The VIN for passenger cars, multipurpose passenger vehicles and trucks of 4536 kg or less GVWR shall be located inside the passenger compartment. It shall be readable, without moving any part of the vehicle, through the vehicle glazing under daylight lighting conditions by an observer having 20/20 vision (Snellen) whose eye-point is located outside the vehicle adjacent to the left windshield pillar. Each character in the VIN subject to this paragraph shall have a minimum height of 4 mm.

(g) Each character in each VIN shall be one of the letters in the set: [ABCDEFGHJKLMNPRSTUVWXYZ] or a numeral in the set: [0123456789] assigned according to the method given in § 565.5.

(h) All spaces provided for in the VIN must be occupied by a character specified in paragraph (g) of this section.

(i) The type face utilized for each VIN shall consist of capital, sanserif characters.

§ 565.5 Motor vehicles imported into the United States.

(a) Importers shall utilize the VIN assigned by the original manufacturer of the motor vehicle.

(b) A passenger car certified by a Registered Importer under 49 CFR part 592 shall have a plate or label that contains the following statement, in characters with a minimum height of 4 mm, with the identification number assigned by the original manufacturer provided in the blank: SUBSTITUTE FOR U.S. VIN: _____ SEE PART 565. The plate or label shall conform to § 565.4 (h) and (i). The plate or label shall be permanently affixed inside the passenger compartment. The plate or label shall be readable, without moving any part of the vehicle, through the vehicle glazing under daylight lighting conditions by an observer having 20/20 vision (Snellen) whose eye-point is located outside the vehicle adjacent to the left windshield pillar. It shall be located in such a manner as not to cover, obscure, or overlay any part of any identification number affixed by the original manufacturer. Passenger cars conforming to Canadian Motor Vehicle Safety Standard 115 are exempt from this paragraph.

§ 565.6 Content requirements.

The VIN shall consist of four sections of characters which shall be grouped accordingly:

(a) The first section shall consist of three characters that occupy positions one through three (1–3) in the VIN. This section shall uniquely identify the manufacturer, make and type of the motor vehicle if its manufacturer produces 500 or more motor vehicles of its type annually. If the manufacturer produces less than 500 motor vehicles of its type annually, these characters along with the third, fourth and fifth characters of the fourth section shall uniquely identify the manufacturer, make and type of the motor vehicle. These characters are assigned in accordance with § 565.7(a).

(b) The second section shall consist of five characters, which occupy positions four through eight (4–8) in the VIN. This section shall uniquely identify the attributes of the vehicle as specified in Table I. For passenger cars, and for multipurpose passenger vehicles and trucks with a gross vehicle weight rating of 4536 kg. (10,000 lbs.) or less, the first and second characters shall be alphabetic and the third and fourth characters shall be numeric. The fifth character may be either alphabetic or numeric. The characters utilized and their placement within the section may be determined by the manufacturer, but the specified attributes must be decipherable with information supplied by the manufacturer in accordance with § 565.7(c). In submitting the required information to NHTSA relating to gross vehicle weight rating, the designations in Table II shall be used. The use of these designations within the VIN itself is not required. Tables I and II follow:

Table I—Type of Vehicle and Information Decipherable

Passenger car: Line, series, body type, engine type and restraint system type.

Multipurpose passenger vehicle: Line, series, body type, engine type, gross vehicle weight rating.

Truck: Model or line, series, chassis, cab type, engine type, brake system and gross vehicle weight rating.

Bus: Model or line, series, body type, engine type, and brake system

Trailer, including trailer kits and incomplete trailer: Type of trailer, body type, length and axle configuration.

Motorcycle: Type of motorcycle, line, engine type, and net brake horsepower.

Incomplete Vehicle other than a trailer: Model or line, series, cab type, engine type and brake system.

Note to Table I: Engine net brake horsepower when encoded in the VIN shall differ by no more than 10 percent from the actual net brake horsepower; shall in the case of motorcycle with an actual net brake horsepower of 2 or less, be not more than 2; and shall be greater than 2 in the case of a motorcycle with an actual brake horsepower greater than 2.

Table II—Gross Vehicle Weight Rating Classes

Class A—Not greater than 1360 kg. (3,000 lbs.)

Class B—Greater than 1360 kg. to 1814 kg. (3,001–4,000 lbs.)

Class C—Greater than 1814 kg. to 2268 kg. (4,001–5,000 lbs.)

Class D—Greater than 2268 kg. to 2722 kg. (5,001–6,000 lbs.)

Class E—Greater than 2722 kg. to 3175 kg. (6,001–7,000 lbs.)

Class F—Greater than 3175 kg. to 3629 kg. (7,001–8,000 lbs.)

Class G—Greater than 3629 kg. to 4082 kg. (8,001–9,000 lbs.)

Class H—Greater than 4082 kg. to 4536 kg. (9,001–10,000 lbs.)

Class 3—Greater than 4536 kg. to 6350 kg. (10,001–14,000 lbs.)

Class 4—Greater than 6350 kg. to 7257 kg. (14,001–16,000 lbs.)

Class 5—Greater than 7257 kg. to 8845 kg. (16,001–19,500 lbs.)

Class 6—Greater than 8845 kg. to 11793 kg. (19,501–26,000 lbs.)

Class 7—Greater than 11793 kg. to 14968 kg.(26,001–33,000 lbs.)

Class 8—Greater than 14968 kg. (33,001 lbs. and over)

(c) The third section shall consist of one character, which occupies position nine (9) in the VIN. This section shall be the check digit whose purpose is to provide a means for verifying the accuracy of any VIN transcription. After all other characters in VIN have been determined by the manufacturer, the check digit shall be calculated by carrying out the mathematical computation specified in paragraphs (c)(1) through (4) of this section.

(1) Assign to each number in the VIN its actual mathematical value and assign to each letter the value specified for it in Table III, as follows:

Table III—Assigned Values

A = 1
B = 2
C = 3
D = 4
E = 5
F = 6
G = 7
H = 8
J = 1
K = 2
L = 3
M = 4
N = 5
P = 7
R = 9
S = 2
T = 3
U = 4
V = 5
W = 6
X = 7
Y = 8
Z = 9

(2) Multiply the assigned value for each character in the VIN by the position weight factor specified in Table IV, as follows:

Table IV—VIN Position and Weight Factor

1st 8
2d 7
3d.....6
4th 5
5th 4
6th 3
7th 2
8th.....10
9th.....(check digit)
10th 9
11th.....8
12th.....7
13th.....6
14th.....5
15th.....4
16th.....3
17th.....2

(3) Add the resulting products and divide the total by 11.

(4) The numerical remainder is the check digit. If the remainder is 10 the letter ''X'' shall be used to designate the check digit. The correct numeric remainder, zero through nine (0–9) or the letter ''X,'' shall appear in VIN position nine (9).

(5) A sample check digit calculation is shown in Table V as follows:

TABLE V.—CALCULATION OF A CHECK DIGIT

VIN Position	1	2	3	4	5	6	7	8	9	10	11	12	13	14	15	16	17
Sample VIN	1	G	4	A	H	5	9	H	...	5	G	1	1	8	3	4	1
Assigned Value	1	7	4	1	8	5	9	8	...	5	7	1	1	8	3	4	1
Weight Factor	8	7	6	5	4	3	2	10	0	9	8	7	6	5	4	3	2
Multiply Assigned value times weight factor	8	49	24	5	32	15	18	80	0	45	56	7	6	40	12	12	2

Add products: 8+49+24+5+32+15+18+80+0+45+56+7+6+40+12+12+2 = 411
Divide by 11: 411/11 = 37 4/11
The remainder is 4; this is the check digit to be inserted in position nine (9) of the VIN

(d) The fourth section shall consist of eight characters, which occupy positions ten through seventeen (10–17) of the VIN. The last five (5) characters of this section shall be numeric for passenger cars and for multipurpose passenger vehicles and trucks with a gross vehicle weight rating of 4536 kg. (10,000 lbs.) or less, and the last four (4) characters shall be numeric for all other vehicles.

(1) The first character of the fourth section shall represent the vehicle model year. The year shall be designated as indicated in Table VI as follows:

TABLE VI.—YEAR CODES FOR VIN

Year	Code
1980	A
1981	B
1982	C
1983	D
1984	E
1985	F
1986	G
1987	H
1988	J
1989	K
1990	L
1991	M
1992	N

TABLE VI.—YEAR CODES FOR VIN—Continued

Year	Code
1993	P
1994	R
1995	S
1996	T
1997	V
1998	W
1999	X
2000	Y
2001	1
2002	2
2003	3
2004	4

TABLE VI.—YEAR CODES FOR VIN—Continued

Year	Code
2005	5
2006	6
2007	7
2008	8
2009	9
2010	A
2011	B
2012	C
2013	D

(2) The second character of the fourth section shall represent the plant of manufacture.

(3) The third through the eighth characters of the fourth section shall represent the number sequentially assigned by the manufacturer in the production process if the manufacturer produces 500 or more vehicles of its type annually. If the manufacturer produces less than 500 motor vehicles of its type annually, the third, fourth and fifth characters of the fourth section, combined with the three characters of the first section, shall uniquely identify the manufacturer, make and type of the motor vehicle and the sixth, seventh, and eighth characters of the fourth section shall represent the number sequentially assigned by the manufacturer in the production process.

§ 565.7 Reporting requirements.

The information collection requirements contained in this part have been approved by the Office of Management and Budget under the provisions of the Paperwork Reduction Act (44 U.S.C. 3501 *et seq.*) and have been assigned OMB Control Number 2127–0510.

(a) The National Highway Traffic Safety Administration (NHTSA) has contracted with the Society of Automotive Engineers (SAE) to coordinate the assignment of manufacturer identifiers. Manufacturer identifiers will be supplied by SAE at no charge. All requests for assignments of manufacturer identifiers should be forwarded directly to: Society of Automotive Engineers, 400 Commonwealth Avenue, Warrendale, Pennsylvania 15096, Attention: WMI Coordinator. Any requests for identifiers submitted to NHTSA will be forwarded to SAE. Manufacturers may request a specific identifier or may request only assignment of an identifier(s). SAE will review requests for specific identifiers to determine that they do not conflict with an identifier already assigned or block of identifiers already reserved. SAE will confirm the assignments in writing to the requester. Once confirmed by SAE, the identifier need not be resubmitted to NHTSA.

(b) Manufacturers of vehicles subject to this part shall submit, either directly or through an agent, the unique identifier for each make and type of vehicle it manufactures at least 60 days before affixing the first VIN using the identifier. Manufacturers whose unique identifier appears in the fourth section of the VIN shall also submit the three characters of the first section that constitutes a part of their identifier.

(c) Manufacturers of vehicles subject to the requirements of this part shall submit to NHTSA the information necessary to decipher the characters contained in its VINs. Amendments to this information shall be submitted to the agency for VINs containing an amended coding. The agency will not routinely provide written approvals of these submissions, but will contact the manufacturer should any corrections to these submissions be necessary.

(d) The information required under paragraph (c) of this section shall be submitted at least 60 days prior to offering for sale the first vehicle identified by a VIN containing that information, or if information concerning vehicle characteristics sufficient to specify the VIN code is unavailable to the manufacturer by that date, then within one week after that information first becomes available. The information shall be addressed to: Administrator, National Highway Traffic Safety Administration, 400 Seventh Street, SW., Washington, DC 20590, Attention: VIN Coordinator.

PART 567—[AMENDED]

4. The authority citation for part 567 is revised to read as follows:

Authority: 49 U.S.C. 322, 30111, 30115, 30117, 30166, 32502, 32504, 33101–33014, and 33109; delegation of authority at 49 CFR 1.50.

5. In § 567.4, paragraphs (k) introductory text and (l) are revised to read as follows:

§ 567.4 Requirements for manufacturers of motor vehicles.

* * * * *

(k) In the case of passenger cars admitted to the United States under 49 CFR part 592 to which the label required by this section has not been affixed by the original producer or assembler of the passenger car, a label meeting the requirements of this paragraph shall be affixed by the importer before the vehicle is imported into the United States, if the car is from a line listed in Appendix A of 49 CFR Part 541. This label shall be in addition to, and not in place of, the label required by paragraphs (a) through (j), inclusive, of this section.

* * * * *

(l)(1) In the case of a passenger car imported into the United States under 49 CFR 591.5(f) which does not have an identification number that complies with 49 CFR 565.4 (b), (c), and (g) at the time of importation, the Registered Importer shall permanently affix a label to the vehicle in such a manner that, unless the label is riveted, it cannot be removed without being destroyed or defaced. The label shall be in addition to the label required by paragraph (a) of this section, and shall be affixed to the vehicle in a location specified in paragraph (c) of this section.

(2) The label shall contain the following statement, in the English language, lettered in block capitals and numerals not less than 4 mm high, with the location on the vehicle of the original manufacturer's identification number provided in the blank: ORIGINAL MANUFACTURER'S IDENTIFICATION NUMBER SUBSTITUTING FOR U.S. VIN IS LOCATED _____.

PART 571—[AMENDED]

6. The authority citation for part 571 continues to read as follows:

Authority: 49 U.S.C. 322, 30111, 30115, 30117, and 30166; delegation of authority at 49 CFR 1.50.

§ 571.115 [Removed and Reserved]

7. Section 571.115 is removed, and reserved.

Issued on: May 31, 1996.

Ricardo Martinez,

Administrator.

[FR Doc. 96–14241 Filed 6–6–96; 8:45 am]

BILLING CODE 4910–59–P

Surface Transportation Board

49 CFR Part 1039

[STB Ex Parte No. 550]

Removal of Obsolete Regulations Concerning Railroad Contracts

AGENCY: Surface Transportation Board.

ACTION: Final rule.

SUMMARY: The Surface Transportation Board (the Board) is removing from the Code of Federal Regulations obsolete regulations exempting non-agricultural railroad transportation contracts from the contract filing requirement that previously applied to railroad contracts.

EFFECTIVE DATE: January 1, 1996.

FOR FURTHER INFORMATION CONTACT: Beryl Gordon, (202) 927–5660. [TDD for the hearing impaired: (202) 927–5721.]

SUPPLEMENTARY INFORMATION: Effective January 1, 1996, the ICC Termination Act of 1995, Pub. L. No. 104–88, 109 Stat. 803 (ICCTA) abolished the Interstate Commerce Commission (ICC) and established the Board within the Department of Transportation. Section 204(a) of the ICCTA provides that ''[t]he Board shall promptly rescind all regulations established by the [ICC] that are based on provisions of law repealed and not substantively reenacted by this Act.''

Prior to the ICCTA, the ICC had issued regulations governing rail contracts in 49 CFR part 1313, which included provisions for filing all such contracts pursuant to former 49 U.S.C. 10713(b)(1). The ICC had later exempted rail carriers from the contract filing requirement, except where the contract was for the transportation of agricultural commodities.[1] *Railroad Transportation Contracts,* 8 I.C.C.2d 730 (1992). The regulations codifying this exemption were placed at 49 CFR 1039.23.[2]

The ICCTA changed the underlying law governing railroad transportation contracts, which is now located at 49 U.S.C. 10709, in several important respects. As pertinent here, it eliminates any regulation of non-agricultural contracts. Moreover, for agricultural contracts, new 49 U.S.C. 10709(d)(1) only requires a contract summary to be filed with the Board, and not the full contract.

In *Railroad Contracts,* STB Ex Parte No. 541 (STB served Mar. 26, 1996) (ANPR), published at 61 FR 13147, the Board issued an advance notice of proposed rulemaking soliciting comments from the transportation community as to appropriate regulations for administering new § 10709.[3] We noted that the regulations set forth at 49 CFR Part 1313 that implemented former § 10713 are not suitable for carrying out new § 10709. While we will soon be issuing proposed rules in response to comments responding to the ANPR, we see no need in the interim to continue the obsolete regulations in § 1039.23. Because there is no longer a statutory requirement for any contract filing, the exemption from filing contracts and contract amendments for non-agricultural commodities is unnecessary. Moreover, the statement in § 1039.23 that contracts must be filed for agricultural commodities is no longer true. We are therefore removing the now obsolete § 1039.23 regulations.

Because this action merely reflects, and is required by, the enactment of the ICCTA and will not have an adverse effect on the interests of any person, this action will be deemed to be effective as of January 1, 1996.

This action will not significantly affect either the quality of the human environment or the conservation of energy resources.

List of Subjects in 49 CFR Part 1039

Agricultural commodities, Intermodal transportation, Manufactured commodities, Railroads.

Decided: May 24, 1996.

By the Board, Chairman Morgan, Vice Chairman Simmons, and Commissioner Owen.

Vernon A. Williams,

Secretary.

For the reasons set forth in the preamble and under the authority of 49 U.S.C. 721(a), title 49, chapter X, Part 1039 of the Code of Federal Regulations is amended as set forth below:

PART 1039—EXEMPTIONS

1. The authority citation for part 1039 continues to read as follows:

Authority: 5 U.S.C. 553 and 49 U.S.C. 721 and 10502.

§ 1039.23 [Removed]

2. Section 1039.23 is removed.

[FR Doc. 96–14416 Filed 6–6–96; 8:45 am]

BILLING CODE 4915–00–P

[1] Rail carriers were still required to file contract summaries for all their transportation contracts.

[2] Minor changes were also made to part 1313.

[3] The comment date was extended to May 28, 1996.

Proposed Rules

Federal Register
Vol. 61, No. 111
Friday, June 7, 1996

This section of the FEDERAL REGISTER contains notices to the public of the proposed issuance of rules and regulations. The purpose of these notices is to give interested persons an opportunity to participate in the rule making prior to the adoption of the final rules.

DEPARTMENT OF TRANSPORTATION

Federal Aviation Administration

14 CFR Part 39

[Docket No. 96–NM–06–AD]

RIN 2120–AA64

Airworthiness Directives; Boeing Model 737–100 and –200 Series Airplanes

AGENCY: Federal Aviation Administration, DOT.

ACTION: Notice of proposed rulemaking (NPRM).

SUMMARY: This document proposes the adoption of a new airworthiness directive (AD) that is applicable to certain Boeing Model 737–100 and –200 series airplanes. This proposal would require replacement of the 250 volt-ampere (VA) rated static inverters with 410 or 500 VA rated static inverters, and an operational test of the standby electrical power system. This proposal is prompted by a report that accomplishment of a certain modification could result in overload of the static inverter on these airplanes. The actions specified by the proposed AD are intended to prevent overload of the static inverter, which could result in the loss of the 115 volt alternating current standby bus and the associated flight instruments when the airplane is operating on standby electrical power.

DATES: Comments must be received by July 19, 1996.

ADDRESSES: Submit comments in triplicate to the Federal Aviation Administration (FAA), Transport Airplane Directorate, ANM–103, Attention: Rules Docket No. 96–NM–06–AD, 1601 Lind Avenue, SW., Renton, Washington 98055–4056. Comments may be inspected at this location between 9:00 a.m. and 3:00 p.m., Monday through Friday, except Federal holidays.

The service information referenced in the proposed rule may be obtained from Boeing Commercial Airplane Group, P.O. Box 3707, Seattle, Washington 98124–2207. This information may be examined at the FAA, Transport Airplane Directorate, 1601 Lind Avenue, SW., Renton, Washington.

FOR FURTHER INFORMATION CONTACT: Stephen Oshiro, Aerospace Engineer, Systems and Equipment Branch, ANM–130S, FAA, Transport Airplane Directorate, Seattle Aircraft Certification Office, 1601 Lind Avenue, SW., Renton, Washington 98055–4056; telephone (206) 227–2793; fax (206) 227–1181.

SUPPLEMENTARY INFORMATION:

Comments Invited

Interested persons are invited to participate in the making of the proposed rule by submitting such written data, views, or arguments as they may desire. Communications shall identify the Rules Docket number and be submitted in triplicate to the address specified above. All communications received on or before the closing date for comments, specified above, will be considered before taking action on the proposed rule. The proposals contained in this notice may be changed in light of the comments received.

Comments are specifically invited on the overall regulatory, economic, environmental, and energy aspects of the proposed rule. All comments submitted will be available, both before and after the closing date for comments, in the Rules Docket for examination by interested persons. A report summarizing each FAA-public contact concerned with the substance of this proposal will be filed in the Rules Docket.

Commenters wishing the FAA to acknowledge receipt of their comments submitted in response to this notice must submit a self-addressed, stamped postcard on which the following statement is made: ''Comments to Docket Number 96–NM–06–AD.'' The postcard will be date stamped and returned to the commenter.

Availability of NPRMs

Any person may obtain a copy of this NPRM by submitting a request to the FAA, Transport Airplane Directorate, ANM–103, Attention: Rules Docket No. 96–NM–06–AD, 1601 Lind Avenue, SW., Renton, Washington 98055–4056.

Discussion

The FAA has received a report indicating that, during an engineering review of Revision 4 to Boeing Service Bulletin 737–24–1051 by the manufacturer, it was found that the effectivity listing of the original issue through Revision 4 of this service bulletin included some Boeing Model 737–100 and -200 series airplanes equipped with 250 volt-ampere (VA)-rated static inverters. That particular static inverter may overload on these airplanes if the modification described in these particular revisions of the service bulletin has been accomplished. The modification entails revising the power connections to the captain's instrument panel. Such an overload on the static inverters could result in the loss of the 115 VAC standby bus and the associated flight instruments when the airplane is operating on standby electric power. Loss of use of these components may adversely affect the handling characteristics of the airplane.

FAA's Conclusions

Based on the information obtained from the manufacturer's review, the FAA finds that static inverters rated at 410 VA or 500 VA can safely handle the increase in electrical loading of the 115 VAC standby bus when the modification specified in Service Bulletin 737–24–1051 (the original issue through Revision 4) is accomplished. Therefore, the FAA has determined that replacement of 250 VA-rated static inverters with 410 VA or 500 VA-rated static inverters will positively address the identified unsafe condition.

Explanation of Requirements of Proposed Rule

Since an unsafe condition has been identified that is likely to exist or develop on other products of this same type design, the proposed AD would require replacement of the 250 VA-rated static inverters with certain 410 or 500 VA-rated static inverters. This replacement would be required only on those airplanes on which the modification specified in the various revisions of Boeing Service Bulletin 737–24–1051 has been accomplished.

After accomplishment of the replacement, the proposed AD would also require performing an operational test of the standby electrical power system.

The proposed actions would be required to be accomplished in accordance with the Boeing 737 Airplane Maintenance Manual.

Cost Impact

There are approximately 51 Boeing Model 737–100 and -200 series airplanes of the affected design in the worldwide fleet. The FAA estimates that 1 airplane of U.S. registry would be affected by this proposed AD, that it would take approximately 2 work hours per airplane to accomplish the proposed actions, and that the average labor rate is $60 per work hour. Required parts would cost approximately $10,500 per airplane. Based on these figures, the cost impact of the proposed AD on U.S. operators is estimated to be $10,620.

The cost impact figure discussed above is based on assumptions that no operator has yet accomplished any of the proposed requirements of this AD action, and that no operator would accomplish those actions in the future if this AD were not adopted.

Regulatory Impact

The regulations proposed herein would not have substantial direct effects on the States, on the relationship between the national government and the States, or on the distribution of power and responsibilities among the various levels of government. Therefore, in accordance with Executive Order 12612, it is determined that this proposal would not have sufficient federalism implications to warrant the preparation of a Federalism Assessment.

For the reasons discussed above, I certify that this proposed regulation (1) is not a ''significant regulatory action'' under Executive Order 12866; (2) is not a ''significant rule'' under the DOT Regulatory Policies and Procedures (44 FR 11034, February 26, 1979); and (3) if promulgated, will not have a significant economic impact, positive or negative, on a substantial number of small entities under the criteria of the Regulatory Flexibility Act. A copy of the draft regulatory evaluation prepared for this action is contained in the Rules Docket. A copy of it may be obtained by contacting the Rules Docket at the location provided under the caption **ADDRESSES.**

List of Subjects in 14 CFR Part 39

Air transportation, Aircraft, Aviation safety, Safety.

The Proposed Amendment

Accordingly, pursuant to the authority delegated to me by the Administrator, the Federal Aviation Administration proposes to amend part 39 of the Federal Aviation Regulations (14 CFR part 39) as follows:

PART 39—AIRWORTHINESS DIRECTIVES

1. The authority citation for part 39 continues to read as follows:

Authority: 49 U.S.C. 106(g), 40113, 44701.

§ 39.13 [Amended]

2. Section 39.13 is amended by adding the following new airworthiness directive:

Boeing: Docket 96–NM–06–AD.

Applicability: Model 737–100 and –200 series airplanes; equipped with 250 volt-ampere (VA) rated static inverters; on which the modification specified in Boeing Service Bulletin 737–24–1051 (original issue, dated October 20, 1988; Revision 1, dated October 5, 1989; Revision 2, dated June 28, 1990; Revision 3, dated May 7, 1992; or Revision 4, dated December 21, 1995) has been accomplished; certificated in any category.

Note 1: This AD applies to each airplane identified in the preceding applicability provision, regardless of whether it has been otherwise modified, altered, or repaired in the area subject to the requirements of this AD. For airplanes that have been modified, altered, or repaired so that the performance of the requirements of this AD is affected, the owner/operator must request approval for an alternative method of compliance in accordance with paragraph (b) of this AD. The request should include an assessment of the effect of the modification, alteration, or repair on the unsafe condition addressed by this AD; and, if the unsafe condition has not been eliminated, the request should include specific proposed actions to address it.

Compliance: Required as indicated, unless accomplished previously.

To prevent overload of the static inverter, which could result in the loss of the 115 VAC standby power and the associated flight instruments, accomplish the following:

(a) Within 10 months after the effective date of this AD, replace the 250 VA rated static inverters either with 500 VA-rated static inverters having Boeing part number (P/N) 60B40023–2, or with 410 VA-rated static inverters having Jet Electronics and Technology P/N 3S2060DV109B1, in accordance with Section 20–10–111 of the Boeing 737 Airplane Maintenance Manual. Prior to further flight following the replacement, perform an operational test of the standby electrical power system in accordance with Section 24–54–0 of the Boeing 737 Airplane Maintenance Manual.

Note 2: Replacements and operational tests accomplished prior to the effective date of this amendment in accordance with Boeing Alert Service Bulletin 737–24A2113, dated February 29, 1996, are considered acceptable for compliance with this AD.

(b) An alternative method of compliance or adjustment of the compliance time that provides an acceptable level of safety may be used if approved by the Manager, Seattle Aircraft Certification Office (ACO), FAA, Transport Airplane Directorate. Operators shall submit their requests through an appropriate FAA Principal Maintenance Inspector, who may add comments and then send it to the Manager, Seattle ACO.

Note 3: Information concerning the existence of approved alternative methods of compliance with this AD, if any, may be obtained from the Seattle ACO.

(c) Special flight permits may be issued in accordance with sections 21.197 and 21.199 of the Federal Aviation Regulations (14 CFR 21.197 and 21.199) to operate the airplane to a location where the requirements of this AD can be accomplished.

Issued in Renton, Washington, on June 3, 1996.

Darrell M. Pederson,

Acting Manager, Transport Airplane Directorate, Aircraft Certification Service.

[FR Doc. 96–14384 Filed 6–6–96; 8:45 am]

BILLING CODE 4910–13–U

FEDERAL TRADE COMMISSION

16 CFR Part 419

Proposed Amendment of the Games of Chance Trade Regulation Rule

AGENCY: Federal Trade Commission.

ACTION: Notice of publication of the Final Staff Report, the Presiding Officer's Recommended Decision, and an invitation for comment on the two reports.

SUMMARY: On July 7, 1988, the Commission published in the Federal Register its Notice of Proposed Rulemaking for the proposed amendment of the Games of Chance in the Food Retailing and Gasoline Industries Trade Regulation Rule. The Federal Trade Commission's Presiding Officer has announced the publication of and release to the public for comment, the Final Staff Report and the recommended decision of the Presiding Officer in this rulemaking proceeding. The Final Staff Report contains the staff's analysis of the rulemaking record and its recommendations to the Commission as to amendment of the Rule. The Presiding Officer's recommended decision is contained in his report and is based upon his findings and conclusions as to all relevant and material evidence, taking into account the Final Staff Report. Interested persons and the public are invited to submit written comments on both reports. The Commission has not reviewed or adopted either report. The Commission's final determination in the matter will be based upon the entire rulemaking record, including comments received in response to this document.

DATES: Written comments will be received until August 6, 1996.

ADDRESSES: Written comments should be sent to Henry B. Cabell, Presiding Officer, Federal Trade Commission, 6th Street and Pennsylvania Avenue, NW., Washington, DC 20580.

A limited number of copies of the Presiding Officer's Report and of the Final Staff Report is available at the Public Reference Section, Room 130, Federal Trade Commission, 6th Street and Pennsylvania Avenue NW., Washington, DC 20580. Telephone: 202–326–2222.

FOR FURTHER INFORMATION CONTACT: Henry B. Cabell (Presiding Officer), 202–326–3642, or John M. Mendenhall, Assistant Regional Director, Cleveland Regional Office, 216–522–4210.

SUPPLEMENTARY INFORMATION: In a Notice of Proposed Rulemaking published in 53 FR 25503, July 7, 1988, the Commission announced the commencement of a proceeding to consider proposed amendments to the Games of Chance in the Food Retailing and Gasoline Industries Trade Regulation Rule, 16 CFR Part 419 (the Rule), and invited written comment on the proposed amendments. These comments were received, however, a public hearing was not held since none of the interested parties expressed a desire for one. The Final Staff Report and the Presiding Officer's Report, containing his recommended decision, have now been placed on the rulemaking record (Public Record No. 215–66). During the post record comment period which will end on August 6, 1996, the public, including persons interested in the proceeding, are invited to submit comments on both reports. Such comments should be confined to information already in the rulemaking record and submitted on 8½ by 11 inch paper. Those in excess of four pages should be accompanied by four copies.

Post record comments may include requests for review by the Commission of any rulings or other determinations made by the Presiding Officer and contain requests for an opportunity to make an oral presentation to the Commission pursuant to Commission Rule 1.13(i) (16 CFR 1.13(i)). The inclusion in comments of further evidence or factual material not presently in the rulemaking record may result in rejection of the comment as a whole.

The Commission has not yet reviewed the rulemaking record in this proceeding or determined the nature or extent of any action it may take with respect to the Rule. Any decision by the Commission in this matter will be based solely upon the contents of the rulemaking record, including the material submitted in response to this notice.

Publication of the Presiding Officer's Report and the Final Staff Report should not be interpreted as representing the views of the Commission or of any individual Commissioner.

List of Subjects in 16 CFR Part 453

Advertising, Foods, Gambling, Gasoline, Trade practices.

Henry B. Cabell,

Presiding Officer.

[FR Doc. 96–14293 Filed 6–6–96; 8:45 am]

BILLING CODE 6750–01–M

DEPARTMENT OF THE INTERIOR

Bureau of Indian Affairs

25 CFR Part 175

RIN 1076–AD45

Indian Electric Power Utilities

AGENCY: Bureau of Indian Affairs, Interior.

ACTION: Proposed rule.

SUMMARY: The regulations on Indian electric power utilities were identified for reinvention under the National Performance Review. This proposed revision is written in plain English to make the rule easier to read and understand for utility customers and operators.

DATES: Comments by interested parties must be in writing and we must receive them before August 6, 1996.

ADDRESSES: You must mail or hand carry your comments to Terrance Virden, Acting Director, Office of Trust Responsibilities, Bureau of Indian Affairs, Department of the Interior, 1849 C Street, N.W., MS 4513 MIB, Washington, D.C. 20240.

FOR FURTHER INFORMATION CONTACT: Ross Mooney, Chief, Branch of Irrigation and Power, Division of Water and Land Resources, Bureau of Indian Affairs, Department of the Interior, 1849 C Street, N.W., MS 4513 MIB, Washington, D.C. 20240, Phone Number (202)208–5480.

SUPPLEMENTARY INFORMATION: We are publishing this proposed rule by the authority delegated by the Secretary of the Interior to the Assistant Secretary—Indian Affairs by 209 DM 8.

Our policy is to give the public an opportunity to participate in the rule making process by submitting written comments regarding proposed rules. We will consider all comments received during the public comment period. We will determine necessary revisions and issue the final rule. Please refer to this preamble's **ADDRESSES** section for where you must submit your written comments on this proposed rule.

We certified to the Office of Management and Budget (OMB) that these proposed regulations meet the applicable standards provided in Sections 2(a) and 2(b)(2) of Executive Order 12778.

This rule is not a significant rule under Executive Order 12866 and does not require approval by the Office of Management and Budget.

This rule imposes no unfunded mandates on any governmental or private entity and is in compliance with the provisions of the Unfunded Mandates Act of 1995.

We determined this proposed rule:

(a) Does not constitute a major Federal action significantly affecting the human environment, and no detailed statement is needed under the National Environmental Policy Act of 1969;

(b) Does not have significant takings implications in accordance with Executive Order 12630; and

(c) Does not have significant Federalism effects.

(d) Does not have a significant economic impact on a substantial number of small entities under the Regulatory Flexibility Act (5 U.S.C. 601 *et seq.*).

Paperwork Reduction Act of 1995

Section 175.13(a) contains information collection requirements. As required by the Paperwork Reduction Act of 1995 (44 U.S.C. 3507(d)), the Bureau of Indian Affairs has submitted a copy of this section to the Office of Management and Budget (OMB) for its review.

We need to know the customer's name, address, phone number, social security number, the kind of service desired, and where the service is needed.

All information is collected when applying for electric service. Reporting and record keeping burden for this collection of information is estimated to average 15 minutes for each response, including time for gathering and maintaining data and completing and reviewing the collection of information. The total reporting and record keeping burden for this collection is estimated to be less than 1188 hours per year.

Organizations and individuals wishing to submit comments on the information collection requirement should direct them to the Office of Information and Regulatory Affairs, OMB, Room 10202, New Executive Office Building, Washington, D.C.

20503; Attention Desk Officer for U.S. Department of the Interior.

The Bureau of Indian Affairs considers comments by the public on this proposed collection of information in:

Evaluating whether the proposed collection of information is necessary for the proper performance of the functions of the Bureau, including whether the information will have practical utility;

Enhancing the quality, usefulness, and clarity of the information to be collected; and

Minimizing the burden of the collection of information on those who are to respond, including through the use of appropriate collection techniques or other form of information technology.

OMB is required to make a decision concerning the collection of information contained in these proposed regulations between 30 and 60 days after publication of this document in the Federal Register. Therefore, a comment to the OMB is best assured of having its full affect if OMB receives it within 30 days of publication. This does not affect the deadline for the public to comment to the Bureau of Indian Affairs on the proposed rule.

List of Subjects in 25 CFR Part 175

Indian-lands, Irrigation.

For the reasons set out in the preamble, we propose to revise Part 175 of Title 25 of the Code of Federal Regulations, as follows:

PART 175—INDIAN ELECTRIC POWER UTILITIES

Subpart A—General Provisions

Sec.
175.01 Definitions
175.02 Does this part apply to you?
175.03 Do you need to comply?
175.04 Information Collection.

Subpart B—How do we operate a power facility?

175.10 We prepare a manual to tell you how we operate.
175.11 What are our responsibilities?
175.12 What are our employees' responsibilities?
175.13 What are your responsibilities?
175.14 How can you lose your electric service?

Subpart C—What Does It Cost Us To Operate A Power Facility?

175.20 What will we bill you for?

Subpart D—How do we pay for Operating a Power Facility?

175.30 What do your power bills pay for?
175.31 We charge service fees.
175.32 We charge electric power rates.
175.33 We charge to recover costs of purchased power for resale to you.
175.34 How we notify you?
175.35 How do we bill you?
175.36 How do you pay us?

Subpart E—How do we Extend or Upgrade Your Power System?

175.40 When do we extend or upgrade your power system?
175.41 You can pay for system extension or upgrades.
175.42 You may receive a refund of your construction costs.
175.43 We need a right-of-way for your system.

Subpart F—If you do not Agree with our Actions.

175.50 You may appeal to us.
175.51 You may appeal to the Interior Board of Indian Appeals.
175.52 While your appeal is pending.

Authority: 5 U.S.C. 301; sec. 2, 49 Stat. 1039–1040; 54 Stat. 422; sec. 5, 43 Stat. 475–476; 45 Stat. 210–211; and sec. 7, 62 Stat. 273.

Subpart A—General Provisions

§ 175.01 Definitions.

Appellant means any person who files an appeal under this part.

Customer means any individual, business, or government entity to whom we provide the services of a utility or who seeks to have us provide the services of a utility.

Customer Service means the assistance or service we provide to customers, other than the actual delivery of electric power or energy, including, but not limited to, such items as: line extension, system upgrade, meter testing, connection or disconnection, special meter reading, or other assistance or service as provided for in the operations manual.

Electric Power Utility or Utility means that program administered by the Bureau of Indian Affairs which provides for the marketing of electric power or energy.

Electric Service means the delivery of electric energy or power by the utility to the point of delivery pursuant to execution of a service agreement or special contract as provided for in the operations manual.

Inventory valuation means our accounting procedures for fixing the costs for supplies we hold in inventory.

Operations Manual means the utility's written compilation of its procedures and practices which govern service the utility provides.

Power Rates means the charges we establish in a rate schedule(s) for electric service we provide to a customer.

Purchased Power means power or energy we buy from another power marketing organization for resale to our customers.

Service means electric service and customer service which we provide.

Service Agreement means the written form provided by the utility which constitutes a binding agreement between the customer and the utility for service except for service which the utility provides to the customer under a special contract.

Service Fees means charges for providing administrative or customer service to customers, prospective customers, and other entities having business relationships with the utility.

Service Life means the period of time we can expect performance to design standards from a plant or capitalized equipment.

Special Contract means a written agreement between the utility and a customer for special conditions of service.

Utility office(s) means the current or future facility or facilities which the utility uses for conducting general business with customers.

We means the United States Government, the Department of the Interior, the Secretary, the Bureau of Indian Affairs, and all who are authorized to represent us in matters covered under this part.

You means a customer of a Bureau of Indian Affairs power utility.

§ 175.02 Does this part apply to you?

The purpose of this part is to regulate the electric power utilities administered by the Bureau of Indian Affairs.

§ 175.03 Do you need to comply?

All utilities and customers of utilities administered by the Bureau of Indian Affairs are bound by this part.

§ 175.04 Information collection.

The information collection requirements contained in § 175.13(a) will be approved by the Office of Management and Budget as required by 44 U.S.C. 3501 et seq. We collect this information to provide you the appropriate electric power service and an accurate bill. You must provide this information to obtain electric power service.

Subpart B—How Do We Operate a Power Facility?

§ 175.10 We prepare a manual to tell you how we operate.

We will establish an operations manual to administer the utility consistent with this part and all applicable laws and regulations. We will amend the operations manual as needed.

(a) We will notify you of changes we propose to make to the operations

manual. We will notify you of a proposed action to establish or amend the operations manual at least 30 days before the effective date of the proposed action so that you may comment on our proposed action. We will publish notices of the proposed action in the Federal Register. The notice will give you:

(1) A brief description of the proposed action;

(2) The effective date of the proposed action;

(3) The name, address and telephone number of the person you should contact if you have comments or questions; and

(4) The period of time you have to submit your comments or views of the proposed action.

(b) We will consider your comments. We will consider your comments before we establish or amend the operations manual. We will notify you of any decisions we make finalizing the operations manual and we will provide an explanation of how we made the decisions in the notice.

§ 175.11 What are our responsibilities?

We must:

(a) Provide you with reliable energy. We will define the specific types of service and limitations on our service in our operations manual.

(b) Construct and operate facilities in accordance with accepted industry practice.

(c) Exercise reasonable care in protecting your equipment and property.

(d) Comply with additional requirements we define in the operations manual.

(e) Read your meters or authorize you to read your meters at intervals prescribed in the operations manual, service agreement, or special contract, except where we cannot read the meter due to conditions described in the operations manual.

(f) Get your permission to operate or handle your equipment, except to eliminate what, in our judgment, is an unsafe condition.

(g) Prevent the unauthorized use of electricity.

§ 175.12 What are our employees—responsibilities?

Our employees are forbidden to accept any personal compensation from you or any payment for services related to their employment by the utility.

§ 175.13 What are your responsibilities?

You must:

(a) Enter into a written service agreement or special contract with us to obtain electrical power services.

(b) Install and operate your equipment in compliance with the National Electrical Manufacturers Association Standards and/or the National Electrical Code of the National Board of Fire Underwriters for Electric Wiring and Apparatus as they apply to you.

(c) Pay all your financial obligations resulting from your receiving utility service.

(d) Comply with additional requirements we may define in the operations manual.

(e) Prevent unauthorized use of electricity.

(f) Not install or use equipment which will adversely affect the utility system or other customers of the utility.

§ 175.14 How can you lose your electric service?

We may discontinue your service if you do not comply with our requirements as stated in this part and in the operations manual. We will define our procedures for discontinuing your service in the operations manual.

Subpart C—What Does It Cost To Operate a Power Facility?

§ 175.20 What will we bill you for?

(a) We will bill you for the following three types of costs:

(1) *Service fees* are for services we provide to you that are not power consumption; i.e., you apply for electricity where there are no poles and wires, we charge you the cost of installing the poles and wire.

(2) *Electric power rate* is the cost of power we provide to you; i.e., your meter reading.

(3) *Purchased power costs* are the costs of power we buy for resale to you.

(b) We will compute our costs to operate a power facility as the total marginal costs for: power generation, power transmission, power distribution, operation and maintenance, debt servicing, capital improvements, minus miscellaneous revenues.

(c) We will compute our inventory valuation based on a last in—first out (LIFO) depreciation method and we will depreciate our plants and capital equipment by applying straight line depreciation over the service life of the plant or equipment. We will include plant and equipment service life tables in the operations manual.

Subpart D—How Do We Pay for Operating a Power Utility?

§ 175.30 What do your power bills pay for?

The Act of August 7, 1946 (60 Stat. 895), as amended by the Act of August 31, 1951 (65 Stat. 254) provides that we collect revenues from power operations to:

(a) Pay our expenses for operating and maintaining the utility.

(b) Create and maintain reserve funds to be available so that we can:

(1) Make repairs and replacements to the utility;

(2) Defray emergency expenses for the utility;

(3) Ensure the continuous operation of the utility.

(c) Amortize construction costs allocated to be returned from power revenues, in accordance with the repayment provisions of the applicable statutes or contracts.

(d) Pay other expenses and obligations chargeable to power revenues to the extent required or permitted by law.

§ 175.31 We charge service fees.

Annually we will unilaterally establish service fees to recover our expenses for providing services to you. We will publish a schedule of the service fees and the effective date in the Federal Register, as provided in § 175.34. Our decision on the amount of the service fees is final. The fees will remain in effect until we amend them.

§ 175.32 We charge electric power rates.

Annually we will review the rates we charge for electric power or energy. We will use the annual review to decide if the revenues we collect are sufficient to pay for our costs defined under § 175.30. If our current rates and fees are not sufficient to cover our costs, we will conduct further studies to determine whether we should adjust the rates and to prepare rate schedules which will return sufficient revenues. If we decide we must adjust the rates we charge, we will inform you. We will publish a notice of the rate increase in the Federal Register, as provided in § 175.34.

§ 175.33 We charge to recover costs of purchased power for resale to you.

When the cost we pay for purchased power or energy changes, we will compute how much it changes the cost for services we provide to you and we will adjust the power rates accordingly. When we decide we must adjust the rates we charge, we will inform you. We will publish a notice of the rate increase in the Federal Register, as provided in § 175.34.

§ 175.34 How we notify you.

(a) If we decide we must adjust the rates or fees we charge, we will inform you of the proposed adjustments. We will publish in the Federal Register a notice of the proposed change. The notice will give you:

(1) A description of the proposed action;

(2) The name, address, and telephone number of the person you should contact if you have comments or questions; and

(3) The period of time you have to submit your comments or views of the proposed action.

(b) You may comment on our proposed changes. You may submit written statements to us. We will incorporate your statements into our record.

(c) We will consider your comments. We will consider all your written statements before we finalize the proposed changes. We will decide any issues you raise concerning the proposed changes. We will notify you of our decisions and provide you an explanation of how we made the decisions through a notice which we will publish in the Federal Register. The changes will remain in effect until we make further adjustments using these same procedures.

§ 175.35 How do we bill you?

(a) Metered customers—We will compute your bills using the published rate schedules. We will bill you monthly unless you have a special contract with different billing arrangements. We will measure your power or energy demand using the register on the meter at your point of delivery. We will estimate your power or energy demand if: your meter has failed; the seal on your meter is broken; or our employees cannot read the meter registrations. We will base our estimate on the pattern of your prior power consumption or on an estimate of your electric load if you have no billing history with us.

(b) Unmetered customers—We will bill you according to the provisions of your special contract.

(c) Service fee billing—We will send you a special bill for other services we provide you.

§ 175.36 How do you pay us?

(a) You may pay us in person or you may mail your payment to the utility office which we designate in our operations manual. We may refuse for cause to accept personal checks for payment of bills.

(b) What if your check bounces? We will try to collect payment from you if your bank returns your check due to insufficient funds or other cause. We will assess interest, penalties and administrative charges for each delinquent account and collection action we take other than court proceedings. We will consider your account to be delinquent if you do not redeem your check and we may discontinue your service. We will accept only cash, a cashier's check, or a money order to cover an unredeemed check and associated charges.

Subpart E—How Do We Extend or Upgrade Your Power System?

§ 175.40 When do we extend or upgrade your power system?

We may extend or upgrade a power system to serve new or increased loads.

§ 175.41 You can pay for system extensions or upgrades.

You may contract with us to finance the construction necessary to extend or upgrade the power system if the construction would not be adverse to the interest of the utility. We must approve your construction plans and specifications, any items you furnish, or construction you perform. You may also:

(a) Furnish materials or equipment for an extension or upgrade to the system;

(b) Install materials or equipment for an extension or upgrade to the system; or

(c) Pay us to install materials or equipment for an extension or upgrade to the system.

§ 175.42 You may receive a refund of your construction costs.

We may refund all or part of your payment for construction costs. If we do this, we will stipulate the arrangements for your refund in a special contract. We will consider refunding your costs if:

(a) Additional customers are later served by your extension or upgrade; or

(b) We determine that the service will provide substantial economic benefits to the utility as a whole.

§ 175.43 We need a right of way for your system.

You are responsible for obtaining the rights of way necessary for us to furnish services to you where there is no existing right(s) of way for our facilities. All rights of way, material, or equipment you furnish or install will be our property.

Subpart F—If You Do Not Agree With Our Actions

§ 175.50 You may appeal to us.

(a) If you feel any of our actions or decisions adversely affect you, you may file a notice of appeal with us within 30 days of our action. You must submit the notice of appeal in writing and clearly identify the decision which you are appealing. We will grant no extension of time for filing a notice of appeal. We will list the address where appeals must be sent in the operations manual.

(b) Within 30 days after you file a notice of appeal, you must file a statement with us which lists the reasons for your appeal. In the statement you must explain why you believe the decision under appeal is wrong and you must include your arguments and any supporting documentation. You may file the statement of reason(s) at the same time as the notice of appeal. We may summarily dismiss your appeal if you do not file a statement of reason(s).

(c) You must deliver your documents to us or ensure they are received in the facility officially designated for receipt of mail addressed to us.

(d) Within 30 days of your filing your statement of reasons, we will:

(1) Decide your appeal in writing; or

(2) Refer your appeal to the Office of Hearings and Appeals Board of Indian Appeals for a decision.

§ 175.51 You may appeal to the Interior Board of Indian Appeals.

(a) You may file an appeal of any decision with the Office of Hearings and Appeals Board of Indian Appeals if:

(1) We do not decide your appeal within 30 days of your filing your statement of reasons; or

(2) You do not agree with our decision regarding an action you appealed to us.

(b) We will list the address for the Office of Hearings and Appeals Board of Indian Appeals in the operations manual.

(c) To file your appeal with the Office of Hearings and Appeals Board of Indian Appeals, you must follow the provision of 43 CFR, part 4, subpart D, except that you must file a notice of appeal from a decision under §§ 175.31 and 175.33 within 30 days of publication of the decision. If the Office of Hearings and Appeals Board of Indian Appeals does not receive an appeal within the time frames defined in 43 CFR part 4, subpart D, our decision will be final.

(d) If we refer your appeal to the Office of Hearings and Appeals Board of Indian Appeals rather than deciding the appeal ourself, we will make the referral.

§ 175.52 While your appeal is pending

If your appeal involves:

(a) Our discontinuing your service, we do not have to resume your service during the appeal process unless you meet our requirements.

(b) The amount of a bill and you have paid the bill, we will acknowledge that you have paid the bill under protest until the final decision on your appeal is rendered.

(c) The amount of a bill and you have not paid the bill and the final decision on the appeal requires you to pay the bill, we will consider your bill to be a delinquent account subject to interest, penalties, and administrative charges, as required by the Federal Claims Collection Act of 1966, as amended, 31 U.S.C. 3717.

(d) An electric power rate, we will implement the rate and it will remain in effect subject to the final decision on the appeal.

Dated: May 8, 1996.

Ada E. Deer,

Assistant Secretary—Indian Affairs.

[FR Doc. 96–14062 Filed 6–6–96; 8:45 am]

BILLING CODE 4310–02–P

---

25 CFR Part 290

RIN: 1076–AD14

Tribal Revenue Allocation Plans

AGENCY: Bureau of Indian Affairs, Interior.

ACTION: Proposed rule.

SUMMARY: The Bureau of Indian Affairs is proposing to establish regulations to implement Section 11(b)(3)(B) of the Indian Gaming Regulatory Act (IGRA), 25 U.S.C. 2701. This proposed rule establishes procedures for the submission, review and, approval of tribal revenue allocation plans for the distribution of net gaming revenues from tribal gaming activities.

DATES: Comments must be received on or before August 6, 1996.

ADDRESSES: Mail comments to George Skibine, Director, Indian Gaming Management Staff Office, Bureau of Indian Affairs, 1849 C Street, NW., MS 2070–MIB, Washington, DC 20240. Comments may be hand delivered to the same address from 9:00 a.m. to 4:00 p.m. Monday through Friday or sent by facsimile to 202–273–3153.

FOR FURTHER INFORMATION CONTACT: Nancy Pierskalla, Management Analyst, Indian Gaming Management Staff Office, at 202–219–4068.

SUPPLEMENTARY INFORMATION: The Indian Gaming Regulatory Act (IGRA), 25 U.S.C. 2701 *et seq.*, was signed into law on October 17, 1988. Pursuant to Section 11 (b)(3)(B), 25 U.S.C. 2710, of the IGRA, the Secretary of the Interior (Secretary) is charged with the review and approval of tribal revenue allocation plans relating to the distribution of net gaming revenues from a tribal gaming activity. These regulations establish a method for the submission, review and approval of tribal revenue allocation plans.

The IGRA provides that net gaming revenues from Class II and Class III gaming may be distributed in the form of per capita payments to members of the Indian tribe provided the Indian tribe has prepared a Tribal Revenue Allocation Plan which is approved by the Secretary. On December 19, 1992 the Assistant Secretary—Indian Affairs (AS–IA) issued Guidelines to govern the review and approval of Tribal Revenue Allocation Plans. As outlined in the IGRA, the Guidelines require that the Indian tribe must dedicate a significant source of net gaming revenue for economic and governmental purposes, that the interests of minors and other legally incompetent persons entitled to receive per capita payments must be protected and preserved, and that per capita payments are subject to federal income taxes. The Assistant Secretary does not mandate the distribution of net gaming revenues to individual tribal members. However, it is essential that Indian tribes choosing to make per capita payments comply with the requirements of the IGRA.

Public Participation Statement

Publication of the proposed rule by the Department of the Interior (Department) provides the public an opportunity to participate in the rulemaking process. Interested persons may submit written comments regarding the proposed rule to the location identified in the **ADDRESSES** section of this document.

Executive Order 12778

The Department has certified to the Office of Management and Budget (OMB) that these proposed regulations meet the applicable standards provided in sections 2(a) and 2(b)(2) of Executive Order 12778.

Executive Order 12866

This proposed rule is not a significant regulatory action under Executive Order 12866 and has been reviewed by the Office of Management and Budget.

Regulatory Flexibility Act

This proposed rule will not have a significant economic impact on a substantial number of small entities under the Regulatory Flexibility Act (5 U.S.C. 601 *et seq.*).

Executive Order 12630

The Department has determined that this proposed rule does not have ''significant takings'' implications. The proposed rule does not pertain to ''taking'' of private property interests, nor does it impact private property.

Executive Order 12612

The Department has determined that this proposed rule does not have significant federalism effects because it pertains solely to Federal-tribal relations and will not interfere with the roles, rights and responsibilities of states.

NEPA Statement

The Department has determined that this proposed rule does not constitute a major Federal action significantly affecting the quality of the human environment and that no detailed statement is required pursuant to the National Environmental Policy Act of 1969.

Paperwork Reduction Act of 1995

Sections 290.11, 290.18 and 290.27 contain information collection requirements. As required by the Paperwork Reduction Act of 1995 (44 U.S.C. 3507(d)), the Department of the Interior has submitted a copy of these sections to the Office of Management and Budget (OMB) for its review.

Collection of Information: Indian tribes may distribute net gaming revenues in the form of per capita payments provided the tribe has an approved Tribal Revenue Allocation Plan that has been submitted and reviewed in accordance with these regulations. The information to be collected includes: assurances to meet certain statutory requirements; a breakdown of the specific uses to which net gaming revenues will be allocated, eligibility requirements for participation, tax liability notification and the assurance of the protection and preservation of the per capita shares minors and legal incompetents. The information is needed to assure that net gaming revenues are used (1) to fund tribal government operations and programs, (2) to provide for the general welfare of the Indian tribe and its members, (3) to promote tribal economic development, (4) to donate to charitable organizations, and (5) to fund operations of local government agencies.

All information is to be collected upon the submission by an Indian tribe of a tribal revenue allocation plan or any amendments thereto for approval. Annual reporting and recordkeeping burden for this collection of information is estimated to average 75–100 hours for each response for 225 respondents, including the time for reviewing instructions, searching existing data sources, gathering and maintaining the data needed and completing and reviewing the collection of information. Thus, the total annual reporting and recordkeeping burden for this collection is estimated to be 22,500 hours.

Organizations and individuals desiring to submit comments on the information collection requirement should direct them to the Office of Information and Regulatory Affairs, OMB, Room 10202, New Executive Office Building, Washington, D.C. 20503; Attention: Desk Officer for the U.S. Department of the Interior.

The Department considers comments by the public on this proposed collection of information in—

Evaluating whether the proposed collection of information is necessary for the proper performance of the functions of the Department, including whether the information will have practical utility;

Evaluating the accuracy of the Department's estimate of the burden of the proposed collection of information, including the validity of the methodology and assumptions used;

Enhancing the quality, usefulness, and clarity of the information to be collected; and

Minimizing the burden of the collection of information on those who are to respond, including through the use of appropriate automated, electronic, mechanical, or other collection techniques or other forms of information technology.

OMB is required to make a decision concerning the collection of information contained in these proposed regulations between 30 and 60 days after publication of this document in the Federal Register. Therefore, a comment to the OMB is best assured of having its full effect if OMB receives it within 30 days of publication. This does not affect the deadline for the public to comment to the Bureau of Indian Affairs on the proposed regulations.

Unfunded Mandates Act of 1995

This rule imposes no unfunded mandates on any governmental or private entity and is in compliance with the provisions of the Unfunded Mandates Act of 1995.

Drafting Information

The primary author of this document is Nancy Pierskalla, Management Analyst, Bureau of Indian Affairs, Department of the Interior.

List of Subjects in 25 CFR Part 290

Indians—business and finance, Indians—gaming.

For the reasons given in the preamble, Part 290 of Title 25, Chapter I of the Code of Federal Regulations is proposed to be added as set forth below.

PART 290—TRIBAL REVENUE ALLOCATION PLANS

Sec.

290.1 Purpose.
290.2 Definitions.
290.3 What will the Secretary approve?
290.4 What is a tribal revenue allocation plan?
290.5 Who must submit a tribal revenue allocation plan?
290.6 Must an Indian tribe have a tribal revenue allocation plan if it is not making per capita payments?
290.7 Do Indian tribes have to make per capita payments from net gaming revenues to tribal members?
290.8 How may an Indian tribe use net gaming revenues if it does not have an approved tribal revenue allocation plan?
290.9 Is an Indian tribe in violation of IGRA if it makes per capita payments to members without an approved tribal revenue allocation plan?
290.10 May an Indian tribe distribute per capita payments from net gaming revenues derived from either Class II or Class III gaming without a tribal revenue allocation plan?
290.11 What information must the tribal revenue allocation plan contain?
290.12 Under what conditions may an Indian tribe distribute per capita payments?
290.13 How must an Indian tribe divide or allocate per capita funds?
290.14 Who can share in a per capita payment?
290.15 How does an Indian tribe disburse the per capita shares of minors and legal incompetents?
290.16 Must the Indian tribe establish trust accounts with financial institutions for minors and legal incompetents?
290.17 Can the per capita payments of minors and legal incompetents be deposited into Bureau of Indian Affairs Individual Indian Monies (IIM) Accounts?
290.18 What documents must the Indian tribe include with the tribal revenue allocation plan?
290.19 Where should the Indian tribe submit the tribal revenue allocation plan?
290.20 What action must the Appropriate Bureau Official take?
290.21 How long will the review by the Appropriate Bureau Official take?
290.22 What action will the Appropriate Bureau Official take if the plan cannot be approved?
290.23 May an Indian tribe appeal the Appropriate Bureau Official's decision?
290.24 What happens if an Indian tribe makes per capita payments without an approved tribal revenue allocation plan?
290.25 How does the Indian tribe assure compliance with its tribal revenue allocation plan?
290.26 How does the Indian tribe resolve disputes arising from per capita distributions?
290.27 Do changes/amendments to a tribal revenue allocation plan require approval?
290.28 What is the liability of the United States under this part?

Authority: 5 U.S.C. 301, 25 U.S.C. 2 , 9 and 2710.

§ 290.1 Purpose.

This part contains procedures for submitting, reviewing and approving tribal revenue allocation plans for distributing net gaming revenues from tribal gaming activities. It applies to review of tribal revenue allocation plans adopted under the IGRA.

§ 290.2 Definitions.

Appropriate Bureau Official means the Bureau Official with delegated authority to approve tribal revenue allocation plans.

IGRA means the Indian Gaming Regulatory Act of 1988 (Public Law 100–497) 102 Stat. 2467 dated October 17, 1988 (Codified at 25 U.S.C. 2701–21 (1988)) and any amendments.

Indian Tribe means any Indian Tribe, Band, Nation, or other organized group or community of Indians that the Secretary recognizes as

(1) Eligible for the special programs and services provided by the United States to Indians because of their status as Indians, and

(2) Having powers of self-government.

Legal incompetent is an individual beneficiary eligible to participate in a per capita payment and who has been declared to be under a legal disability, other than being a minor, by a court of competent jurisdiction, including tribal justice systems.

Member of an Indian tribe means

(1) An individual who meets the membership requirements of the tribe as set forth in its governing document or

(2) Absent such a document, has been recognized as a member by the tribal governing body, and has consistently maintained tribal relations with the tribe or is listed on the tribal rolls of that tribe as a member, if such rolls are kept.

Minor is an individual beneficiary who is eligible to participate in a per capita payment and who has not reached the age of eighteen (18) years.

Per capita means any payment made to all members of the tribe, or, to identified groups of members, pursuant to the per capita provisions of a tribal revenue allocation plan.

Resolution means the formal document in which the tribal governing body expresses its legislative will in accordance with its governing document. In the absence of an governing document, a written expression adopted by the tribal governing body will be acceptable.

Secretary means the Secretary of the Interior or his authorized representative.

Superintendent means the official or other designated representative of the Bureau of Indian Affairs in charge of the field office which has immediate administrative responsibility for the affairs of the tribe, band, or group for which a tribal revenue allocation plan is prepared.

Tribal Governing Body means the governing body of an Indian tribe recognized by the Secretary.

Tribal Revenue Allocation Plan means the document submitted by an Indian tribe that provides for distributing net gaming revenues.

You and your means the Indian tribe.

§ 290.3 What will the Secretary approve?

The Secretary will review and approve tribal revenue allocation plans for compliance with IGRA.

§ 290.4 What is a tribal revenue allocation plan?

It is the document you must submit that describes how you will allocate net gaming revenues.

§ 290.5 Who must submit a tribal revenue allocation plan?

Any Indian tribe that intends to make a per capita payment from net gaming revenues.

§ 290.6 Must an Indian tribe have a tribal revenue allocation plan if it is not making per capita payments?

No, if you do not make per capita payments, you do not need to submit a tribal revenue allocation plan.

§ 290.7 Do Indian tribes have to make per capita payments from net gaming revenues to tribal members?

No. You do not have to make per capita payments.

§ 290.8 How may an Indian tribe use net gaming revenues if it does not have an approved tribal revenue allocation plan?

Without an approved tribal revenue allocation plan, you may only use net gaming revenues to fund tribal government operations or programs; to provide for the general welfare of your tribe and its members; to promote tribal economic development; to donate to charitable organizations; or to help fund operations of local government agencies.

§ 290.9 Is an Indian tribe in violation of IGRA if it makes per capita payments to members without an approved tribal revenue allocation plan?

Yes, you are in violation of IGRA. If you refuse to comply, the Department of Justice may enforce the per capita requirements of IGRA.

§ 290.10 May an Indian tribe distribute per capita payments from net revenues derived from either Class II and Class III without a tribal revenue allocation plan?

No, IGRA requires that you have an approved tribal revenue allocation plan.

§ 290.11 What information must the tribal revenue allocation plan contain?

(a) You must prepare a tribal revenue allocation plan that includes a percentage breakdown of the uses for which you will allocate net gaming revenues. The percentage breakdown must total one-hundred percent (100%).

(b) The tribal revenue allocation plan must meet the following criteria:

(1) It must ensure that not more than fifty percent (50%) of the net gaming revenues be used for per capita payments to members.

(2) It must reserve a significant portion of net gaming revenues from the tribal gaming activity for the following purposes:

(i) To fund tribal government operations or programs;

(ii) To provide for the general welfare of the tribe or its members;

(iii) To promote tribal economic development;

(iv) To donate to charitable organizations; or

(v) To help fund operations of local government.

(3) It must contain sufficient information, for review by the Secretary as required by IGRA, in particular regarding funding for tribal governmental operations or programs and for promoting tribal economic development.

(4) It must protect and preserve the interests of minors and other legally incompetent persons entitled to receive per capita payments. It must also ensure that per capita payments due to a minor or incompetent are given to the parents or legal guardian of these minors or incompetents in amounts necessary for the health, education or welfare of the minor or incompetent.

(5) It must describe how you will notify members of the tax liability of the per capita payments and how you will withhold taxes for all recipients in accordance with Internal Revenue Service regulations contained in 26 CFR part 31.

(6) It must authorize the distribution of per capita payments to members according to specific eligibility requirements and establish a process for dispute resolution.

§ 290.12 Under what conditions may an Indian tribe distribute per capita payments?

You may make per capita payments only after the Secretary approves your tribal revenue allocation plan.

§ 290.13 How must an Indian tribe divide or allocate per capita funds?

You must divide all per capita funds equally among the members of your tribe, or to the identified groups of members eligible to participate.

§ 290.14 Who can share in a per capita payment?

(a) You must establish your own criteria for determining whether all members or identified groups of members are eligible for per capita payments.

(b) If the tribal revenue allocation plan calls for distributing per capita payments to an identified group of members rather than to all members, you must justify limiting this payment to the identified group of members. You must make sure that:

(1) The distinction between members eligible to receive payments and members ineligible to receive payments is reasonable and not arbitrary;

(2) The distinction does not discriminate or otherwise violate the Indian Civil Rights Act;

(3) The justification complies with your governing document.

§ 290.15 How does an Indian tribe disburse the per capita shares of minors and legal incompetents?

You must prescribe the conditions for disbursing funds under the tribal revenue allocation plan to the parents or legal guardian of a minor or legal incompetent.

§ 290.16 Must the Indian tribe establish trust accounts with financial institutions for minors and legal incompetents?

No, but you must ensure that the shares allocated to minors and legal incompetents are protected and preserved and that the funds are given to parents or legal guardian in sufficient amounts necessary for the health, education, or welfare of the minor or legal incompetent.

§ 290.17 Can the per capita payments of minors and legal incompetents be deposited into Bureau of Indian Affairs Individual Indian Monies (IIM) Accounts?

No. You may not use IIM accounts. The Secretary will not accept voluntary deposits to IIM accounts.

§ 290.18 What documents must the Indian tribe include with the tribal revenue allocation plan?

You must include:

(a) A written request for approval of the tribal revenue allocation plan; and

(b) A tribal resolution or other document, including the date and place of adoption and the result of any vote taken, that certifies you have adopted

the tribal revenue allocation plan according to your governing document.

§ 290.19 Where should the Indian tribe submit the tribal revenue allocation plan?

You must submit your tribal revenue allocation plan to your respective Superintendent. The Superintendent will review the tribal revenue allocation plan to make sure it has been properly adopted and contains all information needed. The Superintendent will then transmit the tribal revenue allocation plan promptly to the Appropriate Bureau Official.

§ 290.20 What action must the Appropriate Bureau Official take?

The Appropriate Bureau Official must approve any tribal revenue allocation plan that is sufficiently detailed to allow the Appropriate Bureau Official to determine that it complies with § 290.11 and the IGRA.

§ 290.21 How long will the review by the Appropriate Bureau Official take?

(a) Within 90 days after the Appropriate Bureau Official receives the tribal revenue allocation plan, or such shorter time as may be provided in the tribes' governing documents approved by the Secretary, the Appropriate Bureau Official must review and approve the tribal revenue allocation plan if it conforms with this part and the IGRA.

(b) If the tribal revenue allocation plan does not conform to the requirements of IGRA or this part, the Appropriate Bureau Official will send you a written notice within the time periods set forth in paragraph (a) of this section. The notice will explain why the tribal revenue allocation plan does not comply with this part or the IGRA and tell you how to bring it into compliance.

§ 290.22 What action will the Appropriate Bureau Official take if the tribal revenue allocation plan cannot be approved?

The Appropriate Bureau Official will not approve any tribal revenue allocation plan for distribution of net gaming revenues from a tribal gaming activity if:

(a) The tribal revenue allocation plan is inadequate, particularly with respect to the requirements described in § 290.11 and IGRA, and you fail to bring it into compliance; or

(b) The tribal revenue allocation plan is not adopted in compliance with your governing documents; or

(c) The tribal revenue allocation plan does not include a reasonable justification for limiting per capita payments to certain groups of members; or

(d) The tribal revenue allocation plan violates the Indian Civil Rights Act of 1968, any other provision of Federal law, or the United States' trust obligations.

§ 290.23 May an Indian tribe appeal the Appropriate Bureau Official's decision?

Yes, the Appropriate Bureau Official's decision may be appealed in accordance with the regulations at 25 CFR part 2.

§ 290.24 What happens if an Indian tribe makes per capita payments without an approved tribal revenue allocation plan?

The Department of Justice may enforce the per capita approval requirements of IGRA for any tribe refusing to comply with the law.

§ 290.25 How does the Indian tribe assure compliance with its tribal revenue allocation plan?

You must establish a process in the tribal revenue allocation plan for reviewing expenditures of net gaming revenues and explain how you will correct deficiencies.

§ 290.26 How does the Indian tribe resolve disputes arising from per capita distributions?

You must establish a process to resolve disputes arising from per capita distributions.

§ 290.27 Do changes/amendments to a tribal revenue allocation plan require approval?

Yes, the Appropriate Bureau Official must approve any changes/amendments to a tribal revenue allocation plan to ensure that the changes/modifications conform to § 290.11 and the IGRA.

§ 290.28 What is the liability of the United States under this part?

The United States is not liable for the manner in which a tribe distributes funds from net gaming revenues.

Dated: May 22, 1996.

Ada E. Deer,

Assistant Secretary—Indian Affairs.

[FR Doc. 96–14061 Filed 6–6–96; 8:45 am]

BILLING CODE 4310–02–P

Fish and Wildlife Service

50 CFR Part 17

Endangered and Threatened Wildlife and Plants; Reopening of Comment Period and Notice of Public Hearing on Proposed Endangered Status for the Least Chub (Iotichthys Phlegethontis) and Proposed Designation of Its Critical Habitat

AGENCY: Fish and Wildlife Service, Interior.

ACTION: Proposed rule; notice of public hearing and reopening of comment period.

SUMMARY: The Fish and Wildlife Service (Service) provides notice that a public hearing will be held on the proposed determination of endangered status with critical habitat for the least chub (*Iotichthys phlegethontis*). To accommodate the public hearing, the comment period on the proposal is reopened. The least chub is a small fish in the minnow family endemic to the Bonneville Basin in Utah. All interested parties are invited to submit comments on this proposal.

DATES: The public hearing will be held from 3 p.m. to 5 p.m. and 6 p.m. to 8 p.m., with registration beginning at 2:30 p.m., on Thursday, June 27, 1996. Comments will be accepted until July 15, 1996.

ADDRESSES: The public hearing will be held at the Wendover High School, 110 Wildcat Blvd., Wendover, Utah. Written comments and materials should be sent to the Field Supervisor, Fish and Wildlife Service, 145 East 1300 South, Suite 404, Salt Lake City, Utah, 84115. Comments and materials received will be available for inspection, by appointment, during normal business hours, at the above address.

FOR FURTHER INFORMATION CONTACT: Robert D. Williams, Assistant Field Supervisor, telephone 801/524–5001 (see **ADDRESSES** Section).

SUPPLEMENTARY INFORMATION:

Background

The least chub (*Iotichthys phlegethontis*) is a small monotypic minnow endemic to the Bonneville Basin of Utah where it was once common and widely distributed. Populations of least chub have declined and continue to be threatened by habitat loss and degradation, and the introduction of nonactive species which compete with and predate least chub. The species is now restricted to several spring systems in the Snake Valley of western Utah, with one additional population recently discovered in eastern Juab County near Mona, Utah. Listing the least chub as endangered would afford the species protection under the Endangered Species Act (Act) of 1973, as amended (16 U.S.C. 1531 et seq.).

On September 29, 1995, the Service published a proposed rule (60 FR 50518) to list the least chub as an endangered species with critical habitat. Section 4(b)(5)(E) of the Act requires that a public hearing be held if requested within 45 days of publication

of the proposal in the Federal Register. During the open comment period a public hearing request was received from private land owners in the vicinity of the species proposed critical habitat. The Service originally scheduled a hearing on December 18, 1995. However, this hearing was canceled due to the listing moratorium enacted by Congress. This moratorium has now been lifted and the Service is proceeding with the public hearing.

Public Comments Solicited

The Service has scheduled this hearing on Thursday, June 27, 1996 from 3 p.m. to 5 p.m. and 6 p.m. to 8 p.m., with registration beginning at 2:30 p.m. mountain daylight time (see **ADDRESSES** above). Anyone wishing to make an oral statement for the record is encouraged to provide a written copy of their statement to be presented to the Service at the start of the hearing. In the event there is a large attendance, the time allotted for oral statements may have to be limited.

Oral and written statements concerning the proposed rule will receive equal consideration by the Service. There are no limits to the length of written comments presented at this hearing or mailed to the Service. Comments particularly are sought concerning:

(1) Biological, commercial trade, or other relevant data concerning any threat (or lack thereof) to the least chub;

(2) The location of any additional populations of least chub and the reasons why any habitat should or should not be determined to be critical habitat as provided in section 4 of the Act;

(3) Additional information concerning the range, distribution, and population size of this species;

(4) Current or planned activities which may adversely modify the area that is being considered for critical habitat; and

(5) Any foreseeable economic or other impacts resulting from the proposed designation of critical habitat.

Legal notices and news releases announcing the date, time, and location of the hearing are being published in newspapers concurrently with this Federal Register notice.

The previous comment period on this proposal closed on January 19, 1996. To accommodate this hearing, the Service reopens the comment period. Written comments may now be submitted until July 15, 1996, to the Service office identified in the **ADDRESSES** section above. All comments must be received before the close of the comment period to be considered.

Author

The author of this notice is Janet Mizzi, Utah Field Office (see **ADDRESSES** above), telephone 801/524–5001.

Authority

Authority for this action is the Endangered Species Act of 1973, as amended (16 U.S.C. 1531 et seq.).

Dated: May 31, 1996.

Terry T. Terrell,

Deputy Regional Director, Region 6, Fish and Wildlife Service.

[FR Doc. 96–14336 Filed 6–6–96; 8:45 am]

BILLING CODE 4310–55–M

Notices

Federal Register
Vol. 61, No. 111
Friday, June 7, 1996

This section of the FEDERAL REGISTER contains documents other than rules or proposed rules that are applicable to the public. Notices of hearings and investigations, committee meetings, agency decisions and rulings, delegations of authority, filing of petitions and applications and agency statements of organization and functions are examples of documents appearing in this section.

DEPARTMENT OF AGRICULTURE

Foreign Agricultural Service

Notice of a Program To Provide for the Sharing of United States Agricultural Expertise With Emerging Markets

AGENCY: Foreign Agricultural Service, USDA.

ACTION: Notice.

SUMMARY: This notice contains information concerning a U.S. Department of Agriculture technical assistance program that was amended by the Federal Agriculture Improvement and Reform Act of 1996 in order to provide such assistance to emerging markets. This notice replaces the Federal Register notice published on June 3, 1992 (57 FR 23374).

DATES: This notice is effective immediately.

ADDRESSES: Requests for information should be addressed to the Director, Emerging Markets Office, Foreign Agricultural Service, U.S. Department of Agriculture, Room 6506, South Building, Washington, DC 20250; Fax (202) 690–4369.

SUPPLEMENTARY INFORMATION:

1. Description of Program

The Emerging Markets Program is authorized by section 1542(d) of the Food, Agriculture, Conservation and Trade Act of 1990, as amended (1990 Act). Section 1542(d) provides that:

For each of the fiscal years 1991 through 2002, the Secretary of Agriculture . . . in order to develop, maintain, or expand markets for United States agricultural exports, is directed to make available to emerging markets the expertise of the United States.

The expertise is to be used to assess, recommend, and identify projects and activities, including those that have the potential to reduce trade barriers, to enhance the food and rural business systems needs of emerging markets, and to provide technical assistance to implement such projects and activities.

The Emerging Markets Office (EMO) of the Foreign Agricultural Service is responsible for the management and implementation of the Emerging Markets Program.

2. Country Eligibility

Section 1542(f) of the 1996 Act provides that an emerging market is any country that:

—Is taking steps toward a market-oriented economy through the food, agriculture, or rural business sectors of the economy of the country; and
—Has the potential to provide a viable and significant market for United States commodities or products of United States agricultural commodities.

In order to determine whether a country has the potential to provide a viable and significant market for U.S. agricultural commodities and products, EMO will consider various factors, including:

(a) Per capita income less than $8355 (the food aid per capita income cut-off figure of OECD's Development Assistance Committee);

(b) Population greater than 1 million; or

(c) Positive economic growth factors.

3. Assessments, Recommendations and Identification of Opportunities and Projects

Section 1542(d)(1)(B) of the 1990 Act provides that the Secretary may select teams of experts to conduct assessments (including an analysis of the food and rural business needs of an emerging market), make recommendations, and identify opportunities and projects which technical expertise could be provided to address those needs.

Teams of experts will not be used if sufficient information is available from existing information to determine whether technical assistance is needed to implement a project. Under other circumstances the Secretary may select an individual or firm to provide the same services as those of a team of experts. A data base of experts is maintained by EMO and the Farm Service Agency (FSA). Persons interested in being included in the data base may write EMO for information. In addition, an advisory committee, authorized by the 1990 Act and the Federal Advisory Committee Act, may provide advice to the Secretary concerning assessments, recommendations, and the identification of opportunities and projects for which technical assistance would be utilized.

45. Technical Assistance

In accordance with section 1542(d)(1)(D) of the 1990 Act, the Secretary is authorized to provide or pay for technical assistance, including the establishment of extension services, to enable individuals or other entities to implement recommendations or to carry out identified opportunities or projects. If USDA does not have the expertise to provide needed technical assistance, USDA will consider entering into contracts, or cooperative agreements with non-USDA sources in order to obtain the needed expertise. In such instances, USDA will solicit technical assistance through the Commerce Business Daily. Contracts, grants, and cooperative agreements will be awarded according to USDA policies, guidelines, and regulations, which are available from EMO on request.

5. Selection

Factors used to determine whether the Secretary will provide or pay for technical assistance to implement projects may include:

1. Amount of private sector contributions;
2. Prospects for developing, maintaining or increasing U.S. agricultural exports;
3. Long-range impact on U.S. agricultural exports;
4. Enhancement of emerging markets' food and rural business systems;
5. Impact on the transformation of host country economics to free market systems;
6. Compatibility with U.S. foreign policy interests; and
7. Cost

Signed at Washington, D.C. on May 31, 1996.

August Schumacher, Jr.,

Administrator, Foreign Agricultural Service.

[FR Doc. 96–14407 Filed 6–6–96; 8:45 am]

BILLING CODE 3410–10–M

Forest Service

Intergovernmental Advisory Committee Subcommittee Meeting

AGENCY: Forest Service, USDA.

ACTION: Notice of Meeting.

SUMMARY: The Intergovernmental Advisory Committee will meet on June 17, 1996, at the Robert Duncan Plaza Building, 333 SW First Ave., Portland, Oregon 97208 in Rooms 3A and 3B on the 3rd floor. The purpose of the meeting is to continue discussions to identify issues and solutions to improve the implementation of the Northwest Forest Plan (NFP) and in particular to focus on better ways to integrate the ecological and economic aspects of the NFP. The meeting will begin at 9:00 a.m. on June 17 and continue until 5:00 p.m. Agenda items to be discussed include, but are not limited to: (1) issues which impede the efficient implementation of the NFP, (2) recommendations to resolve the issues, and (3) identification of procedures to implement recommendations. The IAC meeting will be open to the public and is fully accessible for people with disabilities. Interpreters are available upon request in advance. Written comments may be submitted for the record at the meeting. Time will also be scheduled for oral public comments. Interested persons are encouraged to attend.

FOR FURTHER INFORMATION CONTACT: Questions regarding this meeting may be directed to Don Knowles, Executive Director, Regional Ecosystem Office, 333 SW 1st Avenue, P.O. Box 3623, Portland, OR 97208 (Phone: 503–326–6265).

Dated: May 29, 1996.

Donald R. Knowles,

Designated Federal Official.

[FR Doc. 96–14376 Filed 6–6–96; 8:45 am]

BILLING CODE 3410–11–M

Natural Resources Conservation Service

Changes in Hydric Soils of the United States

AGENCY: Natural Resources Conservation Service (formerly the Soil Conservation Service), USDA.

ACTION: Notice of change.

SUMMARY: Pursuant to 7 CFR 12.31(a)(3)(i), the Natural Resources Conservation Service, United States Department of Agriculture gives notice of a change in the Hydric Soils of the United States as listed in the third edition of the Hydric Soils of the United States, Miscellaneous Publication 1491, USDA, Soil Conservation Service, June 1991.

FOR FURTHER INFORMATION CONTACT: P. Michael Whited, Chair, National Technical Committee for Hydric Soils, NRCS Wetland Institute, USDA–NAC, East Campus–UNL, Lincoln, NE 68583–0822.

SUPPLEMENTARY INFORMATION: The third edition of the Hydric Soils of the U.S. was published in June 1991, and a notice of change published in the Federal Register, October 11, 1991. Vol. 56, No. 198, page 51371. Changes to this document were made in 1993 and published in the Federal Register October 6, 1993, Vol. 58, No. 192, page 52078. Further changes were made in 1994 and published in the Federal Register July 13, 1994, Vol. 59, No. 133, page 35680. The changes published herein reflect soils added and deleted since the 1994 Federal Register notice.

The national list of hydric soils changes as additional soil series are recognized and defined and/or properties of existing soil series are updated based on additional data. These changes reflect refinements in knowledge of the soils of the United States. New soil series are recognized as soils are mapped in previously unmapped areas. These new series have always met the hydric criteria, whether recognized as series or not, and thus represent as insignificant change in acreage of hydric soils. Soils that are removed from the list are mostly dry phases of existing hydric soils. These dry phases would not have met wetlands hydrology criteria, thus represent an insignificant change in acreage of wetlands.

The hydric soils list is computer generated using the hydric soil criteria and a database of properties of each soil series in the U.S. The current hydric soil criteria was published in the Federal Register February 24, 1995, Vol. 60, No. 37, page 10349. The database is also used to generate interpretations of how soils perform for many land uses. Therefore, some changes in the list of hydric soils result from adding phases for a hydric soil to refine other interpretations. This split or addition of a hydric phase causes an increase in the number of hydric soils, but does not affect the acres of the hydric soil. Data for all soil series are in the Soil Interpretations Record and may be reviewed by contacting a local office of the Natural Resources Conservation Service in the appropriate state.

Dated: May 6, 1996.

Norman C. Melvin III,

Plant Ecologist, Wetland Institute.

Richard W. Arnold,

Director, Soils Division.

Briefing Paper, National List of Hydric Soils: Prepared by: P. Michael Whited, April 1996.

Background

—The National List of Hydric Soils is:

- Published by the Natural Resources Conservation Service.
- Revised annually and notice is filed in the Federal Register.
- Generated from Soil Interpretations Records in the National Soil Database.

—The National Technical Committee for Hydric Soils reviews and concurs with changes to the National List of Hydric Soils.

—The Soil Interpretations Records for soil series are:

- Continuously updated as data is collected on soil properties.
- Reviewed by the soil survey Staff at MLRA Soil Survey Regional Offices.
- Used in all aspects of the National Soil Survey Program of which soils are a small part.

Reasons for Changes in the Hydric Soil List

—Addition of new soil series due to:

- Newly mapped areas (soils have always been hydric but have not been previously recognized as soil series).
- Narrowing of an existing series into two soils. An example being a series that is both hydric and nonhydric being split into their respective parts.

—Result from new phases being added to an existing soil series. Phases are added for many reasons and include:

- Flooding and ponding phases of which some may be hydric and others nonhydric. Many of these changes are made to accommodate nonhydric interpretations of soil use.
- Surface texture or depth phases both of which are not related to change in hydric soil status but are needed for other interpretations.
- Wetness or water table phases of which some may be hydric and others nonhydric. Some of these changes are made to accommodate other interpretations of soil use.

—Result from change in flooding, ponding, water table, or drainage class as a result of new information. Soils are added or deleted from the list due to these changes.

Summary of Changes From 1994 National List

—287 entries (soils) added of which:

• 105 are new soil series established from new soil mapping. These areas of hydric soils which are given new names are previously unmapped and thus have not affect on acres of hydric soils.

• 120 are phases of existing hydric soils. These are new phase names for existing hydric soils and thus have no affect on acres of hydric soils.

• 41 were changed from nonhydric to hydric based on updated technical information such as: water table depth, or flooding/ponding duration.

• 13 series were split—hydric phases were established for soils that previously would have been both hydric and nonhydric. The whole series may have been considered as hydric previously, but the nonhydric part would not have met the hydric soil criteria. Because only part of the original series met the hydrology criteria, this change has little affect on acres of wetlands.

• 8 series were added because Soil Interpretations Record numbers were changed for administrative purposes. These same soils appear on the change list as deletions, thus there is no affect on the acres of hydric soils.

—25 entries (soils) were deleted of which:

• 3 series were split into nonhydric and hydric phases. The hydric phases appear on the list as additions, thus there is no affect on the acres of hydric soils.

• 6 series interpretation records were dropped due to non-use. The central concepts of these soils have been incorporated into other soil series, thus there is no affect on the acres of hydric soils

• 8 series were deleted because Soil Interpretations Record numbers were changed for administrative purposes. These same soils appear on the change list as additions, thus there is no affect on the acres of hydric soils.

• 8 series were deleted based on updated technical information. These have been borderline hydric soils and would not have met wetland hydrology criteria. The changes slightly reduces the acres of hydric soils.

SIR No.	Soil series	Reason
	Soils Added to the National List of Hydric Soils in 1995 Justification	
CO3592	Acasco, gravelly substratum	New phase of existing hydric soil.
TN0230	Agee, frequent flooding	New phase of existing hydric soil.
UT1928	Airport, wet	Updated technical information.
CO4667	Alamosa, clayey substratum	New phase of existing hydric soil.
CO3741	Alamosa, stratified substratum	New phase of existing hydric soil.
CO3509	Alamosa, warm	New phase of existing hydric soil.
MT1496	Albicalis	New soil series.
CO3894	Almont, cool	New phase of existing hydric soil.
CO3860	Antero, stratified	New phase of existing hydric soil.
AK0501	Aquatna	New soil series.
UT2092	Arave, silty substratum	Updated technical information.
SD0579	Arlo, very poorly drained	New phase of existing hydric soil.
CA2585	Arlynda	New soil series.
CA2581	Artray, flooded	New phase of existing hydric soil.
CA7070	Artray, high elevation	New phase of existing hydric soil.
MT1485	Bandy	New soil series.
MT1653	Bandy, occasionally flooded	New soil series.
TX1280	Barnett	New soil series.
TX1281	Barnett, overwash	New soil series.
NE0153	Barney, loamy surface	New phase of existing hydric soil.
NE0154	Barney, loamy, wet	New phase of existing hydric soil.
MT1617	Barzee	New soil series.
CA2586	Bayside, very poorly drained	New phase of existing hydric soil.
CO4140	Big Blue, cool	New phase of existing hydric soil.
CO3600	Big Blue, mottled subsoil	New phase of existing hydric soil.
IL0463	Birds, undrained	New phase of existing hydric soil.
ID1897	Blackwell, cool	New phase of existing hydric soil.
MT1273	Blossberg	Updated technical information.
MN0808	Blue Earth, ponded	New phase of existing hydric soil.
MT1505	Bonebasin	New soil series.
MT1654	Bonebasin, occasionally flooded	New soil series.
MO0355	Booker, poorly drained	New phase of existing hydric soil.
MD0170	Boxiron	New soil series.
OR0782	Bragton	New soil series.
IL0464	Brooklyn, undrained	New phase of existing hydric soil.
ME0143	Bucksport, ponded	New phase of existing hydric soil.
CA2759	Burman, moderately deep	New soil series.
CA2760	Burman, occasionally flooded	New soil series.
UT1930	Cache, wet	Updated technical information.
IA0185	Calco, ponded	Updated technical information.
IA0312	Calcousta	Updated technical information.
MT1406	Canarway	New soil series.
MT1432	Canarway, heavy metals	New soil series.
UT4240	Canburn, stratified	Updated technical information.
MI0687	Cathro, very bouldery	New phase of existing hydric soil.
MN0752	Cedarrock	New soil series.
CO3862	Chaffee, stratified	New phase of existing hydric soil.
MN0768	Chaska, channeled	New phase of existing hydric soil.
SC0152	Chastain, ponded	New phase of existing hydric soil.
MN0748	Chetomba	New soil series.

SIR No.	Soil series	Reason
GU0318	Chia	Record # changed, old # appears as deletion.
ID1924	Chickreek, flooded	New phase of existing hydric soil.
SD0327	Clamo, gravelly substratum	New phase of existing hydric soil.
SD0389	Clamo, loamy substratum	New phase of existing hydric soil.
SD0542	Clamo, poorly drained	New phase of existing hydric soil.
OR1599	Clawson, high precipitation	New phase of existing hydric soil.
CA2703	Clear Lake MAP>20	New phase of existing hydric soil.
MT1500	Clunton	New soil series.
MT1557	Clunton	New soil series.
CA2521	Columbia, channeled	New phase of existing hydric soil.
CA2519	Columbia, frequently flooded	New phase of existing hydric soil.
MT1501	Cometcrik	New soil series.
CA2680	Corbiere, frequently flooded	New hydric phase of existing non-hydric soil.
MD0180	Corsica	New soil series.
MN0688	Corvuso	New soil series.
MN0676	Cosmos	New soil series.
OR1602	Cove, rarely flooded	New phase of existing hydric soil.
MN0691	Crowriver	New soil series.
UT2093	Cudahy, clayey substratum	Updated technical information.
UT1980	Cudahy, wet	Updated technical information.
OK0241	Cupco	Updated technical information.
GU0323	Dechel	Record # changed, old # appears as deletion.
MI0736	Deford, mucky surface	New phase of existing hydric soil.
CA2509	Dello	New soil series.
IL0465	Denny, undrained	New phase of existing hydric soil.
MN0713	Dora, ponded	New phase of existing hydric soil.
TX1243	Dreka	Updated technical information.
MT1520	Dunkleber	New soil series.
CO3638	Eachuston, short FFS	New phase of existing hydric soil.
SD0590	Egas, poorly drained	New phase of existing hydric soil.
MN0753	Egglake, depressional	New phase of existing hydric soil.
IL0456	Elpaso	New soil series.
CA2704	Esquon, MAP>20	New soil series.
TX1265	Estes, occasionally flooded	New phase of existing hydric soil.
OK0356	Ezell	Updated technical information.
MN0767	Faxon, soft bedrock	New phase of existing hydric soil.
MT1478	Finn	New soil series.
MT1477	Foolhen	New soil series.
MN0692	Forestcity	New soil series.
IA0669	Forney, dry	Updated technical information.
MN0718	Foxlake	New soil series.
TX0911	Franeau	New soil series.
NE0183	Gannet, poorly drained	New phase of existing hydric soil.
NE0192	Gannet, very poorly drained	New phase of existing hydric soil.
CO4412	Gas Creek, cobbly	New phase of existing hydric soil.
CO4155	Gas Creek, cool	New phase of existing hydric soil.
CO3870	Gas Creek, gravelly	New phase of existing hydric soil.
MI0691	Gay, very stony	New phase of existing hydric soil.
CO3590	Gerrard, loamy	New phase of existing hydric soil.
C04692	Gerrard, thick surface	New phase of existing hydric soil.
PA0172	Gleneyre	New soil series.
C04157	Gold Creek, cool	New phase of existing hydric soil.
NE0419	Gothenburg, loamy	New phase of existing hydric soil.
ID1906	Grasshopper	New soil series.
PR0102	Guayabota	Updated technical information.
C03513	Hagga, loamy surface	New phase of existing hydric soil.
AK0402	Haggard	New soil series.
IA0643	Harps	Updated technical information.
IA0671	Harps, dry	Updated technical information.
IA0681	Harps, stratified substratum	New phase of existing hydric soil.
WI0546	Hegge	New soil series.
NE0513	Histosols	New phase of existing hydric soil
IA0213	Holly Springs, Low PPT	Updated technical information.
AK0404	Hufman	New soil series.
MT1514	Iffgulch	New soil series.
GU0324	Ilachetomel	Record # changed, old # appears as deletion.
MD0173	Indiantown	New soils series.
GU0353	Inkosr	Record # changed, old # appears as deletion.
GU0354	Insak	Record # changed, old # appears as deletion.
CO4185	Irim, cool	New phase of existing hydric soil.
CO4413	Irim, gravelly	New phase of existing hydric soil.
MI0694	Jacobsville, stony	New phase of existing hydric soil.
MI0693	Jacobsville, very stony	New phase of existing hydric soil.
SD0486	James, very poorly drained	New phase of existing hydric soil.

SIR No.	Soil series	Reason
MO0136	Kampville	Updated technical information.
MI0727	Kanotin	New soil series.
NE0235	Kezan, channeled	New phase of existing hydric soil.
NE0232	Kezan, MAAT 47–53	New phase of existing hydric soil.
CO3681	Kilgore, extremely gravelly	New phase of existing hydric soil.
PA0173	Kimbles	New soil series.
AK0397	Klasi	New soil series.
IA0682	Knoke, stratified substratum	New phase of existing hydric soil.
SD0540	Kolls, ponded	New phase of existing hydric soil.
UT0306	Kovich	Updated technical information.
AK0428	Koyuktolik	New soil series.
CO3479	Lajara, flooded	New phase of existing hydric soil.
CO4673	Lajara, stratified	New phase of existing hydric soil.
MT1385	Larchpoint	New soil series.
CO4199	Las Animas, MAP>10	New phase of existing hydric soil.
CO4269	Las Animas, saline flooded	New phase of existing hydric soil.
MO0372	Leslie, poorly drained	New phase of existing hydric soil.
MO0360	Levasy, poorly drained	New phase of existing hydric soil.
AK0473	Liscum	New soil series.
AK0497	Liscum	New soil series.
UT0466	Logan, moderately drained	Updated technical information.
UT2084	Logan, stratified substratum	Updated technical information.
UT2100	Logan, stratified substratum, flooded	Updated technical information.
NC0215	Longhope, ponded	New soil series.
CO3595	Longmont, clayey	New hydric phase of existing non-hydric soil.
NE0248	Loup, poorly drained	New phase of existing hydric soil.
NE0249	Loup, very poorly drained	New phase of existing hydric soil.
MT3080	Lowder, very bouldery	New soil series.
ND0447	Ludden, very poorly drained	New phase of existing hydric soil.
UT2782	Magna, wet	Updated technical information.
AK0413	Mankomen	New soil series.
NE0161	Marlake, loamy surface	New phase of existing hydric soil.
NE0157	Marlake, mucky surface	New phase of existing hydric soil.
MT1404	Mccabe	New soil series.
MT1433	Mccabe, heavy metals	New soil series.
MY1651	Mccabe, moist	New soil series.
MT1619	Mcgregor	New soil series.
ND0437	Mckeen	New hydric phase of existing non-hydric soil.
ND0438	Mckeen, ponded	New hydric phase of existing non-hydric soil.
MT1572	Mckenton	New soil series.
MT1362	Meadowpeak	New soil series.
TX1004	Meaton	New soil series.
CO3644	Mendenhall, short FFS	New phase of existing hydric soil.
AK0394	Mendna	New soil series.
GU0325	Mesei	Record # changed, old # appears as deletion.
TX1285	Mollco	New soil series.
MT1573	Moltoner	New soil series.
MT1524	Moltoner, silty clay loam substratum	New soil series.
MS0132	Mooreville, frequently flooded	New phase of existing hydric soil.
MT1521	Mooseflat	New soil series.
MT1652	Mooseflat, occasionally flooded	New soil series.
AK0441	Mosquito	New soil series.
PR0202	Moteado, rubbly	Updated technical information.
CA2713	Mountom	New soil series.
IA0637	Mtsterling	New soil series.
MT1620	Murrstead	New soil series.
MI0703	Nahma, stony	New phase of existing hydric soil.
GU0307	Naniak	Record # changed, old # appears as deletion.
SD0536	Napa, rarely flooded	New phase of existing hydric soil.
MT1639	Newtman	New soil series.
GU0335	Ngerungor	Record # changed, old # appears as deletion.
CO4039	Niwot, cool	New hydric phase of existing non-hydric soil.
CO3596	Niwot, wet	Record # changed, old # appears as deletion.
MN0702	Northwood, ponded	New phase of existing hydric soil.
SD0547	Norway	New soil series.
SD0548	Norway, frequently flooded	New soil series.
AK0464	Nuka	New soil series.
CA2594	Occidental	New soil series.
IA0641	Okoboji, stratified substratum	New phase of existing hydric soil.
SD0563	Oldham, wet	New phase of existing hydric soil.
FL0141	Oldtown, depressional	New soil series.
FL0140	Oldtown, flooded	New soil series.
HI0186	Olokui	Updated technical information.
IA0674	Owego, dry	Updated technical information.

SIR No.	Soil series	Reason
MN0728	Parle	New soil series.
OK0011	Parsons	Updated technical information.
PA0180	Paupack	New soil series.
IL0466	Petrolia, undrained	New phase of existing hydric soil.
IL0467	Piopolis, undrained	New phase of existing hydric soil.
MI0707	Pleine, very stony	New phase of existing hydric soil.
UT2009	Poganeab, loamy surface	Updated technical information.
MO0361	Portage, poorly drained	New phase of existing hydric soil.
PR0207	Prieto, rubbly	Updated technical information.
MN0749	Prinsburg	New soil series.
UT1937	Provo Bay, loamy subsoil	Updated technical information.
MD0171	Purnell	New soil series.
IL0460	Racoon, undrained	New phase of existing hydric soil.
SD0588	Rauville, ponded	New phase of existing hydric soil.
IL0455	Reveenwash	New soil series.
ND0449	Regan, warm	New phase of existing hydric soil.
MI0743	Rollaway	New soil series.
CO4075	Rosane	New phase of existing hydric soil.
CO3865	Rosane, flooded	New phase of existing hydric soil.
CO3682	Rosane, high PPT	New phase of existing hydric soil.
MN0750	Rushriver	New phase of existing hydric soil.
UT1951	Salt Lake, gypsiferous substratum	Updated technical information.
UT2087	Saltair, saline	Updated technical information.
UT2038	Saltair, wet	Updated technical information.
UT2792	Saltair, wet	Updated technical information.
NE0434	Saltillo	New soil series.
CO3597	San Luis, wet	New hydric phase of existing non-hydric soil.
MN0348	Sandwick	New phase of existing hydric soil.
VI0017	Sandy Point	New soil series.
CO3867	Sawatch, gravelly	New phase of existing hydric soil.
CO3586	Schrader, stratified	New phase of existing hydric soil.
CO4454	Schrader, stratified	New phase of existing hydric soil.
NE0379	Scott, drained	New phase of existing hydric soil.
CA2454	Scribner, frequently flooded	New hydric phase of existing non-hydric soil.
MN0733	Seelyville, frequently flooded	New phase of existing hydric soil.
IL0461	Shiloh, undrained	New phase of existing hydric soil.
IL0457	Slacwater	New phase of existing hydric soil.
IA0633	Smithland	New soil series.
MI0542	Springport	New soil series.
MI0126	Springport, mucky surface	New soil series.
ID1322	Stamp	New phase of existing hydric soil.
ID1955	Stinkcreek	New soil series.
VI0021	Sugar Beach	New soil series.
AK0290	Suntrana	Updated technical information.
CA9409	Sweagert, thick substratum	New hydric phase of existing non-hydric soil.
AK0396	Swedna	New soil series.
AK0496	Tanacross	New soil series.
AK0482	Tangoe, wet	New soil series.
WA0838	Tanwax, drained	Updated technical information.
ID1905	Teneb	New soil series.
MT1640	Threefork	New soil series.
IA0632	Tieville	New soil series.
IA0655	Tilfer, soft bedrock	Updated technical information.
MI0722	Tobico, loamy surface	New phase of existing hydric soil.
MI0722	Tobico, mucky surface	New phase of existing hydric soil.
C04693	Torsido, stratified	New phase of existing hydric soil.
NY0162	Tughill, mucky surface	New phase of existing hydric soil.
CA2686	Tunjunga, overwash	New hydric phase of existing non-hydric soil.
IA0634	Uturin	New soil series.
CO3888	Vasquez, cool	New hydric phase of existing non-hydric soil.
CO4408	Vastine, stratified substratum	New phase of existing hydric soil.
CO4081	Venable, warm	New phase of existing hydric soil.
MT1211	Villard	Updated technical information.
CA2684	Vina, frequently flooded	New hydric phase of existing non-hydric soil.
TX1007	Viterbo	New soil series.
MI0729	Wabun	New soil series.
IA0687	Wacousta, stratified substratum	New phase of existing hydric soil.
OR1628	Wapato, high PPT	New hydric phase of existing non-hydric soil.
OR1067	Wasson	New soil series.
CA2720	Watterson, wet	New hydric phase of existing non-hydric soil.
IA0640	Webster, stratified substratum	New phase of existing hydric soil.
FL0142	Wekiva, depressional	New soil series.
CA2592	Weott	New soil series.
MT1139	Wetsand	Updated technical information.

SIR No.	Soil series	Reason
MT1337	Wetsand, rarely flooded	Updated technical information.
MT1706	Wetsand, saline	Updated technical information.
NV2836	Wetvit	New soil series.
NV2837	Wetvit, occasionally flooded	New soil series.
C04217	Wichup, cool	New phase of existing hydric soil.
CO3651	Wichup, short FFS	New phase of existing hydric soil.
MN0714	Wildwood, ponded	New phase of existing hydric soil.
CA2671	Willows, frequently flooded	New phase of existing hydric soil.
MI0718	Witbeck, extremely bouldery	New phase of existing hydric soil.
MI0717	Witbeck, very bouldery	New phase of existing hydric soil.
CA2593	Worswick	New soil series.
SD0584	Worthing, poorly drained	New phase of existing hydric soil.
ID1882	Yearian, rarely flooded	New phase of existing hydric soil.
MD0172	Zekiah	New soil series.
IA0665	Zook	New phase of existing hydric soil.
Soils Deleted From List in 1995 Justification		
HI0318	Chia	Record # changed, new # appears as addition.
HI0323	Dechel	Record # changed, new # appears as addition.
TX1173	Fannett	Record dropped due to non-use.
MN0178	Freer	Updated technical information.
HI0324	Ilachetomel	Record # changed, new # appears as addition.
HI0353	Inkosr	Record # changed, new # appears as addition.
HI0354	Insak	Record # changed, new # appears as addition.
MN0333	Keewatin	Updated technical information.
MN0601	Klossner, sandy substratum	Record dropped due to non-use.
WA0296	Konner	Record dropped due to non-use.
WA0953	Latah, drained	Updated technical information.
MO0168	Leslie	Series split into hydric & non-hydric, new # on adds.
HI0325	Mesei	Record # changed, new # appears as addition.
MS0099	Mooreville	Series split into hydric & non-hydric, new # on adds.
HI0307	Naniak	Record # changed, new # appears as addition.
HI0335	Ngerungor	Record # changed, new # appears as addition.
MI0231	Ogemaw	Updated technical information.
NE0146	Platte, channeled	Updated technical information.
SC0032	Polawana	Record dropped due to non-use.
MN0091	Shields	Updated technical information.
UT1902	Steed, loamy	Updated technical information.
CA2079	Stornetta	Updated technical information.
MN0664	Talmoon, stratified substratum	Record dropped due to non-use.
CO0636	Vastine, saline-alkali	Series split into hydric & non-hydric, new # on adds.
CA2456	Wekoda, flooded	Record dropped due to non-use.

SOILS ON THE DEC. 95 HYDRIC LIST, BUT NOT ON THE DEC. 93 HYDRIC LIST (ADDITIONS) REVISED DECEMBER 15, 1995

[The ''Hydric Criteria Number'' Column Indicates What Caused the Soil to be Included in the Hydric List. See the ''Criteria for Hydric Soils'' to Determine the Meaning of This Column]

Series and subgroup	Temperature	Drainage class	High water table		Perm. within 20 inches	Flooding			Hydric criteria number	Capability	
			Depth	Months		Frequency	Duration	Months		Critical phase criteria	Class and subclass
Acasco, Gravelly Substratum (CO3592) Typic Haplaquolls.	Frigid	P	1.0–2.0	May–July	<6.0	None-Rare			2B3	0–1%	6C
Agee, Frequent Flooding (TN0230) Vertic Epiaquolls.	Thermic	P	0–1.0	Jan–Apr	<6.0	Frequent	V Brief-Brief	Jan–Apr	2B3	All	3W
Airport, Wet (UT1928) Aquic Natrixerolls [1].	Mesic	P	0.5–1.5	Apr–Sep	<6.0	Rare			2B3	0–1%	6W
Alamosa, Clayey Substratum (CO4667) Typic Argiaquolls [1].	Frigid	P, SP	1.0–3.0	May–Oct	<6.0	Frequent	Brief	May–Jun	2B3	0–2% Dry Saline Drained	5W 5W 6S 5C
Alamosa, Stratified Substratum (CO3741) Typic Argiaquolls [1].	Frigid	P	1.0–1.5	May–Jul	<6.0	Occasional	Brief	May–Jun	2B3	1–6%	4C

SOILS ON THE DEC. 95 HYDRIC LIST, BUT NOT ON THE DEC. 93 HYDRIC LIST (ADDITIONS) REVISED DECEMBER 15, 1995—Continued

[The ''Hydric Criteria Number'' Column Indicates What Caused the Soil to be Included in the Hydric List. See the ''Criteria for Hydric Soils'' to Determine the Meaning of This Column]

Series and subgroup	Temperature	Drainage class	High water table		Perm. within 20 inches	Flooding			Hydric criteria number	Capability	
			Depth	Months		Frequency	Duration	Months		Critical phase criteria	Class and subclass
Alamosa, Warm (CO3509) Typic Argiaquolls [1].	Frigid	P	1.0–1.5	May–Oct	<6.0	Frequent	Brief	May–Jun	2B3	0–2% Non-saline 2–8% Non-saline Saline Warm	5W 5W 6W 5W
Albicalis (MT 1496) Aeric Fluvaquents.		P	1.0–2.0	Apr–Jul	<6.0	Rare-Occasional	Brief	Apr–Jun	2B3	Mod Temp	5W
Almont, Cool (CO3894) Pergelic Cryaquolls.	Cryic	P	0.5–1.5	Jun–Jul	<6.0	None			2B3	10–25% 25–65% 65–70%	6E 7E 8E
Antero, Stratified (CO3860) Typic Haplaquepts [1].	Frigid	SP, P	1.0–2.0	Jan–Dec	<6.0	Frequent	Brief	May–Aug	2B3	1–3%	6W
Aquanta (AK0501) Typic Cryaquents.	Cryic	VP	0.–1.5	Apr–Oct	<6.0	Common	Brief-Long	Apr–Oct	2B3, 4	0–3%	5W
Arave, Silty Substratum (UT2092) Aquic Natrustalfs.	Mesic	P	1.0–2.0	Arp–Sep	<6.0	Rare			2B3	All	7W
Arlo, Very Poorly Drained (SD0579) Typic Calciaquolls.	Mesic	VP	0–0.5	Oct–Jul	<6.0	Common	Brief	Mar–Oct	2B3	All	5W
Arlynda (CA2585) Typic Fluvaquents.	Mesic	VP	0–1.0	Dec–Apr	<6.0	Frequent	Brief	Dec–Feb	2B3		
Artray, Flooded (CA2581) Cumulic Haplaquolls.	Mesic	P	0.5–1.0	Apr–Jun	<6.0	Frequent	Long	Mar–Jun	2B3,4	All	6W
Artray, High Elevation (CA7070) Cumulic Haplaquolls.	Mesic	P	0.5–4.0	Jan–Dec	<6.0	Occasional	Brief	Jan–May	2B3	All	6W
Bandy (MT1485) Typic Endoaquolls.	Frigid	P	1.0–2.0	Apr–Aug	<6.0	None-Rare			2B3	0–4%	5W
Bandy, Occasionally Flooded (MT 1653) Typic Endoaquolls.	Frigid	P	1.0–2.0	May–Jun	<6.0	Occasional	Brief	Jan–Jun	2B3	0–4%	4W
Barnett (TX 1280) Vertic Fluvaquents.	Hyper-Thermic	VP	0–1,0	Jan–Dec	<6.0	Frequent	Long	Jan–Dec	2B3,4	All	6W
Barnett, Overwash (TX1281) Vertic Fluvaquents.	Hyper-Thermic	VP	0–2.5	Jan–Dec	<6.0	Frequent	Long	Jan–Dec	2B3,4	All	6W
Barney, Loamy Surface (NEO153) Mollic Fluvaquents.	Mesic	P	0–1.5	Nov–Jun	<6.0	Common	Brief	Feb–Jul	2B3	0–2% Channeled	5W 6W
Barney, Loamy, Wet (NEO154) Mollic Fluvaquents.	Mesic	VP	0–1.0	Nov–Jun	<6.0	Common	Brief	Feb–Jul	2B3	0–2% Channeled	5W 6W
Barzee (MT1617) Typic Borofibrists.	Frigid	VP	0–1.0	Apr–Oct	<6.0	Occasional	Long	Apr–Jun	1	0–2%	5W
Bayside, Very Poorly Drained (CA2586) Aeric Tropic Fluvaquents.	Isomesic	VP	0–1.0	Jan–Mar	<6.0	Frequent	Brief	Dec–Feb	2B3		
Big Blue, Cool (CO4140) Fluvaquentic Haplaquolls.	Frigid	P	0–3.0	May–Aug	<6.0	Rare			2B3	0–5%	6C
Big Blue, Mottled Subsoil (CO3600) Fluvaquentic Haplaquolls.	Frigid	P	0.5–1.0	May–Aug	<6.0	Frequent	Brief	May–Jun	2B3	0–3%	6W
Birds, Undrained (IL0463) Typic Fluvaquents.	Mesic	VP	+2–0.5	Oct–Jul	<6.0	Frequent	Long	Mar–Jun	2B3, 3, 4	Undrained	5W
Blackwell, Cool (ID1897) Typic Cryaquolls.	Cryic	P, VP	0–2.5	Mar–Jul	<6.0	Common	V Brief–Brief	Apr–Jun	2B3	Poorly Dr V Poorly Dr Cool	5W 6W 7W

SOILS ON THE DEC. 95 HYDRIC LIST, BUT NOT ON THE DEC. 93 HYDRIC LIST (ADDITIONS) REVISED DECEMBER 15, 1995—Continued

[The ''Hydric Criteria Number'' Column Indicates What Caused the Soil to be Included in the Hydric List. See the ''Criteria for Hydric Soils'' to Determine the Meaning of This Column]

Series and subgroup	Temperature	Drainage class	High water table		Perm. within 20 inches	Flooding			Hydric criteria number	Capability	
			Depth	Months		Frequency	Duration	Months		Critical phase criteria	Class and subclass
Blossberg (MT 1273) Typic Endoaquolls.	Frigid	P	1.0–2.0	Apr–Jul	<6.0	None-Rare			2B3	0–4%	5W
Blue Earth, Ponded (MN0808) Mollic Fluvaquents.	Mesic	VP	+3–0	Jan–Dec	<6.0	None-Rare			2B3, 3	Ponded	8W
Bonebasin (MT 1505) Fluvaquentic Endoaquolls.	Frigid	VP	90–1.5	Jan–Dec	<6.0	Non-Rare			2B3	0–2%	5W
Bonebasin (MT 1570) Fluvaquentic Endoaquolls.	Frigid	VP	0–1.0	Apr–Jun	<6.0	None-Rare			2B3	0–2%	5W
Bonebasin, Occasionally Flooded (MT1654) Fluvaquentic Endoaquolls.	Frigid	VP	0–1.0	Jan–Dec	<6.0	Rare-Occasional	Brief	Apr–Jun	2B3	0–2%	5W
Brooker, Poorly Drained (MO0355) Vertic Endoaquolls.	Mesic	P	0–1.0	Nov–Jun	<6.0	Rare–Common	Brief–Long	Nov–May	2B3, 4	Rare Occas Freq, Brief Freq, Long	3W 3W 4W 5W
Boxiron (MN01790) Histic Sulfaquents.	Mesic	VP	+1–0	Jan–Dec	<6.0	Frequent	V Brief	Jan–Dec	2B3, 3	All	8W
Bragton (OR0782) Sapric Terric Tropohemists.	Isomesic	VP	+1–2.0	Jan–Dec	<6.0	Frequent	Brief	Jan–Dec	1, 3	All	5W
Brooklyn, Undrained (IL0464) Vertic Albaqualfs.	Mesic	P	+1–0	Jan–Jun	<6.0	None–Rare			3B3, 3	Undrained	5W
Bucksport, Ponded (ME0143) Typic Borosaprists.	Figid	VP	+1–0.5	Sep–Jul	<6.0	None			1, 3	All	7W
Burman, Moderately Deep (CA2759) Argic Duraquolls [1].	Mesic	SP	+.5–0.5	Jan–Mar	<6.0	None			2A, 3	0–5% None	4W
Burman, Occasionally Flooded (CA 2760) Argic Duraquolls [1].	Mesic	SP	+5–0.5	Dec–Apr	<6.0	Occasional	Brief	Dec–Mar	2A, 3	0–2%	4W
Cache, Wet (UT1930) Typic Salorthids [1].	Mesic	P	0–1.5	May–Oct	<6.0	None			2B3	All	7W
Calco, Ponded (IA0185) Cumulic Haplaquolls.	Mesic	VP	+2–0	Jan–Dec	<6.0	Common	Brief-Long	Feb–Nov	2B3, 3, 4	All	8W
Calcousta (IA0312) Typic Endoaquolls.	Mesic	VP	+1–1.0	Nov–Jul	<6.0	None			2B3, 3	Drained Undrained	3W 5W
Canarway (MT 1406).	Frigid	P	1.0–2.0	Apr–Jul	<6.0	Occasional	Brief	Apr–Jun	2B3	0–2%	6W
Canarway, Heavy Metals (MT 1432) Aeric Fluvaquents.	Frigid	P	1.0–2.0	Apr–Jul	<6.0	Occasional	Brief	Apr–Jun	2B3	0–2%	7E
Canburn, Stratified (UT 4240) Cumulic Endoaquolls.	Frigid	P	0.5–1.5	Jan–Dec	<6.0	Frequent	Long	Apr–Jun	2B3, 4	All	5W
Cathro, Very Bouldery (MI0687) Terric Borosaprists.	Frigid	VP	+1–1.0	Nov–Jun	<6.0	None			1	All	7S
Cedarrock (MN0752) Cumulic Epiaquolls.	Frigid	P	0.5–1.5	Oct–Jul	<6.0	Common	Brief	Mar–Jun	2B3	Occas Freq	3W
Chaffee, Stratified (CO3862) Cumulic Haplaquolls.	Frigid	P	0–1.5	Apr–Aug	<6.0	None			2B3	1–3%	6W
Chaska, Channeled (MN0768) Aeric Fluvaquents [1].	Mesic	SP	1.5–2.5	Nov–Jun	<6.0	Frequent	Long	Mar–Jun	4	Freq	6W

SOILS ON THE DEC. 95 HYDRIC LIST, BUT NOT ON THE DEC. 93 HYDRIC LIST (ADDITIONS) REVISED DECEMBER 15, 1995—Continued

[The ''Hydric Criteria Number'' Column Indicates What Caused the Soil to be Included in the Hydric List. See the ''Criteria for Hydric Soils'' to Determine the Meaning of This Column]

Series and subgroup	Temperature	Drainage class	High water table		Perm. within 20 inches	Flooding			Hydric criteria number	Capability	
			Depth	Months		Frequency	Duration	Months		Critical phase criteria	Class and subclass
Chastain, Ponded (SC0152) Typic Fluvaquents.	Thermic	P	+3–0	Nov–May	<6.0	Common	V Long	Nov–Jun	2B3, 3, 4	All	7W
Chetomba (MN0748) Typic Endoaquolls.	Mesic	P	0.5–1.5	Nov–Jun	<6.0	None			2B3	All	2W
Chia (GU0318) Terric Tropohemists.	Isohyperthermic	VP	+1–1.0	Jan–Dec	>6.0	Frequent	V Long	Jan–Dec	1, 3, 4		
Chickreek, Flooded (ID1924) Typic Cryaquents.	Cryic	P	+1–1.5	Jan–Dec	<6.0	Frequent	Long	May–Jul	2B3, 3, 4	0–1%	6W
Clamo, Gravelly Substratum (SD0327) Cumulic Vertic Endoaquolls [1].	Mesic	P	0.5–1.5	Oct–Jul	<6.0	Occasional	Brief	Mar–Sep	2B3	Drained Undrained	2W 4W
Clamo, Loamy Substratum (SD0389) Cumulic Vertic Endoaquolls [1].	Mesic	P	0.5–1.5	Oct–Jun	<6.0	Rare-Occasional	Long	Mar–Jun	2B3	PE31–44, Undrained PE>44, Drained PE>44, Undrained	4W 2W 4W
Clamo, Poorly Drained (SD0542) Cumulic Vertic Endoaquolls [1].	Mesic	P	0.5–1.5	Oct–Jun	<6.0	Common	Long	Mar–Jun	2B3, 4	PE>44, Drained PE>44, Undrained PE>31–44, Undrained PE>31–44, Drained	2W 4W 4W 2W
Clawson, High Precipitation (OR1599) Typic Haplaquepts.	Mesic	P	1.0–3.0	Nov–Jun	<6.0	None			2B3	All	3W
Clear Lake, MAP>20 (CA2703) Typic Pelloxererts [1].	Thermic	P	+1.–0	Dec–Apr	<6.0	Frequent	V Long	Dec–Apr	2B3, 3, 4	0–1% Map >20	3S
Clunton (MT1500) Fluvaquentic Endoaquolls.	Frigid	VP	+1–1.5	Jan–Dec	<6.0	None-Rare			2B3, 3	0–4% 4–15%	5W 6W
Clunton (MT1557) Fluvaquentic Endoaquolls.	Frigid	VP	0–1.0	Apr–Jul	<6.0	Rare-Frequent	Brief	Apr–Jun	2B3	0–4%	5W
Columbia, Channeled (CA2521) Aquic Xerofluvents [1 2].	Thermic	SP	3.0–5.0	Dec–Apr	<6.0	Frequent	Long	Dec–Apr	4	ETA<12	4W
Columbia, Frequently Flooded (CA2519) Aquic Xerofluvents [1 2].	Thermic	SP	3.05–5.0	Dec–Apr	<6.0	Frequent	Long	Dec–Apr	4	0–2%	4W
Cometcrik (MT1501) Cumulic Endoaquolls.	Frigid	P	1.0–2.0	Apr–Jul	<6.0	Frequent	Brief	Apr–May	2B3	2–8%	5W
Corbiere, Frequently Flooded (CA2680) Pachic Argixerolls.	Thermic	SP	2.0–4.0	Dec–Mar	<6.0	Frequent	Long	Dec–Mar	4	0–1%	4W
Corsica (MD0180) Typic Umbraquults.	Mesic	VP	+1–0.5	Dec–Jun	<6.0	None			2B3, 3	Undrained Drained	4W 3W
Corvuso (MN0688) Typic Calciaquolls.	Mesic	P	0.5–1.5	Nov–Jul	<6.0	None			2B3	All	2W
Cosmos (MN0676) Vertic Epiaquolls.	Mesic	P	0.5–1.5	Nov–Jul	<6.0	None			2B3	All	2W
Cove, Rarely Flooded (OR1602) Vertic Haplaquolls [1].	Mesic	P	0–1.0	Dec–Jun	<6.0	Rare			2B3	All	4W
Crowriver (MN0691) Typic Calciaquolls.	Mesic	P	0.5–1.5	Nov–Jul	<6.0	None			2B3	All	2W

SOILS ON THE DEC. 95 HYDRIC LIST, BUT NOT ON THE DEC. 93 HYDRIC LIST (ADDITIONS) REVISED DECEMBER 15, 1995—Continued

[The ''Hydric Criteria Number'' Column Indicates What Caused the Soil to be Included in the Hydric List. See the ''Criteria for Hydric Soils'' to Determine the Meaning of This Column]

Series and subgroup	Temperature	Drainage class	High water table		Perm. within 20 inches	Flooding			Hydric criteria number	Capability	
			Depth	Months		Frequency	Duration	Months		Critical phase criteria	Class and subclass
Cudahy, Clayey Substratum (UT2093) Petrocalcic Calciaquolls [1].	Mesic	P	0–2.0	Apr–Aug	<6.0	Occasional	Long	Apr–Jul	2B3	All	7W
Cudahy, Wet (UT1980) Petrocalcic Calciaquolls [1].	Mesic	VP	1.0–1.5	Apr–Aug	<6.0	Occasional	Long	Apr–Jun	2B3	0–3%	7W
Cupco (OK0241) Aeric Ochraqualfs.	Thermic	VP	0.5–2.0	Nov–May	<6.0	Rare-Occasional	V Brief–Brief	Jan–Jul	2B3	Occas Rare	4W 3W
Dechel (GU0323) Tropic Fluvaquents.	Isohyper-Thermic	VP	+1–1.0	Jan–Dec	<6.0	Frequent	V Long	Jan–Dec	2B3, 3, 4		
Deford, Mucky Surface (MI0736) Typic Psammaquents.	Frigid	P, VP	+1–1.0	Oct–May	<6.0	None			2B3, 3	Drained Undrained	3W 5W
Dello (CA2509) Typic Psammaquents [1 2].	Thermic	VP	3.0–4.0	Dec–Apr	<6.0	Frequent	Long	Dec–Apr	4	0–2%	4W
Denny, Undrained (IL0465) Vertic Albaqualfs.	Mesic	P	+1–0	Jan–Jun	<6.0	None			2B3, 3	Undrained	5W
Dora, Ponded (MN0713) Terric Borosaprists.	Frigid	VP	+2–0	Jan–Dec	<6.0	None			1, 3	All	8W
Dreka (TX1243) Aeric Fluvaquents [2].	Thermic	SP	0.5–2.5	Nov–May	<6.0	Frequent	Long	Nov–May	4	Freq	5W
Dunkleber (MT1520) Typic Borofibrists.	Frigid	VP	0 −0.5	Apr–Oct	<6.0	Rare			1	0–2%	5W
Eachuston, Short FFS (CO3638) Typic Cryaquents.	Cryic	P	0–0.5	May–Aug	<6.0	Common	Long	Apr–Jun	2B3, 4	1–5%	6C
Egas, Poorly Drained (SD0590) Typic Haplaquolls.	Mesic	P	0–1.5	Oct–Jun	<6.0	Common	Brief	Apr–Oct	2B3	All	6S
Egglake, Depressional (MN0753) Mollic Endoaqualfs.	Frigid	VP	+1–0.5	Mar–Dec	<6.0	None			2B3, 3	Drained undrained	3W 6W
Elpaso (IL0456) Typic Endoaquolls.	Mesic	P	+.5–1.5	Mar–Jun	<6.0	None			2B3, 3	Drained undrained	2W 5W
Esquon, Map>20 (CA2704) Xeric Epiaquerts.	Thermic	SP	0–4.0	Dec–Apr	<6.0	Frequent	V Long	Dec–Apr	2A, 4	All	3S
Estes, Occasionally Flooded (TX 1265) Aeric Dystraquerts.	Thermic	SP	+.5–1.0	Nov–Mar	<6.0	Occasional	Brief	Nov–May	2A, 3	Occas	4W
Ezell (OK0356) Aeric Fluvaquents.	Thermic	VP	+1.–1.0	Oct–Jun	<6.0	Common	V Brief	Mar–Aug	2B3, 3	All	5W
Faxon, Soft Bedrock (MN0767) Typic Endoaquolls.	Mesic	P, VP	0–1.0	Nov–May	<6.0	None-Common	V Brief	Apr–May	2B3	Drained Undrained	3W 6W
Finn (MT 1478) Typic Cryaquolls.	Cryic	P, VP	+1.–1.5	Apr–Aug	<6.0	None-Rare			2B3, 3	0–4%	6W
Foolhen (MT 1477) Typic cryaquolls.	Cryic	P, VP	+1.–1.5	Apr–Aug	<6.0	None-Rare			2B3, 3	0–8%	6W
Forestcity (MN0692) Typic Argiaquolls.	Mesic	P	0.5–1.5	Nov–Jul	<6.0	None			2B3	All	2W
Forney, Dry (IA0669) Vertic Fluvaquents.	Mesic	P	1.0–3.0	Nov–Jul	<6.0	Rare			2B3	PE>44	2W
Foxlake (MN0718) Vertic Epiaquolls.	Frigid	P	0.5–1.5	Oct–Jun	<6.0	None			2B3	All	2W
Franeau (TX0911) Sodic Endoaquerts.	Hyper-thermic	P	0 –1.5	Sep–May	<6.0	Occasional	V Brief	Jan–Dec	2B3	All	5W

SOILS ON THE DEC. 95 HYDRIC LIST, BUT NOT ON THE DEC. 93 HYDRIC LIST (ADDITIONS) REVISED DECEMBER 15, 1995—Continued

[The ''Hydric Criteria Number'' Column Indicates What Caused the Soil to be Included in the Hydric List. See the ''Criteria for Hydric Soils'' to Determine the Meaning of This Column]

Series and subgroup	Temperature	Drainage class	High water table		Perm. within 20 inches	Flooding			Hydric criteria number	Capability	
			Depth	Months		Frequency	Duration	Months		Critical phase criteria	Class and subclass
Gannett, Poorly Drained (NE0183) Cumulic Endoaquolls.	Mesic	P	0 –1.5	Nov–May	<6.0	None-Rare			2B3	0–2% Channeled	5 6W
Gannett, Very Poorly Drained (NE0192) Cumulic Endoaquolls.	Mesic	VP	+.5–1.0	Nov–Jun	<6.0	None-Rare			2B3,3	All	5W
Gas Creek, Cobbly (CO4412) Typic Endoaquolls.	Frigid	P	0–3.0	Apr–Jun	<6.0	Occasional	Brief	Apr–Jun	2B3	0–10%	6C
Gas Creek, Cool (CO4155) Typic Endoaquolls.	Frigid	P,SP	0–3.0	Jun–Sep	<6.0	Rare			2B3	0–1% 1–5%	7S 7S
Gas Creek, Gravelly (CO3870) Typic Endoaquolls.	Frigid	P	0–1.0	Jun–Jul	<6.0	None			2B3	1–3%	6W
Gay, Very Stony (MI0691) Typic Epiaquepts.	Frigid	P,VP	+1 –0.5	Oct–Jun	<6.0	None			2B3,3	All	6S
Gerrard, Loamy (CO3590) Typic Haplaquolls [1].	Frigid	P	1.0–1.5	Apr–Aug	<6.0	Rare			2B3	0–3%	6C
Gerrard, Thick Surface (CO4672) Typic Haplaquolls [1].	Frigid	P	1.0–1.5	Apr–Aug	<6.0	None-Rare			2B3	All	6W
Gleneyre (PA0172) Typic Fluvaquents.	Mesic	VP	+1.–0.5	Jan–Dec	<6.0	Frequent	Long	Sep–Jun	2B3,3,4	All	5W
Gold Creek, Cool (CO4157) Vertic Haplaquolls.	Frigid	P	1.0–2.0	Apr–Sep	<6.0	Occasional	Brief	Apr–Jun	2B3	0–5%	6C
Gothenburg, Loamy (NE0419) Typic Psammaquents.	Mesic	P	0–1.5	Nov–Jun	<6.0	Common	Brief	Dec–Jul	2B3	All	7W
Grasshopper (ID1906) Aquandic Umbraqualfs.	Frigid	P	0.5–1.5	Feb–Jun	<6.0	Frequent	Brief	Mar–Jun	2B3	0–3%	5W
Guayabota (PR0102) Lithic Tropaquepts.	Isothermic	P	0.5–1.5	Jan–Dec	<6.0	None			2B3	All	7S
Hagga, Loamy Surface (CO3513) Typic Fluvaquents.	Frigid	P	1.0–2.0	May–Jul	<6.0	Rare			2B3	0–5%	5W
Haggard (AK0402) Pergelic Cryohemists.	Cryic	VP	0.–1.0	Jan–Dec	<6.0	None			1	All	7W
Harps (IA0643) Typic Calciaquolls.	Mesic	P	1.0–3.0	Nov–Jun	<6.0	None			2B3	All	2W
Harps, Dry (IA0671) Typic Calciaquolls.	Mesic	P	0.5–2.0	Nov–Jul	<6.0	None			2B3	All	2W
Harps, Stratified Substratum (IA0681) Typic Calciaquolls.	Mesic	P	0–1.0	Nov–Jul	<6.0	None			2B3	All	2W
Hegge (WI0546) Vertic Epiaqualfs.	Frigid	P	0–1.0	Sep–Jun	<6.0	None			2B3	Drained Undrained	3W 5W
Histosols (NE0513) Medisaprists.		VP	+2–1.0	Nov–Jun	<6.0	None—Common	Brief—Long	Nov–Jun	1	All	8W
Holly Springs, Low PPT (IA0213) Cumulic Haplaquolls.	Mesic	P, VP	0–1.0	Nov–May	<6.0	Common	Brief	Mar–Jun	2B3	Undrained Drained	3W 2W
Hufman (AK0404) Terric Cryofibrists.	Cryic	VP	+.5–1.0	Jan–Dec	<6.0	Rare			1,3	0–1%	7W
Iffgulch (MT1514) Typic Endoaquolls.	Frigid	P	1.0–2.0	May–Jul	<6.0	Occasional	Brief	Mar–May	2B3	0–4%	5W
Ilachetomel (GU0324) Typic Sulfihemists.	Isohyper–Thermic	VP	+1–1.0	Jan–Dec	>=6.0	Frequent	V Long	Jan–Dec	1, 3, 4		

SOILS ON THE DEC. 95 HYDRIC LIST, BUT NOT ON THE DEC. 93 HYDRIC LIST (ADDITIONS) REVISED DECEMBER 15, 1995—Continued

[The ''Hydric Criteria Number'' Column Indicates What Caused the Soil to be Included in the Hydric List. See the ''Criteria for Hydric Soils'' to Determine the Meaning of This Column]

Series and subgroup	Temperature	Drainage class	High water table		Perm. within 20 inches	Flooding			Hydric criteria number	Capability	
			Depth	Months		Frequency	Duration	Months		Critical phase criteria	Class and subclass
Indiantown (MD0173) Cumulic Humaquepts.	Mesic	VP	+.5–0.5	Sep–Jun	<6.0	Frequent	Brief	Jan–Dec	2B3, 3	All	5W
Klasi (AK0397) Histic Pergelic Cryaquepts.	Cryic	P	0.–1.5	Jan–Dec	<6.0	None			2B3	0–12%	6W
Knoke, Stratified Substratum (IA0682) Vertic Endoaquolls.	Mesic	VP	+1–1.0	Nov–Jul	<6.0	None			2B3, 3	Drained Undrained	3W 7W
Kolls, Ponded (SD0540) Typic Epiaquerts.	Mesic	VP	+1.–1.0	Apr–Jun	<6.0	None			2B3, 3	Ponded	8W
Kovich (UT0306) Cumulic Endoaquolls.	Frigid	P	1.0–3.0	Nov–Jun	<6.0	Rare			2B3	All	7W
Koyuktolik (AK0428) Typic Borohemists.	Frigid	VP	1.0–0.5	Jan–Dec	>=6.0	None			1		
Lajara, Flooded (CO3479) Typic Haplaquolls.	Frigid	P	0.5–2.5	Apr–Jul	<6.0	Frequent	Brief	Apr–Jul	2B3	0–1%	6W
Lajara, Stratified (CO4673) Typic Haplaquolls.	Frigid	P	0.5–1.5	Apr–Jul	<6.0	Frequent	Brief	Apr–Jul	2B3	0–1% Saline	5W 6W
Larchpoint (MT1385) Typic Endoaquepts.	Frigid	P	0–2.0	Apr–Jun	<6.0	Occasional	Long	Mar–Jun	2B3	0–2%	5W
Las Animas, MAP>10 (CO4199) Typic Fluvaquents [1].	Mesic	P	1.0–3.0	May–Jul	<6.0	Occasional	Brief	May–Aug	2B3	0–3%	6C
Las Animas, Saline, Flooded (CO4269) Typic Fluvaquents [1].	Mesic	P	0–1.5	May–Jul	<6.0	Frequent	Brief	May–Aug	2B3	0–3%	6W–
Leslie, Poorly Drained (MO0372) Argiaquic Argialbolls [1].	Mesic	P	0–1.5	Nov–May	<6.0	None			2B3	0–2%	2W
Levasy, Poorly Drained (MO0360) Fluvaquentic Endoaquolls.	Mesic	P	0–1.5	Nov–Jun	<6.0	Rare-Common	Long	Feb–Jun	2B3, 4	Rare Occas Freq, Brief Freq, Long	3W 3W 4W 5W
Liscum (AK0473) Histic Cryaquepts.	Cryic	VP	0–1.0	Jan–Dec	<6.0	None-Rare			2B3	All	5W
Inkosr (GU0353) Typic Tropaquents.	Isohyperthermic	P	0.5–2.0	Jan–Dec	<6.0	Occasional	Brief	Jan–Dec	2B3	All	
Insak (GU0354) Typic Tropaquents.	Isohyperthermic	VP	+1–1.0	Jan–Dec	>6.0	Frequent	V Long	Jan–Dec	2B2, 3, 4		
Irim, Cool (CO4185) Typic Haplaquolls.	Frigid	P	0.5–1.5	Apr–Jun	<6.0	None-Rare			2B3	0–5%	5W
Irim, Gravelly (CO4413) Typic Haplaquolls.	Frigid	P	0.5–1.5	Apr–Jun	<6.0	Occasional	Brief	Apr–Jun	2B3	0–5%	6C
Jacobsville, Stony (MI0694) Typic Endoaquepts.	Frigid	P	+.5–1.0	Nov–May	<6.0	None			2B3, 3	All	5W
Jacobsville, Very Stony (MI0693) Typic Endoaquepts.	Frigid	P	+.5–1.0	Nov–May	<6.0	None			2B3, 3	All	6S
James, Very Poorly Drained (SD0486) Cumulic Vertic Endoaquolls.	Mesic	VP	0.5–1.0	Oct–Jun	<6.0	Common	Long	Mar–Oct	2B3, 4	PE>44	5W
Kampville (MO0136) Typic Endoaqualfs.	Mesic	P	0–1.0	Nov–May	<6.0	Rare-Occasional	Brief-Long	Mar–June	2B3	All	3W

SOILS ON THE DEC. 95 HYDRIC LIST, BUT NOT ON THE DEC. 93 HYDRIC LIST (ADDITIONS) REVISED DECEMBER 15, 1995—Continued

[The ''Hydric Criteria Number'' Column Indicates What Caused the Soil to be Included in the Hydric List. See the ''Criteria for Hydric Soils'' to Determine the Meaning of This Column]

Series and subgroup	Temperature	Drainage class	High water table		Perm. within 20 inches	Flooding			Hydric criteria number	Capability	
			Depth	Months		Frequency	Duration	Months		Critical phase criteria	Class and subclass
Kanotin (MI0727) Histic Epiaquods.	Frigid	VP	+1–1.0	Oct–May	<6.0	None			2B3,3	Undrained	5W
Kezan, Channeled (NE0235) Mollic Fluvaquents.	Mesic	P	1.0–3.0	Nov–Jun	<6.0	Common	Brief	Mar–Jul	2B3	Channeled Wet	6W 5W
Kezan, MAAT47–53 (NE0232) Mollic Fluvaquents.	Mesic	P	1.0–3.0	Nov–Jun	<6.0	Common	Brief	Mar–Jul	2B3	Freq Occas	4W 4W
Kilgore, Extremely Gravelly (CO3681) Cumulic Cryaquolls.	Cryic	P	1.0–3.0	Jan–Dec	<6.0	Common	V Brief	May–Sep	2B3	0–6%	5W
Kimbles (PA0173) Typic Endoaquepts.	Mesic	P	0–0.5	Oct–Jun	<6.0	None			2B3	All	4W
Liscum (AK0497) Histic Cryaquepts.	Cryic	VP	0–1.0	Jan.–Dec	<6.0	None–Rare			2B3	All	5W
Logan, Moderately Drained (UT0466) Typic Calciaquolls [1].	Mesic	P	1.0–2.5	May–Sep	<6.0	Rare			2B3	0–3%	5W
Logan, Stratifield Substratum (UT2084) Typic Calciaquolls [1].	Mesic	P	1.0–2.5	Mar–Jul	<6.0	Rare			2B3	0–3%	5W
Logan, Stratifield Substratum (UT2100) Typic Calciaquolls[1].	Mesic	VP	0-1.0	Mar–Jul	<6.0	Frequent	V Long	Mar–Jul	2B3, 4	All	7W
Longhope, Ponded (NC0215) Terric Borosaprists.	Frigid	VP	+.5–0.5	Oct–Jun	<6.0	None			1	All	7W
Longmont, Clayey (C03595) Aeric Halaquepts[1].	Mesic	P	1.0–2.0	May–Sep	<6.0	Common	Brief	Mar–Jul	2B3	All	6W
Loup, Poorly Drained (NE0248) Typic Endoaquolls.	Mesic	P	0–1.5	Nov–May	<6.0	None-Rare			2B3	0–2%	5W
Loup, Very Poorly Drained (NE0249) Typic Endoaquolls.	Mesic	VP	+.5–1.0	Nov–Jun	<6.0	None-Rare			2B3,3	All	5W
Lowder, Very Bouldery (MT3080) Typic Cryaquepts.	Cryic	VP	0–1.0	May–Aug	<6.0	Rare			2B3	2–15% 15–25%	6W 6E
Ludden, Very Poorly Drained (ND0447) Typic Endoaquerts.	Frigid	VP	0.5–1.0	Nov–Jul	<6.0	Frequent	Brief-Long	Mar–Jun	2B3, 4	All	5W
Magna, Wet (UT2782) Typic Calciaquolls[1].	Mesic	P	0–2.0	Apr–Aug	<6.0	Occasional	Long	Apr–Jun	2B3	0–1%	5W
Mankomen (AK0413) Histic Pergelic Cryaquepts.	Cryic	VP, P	0.5–1.5	Jan–Dec	<6.0	None			2B3	All	6W
Marlake, Loamy Surface (NE0161) Mollic Psammaquents.	Mesic	VP	+2–1.0	Nov–Jun	<6.0	None			2B3, 3	All	8W
Marlake, Mucky Surface (NE0157) Mollic Psammaquents.	MESIC	VP	+2–1.0	Nov–Jun	<6.0	None			2B3, 3	All	8W
Marlake, Sandy Surface (NE0159) Mollic Psammaquents.	MESIC	VP	+2–1.0	Nov–Jun	>=6.0	None			2B2, 3	All	8W
McCabe (MT1404) Aeric Fluvaquents.	Frigid	P	1.0–2.0	Apr–Jul	<6.0	Occasional	Brief	Apr–Jun	2B3	0–2%	4E

SOILS ON THE DEC. 95 HYDRIC LIST, BUT NOT ON THE DEC. 93 HYDRIC LIST (ADDITIONS) REVISED DECEMBER 15, 1995—Continued

[The ''Hydric Criteria Number'' Column Indicates What Caused the Soil to be Included in the Hydric List. See the ''Criteria for Hydric Soils'' to Determine the Meaning of This Column]

Series and subgroup	Temperature	Drainage class	High water table		Perm. within 20 inches	Flooding			Hydric criteria number	Capability	
			Depth	Months		Frequency	Duration	Months		Critical phase criteria	Class and subclass
McCabe, Heavy Metals (MT1433) aeric Fluvaquents.	Frigid	P	1.0–2.0	Apr–Jul	<6.0	Occasional	Brief	Apr–Jun	2B3	0–2%	7E
McCabe, Moist (MT 1651) Aeric Fluvaquents.	Frigid	P	1.0–2.0	May–Jun	<6.0	Occasional	Brief	Jan–Jun	2B3	0–2%	4W
McGregor (MT 1619) Aquic Eutrochrepts.	MESIC	VP	0–1.0	Apr–Oct	<6.0	Frequent	Long	Apr–Jun	2B3, 4	0–2%	5W
McKeen (ND0437) Typic Fluvaquents.	Frigid	VP	0–1.0	Jan–Dec	<6.0	Common	Long	Apr–Jun	2B3, 4	Undrained	5W
McKeen, Ponded (ND0438).	Frigid	VP	+3.–1.0	Jan–Dec	<6.0	Common	V Long	Apr–Jun	2B3, 3, 4	Undrained	8W
McKenton (MT 1572) Fluvaquentic Endoaquolls.	Frigid	VP	0–1.0	Apr–Aug	<6.0	Rare-Occasional	Brief	Apr–Jun	2B3	0–2%	7S
Meadowpeak (MT 1362) Mollic Fluvaquents.	Frigid	P	1.0–2.0	Apr–Aug	<6.0	Common	Long	Mar–Jun	2B3, 4	0–2% Occas 0.2% Freq	5W 5W
Meaton (TX1004) Typic Argiaquolls.	Hyper-Thermic	SP	0–1.5	Jan–Mar	<6.0	Occasional	V Brief	Sep–Oct	2A	All	4W
Mendenhall, Short FFS (CO3644) Cumulic Cryaquolls.	Cryic	P	0–0.5	Mar–Aug	<6.0	Common	Long	Apr–Jun	2B3, 4	0–4%	6c
Mendna (AK0394) Histic Pergelic Cryaquepts.	Cryic	VP, P	0.–2.0	Jan–Dec	<6.0	None			2B3	All	6W
Mesei (GU0325) Terric Troposaprists.	Isohyper-thermic–	VP	+1 –0.5	Jan–Dec	>6.0	Frequent	V Long	Jan–Dec	1,3,4		
Mollco (TX 1285) Typic Glossaqualfs.	Thermic	VP	+ .5–1.0	Oct–May	<6.0	None			2B3,3	All	6W
Moltoner (MT 1573) Aeric Fluvaquents.	Frigid	P	0.5–2.0	Apr–Aug	<6.0	Rare			2B3	0–2%	7S
Moltoner, Silty Clay Loam Substratum (MT 1524) Aeric Fluvaquents.	Frigid	P	1.0–2.0	Apr–Nov	<6.0	None			2B3	0–2%	6W
Mooreville, Frequently Flooded (MS0132) Fluvaquentic Dystrochrepts [1].	Thermic	MW	1.5–3.0	Jan–Mar	<6.0	Frequent	Long	Jan–Mar	4	Freq	5W
Mooseflat (MT 1521) Typic Cryaquolls.	Cryic	VP	0 –1.0	Apr–Jun	<6.0	Frequent	Brief	Apr–Jun	2B3	0–8%	5W
Mooseflat, Occasionally Flooded (MT 1652) Typic Cryaquolls.	Cryic	VP	0 –1.0	Apr–Jun	<6.0	Rare Occasional	Brief	Apr–Jun	2B3	0–8%	5W
Mosquito (AK0441) Pergelic Ruptic-Histic Cryaquepts.	Cryic	VP	+1 –1.0	Jan–Dec	<6.0	None–rare			2B3,3	0–2%	6W
Moteado, Rubbly (PR0202) Humic Haplaquox.	Isothermic	P	0 –1.0	Jan–Dec	<6.0	None			2B3	3–15% STV 3–15% RB 15–65%	7W 7S 7S
Mountom (CA2713) Terric Medihemists.	Mesic	VP	0 –1.0	Jan–Dec	>=6.0	Frequent	Long	Jan–Dec	1,4	All	6W
Mtsterling (IA0637) Aeric Fluvaquents.	Mesic	P	0 –1.0	Nov–Jul	<6.0	Rare–Common	V Brief-Brief	Sep–Jun	2B3	0–2% Occas Freq	2W 5W
Murrstead (MT1620) Typic Borofibrists.	Frigid	VP	0 –1.0	Apr–Oct	<6.0	Frequent	Long	Apr–Jun	1	0–2%	5W
Nahma, Stony (MI0703) Histic Humaquepts.	Frigid	P	+1 –1.0	Nov–Jun	<6.0	None			2B3,3	All	5W
Naniak (GU0307) Typic Sulfaquents.	Isohyper-thermic	VP	+1 –1.0	Jan–Dec	<6.0	Frequent	V Long	Jan–Dec	2B3,3,4		
Napa, Rarely Flooded (SD0536) Typic Natraquerts.	Mesic	P	0–3.0	Nov–Jul	<6.0				2B3	Map<25 Map>25	6W 4W

SOILS ON THE DEC. 95 HYDRIC LIST, BUT NOT ON THE DEC. 93 HYDRIC LIST (ADDITIONS) REVISED DECEMBER 15, 1995—Continued

[The ''Hydric Criteria Number'' Column Indicates What Caused the Soil to be Included in the Hydric List. See the ''Criteria for Hydric Soils'' to Determine the Meaning of This Column]

Series and subgroup	Temperature	Drainage class	High water table		Perm. within 20 inches	Flooding			Hydric criteria number	Capability	
			Depth	Months		Frequency	Duration	Months		Critical phase criteria	Class and subclass
Newtman (MT1639) Fluvaquentic Endoaquolls.	Frigid	VP	0–1.0	Apr–Aug	<6.0	None-Rare			2B3	0–4%	5W
Ngerungor (GU0335) Typic Sulfihemists.	Isohyper-Thermic	VP	+1–0.5	Jan–Dec	<=6.0	Frequent	V Long	Jan–Dec	1, 3, 4		
Niwot, Cool (CO4039) Typic Haplaquolls [1].	Mesic	P	0.5–1.5	Mar–Jun	<6.0	Rare			2B3	0–2%	3S
Niwot, Wet (CO3596) Typic Haplaquolls [1 3].	Mesic	P, SP	0.5–1.5	Mar–Jun	<6.0	Rare-Common	Brief	Mar–Nov	2B3	All	5W
Northwood, Ponded (MN0702) Histic Humaquepts.	Frigid	VP	+2 –0	Jan–Dec	<6.0	None-Rare			2B3, 3	All	8W
Norway (SD0547) Typic Psammaquents.	Mesic	P	0–1.5	Oct–May	<=6.0	Occasional	Long	Mar–Nov	2B2	All	6W
Norway, Frequently Flooded (SD0548) Typic Psammaquents.	Mesic	VP	0–1.0	Oct–May	<=6.0	Frequent	Long	Mar–Nov	2B2, 4	All	8W
Nuka (AK0464) Terric Borohemists.	Frigid	VP	1.0–0.5	Jan–Dec	<=6.0	None			1		
Occidental (CA2594) Typic Fluvaquents.	Mesic	VP	0–1.0	Jan–Mar	<6.0	Occasional	Brief	Dec–Feb	2B3	0–2%	5W
Okoboji, Stratified Substratum (IA0641) Cumulic Vertic Endoaquolls.	Mesic	VP	+1–1.0	Nov–Jul	<6.0	None			2B3, 3	MK–SIL, MK–SICL SICL, SIC, SIL	3W 3W
Oldham, Wet (SD0563) Cumulic Vertic Epiaquolls.	Frigid	VP	0.5–1.5	Oct–Jun	<6.0	None			2B3	Drained, Wet, PE≤44 Undrained, Wet, PE≤44	3W 5W
Oldtown, Depressional (FL0141) Histic Humaquepts.	Thermic	VP	+2–0	Feb–Oct	<=6.0	None			2B2, 3	All	7W
Oldtown, Flooded (FL0140) Histic Humaquepts.	Thermic	VP	+2 –0	Feb–Oct	>=6.0	Frequent	Long	Feb–Oct	2B2,3,4	All	7W
Olokui (HI0186) Typic Placaquepts.	Isomesic	P	0.5–1.5	Jan–Dec	<6.0	None			2B3	3–30%	7E
Owego, Dry (IA0674) Mollic Fluvaquents.	Mesic	P	1.0–3.0	Nov–Jul	<6.0	Rare			2B3	All	3W
Parle (MN0728) Cumulic Endoaquolls.	Frigid	P	0.5–1.5	Mar–Jul	<6.0	None			2B3	All	2W
Parsons (OK0011) Mollic Albaqualfs.	Thermic	P	0.5–1.5	Dec–Apr	<6.0	None			2B3	0–1% 1–3% 1–3% Eroded	2S 3E 4E
Paupack (PA0180) Terric Medisaprists.	Mesic	VP	1.0–0	Sep–Jun	<6.0	None			1	All	5W
Petrolia, Undrained (IL0466) Typic Fluvaquents.	Mesic	P,VP	+2 –0	Dec–Jun	<6.0	Rare-Common	Long-V Long	Dec–Jun	2b3,3,4	Undrained	5W
Piopolis, Undrained (IL0467) Typic Fluvaquents.	Mesic	VP	+2 –0	Dec–Jun	<6.0	Rare-Common	Long-V Long	Dec–Jun	2B3,3,4	Undrained	5W
Pleine, Very Stony (MI0707) Histic Humaquepts.	Frigid	P	0 –0.5	Nov–Jun	<6.0	Frequent	Long	Nov–May	2B3,4	All	6S

SOILS ON THE DEC. 95 HYDRIC LIST, BUT NOT ON THE DEC. 93 HYDRIC LIST (ADDITIONS) REVISED DECEMBER 15, 1995—Continued

[The ''Hydric Criteria Number'' Column Indicates What Caused the Soil to be Included in the Hydric List. See the ''Criteria for Hydric Soils'' to Determine the Meaning of This Column]

Series and subgroup	Temperature	Drainage class	High water table		Perm. within 20 inches	Flooding			Hydric criteria number	Capability	
			Depth	Months		Frequency	Duration	Months		Critical phase criteria	Class and subclass
Poganeab, Loamy Surface (UT2009) Typic Fluvaquents [1].	Mesic	P	1.0–3.0	May–Aug	<6.0	Occasional	Brief	Apr–Jun	2B3	All	6W
Portage, Poorly Drained (M00361) Vertic Endoaquolls.	Mesic	P	0 –1.0	Nov–Jun	<6.0	Rare-Common	Brief-Long	Mar–Jul	2B3,4	Rare Occas Freq, Brief Freq, Long	3W 3W 4W 5W
Prieto, Rubbly (PR0207) Typic Tropaquepts.	Isohyperthermic	P	0 – 1.0	Jan–Dec	<6.0	None			2B3	All	7S
Prinsburg (MN0749) Typic Endoaquolls.	Mesic	P	0.5–1.5	Nov–Jun	<6.0	None			2B3	All	2W
Provo Bay, Loamy Subsoil (UT 1937) Typic Calciaquolls.	Mesic	P, VP	0–1.0	Jan–Dec	<6.0	Frequent	V Long	Apr–Jul	2B3, 4	Sicl PT-Sil	5W 8W
Purnell (MD0171) Histic Sulfaquents.	Mesic	VP	+1 –0	Jan–Dec	<6.0	Frequent	V Brief	Jan–Dec	2B3, 3	All	8W
Racoon, Undrained (IL0460) Typic Endoaqualfs.	Mesic	P	+1 –0.5	Jan–Jun	<6.0	Rare-Occasional	Brief	Mar–May	2B3, 3	All	5W
Rauville Ponded (SD0588) Cumulic Endoaquolls.	Frigid	VP	2.0–0.5	Jan–Dec	<6.0	Frequent	Long	Mar–Oct	4	All	8W
Raveenwash (IL0455) Aquic Udifluvents [2].	Mesic	SP	1.0–2.0	Nov–Jun	<6.0	Frequent	Long	Nov–Jun	4	Freq	3W
Regan, Warm (ND0449) Typic Calciaquolls.	Frigid	VP, P	0–1.5	Oct–Jun	<6.0	Common	Brief-Long	Mar–Jun	2B3, 4	Wet Dry	5W 4W
Rollaway (MI0743) Histic Humaquepts.	Frigid	P, VP	+2 –1.0	Jan–Dec	<6.0	Frequent	Brief-V Long	Mar–May	2B3, 3, 4	All	5W
Rosane (CO4075) Typic Cryaquolls.	Cryic	P	0.5–2.0	Apr–Aug	<6.0	Occasional	Brief	May–Aug	2B3	0–3% Warm	6W 5C
Rosane, Flooded (CO3865) Typic Cryaquolls.	Cryic	P	0.5–2.0	Apr–AUg	<6.0	Frequent	Brief	May–Aug	2B3	1–5%	6W
Rosane, High PPT (CO3682) Typic Cryaquolls.	Cryic	P	0.5–2.0	Apr–Aug	<6.0	Common	Brief	May–Aug	2B3	0–8%	6C
Rushriver (MN0750) Mollic Fluvaquents.	Mesic	P	0.5–1.5	Nov–Aug	<6.0	Common	Brief	Feb–Jun	2B3	Freq Occas	5W 2W
Salt Lake, Gypsiferous Substratum (UT1951) Typic Calciaquolls [1].	Mesic	MW	3.0–4.0	Apr–Aug	<6.0	Frequent	Long	Apr–Jun	4	All	5W
Saltair, Saline (UT2087) Typic Salorthids [1].	Mesic	VP	0–1.0	Mar–Oct	<6.0	Occasional	Long	Feb–Sep	2B1	Str Saline	8X
Saltair, Wet (UT2038) Typic Salorthids [1].	Mesic	P	0–1.0	Mar–Jun	<6.0	Rare-Common	Long	Feb–Sep	2B3, 4	Str Saline	8S
Saltair, Wet (UT2792) Typic Salorthids [1].	Mesic	P	0 – 1.0	Mar–Oct	<6.0	Occasional	Long	Feb–Sep	2B3	Str Saline	8S
Saltillo (NE0434) Typic Halaquepts.	Mesic	P	0 <1.5	Nov–Jul	<6.0	Common	Brief	Apr–Jul	2B3	All	6S
San Luis, Wet (CO3597) Aquic Natratgids [1].	Frigid	SP	0 – 2.0	May–Aug	<6.0	None			2A	0–1%	7S
Sandwick (MN0348) Arenic Glossaqualfs.	Frigid	P	0.5 – 1.5	Apr–Jun	<=6.0	None			2B2	LFS, LS FS, S	3W 4W
Sandy Point (VI0017) Thapto-Histic Tropic Fluvaquents.	Isohyper-Thermic	VP	+1 – 0.5	Apr–Dec	<6.0	Frequent	V Long	Apr–Dec	2B3, 3, 4	All	8W
Sawatch, Gravelly (CO3867) Histic Haploquolls.	Frigid	P	0 – 1.0	Mar–Sep	<6.0	Occasional	Long	Apr–Jun	2B3	1–5%	6W

SOILS ON THE DEC. 95 HYDRIC LIST, BUT NOT ON THE DEC. 93 HYDRIC LIST (ADDITIONS) REVISED DECEMBER 15, 1995—Continued

[The ''Hydric Criteria Number'' Column Indicates What Caused the Soil to be Included in the Hydric List. See the ''Criteria for Hydric Soils'' to Determine the Meaning of This Column]

Series and subgroup	Temperature	Drainage class	High water table		Perm. within 20 inches	Flooding			Hydric criteria number	Capability	
			Depth	Months		Frequency	Duration	Months		Critical phase criteria	Class and subclass
Schrader, Stratified (CO3586) Cumulic Haplaquolls.	Frigid	P	1.0 – 2.0	Apr–Aug	<6.0	Frequent	Brief	Apr–Jul	2B3	0–3%	6W
Schrader, Stratified (CO4454) Cumulic Haplaquolls.	Frigid	P	1.0 – 1.5	May–Jul	<6.0	Common	Brief	Apr–Jul	2B3	0–5%	4C
Scott, Drained (NE0379) Typic Argialbolls.	Mesic	SP	0 – 2.0	Mar–Aug	<6.0	None			2A	All	3W
Scribner, Frequently Flooded (CA2454) Cumulic Haplaquolls [1 2].	Thermic	SP	1.5 – 3.0	Dec–Apr	<6.0	Frequent	Long	Dec–Apr	4	Freq	4W
Seelyeville, Frequently Flooded (MN0733) Typic Borosaprists.	Frigid	VP	0 – 2.0	Oct–Jun	<6.0	Frequent	Long	Nov–May	1	All	6W
Shiloh, Undrained (IL0461) Vertic Endoaquolls.	Mesic	VP	+1 – 0	Jan–Jun	<6.0	None			2B3, 3	Undrained	5W
Slacwater (IL0457) Typic Hapludalfs.	Mesic	P	+.5 – 1.0	Nov–Jun	<6.0	Frequent	Long-V Long	Nov–Jun	3, 4	Drained Undrained	2W 5W
Smithland (IA0633) Aquic Cumulic Hapludolls [2].	Mesic	SP	2.0–4.0	Nov–Jul	<6.0	Frequent	Long	Feb–Nov	4	Freq, Long	5W
Springport (MI0542) Typic Epiaquolls.	Frigid	P	+1 –1.0	Oct–Jun	<6.0	None			2B3, 3	Drained Undrained	3W 5W
Springport, Mucky Surface (MI0126) Typic Epiaquolls.	Frigid	P	+1 –1.0	Oct–Jun	<6.0	None			2B3, 3	Drained Undrained	3W 5W
Stamp (ID1322) Aquic Cryochrepts.	Cryic	SP	0–3.0	Jan–Jun	<6.0	Rare			2A	0–4%	4W
Stinkcreek (ID1955) Aeric Calciaquolls.	Mesic	P	0–1.5	Feb–Jun	<6.0	Rare			2B3	0–2%	5W
Sugar Beach (VI0021) Fluvaquentic Troposaprists.	Isohyper Thermic	VP	+1 –0.5	Apr–Dec	<6.0	Frequent	V Long	Apr–Dec	1, 2B3, 3, 4–	All	8W
Suntrana (AK0290) Andic Cryaquods.	Cryic	P	1.0–2.0	Jan–Dec	<6.0	None			2B3	2–7%	5W
Sweagert, Thick Substratum (CA9409) Typic Durixerolls [1].	Mesic	MW	+.5 –3.0	Dec–Apr	<6.0	None			3	2–5%	4W
Swedna (AK0396) Typic Cryaquents.	Cryic	VP, P	0.–1.5	Apr–Oct	<6.0	Common	Brief-Long	Apr–Oct	2B3, 4	0–3%	5W
Tanacross (AK0496) Histic Pergelic Cryaquepts.	Cryic	P	0–1.0	Jan–Dec	<6.0	None-Rare			2B3	0–5%	5W
Tangoe, Wet (AK0482) Oxyaquic Cryorthents [1].	Cryic	VP, P	0–1.5	May–Oct	>=6.0	Common	Brief	May–Sep	2B1	0–8%	6S
Tanwax, Drained (WA0838) Limnic Medisaprists.	Mesic	P	1.5–3.0	Oct–May	<6.0	None			1	All	4W
Teneb (ID1905) Aquandic Epiaqualfs.	Frigid	P	+.5 –1.0	Feb–May	<6.0	Occasional	Brief	Mar–May	2B3, 3	0–2%	4W
Threefork (MT1640) Fluvaquentic Endoaquolls.	Frigid	VP	0–1.0	Apr–Jun	<6.0	Rare-Occasional	Brief	Apr–Jun	2B3	0–2%	5W
Tieville (IA0632) Vertic Endoaquolls.	Mesic	P	0–1.0	Nov–Jul	<6.0	Rare			2B3	All	3W
Tilfer, Soft Bedrock (IA0655) Typic Haplaquolls.	Mesic	P, VP	0–2.0	Nov–Jul	<6.0	Occasional	Brief	Feb–Nov	2B3	All	3W

SOILS ON THE DEC. 95 HYDRIC LIST, BUT NOT ON THE DEC. 93 HYDRIC LIST (ADDITIONS) REVISED DECEMBER 15, 1995—Continued

[The ''Hydric Criteria Number'' Column Indicates What Caused the Soil to be Included in the Hydric List. See the ''Criteria for Hydric Soils'' to Determine the Meaning of This Column]

Series and subgroup	Temperature	Drainage class	High water table		Perm. within 20 inches	Flooding			Hydric criteria number	Capability	
			Depth	Months		Frequency	Duration	Months		Critical phase criteria	Class and subclass
Tobico, Loamy Surface (MI0723) Mollic Psammaquents.	Mesic	P	+1 –1.0	Sep–Jun	<6.0	None			2B3, 3	Drained Undrained	3W 5W
Tobico, Mucky Surface (MI0722) Mollic Psammaquents.	Mesic	P	+1 –1.0	Sep–Jun	<6.0	None			2B3,3	Drained Undrained	3W 5W
Torsido, Stratified (CO4693) Typic Argiaquolls.	Frigid	P	1.0–2.0	Apr–Aug	<6.0	None			2B3	0–3%	6W
Tughill, Mucky Surface (NY0162) Histic Humaquepts.	Frigid	VP	+1 –0.5	Nov–Jun	<6.0	None			2B3, 3	All	5W
Tujunga, Overwash (CA2686) Typic Xeropsamments [1].	Thermic	SE	>6.0		<6.0	Frequent	Long	Dec–Apr	4	0–2%	6W
Uturin (IA0634) Mollic Fluvaquents.	Mesic	P	0–1.0	Nov–Jul	<6.0	Common	Brief	Feb–Nov	2B3	All	3W
Vasquez, Cool (CO3888) Humic Pergelic Cryaquepts.	Cryic	P	0.5–2.0	Mar–Jul	<6.0	None			2B3	5–25% 25–30%	6E 7E
Vastine, Stratified Substratum (CO4408) Typic Endoaquolls.	Frigid	P	1.0–2.0	May–Jul	<6.0	Occasional	Brief	May–Jul	2B3	0–5%	4C
Venable, Warm (CO4081) Cumulic Cryaquolls.	Cryic	P	1.0–2.5	Apr–Aug	<6.0	Occasional	V Brief	Apr–Jun	2B3	0–5% 5–9%	5W 6E
Villard (MT1211) Typic Endoaquepts.	Frigid	P	1.0–3.0	May–Sep	<6.0	Common	Brief	Mar–Jun	2B3	All	6W
Vina, Frequently Flooded (CA2684) Cumulic Haploxerolls [1].	Thermic	W	>6.0		<6.0	Frequent	Long	Dec–Apr	4	0–2%	4W
Viterbo (TX1007) Chromic vertic Epiaqualfs.	Hyperthermic	SP	0 – 1.5	Dec–Apr	<6.0	None			2A	All	4W
Wabun (MI0729) Mollic Psammaquents.	Frigid	P, VP	+1 – 1.0	Oct–May	>=6.0	None			2B1, 3	All	5W
Wacousta, Stratified Substratum (IA0687) Typic Endoaquolls.	Mesic	VP	+1 – 1.0	Nov–Jul	<6.0	Occasional	Brief	Mar–Sep	2B3, 3	Drained Undrained	3W 5W
Wapato, High Precipitation (OR1628) Fluvaquentic Endoaquolls [1].	Mesic	P	+1 – 1.0	Nov–May	<6.0	Frequent	Brief	Dec–Apr	2B3, 3	All	3W
Wasson (OR1067) Fluvaquentic Humaquepts.	Mesic	P	0 – 2.0	Nov–Mar	<6.0	Occasional	Brief	Nov–Mar	2B3	All	3W
Watterson, Wet (CA2720) Xeric Torriorthents [1].	Mesic	W	0.5–1.5	May–Aug	<6.0	Frequent	Long	May–Aug	4	All	6E
Webster, Stratified Substratum (IA0640) Typic Endoaquolls.	Mesic	P	0 – 1.0	Nov–Jul	<6.0	None			2B3	All	2W
Wekiva, Depressional (FL0142) Aeric Endoaqualfs.	Thermic	VP	+2 – 0	Jan–Sep	<6.0	None			2B3, 3	All	7W
Weott (CA2592) Aeric Fluvaquents.	Mesic	VP	0 – 1.0	Jan–Mar	<6.0	Occasional	Brief	Dec–Feb	2B3	0–2%	6W
Wetsand (MT1139) Aeric Fluvaquents.	Frigid	P	1.0–1.5	May–Sep	<6.0	Rare-Occasional	Brief	Mar–Jun	2B3	0–2%	6W

SOILS ON THE DEC. 95 HYDRIC LIST, BUT NOT ON THE DEC. 93 HYDRIC LIST (ADDITIONS) REVISED DECEMBER 15, 1995—Continued

[The ''Hydric Criteria Number'' Column Indicates What Caused the Soil to be Included in the Hydric List. See the ''Criteria for Hydric Soils'' to Determine the Meaning of This Column]

Series and subgroup	Temperature	Drainage class	High water table		Perm. within 20 inches	Flooding			Hydric criteria number	Capability	
			Depth	Months		Frequency	Duration	Months		Critical phase criteria	Class and subclass
Wetsand, Rarely Flooded (MT1337) Aeric Fluvaquents.	Frigid	P	1.0–2.0	May–Sep	<6.0	None-Rare			2B3	0–2%	4W
Wetsand, Saline (MT1706) Aeric Fluvaquents.	Frigid	P	1.0–1.5	May–Sep	<6.0	Rare			2B3	0–2%	6W
Wetvit (NV2836) Aquandic Endoaquolls.	Mesic	VP	0 −1.0	Jan–May	<6.0	Frequent	Long	Jan–May	2B3,4	All	5W
Wetvit, Occasionally flooded (NV2837) Aquandic Endoaquolls.	Mesic	VP	1.0–1.5	Jan–May	<6.0	Occasional	Brief	Jan–May	2B3	All	5W
[2] Wichup, Cool (CO4217) Histic Cryaquolls.	Cryic	P	0 −0.5	Apr–May	<6.0	Frequent	Long	May–Jun	4	Freq	6W
[2] Wichup, Short FFS (CO3651) Histic Cryaquolls.	Cryic	P	0 −0.5	Apr–May	<6.0	Frequent	Long	May–Jun	4		
Wildwood, Ponded (MN0714) Histic Humaquepts.	Frigid	VP	+2−−0	Jan–Dec	<6.0	None			2B3, 3	All	8W
[1] Willows, Frequently Flooded (CA2671) Typic Pelloxererts.	Thermic	P	4.0–6.0	Dec–Apr	<6.0	Frequent	Long	Dec–Apr	4	Freq	4W
Witbeck, Extremely Bouldery (MI0718) Histic Humaquepts.	Frigid	P	+.5–1.0	Nov–Jun	<6.0	None			2B3, 3	All	7S
Witbeck, Very Bouldery (MI0717) Histic Humaquepts.	Frigid	P	+.5–1.0	Nov–Jun	<6.0	None			2B3, 3	All	7S
Worswick (CA2593) Aeric Fluvaquents.	Mesic	VP	0–1.0	Jan–Mar	<6.0	Occasional	Brief	Jan–Feb	2B3	0–2%	5W
Worthing, Poorly Drained (SD0584) Vertic Argiaquolls.	Mesic	P	+1 −1.0	Jan–Dec	<6.0	None			2B3, 3	Drained, PE>44 Undrained Drained, PE31–44	3W 5W 3W
Yearian, Rare (ID1882) Typic Haplaquolls.	Frigid	P	0.5–1.5	Apr–Jun	<6.0	Rare			2B3	0–8%	6W
Zekiah (MD0172) Typic Fluvaquents.	Mesic	P	0 −1.0	Sep–June	<6.0	Frequent	Brief	Jan–Dec	2B3	All	5W
Zook (IA0665) Cumulic Vertic Endoaquolls.	Mesic	P	0 −1.0	Nov–Jul	<6.0	Rare			2B3	Rare	2W

[1] Some soil interpretation records representing phases of this series are not hydric.
[2] Some phases of this soil are not frequently flooded of long duration.
[3] Some drainage classes for this soil are not hydric.

SOILS ON THE DEC. 93 HYDRIC LIST, BUT NOT ON THE DEC. 95 HYDRIC LIST (DELETIONS) REVISED DECEMBER 15, 1995

[The "Hydric Criteria Number" Column Indicates What Caused the Soil to be Included in the Hydric List. See the "Criteria for Hydric Soils" to Determine the Meaning of This Column.]

Series and Subgroup	Temperature	Drainage class	High water table		Perm. within 20 inches	Flooding			Hydric criteria number	Capability	
			Depth	Months		Frequency	Duration	Months		Critical phase criteria	Class and sub-class
Chia (HI0318) [4]											
Dechel (HI0323) [4]											
Fannet (TX1173) [4]											
Freer (MN0178) Aeric Glossaqualfs	Frigid	SP	1.0 – 2.0	Nov–Jun	<6.0	None				0 – 3%	2W
										0 – 3% Rocky	6S
Ilachetomel (HI0324) [4]											
Inkosr (HI0353) [4]											
Insak (HI0354) [4]											
Keewatin (MN0333) Aeric Glossaqualfs	Frigid	SP	0.5 – 1.5	Oct–Jun	<6.0	None				ALL	3W
Klossner, Sandy Substratum (MN0601) [4]											
Konner (WA0296) Cumulic Haplaquolls	Mesic	SP	1.0 – 2.0	Feb–May	<6.0	Occasional	Brief	Feb–May		ALL	6W
Latah, Drained (WA0953) Xeric Argialbolls	Mesic	SP	2.0 – 4.0	Dec–Apr	<6.0	Common	Brief	Dec–Apr		Occas	3W
										Freq	4W
Leslie (MO0168)	Mesic	SP	1.0 – 2.0	Nov–May	<6.0	None				1–5%	2E
										5–9% Eroded	3E
										1.5% Eroded	2E
Mesei (HI0325) [4]											
Mooreville (MS0099) Fluvaquentic Dystrochrepts	Thermic	MW	1.5 – 3.0	Jan–Mar	<6.0	Common	V Brief-Brief	Jan–Mar		Occas	2W
										Freq	5
Naniak (HI0307) [4]											
Ngerungor (HI0335) [4]											
Ogemaw (MI0231) Aquentic Haplorthods	Frigid	SP	0.5 – 1.5	Oct–May	<6.0	None				Drained	4W
										Undrained	5W
Platte, Channeled (NE0146) Aeric Fluvaquents	Mesic	SP	1.0 – 3.0	Mar–Apr	<6.0	Common	Brief	Mar–May		Occas	6W
										Freq	7W
Polawana (SC0032) [4]											
Shields (MN0091) Vertic Epiaqualfs	Mesic	P	0.5 – 1.5	Apr–Jun	<6.0	None				ALL	3W
Steed, Loamy (UT1902) Entic Haploxerolls	Mesic	W	>4.0	Apr–Jun	<6.0	Occasional	Long	Mar–Jun		L	6S
										CB–L	6S
Stornetta (CA2079) Aquic Ustifluvents	Isomesic	MW	0 – 1.0	Dec–Apr	<6.0	Frequent	Brief	Dec–Apr		ALL	4W
Talmoon, Stratified Substratum (MN0664) [4]											
Vastine, Saline-Alkali (CO0636) Typic Endoaquolls	Frigid	P	2.0 – 3.5	Apr–Sep	<6.0	Occasional	Brief	May–Jun		0–1%	7S
Wekoda, Flooded (CA2456) S.C.[4]											

[1] Some soil interpretation records representing phases of this series are not Hydric.
[2] Some phases of this soil are not frequently flooded of long duration.
[3] Some drainage classes for this soil are not Hydric
[4] This soil record has been removed from the database since it last appeared in the Hydric list.

[FR Doc. 96–14142 Filed 6–6–96; 8:45 am]
BILLING CODE 3410–16–M

Rural Utilities Service

Electric Borrowers Exempt From Certain RUS Operational Controls Under Section 306E of the RE Act

AGENCY: Rural Utilities Service, USDA.

ACTION: Notice and list of electric borrowers exempt from certain RUS operational controls under section 306E of the RE Act.

SUMMARY: Section 306E of the Rural Electrification Act of 1936, as amended (7 U.S.C. 936e) directs the Administrator of the Rural Utilities Service (RUS) to minimize RUS approval rights, requirements, restrictions, and prohibitions imposed on operations of electric borrowers whose net worth exceeds 110 percent of the outstanding loans made or guaranteed to the borrower by RUS. This notice lists the borrowers that meet this test.

DATES: These exemptions are effective beginning June 7, 1996.

FOR FURTHER INFORMATION CONTACT: General information about this notice is available from Sue Arnold, Financial Analyst, U.S. Department of Agriculture, Rural Utilities Service, room 2230-s, 14th Street & Independence Avenue, SW. AgBox 1522, Washington, DC 20250–1522. Telephone: 202–720–0736. FAX: 202–720–4120. E-mail: Sarnold@rus.usda.gov.

Individual borrowers may obtain information specific to their companies from the Director of the appropriate Regional Office, or from the Director, Power Supply Division.

SUPPLEMENTARY INFORMATION: Section 306E of the Rural Electrification Act of 1936, as amended (7 U.S.C. 306e) directs the Administrator of the Rural Utilities Service (RUS) to minimize RUS approval rights, requirements, restrictions, and prohibitions imposed on operations of electric borrowers whose net worth exceeds 110 percent of the outstanding loans made or guaranteed to the borrower by RUS. RUS regulations implementing Section 306E, including the method of calculating the ratio, are published at 7 CFR 1710.7. As amended December 29, 1995, at 60 FR 67396, these regulations require RUS to notify borrowers in writing as whether they qualify for exemption.

Pursuant to 7 CFR 1710.7, the following electric borrowers will be exempted from approval rights, requirements, restrictions, and prohibitions imposed on operations of electric borrowers listed in the rule.

The exemption will apply until the borrower is notified in writing by RUS.

AL 18
AL 19
AL 20
AL 23
AL 25
AL 26
AL 27
AL 28
AL 29
AL 32
AL 35
AL 36
AL 39
AL 44
AL 47
AL 48
AK 10
AK 30
AR 09
AR 11
AR 13
AR 22
AR 23
AR 24
AR 27
AR 31
AZ 23
AZ 27
AZ 30
CA 06
CO 07
CO 14
CO 15
CO 18
CO 20
CO 25
CO 31
CO 33
CO 34
CO 39
CO 40
CO 42
DE 02
FL 14
FL 17
FL 22
FL 23
FL 24
FL 29
FL 30
GA 07
GA 17
GA 22
GA 31
GA 34
GA 37
GA 39
GA 42
GA 45
GA 58
GA 66
GA 67
GA 68
GA 69
GA 73
GA 74
GA 75
GA 78
GA 86
GA 87
GA 90
GA 91
GA 95
GA 97
GA 98
IA 05
IA 30
IA 31
IA 32
IA 33
IA 34
IA 36
IA 40
IA 50
IA 51
IA 52
IA 56
IA 57
IA 67
IA 69
IA 70
IA 74
IA 82
IA 92
IA 94
IA 95
ID 16
ID 17
ID 19
ID 23
IL 02
IL 07
IL 08
IL 32
IL 34
IL 37
IL 39
IL 40
IL 43
IL 45
IL 48
IN 01
IN 07
IN 08
IN 09
IN 14
IN 18
IN 26
IN 27
IN 29
IN 32
IN 35
IN 37
IN 38
IN 40
IN 41
IN 42
IN 47
IN 52
IN 55
IN 60
IN 70
IN 81
IN 83
IN 87
IN 89
IN 92
IN 99
IN 100
IN 108
IN 109
KS 13
KS 15
KS 18
KS 21
KS 22
KS 30

KS 31
KS 41
KS 44
KS 56
KY 20
KY 23
KY 26
KY 27
KY 30
KY 33
KY 34
KY 38
KY 40
KY 45
KY 50
KY 51
KY 52
KY 54
KY 55
KY 56
KY 57
KY 58
LA 06
LA 09
LA 12
LA 17
MI 26
MI 45
MN 01
MN 03
MN 04
MN 10
MN 12
MN 25
MN 32
MN 34
MN 35
MN 37
MN 55
MN 56
MN 57
MN 58
MN 59
MN 61
MN 62
MN 63
MN 66
MN 72
MN 73
MN 74
MN 80
MN 81
MN 82
MN 83
MN 85
MN 87
MN 92
MN 95
MN 97
MN 101
MN 108
MO 12
MO 19
MO 20
MO 23
MO 24
MO 27
MO 30
MO 32
MO 33
MO 34
MO 35
MO 36
MO 38
MO 40
MO 41
MO 42
MO 43
MO 44
MO 45
MO 50
MO 51
MO 53
MO 54
MO 55
MO 56
MO 58
MO 66
MO 67
MO 68
MO 69
MO 70
MO 71
MS 01
MS 21
MS 22
MS 23
MS 24
MS 26
MS 28
MS 29
MS 30
MS 31
MS 36
MS 39
MS 40
MS 41
MS 43
MS 45
MS 48
MS 49
MS 50
MS 57
MT 31
MT 36
MT 40
NC 14
NC 16
NC 21
NC 23
NC 31
NC 34
NC 36
NC 38
NC 39
NC 40
NC 46
NC 49
NC 50
NC 51
NC 52
NC 55
NC 58
NC 66
NC 68
ND 20
ND 38
ND 48
NE 03
NE 04
NE 51
NE 59
NE 62
NE 63
NE 65
NE 66
NE 77
NE 78
NE 85
NM 04
NM 15
NM 19
NM 22
NM 23
NM 26
NM 28
NV 04
NV 15
NY 19
NY 20
NY 24
OH 01
OH 24
OH 30
OH 31
OH 33
OH 42
OH 50
OH 55
OH 56
OH 59
OH 60
OH 65
OH 71
OH 74
OH 75
OH 83
OH 84
OH 85
OH 86
OH 87
OH 88
OH 93
PA 04
PA 06
PA 19
PA 20
PA 21
PA 24
OK 20
OK 30
OK 33
OR 02
OR 04
OR 14
OR 18
OR 21
OR 24
OR 26
OR 29
OR 39
OR 41
SC 19
SC 26
SC 28
SC 29
SC 34
SD 26
TN 01
TN 09
TN 16
TN 17
TN 19
TN 20
TN 21
TN 23
TN 24
TN 25
TN 26
TN 31
TN 32
TN 34
TN 35
TN 36
TN 37
TN 38
TN 45
TN 46

TN 48
TN 49
TN 51
TN 60
TN 61
TX 07
TX 21
TX 30
TX 38
TX 40
TX 41
TX 50
TX 53
TX 54
TX 55
TX 56
TX 60
TX 63
TX 64
TX 65
TX 67
TX 69
TX 71
TX 72
TX 77
TX 87
TX 91
TX 93
TX 96
TX 99
TX 102
TX 114
TX 118
TX 123
TX 124
TX 125
TX 145
UT 08
UT 11
UT 20
VA 28
VA 31
VA 36
VA 37
VA 54
VA 55
WA 09
WA 17
WA 20
WA 32
WA 39
WA 46
WA 48
WI 16
WI 19
WI 21
WI 25
WI 29
WI 32
WI 37
WI 38
WI 41
WI 43
WI 47
WI 49
WI 51
WI 52
WI 53
WI 54
WI 55
WI 59
WI 66
WY 03
WY 05
WY 12
WY 14
WY 21
WY 22
WY 25

Dated: May 31, 1996.

Blaine D. Stockton, Jr.,

Acting Administrator.

[FR Doc. 96–14345 Filed 6–6–96; 8:45 am]

BILLING CODE 3410–15–P

ARCTIC RESEARCH COMMISSION

Notice of Meeting

May 30, 1996.

Notice is hereby given that the U.S. Arctic Research Commission will hold its 43rd Meeting in Arlington, VA on June 20 and 21, 1996. On the morning of Thursday, June 20, the Commission will meet with the U.S. Geological Survey in Reston, VA to review USGS programs (this meeting is open to the public). A Business Session open to the public will convene at 1:00 p.m. in the Holiday Inn, Ballston. Agenda items include:

(1) Call to order and approval of the Agenda.

(2) Approval of the minutes of the 42nd Meeting.

(3) Reports of Congressional Liaisons.

(4) Agency Reports.

On Friday, June 21, the Business Session will continue. Agenda items include:

(5) A general discussion of the Arctic Environmental Protection Strategy and the negotiations leading toward and Arctic Council.

(6) Information Items

(a) The Canadian Polar Continental Shelf

(b) The Detection of Whales by Passive SONAR

The business meeting will be followed by an Executive Session followed by adjournment of the 43nd Meeting.

Any person planning to attend this meeting who requires special accessibility features and/or auxiliary aids, such as sign language interpreters must inform the Commission in advance of those needs.

Contact Person for More Information: Dr. Garrett W. Brass, Executive Director, Arctic Research Commission, 703–525–0111 or TDD 703–306–0090.

Garrett W. Brass,

Executive Director.

[FR Doc. 96–14335 Filed 6–6–96; 8:45 am]

BILLING CODE 7555–01–M

DEPARTMENT OF COMMERCE

International Trade Administration

Intent to Revoke Antidumping Duty Orders and Findings and to Terminate Suspended Investigations

AGENCY: Import Administration, International Trade Administration, Department of Commerce.

ACTION: Notice of intent to revoke antidumping duty orders and findings and to terminate suspended investigations.

SUMMARY: The Department of Commerce (the Department) is notifying the public of its intent to revoke the antidumping duty orders and findings and to terminate the suspended investigations listed below. Domestic interested parties who object to these revocations and terminations must submit their comments in writing no later than the last day of June 1996.

EFFECTIVE DATE: June 7, 1996.

FOR FURTHER INFORMATION CONTACT: Michael Panfeld or the analyst listed under Antidumping Proceeding at: Office of Antidumping Compliance, Import Administration, International Trade Administration, U.S. Department of Commerce, 14th Street & Constitution Avenue, N.W., Washington, D.C. 20230, telephone (202) 482–4737.

SUPPLEMENTARY INFORMATION:

Background

The Department may revoke an antidumping duty order or finding or terminate a suspended investigation if the Secretary of Commerce concludes that it is no longer of interest to interested parties. Accordingly, as required by § 353.25(d)(4) of the Department's regulations, we are notifying the public of our intent to revoke the following antidumping duty orders and findings and to terminate the suspended investigations for which the Department has not received a request to conduct an administrative review for the most recent four consecutive annual anniversary months:

Antidumping Proceeding

Belgium

Sugar

A–423–077
44 FR 33878
June 13, 1979
Contact: Lyn Johnson at (202) 482–5287

France

Sugar

A–427–078

44 FR 33878
June 13, 1979
Contact: Lyn Johnson at (202) 482–5287

Germany

Industrial Belts and Components and Parts Thereof, Whether Cured or Uncured, Except Synchronous & V belts

A–428–802
54 FR 25316
June 14, 1989
Contact: Ron Trentham at (202) 482–4793

Germany

Precipitated Barium Carbonate

A–428–061
46 FR 32884
June 25, 1981
Contact: Tom Futtner at (202) 482–3814

Germany

Sugar

A–428–082
44 FR 33878
June 13, 1979
Contact: Mark Ross at (202) 482–4852

Italy

Industrial Belts and Components and Parts Thereof, Whether Cured or Uncured

A–475–802
54 FR 25313
June 14, 1989
Contact: Ron Trentham at (202) 482–4793

Japan

Nitrile Rubber

A–588–706
53 FR 22553
June 16, 1988
Contact: Sheila Forbes at (202) 482–5253

Sweden

Stainless Steel Plate

A–401–040
38 FR 15079
June 8, 1973
Contact: Michael Heaney at (202) 482–4475

Taiwan

Carbon Steel Plate

A–583–080
44 FR 33877
June 13, 1979
Contact: Michael Heaney at (202) 482–4475

Taiwan

Oil Country Tubular Goods

A–583–505
51 FR 22098
June 18, 1986
Contact: Michael Heaney at (202) 482–4475

If no interested party requests an administrative review in accordance with the Department's notice of opportunity to request administrative review, and no domestic interested party objects to the Department's intent to revoke or terminate pursuant to this notice, we shall conclude that the antidumping duty orders, findings, and suspended investigations are no longer of interest to interested parties and shall proceed with the revocation or termination.

Opportunity To Object

Domestic interested parties, as defined in § 353.2(k) (3), (4), (5), and (6) of the Department's regulations, may object to the Department's intent to revoke these antidumping duty orders and findings or to terminate the suspended investigations by the last day of June 1996. Any submission to the Department must contain the name and case number of the proceeding and a statement that explains how the objecting party qualifies as a domestic interested party under § 353.2(k) (3), (4), (5), and (6) of the Department's regulations.

Seven copies of such objections should be submitted to the Assistant Secretary for Import Administration, International Trade Administration, Room B–099, U.S. Department of Commerce, Washington, D.C. 20230. You must also include the pertinent certification(s) in accordance with § 353.31(g) and § 353.31(i) of the Department's regulations. In addition, the Department requests that a copy of the objection be sent to Michael F. Panfeld in Room 4203.

This notice is in accordance with 19 CFR 353.25(d)(4)(i).

Dated: May 29, 1996.

Joseph A. Spetrini,

Deputy Assistant Secretary for Compliance.

[FR Doc. 96–14310 Filed 6–6–96; 8:45 am]

BILLING CODE 3510–DS–P

[A–570–845, A–570–846]

Notice of Postponement of Preliminary Determinations: Antidumping Duty Investigations of Certain Brake Drums and Certain Brake Rotors From the People's Republic of China

AGENCY: Import Administration, International Trade Administration, Department of Commerce.

EFFECTIVE DATE: June 7, 1996.

FOR FURTHER INFORMATION CONTACT: John Beck or Magd Zalok, Office of Antidumping Investigations, Import Administration, U.S. Department of Commerce, 14th Street and Constitution Avenue, N.W., Washington D.C. 20230; telephone (202) 482–3464 or (202) 482–4162, respectively.

The Applicable Statute

Unless otherwise indicated, all citations to the Tariff Act of 1930 (the Act) are references to the provisions effective January 1, 1995, the effective date of the amendments made to the Act by the Uruguay Rounds Agreements Act.

Postponement of Preliminary Determinations

We have determined that these investigations are extraordinarily complicated within the meaning of section 733(c)(1)(B)(i) of the Act. The large number of potential respondents in both the brake drums and the brake rotors investigations will make it necessary to review the volume and value data from each one in order to determine the appropriate mandatory respondents. In addition, claims for separate rates will have to be analyzed individually.

Furthermore, we have determined that the parties concerned are cooperating, as required by section 733(c)(1)(B) of the Act, and that additional time is necessary to make these preliminary determinations in accordance with section 733(c)(1)(B)(ii) of the Act.

For these reasons, the deadline for issuing the preliminary determination in these cases is now no later than October 3, 1996.

This notice is published pursuant to section 733(c)(2) of the Act.

Dated: May 30, 1996.

Barbara R. Stafford,

Deputy Assistant Secretary for Investigations, Import Administration.

[FR Doc. 96–14313 Filed 6–6–96; 8:45 am]

BILLING CODE 3510–DS–P

[A–570–815]

Sulfanilic Acid From the People's Republic of China; Preliminary Results and Partial Rescission of Antidumping Administrative Review

AGENCY: Import Administration, International Trade Administration, Department of Commerce.

ACTION: Notice of preliminary results of antidumping duty administrative review.

SUMMARY: The Department of Commerce (the Department) is conducting an administrative review of the antidumping duty order on sulfanilic acid from the People's Republic of China (PRC) in response to requests by petitioner, Nation Ford Chemical Company (formerly known as R–M Industries, Inc.), by a respondent, Sinochem Hebei Import and Export Corporation (Sinochem Hebei), and by an importer, PHT International (PHT). This review covers shipments of this merchandise to the United States during the period August 1, 1994 through July 31, 1995.

We have preliminarily determined that sales have been made below normal value (NV). If these preliminary results are adopted in our final results, we will instruct U.S. Customs to assess antidumping duties equal to the differences between the United States price and NV.

Interested parties are invited to comment on these preliminary results. Parties who submit argument are requested to submit with each argument (1) a statement of the issue and (2) a brief summary of the argument.

EFFECTIVE DATE: June 7, 1996.

FOR FURTHER INFORMATION CONTACT: Karin Price or Maureen Flannery, Office of Antidumping Compliance, Import Administration, International Trade Administration, U.S. Department of Commerce, 14th Street and Constitution Avenue, N.W., Washington, D.C. 20230; telephone (202) 482–4733.

Applicable Statute

Unless otherwise indicated, all citations to the statute are references to the provisions effective January 1, 1995, the effective date of the amendments made to the Tariff Act of 1930 (the Act) by the Uruguay Round Agreements Act (URAA). In addition, unless otherwise indicated, all citations to the Department's regulations are to the current regulations, as amended by the interim regulations published in the Federal Register on May 11, 1995 (60 FR 25130).

SUPPLEMENTARY INFORMATION:

Background

On August 19, 1992, the Department published in the Federal Register (57 FR 37524) an antidumping duty order on sulfanilic acid from the PRC. On August 1, 1995, we published in the Federal Register (60 FR 39150) a notice of opportunity to request an administrative review of the antidumping duty order on sulfanilic acid from the PRC covering the period August 1, 1994 through July 31, 1995.

On August 11, 1995, in accordance with 19 CFR 353.22(a)(1)(1995), petitioner, Nation Ford Chemical Company (formerly known as R–M Industry, Inc.), requested that we conduct an administrative review of Sinochem Hebei, China National Chemical Construction Corporation, Beijing Branch (CNCCC), China National Chemical Construction Corporation, Qingdao Branch (CNCCC Qingdao), Sinochem Qingdao, Sinochem Shandong, Baoding No. 3 Chemical Factory (Baoding), Jinxing Chemical Factory (Jinxing), Zhenxing Chemical Industry Company (Zhenxing), Mancheng Xinyu Chemical Factory, Shijiazhuang (Xinyu Shijiazhuang), Mancheng Xinyu Chemical Factory, Beijing (Xinyu Beijing), Hainan Garden Trading Company (Hainan Garden), Yude Chemical Industry Company (Yude), and Shunping Lile (Shunping). Petitioner also requested an administrative review of Mancheng Xinyu Chemical Factory, Baoding, but as this company changed its name to Yude when it formed its joint venture with PHT, we have considered them to be one respondent. *See File Memorandum from Karin Price, Case Analyst,* dated February 6, 1996, ''The questionnaire for Mancheng Xinyu Chemical Factory, Baoding in the 1994/1995 administrative review of the antidumping duty order on sulfanilic acid from the People's Republic of China,'' which is on file in the Central Records Unit (room B–099 of the Main Commerce Building). On August 25, 1995, with a clarification on October 5, 1995, PHT, a U.S. importer of sulfanilic acid from the PRC, requested that we conduct a review of its two related Chinese exporters, Yude and Zhenxing. On August 25, 1995, Sinochem Hebei requested that we conduct a review of its sales. We published a notice of initiation of this antidumping duty administrative review on September 15, 1995 (60 FR 47930). The Department is conducting this administrative review in accordance with section 751 of the Act.

Scope of Review

Imports covered by this review are all grades of sulfanilic acid, which include technical (or crude) sulfanilic acid, refined (or purified) sulfanilic acid and sodium salt of sulfanilic acid.

Sulfanilic acid is a synthetic organic chemical produced from the direct sulfonation of aniline with sulfuric acid. Sulfanilic acid is used as a raw material in the production of optical brighteners, food colors, specialty dyes, and concrete additives. The principal differences between the grades are the undesirable quantities of residual aniline and alkali insoluble materials present in the sulfanilic acid. All grades are available as dry, free flowing powders.

Technical sulfanilic acid contains 96 percent minimum sulfanilic acid, 1.0 percent maximum aniline, and 1.0 percent maximum alkali insoluble materials. Refined sulfanilic acid contains 98 percent minimum sulfanilic acid, 0.5 percent maximum aniline and 0.25 percent maximum alkali insoluble materials.

Sodium salt is a powder, granular or crystalline material which contains 75 percent minimum equivalent sulfanilic acid, 0.5 percent maximum aniline based on the equivalent sulfanilic acid content, and 0.25 percent maximum alkali insoluble materials based on the equivalent sulfanilic acid content.

This merchandise is classifiable under Harmonized Tariff Schedule (HTS) subheadings 2921.42.22 and 2921.42.90. Although the HTS subheadings are provided for convenience and customs purposes, our written description of the scope of this proceeding is dispositive.

This review covers 13 manufacturers/exporters of sulfanilic acid from the PRC, and the period August 1, 1994 through July 31, 1995.

Verification

We conducted verification of Yude's and Zhenxing's sales questionnaire responses at PHT's facility in Charlotte, North Carolina on April 16 and 17, 1995. We conducted the verification using standard verification procedures, including the examination of relevant sales and financial records, and selection of original documentation containing relevant information. Our verification results are outlined in the public version of the verification report.

Use of Facts Otherwise Available

We preliminarily determine, in accordance with section 776(a) of the Act, that the use of facts available is appropriate for CNCCC, CNCCC Qingdao, Jinxing, Shunping, Sinochem Hebei, Sinochem Qingdao, Sinochem Shandong, Xinyu Beijing, and Xinyu Shijiazhuang, because these companies did not respond to the Department's antidumping questionnaire.

Where the Department must base the entire dumping margin for a respondent in an administrative review on the facts available because that respondent failed to cooperate, section 776(b) authorizes the Department to use an inference adverse to the interests of that respondent in choosing the facts available. Section 776(b) also authorizes the Department to use as adverse facts available information derived from the

petition, the final determination, a previous administrative review, or other information placed on the record. Because information from prior proceedings constitutes secondary information, section 776(c) provides that the Department shall, to the extent practicable, corroborate that secondary information from independent sources reasonably at its disposal. The Statement of Administrative Action (SAA) provides that ''corroborate'' means simply that the Department will satisfy itself that the secondary information to be used has probative value.

To corroborate secondary information, the Department will, to the extent practicable, examine the reliability and relevance of the information to be used. However, unlike other types of information, such as input costs or selling expenses, there are no independent sources for calculated dumping margins. The only source for margins is administrative determinations. Thus, in an administrative review, if the Department chooses as total adverse facts available a calculated dumping margin from a prior segment of the proceeding, it is not necessary to question the reliability of the margin for that time period. With respect to the relevance aspect of corroboration, however, the Department will consider information reasonably at its disposal as to whether there are circumstances that would render a margin not relevant. Where circumstances indicate that the selected margin is not appropriate as adverse facts available, the Department will disregard the margin and determine an appropriate margin (*see, e.g., Fresh Cut Flowers from Mexico; Preliminary Results of Antidumping Duty Administrative Review* (60 FR 49567), where the Department disregarded the highest margin in that case as adverse best information available because the margin was based on another company's uncharacteristic business expense resulting in an unusually high margin). In this case, we have used the highest rate from any prior segment of the proceeding, 85.20 percent, the PRC rate established during the less-than-fair-value (LTFV) investigation of this case. *See Final Determination of Sales at Less Than Fair Value: Sulfanilic Acid from the People's Republic of China* (57 FR 29705, July 6, 1992). We have no reason to believe this rate is not relevant.

Separate Rates

To establish whether a company operating in a state-controlled economy is sufficiently independent to be entitled to a separate rate, the Department analyzes each exporting entity under the test established in the *Final Determination of Sales at Less Than Fair Value: Sparklers from the People's Republic of China* (56 FR 20588, May 6, 1991) (*Sparklers*), as amplified in *Silicon Carbide*. Under this policy, exporters in non-market-economy (NME) countries are entitled to separate, company-specific margins when they can demonstrate an absence of government control, both in law (*de jure*) and in fact (*de facto*), with respect to exports. Evidence supporting, though not requiring, a finding of *de jure* absence of government control over export activities includes: (1) an absence of restrictive stipulations associated with an individual exporter's business and export licenses; (2) any legislative enactments decentralizing control of companies; and (3) any other formal measures by the government decentralizing control of companies. *De facto* absence of government control with respect to exports is based on four criteria: (1) whether the export prices are set by or subject to the approval of a government authority; (2) whether each exporter retains the proceeds from its sales and makes independent decisions regarding the disposition of profits and financing of losses; (3) whether each exporter has autonomy in making decisions regarding the selection of management; and (4) whether each exporter has the authority to negotiate and sign contracts and other agreements.

Yude and Zhenxing have responded to the Department's request for information regarding separate rates. We have found that the evidence on the record demonstrates an absence of government control, both in law and in fact, with respect to Yude's and Zhenxing's exports according to the criteria identified in *Sparklers* and *Silicon Carbide* for this period of review, and have assigned a separate rate to each of these companies. For further discussion of this finding, *see Decision Memorandum to Holly A. Kuga, Director, Office of Antidumping Compliance*, dated May 21, 1996, ''Separate rates in the 1994/1995 administrative review of sulfanilic acid from the People's Republic of China,'' which is on file in the Central Records Unit (room B–099 of the Main Commerce Building).

In the LTFV investigation of this case, we found that Sinochem Hebei was eligible for a separate rate under the criteria set forth in *Sparklers*. However, since *Sparklers* does not address the additional information required by *Silicon Carbide* for making a determination of separate rates (*i.e.*, whether each exporter has autonomy in making decisions regarding the selection of management and whether each exporter has the authority to negotiate and sign contracts and other agreements), we need to analyze information on the record of this review to determine whether Sinochem Hebei merits a separate rate with respect to the additional criteria. *See Certain Helical Spring Lock Washers from the People's Republic of China; Preliminary Results of Antidumping Administrative Review* (60 FR 42519, August 16, 1995). Since Sinochem Hebei did not respond to our separate rates questionnaire, we are not able to make this determination. Therefore, we have found that Sinochem Hebei is not eligible for a separate rate in this review.

Yude and Zhenxing: Affiliation and Collapsing

Yude and Zhenxing are each joint venture partners with PHT. Due to PHT's ownership interest in both joint ventures and the fact that some of the same people sit on the boards of directors of each joint venture, and especially because PHT is legally and operationally in a position to exercise restraint or direction over both joint ventures, we consider Yude and Zhenxing to be affiliated pursuant to section 771(33)(F) of the Act.

The Department ''collapses'' affiliated firms (*i.e.*, treats them as a single entity for review purposes and assigns them a single dumping margin) where the type and degree of relationship is so significant that we find that there is a strong possibility of manipulation of prices or production. *See 19 CFR Parts 351, 353, and 355 Antidumping Duties; Countervailing Duties; Proposed Rule* (61 FR 7381, February 27, 1996) (*Proposed Rule*). *See* also *Nihon Cement Co., Ltd. v. United States*, 17 CIT 400 (1993). Because Yude and Zhenxing are each joint venture partners with PHT, we have considered whether Yude and Zhenxing should be collapsed for purposes of this administrative review as a result of their relationships with PHT.

The Department's current policy is to treat two or more affiliated producers as a single entity where those producers have production facilities that would not require substantial retooling of either facility in order to restructure manufacturing priorities and the Department concludes that there is a significant potential for the manipulation of prices or production. In identifying a significant potential for the manipulation of prices or production, the Department considers the following:

- The level of common ownership;

• Whether managerial employees or board members of one of the affiliated producers sit on the board of directors of the other affiliated person; and

• Whether operations are intertwined, such as through the sharing of sales information, information on production and pricing decisions, the sharing of facilities or employees, or significant transactions between the affiliated producers.

See Proposed Rule

Based on our analysis of these criteria, we have determined that there is a strong possibility of manipulation of prices or production between Yude and Zhenxing. In addition to PHT's ownership percentage in each joint venture, we have found that some of the same people sit on Yude's and Zhenxing's boards of directors, and that PHT makes sales and pricing decisions for each of the joint ventures. We have also found that Yude and Zhenxing have similar production processes such that substantial retooling of either facility would not be necessary to restructure manufacturing priorities. Therefore, we have determined that Yude and Zhenxing should be collapsed as a result of their relationships with PHT. For a further discussion of this issue, *see Decision Memorandum to Holly A. Kuga, Director, Office of Antidumping Compliance*, dated May 20, 1996, ''Collapsing in the 1994/1995 administrative review of sulfanilic acid from the People's Republic of China,'' which is on file in the Central Records Unit (room B–099 of the Main Commerce Building).

We are collapsing Yude and Zhenxing for the purposes of calculating margins, and we are collapsing their factor data for use in calculating NV. We have calculated one NV for Yude and Zhenxing by weight averaging Yude's and Zhenxing's factors based on the quantities of sulfanilic acid each produced during the period of review.

United States Price

For sales made by Yude and Zhenxing, we calculated constructed export price based on FOB, CIF, or CIP prices to unrelated purchasers in the United States. We made deductions for foreign inland freight, ocean freight, marine insurance, U.S. duties, U.S. transportation, credit, commissions, warehousing, repacking in the United States, indirect selling expenses, and constructed export price profit, as appropriate, in accordance with section 772(d)(3) of the Act.

Normal Value

For companies located in NME countries, section 773(c)(1) of the Act provides that the Department shall determine NV using a factors of production methodology if (1) the merchandise is exported from a NME country, and (2) the available information does not permit the calculation of NV using home-market prices, third-country prices, or constructed value under section 773(a) of the Act.

In every case conducted by the Department involving the PRC, the PRC has been treated as an NME country. Pursuant to section 771(18)(C)(i), any determination that a foreign country is a NME country shall remain in effect until revoked by the administering authority. None of the parties to this proceeding has contested such treatment in this review. Accordingly, we treated the PRC as a NME country for purposes of this review and calculated NV by valuing the factors of production as set forth in section 773(c)(3) of the Act in a comparable market economy country which is a significant producer of comparable merchandise. Pursuant to section 773(c)(4) and section 353.52(2) of the Department's regulations, we determined that India is comparable to the PRC in terms of per capita gross national product (GNP), the growth rate in per capita GNP, and the national distribution of labor, and that India is a significant producer of comparable merchandise. For further discussion of the Department's selection of India as the primary surrogate country, *see Memorandum from David Mueller, Director, Office of Policy, to Maureen Flannery*, dated March 28, 1996, ''Sulfanilic Acid from the People's Republic of China (PRC): Nonmarket Economy Status and Surrogate Country Selection,'' and *File Memorandum*, dated May 23, 1996, ''India as a significant producer of comparable merchandise in the 1994/1995 administrative review of sulfanilic acid from the People's Republic of China,'' which are on file in the Central Records Unit (room B–099 of the Main Commerce Building).

For purposes of calculating NV, we valued PRC factors of production as follows, in accordance with section 773(c)(1) of the Act:

• To value aniline used in the production of sulfanilic acid, we used the rupee per kilogram value of imports into India during April 1994–April 1995, obtained from the February 1995 and April 1995 *Monthly Statistics of the Foreign Trade of India, Volume II—Imports (Indian Import Statistics)*. Using wholesale price indices (WPI) obtained from the *International Financial Statistics*, published by the International Monetary Fund (IMF), we adjusted this value to reflect inflation through the period of review. We made adjustments to include freight costs incurred between the suppliers and the sulfanilic acid factories.

• To value sulfuric acid used in the production of sulfanilic acid, we used the rupee per kilogram value reported in *Chemical Weekly*. We made adjustments to include freight costs incurred between the suppliers and the sulfanilic acid factories.

• To value activated carbon used in the production of sulfanilic acid, we used the rupee per kilogram value reported in *Chemical Weekly*. We made adjustments to include freight costs incurred between the suppliers and the sulfanilic acid factories.

• For direct labor, we used the labor rates reported in the Economist Intelligence Unit's *Investing, Licensing and Trading Conditions Abroad: India*, released November 1994. This source breaks out labor rates between skilled and unskilled labor for 1994 and provides information on the number of labor hours worked per week. Using WPI obtained from the *International Financial Statistics*, we adjusted the labor rates to reflect inflation through the period of review.

• For factory overhead, we used information reported in the April 1995 *Reserve Bank of India Bulletin*. From this information, we were able to determine factory overhead as a percentage of total cost of manufacture.

• For selling, general and administrative (SG&A) expenses, we used information obtained from the April 1995 *Reserve Bank of India Bulletin*. We calculated an SG&A rate by dividing SG&A expenses by the cost of manufacture.

• To calculate a profit rate, we used information obtained from the April 1995 *Reserve Bank of India Bulletin*. We calculated a profit rate by dividing the before-tax profit by the sum of those components pertaining to the cost of manufacturing plus SG&A.

• To value the inner and outer bags used as packing materials, we used import statistics for India obtained from the *Indian Import Statistics*. Using WPI obtained from the *International Financial Statistics*, we adjusted these values to reflect inflation through the period of review. We adjusted these values to include freight costs incurred between the suppliers and the sulfanilic acid factories.

• To value coal, we used the price of steam coal reported in *The Gazette of India*, June 16, 1994. We adjusted the value of coal to reflect inflation through the period of review using WPI published by the IMF.

• To value electricity, we used the price of electricity on March 1, 1995 reported in *Current Energy Scene in India*, July 1995, by the Centre for Monitoring Indian Economy.

• To value truck freight, we used the rate reported in an August 1993 cable from the U.S. Embassy in India submitted for the *Final Determination of Sales at Less Than Fair Value: Certain Helical Spring Lock Washers from the People's Republic of China* (58 FR 48833, September 20, 1993). We adjusted the truck freight rates to reflect inflation through the period of review using WPI published by the IMF.

• To value rail freight, we used the price reported in a December 1989 cable from the U.S. Embassy in India submitted for the *Final Results of Antidumping Duty Administrative Review: Shop Towels of Cotton from the People's Republic of China* (56 FR 4040, February 1, 1991). We adjusted the rail freight rates to reflect inflation through the period of review using WPI published by the IMF.

Non-shippers

Baoding and Hainan Garden stated that they did not have shipments during the period of review, and we confirmed this with the United States Customs Service. Therefore, we are treating them as non-shippers for this review, and are rescinding this review with respect to these companies. *See Proposed Rule,* section 351.213(d)(3) (61 FR 7365). The cash deposit rates for these firms will continue to be the rates established in the most recently completed final determination.

Preliminary Results of the Review

We preliminarily determine that the following dumping margins exist:

Manufacturer/ exporter	Time period	Margin (percent)
Yude Chemical Industry Company ...	8/1/94–7/31/95	20.78 *
Zhenxing Chemical Industry Company ...	8/1/94–7/31/95	20.78 *
PRC Rate [1]	8/1/94–7/31/95	85.20

[1] This rate will be applied to all firms which have not demonstrated that they are separate from the PRC government, including, but not limited to, the following firms for which a review was requested: China National Chemical Construction Corporation, Beijing Branch; China National Chemical Construction Corporation, Qingdao Branch; Jinxing Chemical Factory; Mancheng Xinyu Chemical Factory, Beijing; Mancheng Xinyu Chemical Factory, Shijiazhuang; Shunping Lile; Sinochem Hebei Import and Export Corporation; Sinochem Qingdao; and Sinochem Shandong.

* Yude and Zhenxing have been collapsed for the purposes of this administrative review. However, we have listed them separately on this chart for Customs purposes.

Parties to the proceeding may request disclosure within 5 days of the date of publication of this notice. Any interested party may request a hearing within 10 days of publication. Any hearing, if requested, will be held 44 days after the publication of this notice, or the first workday thereafter. Interested parties may submit case briefs within 30 days of the date of publication of this notice. Rebuttal briefs, which must be limited to issues raised in the case briefs, may be filed not later than 37 days after the date of publication. The Department will publish a notice of final results of this administrative review, which will include the results of its analysis of issues raised in any such comments.

The Department shall determine, and the Customs Service shall assess, antidumping duties on all appropriate entries. Individual differences between United States price and NV may vary from the percentage stated above. Upon completion of this review, the Department will issue appraisement instructions directly to the Customs Service.

Furthermore, the following deposit rates will be effective upon publication of the final results of these administrative reviews for all shipments of sulfanilic acid from the PRC entered, or withdrawn from warehouse, for consumption on or after the publication date, as provided for by section 751(a)(2)(c) of the Act: (1) the cash deposit rate for reviewed companies named above which have separate rates will be the rates for those firms established in the final results of this review; (2) for the companies named above which were not found to have a separate rate, as well as for all other PRC exporters, the cash deposit rate will be the highest margin ever in the LTFV investigation or in this or prior administrative reviews, the PRC rate; and (3) the cash deposit rate for non-PRC exporters of subject merchandise from the PRC will be the rate applicable to the PRC supplier of that exporter. These deposit rates, when imposed, shall remain in effect until publication of the final results of the next administrative review.

This notice also serves as a preliminary reminder to importers of their responsibility under 19 CFR 353.26 to file a certificate regarding the reimbursement of antidumping duties prior to liquidation of the relevant entries during this review period. Failure to comply with this requirement could result in the Secretary's presumption that reimbursement of antidumping duties occurred and the subsequent assessment of double antidumping duties.

This administrative review and notice are in accordance with section 751(a)(1) of the Act (19 U.S.C. 1675(a)(1)) and 19 CFR 353.22.

Dated: May 29, 1996.

Paul L. Joffe,

Acting Assistant Secretary for Import Administration.

[FR Doc. 96–14309 Filed 6–6–96; 8:45 am]

BILLING CODE 3510–DS–P

[C–122–825]

Notice of Postponement of Preliminary Countervailing Duty Determination: Certain Laminated Hardwood Flooring From Canada

AGENCY: Import Administration, International Trade Administration, Department of Commerce.

EFFECTIVE DATE: June 7, 1996.

FOR FURTHER INFORMATION CONTACT: David Boyland or Daniel Lessard, Office of Countervailing Duty Investigations, U.S. Department of Commerce, Room 3099, 14th Street and Constitution Avenue, N.W., Washington, DC 20230; telephone (202) 482- 4198, or (202) 482–1778, respectively.

Applicable Statute

Unless otherwise indicated, all citations to the statute are references to the provisions of the Tariff Act of 1930, as amended by the Uruguay Round Agreements Act effective January 1, 1995 (the Act).

Postponement

On March 27, 1996, the Department of Commerce (the Department) initiated a countervailing duty investigation of certain laminated hardwood flooring (LHF) from Canada (*see Notice of Initiation of Countervailing Duty Investigation: Certain Laminated*

Hardwood Flooring from Canada 61 FR 30280 (April 4, 1996)). On May 20, 1996, the Ad Hoc Committee on Laminated Hardwood Trailer Flooring Imports (the petitioners) alleged that Nilus Leclerc Inc. (Leclerc), the Quebec producer of LHF in this investigation, is receiving upstream subsidies, as described under section 771A of the Act.

The May 15, 1996 upstream subsidy allegation submitted by petitioners, as supplemented by additional information, provides reasonable grounds for the Department to believe or suspect that stumpage subsidies provided by the Government of Quebec are being passed through to Leclerc pursuant to the purchase of hardwood lumber from suppliers. Accordingly, the Department is extending the deadline for its preliminary determination in this countervailing duty investigation in order to investigate the alleged upstream subsidies provided to Leclerc.

Under Section 703(g), the preliminary determination may be extended up to 250 days after the March 7, 1996 filing of the petition.

Dated: May 31, 1996

Barbara R. Stafford,

Deputy Assistant Secretary for Import Administration.

[FR Doc. 96–14312 Filed 6–6–96; 8:45 am]

BILLING CODE 3510–DS–P

Minority Business Development Agency

Notice; Solicitation of Business Development Center Applications for Boston, Connecticut, and Washington, DC

AGENCY: Minority Business Development Agency, Commerce.

SUMMARY: In accordance with Executive Order 11625 and 15 U.S.C. 1512, the Minority Business Development Agency (MBDA) is soliciting competitive applications from organizations to operate the Minority Business Development Centers (MBDC) listed in this document.

The purpose of the MBDC Program is to provide business development assistance to persons who are members of groups determined by MBDA to be socially or economically disadvantaged, and to business concerns owned and controlled by such individuals. To this end, MBDA funds organizations to identify and coordinate public and private sector resources on behalf of minority individuals and firms; to offer a full range of client services to minority entrepreneurs; and to serve as a conduit of information and assistance regarding minority business.

In accordance with the Interim Final Policy published in the Federal Register on May 31, 1996, the cost-share requirement for the MBDCs listed in this notice has been increased to 40%. The Department of Commerce will fund up to 60% of the total cost of operating an MBDC on an annual basis. The MBDC operator is required to contribute at least 40% of the total project cost (the ''cost-share requirement''). Cost-sharing contributions may be in the form of cash, client fees, third party in-kind contributions, non-cash applicant contributions or combinations thereof. In addition to the traditional sources of an MBDC's cost-share contribution, the 40% may be contributed by local, state and private sector organizations. It is anticipated that some organizations may apply jointly for an award to operate the center. For administrative purposes, one organization must be designated as the recipient organization.

DATES: The closing date for applications for each MBDC is listed below.

PRE-APPLICATION CONFERENCE: Proper identification is required for entrance into any Federal Building.

ADDRESSES: Completed application packages should be submitted to the U.S. Department of Commerce, Minority Business Development Agency, MBDA Executive Secretariat, 14th and Constitution Avenue, NW., room 5073, Washington, DC. 20230.

SUPPLEMENTARY INFORMATION: The following are MBDCs for which applications are solicited:

1. MBDC Application: Boston.

Metropolitan Area Serviced: Boston, Massachusetts.

Award Number: 01–10–96002–01.

Closing Date for Applications: July 8, 1996.

Pre-Application Conference: A pre-application conference will be held on Wednesday, June 19, 1996, from 10:00 a.m. to 3:00 p.m., at the Thomas P. O'Neil Federal Building, 10 Causeway Street, Room 1088, Boston, Massachusetts.

For Further Information and an Application Package, Contact: Heyward Davenport, Regional Director, at (212) 264–3262 Contingent upon the availability of Federal funds, the cost of performance for the first budget period (13 months) from October 1, 1996 to October 30, 1997, is estimated at $314,778. The total Federal amount is $188,867 and is composed of $184,260 plus the Audit Fee amount of $4,607. The application must include a minimum cost share of 40%, $125,911 in non-federal (cost-sharing) contributions for a total project cost of $314,778.

2. MBDC Application: Connecticut.

Metropolitan Area Serviced: State of Connecticut.

Award Number: 02–10–96007–01.

Closing Date for Applications: July 8, 1996.

Pre-Application Conference: A pre-application conference will be held on Thursday, June 20, 1996, from 10:00 a.m. to 3:00 p.m., at 153 Market Street, 6th Floor, Hartford, Connecticut.

For Further Information and an Application Package, Contact: Heyward Davenport, Regional Director, at (212) 264–3262. Contingent upon the availability of Federal funds, the cost of performance for the first budget period (13 months) from October 1, 1996 to October 30, 1997, is estimated at $314,778. The total Federal amount is $188,867 and is composed of $184,260 plus the Audit Fee amount of $4,607. The application must include a minimum cost share of 40%, $125,911 in non-federal (cost-sharing) contributions for a total project cost of $314,778.

3. MBDC Application: Washington, D.C.

Metropolitan Area Serviced: District of Columbia.

Award Number: 03–10–96006–01.

Closing Date for Applications: July 8, 1996.

Pre-Application Conference: A pre-application conference will be held on Monday, June 24, 1996, from 10:00 a.m. to 3:00 p.m., at the U.S. Department of Commerce, 14th and Constitution Avenue, N.W., Room 1066, Washington, D.C.

For Further Information and an Application Package, Contact: Heyward Davenport, Regional Director, at (212) 264–3262. Contingent upon the availability of Federal funds, the cost of performance for the first budget period (13 months) from October 1, 1996 to October 30, 1997, is estimated at $708,105. The total Federal amount is $424,863 and is composed of $414,500 plus the Audit Fee amount of $10,363. The application must include a minimum cost share of 40%, $283,242 in non-federal (cost-sharing) contributions for a total project cost of $708,105.

Standard Paragraphs

The following information and requirements are applicable to the listed MBDCs: Boston, Connecticut, and Washington, D.C.

The funding instrument for this project will be a cooperative agreement. If the recommended applicant is the current incumbent organization, the

award will be for 12 months. For those applicants who are not incumbent organizations or who are incumbents that have experienced closure due to a break in service, a 30-day start-up period will be added to their first budget period, making it a 13-month award. Competition is open to individuals, non-profit and for-profit organizations, state and local governments, American Indian tribes and educational institutions.

Applications will be evaluated on the following criteria: the knowledge, background and/or capabilities of the firm and its staff in addressing the needs of the business community in general and, specifically, the special needs of minority businesses, individuals and organizations (45 points), the resources available to the firm in providing business development services (10 points); the firm's approach (techniques and methodologies) to performing the work requirements included in the application (25 points); and the firm's estimated cost for providing such assistance (20 points). In accordance with Interim Final Policy published in the Federal Register on May 31, 1996, the scoring system will be revised to add ten (10) bonus points to the application of community-based organizations. Each qualifying application will receive the full ten points. Community-based applicant organizations are those organizations whose headquarters and/or principal place of business within the last five years have been located within the geographic service area designated in the solicitation for the award. Where an applicant organization has been in existence for fewer than five years or has been present in the geographic service area for fewer than five years, the individual years of experience of the applicant organization's principals may be applied toward the requirement of five years of organization experience. The individual years of experience must have been acquired in the geographic service area which is the subject of the solicitation. An application must receive at least 70% of the points assigned to each evaluation criteria category to be considered programmatically acceptable and responsive. Those applications determined to be acceptable and responsive will then be evaluated by the Director of MBDA. Final award selections shall be based on the number of points received, the demonstrated responsibility of the applicant, and the determination of those most likely to further the purpose of the MBDA program. Negative audit findings and recommendations and unsatisfactory performance under prior Federal awards may result in an application not being considered for award. The applicant with the highest point score will not necessarily receive the award. Periodic reviews culminating in year-to-date evaluations will be conducted to determine if funding for the project should continue. Continued funding will be at the total discretion of MBDA based on such factors as the MBDC's performance, the availability of funds and Agency priorities.

The MBDC shall be required to contribute at least 40% of the total project cost through non-federal contributions. To assist in this effort, the MBDC may charge client fees for services rendered. Fees may range from $10 to $60 per hour based on the gross receipts of the client's business.

Anticipated processing time of this award is 120 days. Executive order 12372, ''Intergovernmental Review of Federal Programs,'' is not applicable to this program. Federal funds for this project include audit funds for non-CPA recipients. In event that a CPA firm wins the competition, the funds allocated for audits are not applicable. Questions concerning the preceding information can be answered by the contact person indicated above, and copies of application kits and applicable regulations can be obtained at the above address. Notwithstanding any other provision of the law, no person is required to respond to, nor shall any person be subject to a penalty for failure to comply with a collection of information, subject to the requirements of the PRA, unless that collection of information displays a currently valid OMB Control Number. The collection of information requirements for this project have been approved by the Office of Management and Budget (OMB) and assigned OMB control number 0640–0006.

Awards under this program shall be subject to all Federal laws, and Federal and Departmental regulations, policies, and procedures applicable to Federal financial assistance awards.

Pre-Award Costs—Applicants are hereby notified that if they incur any costs prior to an award being made, they do so solely at their own risk of not being reimbursed by the Government. Notwithstanding any verbal assurance that an applicant may have received, there is no obligation on the part of the Department of Commerce to cover pre-award costs.

Outstanding Account Receivable—No award of Federal funds shall be made to an applicant who has an outstanding delinquent Federal debt until either the delinquent account is paid in full, repayment schedule is established and at least one payment is received, or other arrangements satisfactory to the Department of Commerce are made.

Name Check Policy—All non-profit and for-profit applicants are subject to a name check review process. Name checks are intended to reveal if any key individuals associated with the applicant have been convicted of or are presently facing criminal charges such as fraud, theft, perjury or other matters which significantly reflect on the applicant's management honesty or financial integrity.

Award Termination—The Departmental Grants Officer may terminate any grant/cooperative agreement in whole or in part at any time before the date of completion whenever it is determined that the award recipient has failed to comply with the conditions of the grant/cooperative agreement. Examples of some of the conditions which can cause termination are failure to meet cost-sharing requirements; unsatisfactory performance of the MBDC work requirements; and reporting inaccurate or inflated claims of client assistance. Such inaccurate or inflated claims may be deemed illegal and punishable by law.

False Statements—A false statement on an application for Federal financial assistance is grounds for denial or termination of funds, and grounds for possible punishment by a fine or imprisonment as provided in 18 U.S.C. 1001.

Primary Applicant Certifications—All primary applicants must submit a completed Form CD–511, ''Certifications Regarding Debarment, Suspension and Other Responsibility Matters; Drug-Free Workplace Requirements and Lobbying.''

Nonprocurement Debarment and Suspension—Prospective participants (as defined at 15 CFR Part 26, Section 26.105) are subject to 15 CFR Part 26, ''Nonprocurement Debarment and Suspension'' and the related section of the certification form prescribed above applies.

Drug Free Workplace—Grantees (as defined at 15 CFR Part 26, Section 26.605) are subject to 15 CFR Part 26, Subpart F, ''Governmentwide Requirements for Drug-Free Workplace (Grants)'' and the related section of the certification form prescribed above applies.

Anti-Lobbying—Persons (as defined at 15 CFR Part 28, § 28.105) are subject to the lobbying provisions of 31 U.S.C. 1352, ''Limitation on use of appropriated funds to influence certain

Federal contracting and financial transactions,'' and the lobbying section of the certification form prescribed above applies to applications/bids for grants, cooperative agreements, and contracts for more than $100,000, and loans and loan guarantees for more than $150,000 or the single family maximum mortgage limit for affected programs, whichever is greater.

Anti-Lobbying Disclosures—Any applicant that has paid or will pay for lobbying using any funds must submit an SF–LLL, ''Disclosure of Lobbying Activities,'' as required under 15 CFR Part 28, Appendix B.

Lower Tier Certifications—Recipients shall require applications/bidders for subgrants, contracts, subcontracts, or other lower tier covered transactions at any tier under the award to submit, if applicable, a completed Form CD–512, ''Certifications Regarding Debarment, Suspension, Ineligibility and Voluntary Exclusion-Lower Tier Covered Transactions and Lobbying'' and disclosure form, SF–LLL, ''Disclosure of Lobbying Activities.'' Form CD–512 is intended for the use of recipients and should not be transmitted to DOC. SF–LLL submitted by any tier recipient or subrecipient should be submitted to DOC in accordance with the instructions contained in the award document.

Buy American-made Equipment or Products—Applicants are hereby notified that they are encouraged, to the extent feasible, to purchase American-made equipment and products with funding provided under this program.

11.800 Minority Business Development Center.

(Catalog of Federal Domestic Assistance).

Dated: June 4, 1996.

Donald L. Powers,

Federal Register Liaison Officer Minority Business Development Agency.

[FR Doc. 96–14434 Filed 6–6–96; 8:45 am]

BILLING CODE 3510–21–P

COMMITTEE FOR PURCHASE FROM PEOPLE WHO ARE BLIND OR SEVERELY DISABLED

Procurement List; Proposed Additions

AGENCY: Committee for Purchase From People Who Are Blind or Severely Disabled.

ACTION: Proposed Additions to Procurement List.

SUMMARY: The Committee has received proposals to add to the Procurement List commodities and services to be furnished by nonprofit agencies employing persons who are blind or have other severe disabilities.

COMMENTS MUST BE RECEIVED ON OR BEFORE: July 8, 1996.

ADDRESSES: Committee for Purchase From People Who Are Blind or Severely Disabled, Crystal Square 3, Suite 403, 1735 Jefferson Davis Highway, Arlington, Virginia 22202–3461.

FOR FURTHER INFORMATION CONTACT: Beverly Milkman (703) 603–7740.

SUPPLEMENTARY INFORMATION: This notice is published pursuant to 41 U.S.C. 47(a) (2) and 41 CFR 51–2.3. Its purpose is to provide interested persons an opportunity to submit comments on the possible impact of the proposed actions.

If the Committee approves the proposed additions, all entities of the Federal Government (except as otherwise indicated) will be required to procure the commodities and services listed below from nonprofit agencies employing persons who are blind or have other severe disabilities. I certify that the following action will not have a significant impact on a substantial number of small entities. The major factors considered for this certification were:

1. The action will not result in any additional reporting, recordkeeping or other compliance requirements for small entities other than the small organizations that will furnish the commodities and services to the Government.

2. The action does not appear to have a severe economic impact on current contractors for the commodities and services.

3. The action will result in authorizing small entities to furnish the commodities and services to the Government.

4. There are no known regulatory alternatives which would accomplish the objectives of the Javits-Wagner-O'Day Act (41 U.S.C. 46—48c) in connection with the commodities and services proposed for addition to the Procurement List.

Comments on this certification are invited. Commenters should identify the statement(s) underlying the certification on which they are providing additional information.

The following commodities and services have been proposed for addition to Procurement List for production by the nonprofit agencies listed:

Commodities

Tape, Electronic Data Processing

7045–01–321–0642

NPA: North Central Sight Services, Inc., Williamsport, Pennsylvania

Frame, Picture

7105–01–419–5293
7105–01–419–5296
7105–01–419–5305
7105–01–419–5319
7105–01–419–5322
7105–01–419–5332
7105–01–419–5338
7105–01–419–5344
7105–01–419–5353
7105–01–419–5351
7105–01–419–5355
7105–01–424–7865
7105–01–424–6475
7105–01–424–6473
7105–01–424–6476
7105–01–424–6471
7105–01–424–6477
7105–01–424–6478
7105–01–424–6472
7105–01–424–6479
7105–01–424–6474
7105–01–424–6480
7105–01–424–6481
7105–01–424–6490
7105–01–424–6492
7105–01–424–6485
7105–01–424–6482
7105–01–424–6483
7105–01–424–6494
7105–01–424–6497
7105–01–424–6488
7105–01–424–6484
7105–01–424–6486
7105–01–424–6501
7105–01–424–6491
7105–01–424–6487
7105–01–424–6489
7105–01–424–6503
7105–01–424–6495
7105–01–424–6498
7105–01–424–6493
7105–01–424–6504
7105–01–424–6505

7105–01–424–6499

NPA: Kandu Industries, Inc., Holland, Michigan

Services

Catering Service, Military Entrance Processing Station, Miami, Florida, NPA: Haven Center, Miami, Florida

Food Service Attendant, Bradley Air National Guard Base, 103rd Fighter Group, East Granby, Connecticut, NPA: Goodwill Industries of the Springfield/ Hartford Area, Inc., Springfield, Massachusetts

Food Service Attendant, Air National Guard, Barnes Airport, 104th Fighter Group, Westfield, Massachusetts, NPA: Goodwill Industries of the Springfield/ Hartford Area, Inc., Springfield, Massachusetts

Janitorial/Custodial, Department of Energy, Yucca Mountain Site Characterization Office, Las Vegas, Nevada, NPA: Opportunity Village ARC, Las Vegas, Nevada

Janitorial/Custodial, Army & Air Force Exchange Service, Capps Building, Dallas, Texas, NPA: Fairweather Associates, Inc., Dallas, Texas

Janitorial/Custodial, Elkins USARC, Beverly, West Virginia, NPA: Buckhannon-Upshur Work Adjustment Center, Buckhannon, West Virginia.

Beverly L. Milkman,

Executive Director.

[FR Doc. 96–14439 Filed 6–6–96; 8:45 am]

BILLING CODE 6353–01–P

Procurement List; Additions

AGENCY: Committee for Purchase From People Who Are Blind or Severely Disabled.

ACTION: Additions to the Procurement List.

SUMMARY: This action adds to the Procurement List commodities and services to be furnished by nonprofit agencies employing persons who are blind or have other severe disabilities.

EFFECTIVE DATE: July 8, 1996.

ADDRESSES: Committee for Purchase From People Who Are Blind or Severely Disabled, Crystal Square 3, Suite 403, 1735 Jefferson Davis Highway, Arlington, Virginia 22202–3461.

FOR FURTHER INFORMATION CONTACT: Beverly Milkman (703) 603–7740.

SUPPLEMENTARY INFORMATION: On December 15, 1995, February 23, April 12 and 19, 1996, the Committee for Purchase From People Who Are Blind or Severely Disabled published notices (60 F.R. 64421, 61 F.R. 6977, 16241 and 17281) of proposed additions to the Procurement List.

After consideration of the material presented to it concerning capability of qualified nonprofit agencies to provide the commodities and services and impact of the additions on the current or most recent contractors, the Committee has determined that the commodities and services listed below are suitable for procurement by the Federal Government under 41 U.S.C. 46–48c and 41 CFR 51–2.4.

I certify that the following action will not have a significant impact on a substantial number of small entities. The major factors considered for this certification were:

1. The action will not result in any additional reporting, recordkeeping or other compliance requirements for small entities other than the small organizations that will furnish the commodities and services to the Government.

2. The action will not have a severe economic impact on current contractors for the commodities and services.

3. The action will result in authorizing small entities to furnish the commodities and services to the Government.

4. There are no known regulatory alternatives which would accomplish the objectives of the Javits-Wagner-O'Day Act (41 U.S.C. 46–48c) in connection with the commodities and services proposed for addition to the Procurement List.

Accordingly, the following commodities and services are hereby added to the Procurement List:

Commodities

Envelope, Wallet

7530–00–NIB–0260 (20″ x 26″)
7530–00–NIB–0261 (25″ x 31″)
7530–00–NIB–0262 (30″ x 42″)
(Requirements for the Defense Mapping Service, Bethesda, Maryland)

Sponge, Cellulose

7920–00–559–8462
7920–00–559–8463
7920–00–559–8464

Services

Administrative Services, GSA, Federal Supply Service Bureau, Fleet Management Division, Washington, DC

Document Processing, Defense Reutilization and Marketing Office, McClellan Air Force Base, California

Grounds Maintenance, Lenkalis USARC, 250 Washington Avenue, West Hazelton, Pennsylvania

Janitorial/Custodial, Camp H. M. Smith, Oahu, Hawaii

Janitorial/Custodial, Marine Corps Reserve Center, West Trenton, New Jersey

Janitorial/Custodial, Federal Bureau of Investigation Academy, Training Division, Quantico, Virginia

Mailroom Operation, Department of Veterans Affairs Medical Center, Syracuse, New York

Switchboard Operation, Kirtland Air Force Base, New Mexico

This action does not affect current contracts awarded prior to the effective date of this addition or options that may be exercised under those contracts.

Beverly L. Milkman,

Executive Director.

[FR Doc. 96–14440 Filed 6–6–96; 8:45 am]

BILLING CODE 6353–01–P

DEPARTMENT OF DEFENSE

Department of the Army

Corps of Engineers

Chesapeake and Delaware Canal-Baltimore Harbor Connecting Channels (Deepening) Feasibility Study

AGENCY: U.S. Army Corps of Engineers, Philadelphia District, DoD.

ACTION: Notice of Public Meeting.

SUMMARY: The U.S. Army Corps of Engineers, Philadelphia District will hold a public meeting on Tuesday July 9, 1996 from 7:00 pm to 9:00 pm at the Bohemia Manor High School on Route 213 in Chesapeake City, Maryland. The meeting is being held to discuss the recently completed draft feasibility report titled: Chesapeake and Delaware Canal-Baltimore Harbor Connecting Channels (Deepening) Delaware and Maryland, Draft Feasibility Report and Draft Environmental Impact Statement. The report evaluates the present authorized dimensions and operations of the canal and bay channels, and considers the need to better accommodate current and future shipping traffic. The report was submitted on May 10, 1996 for a formal public review that will last until June 24, 1996.The feasibility study is being cost-shared by the Federal government and the Maryland Department of Transportation-Maryland Port Administration, the non-Federal project sponsor.

FOR FURTHER INFORMATION CONTACT: Mr. Frank Master, Wanamaker Building, 100 Penn Square East, Philadelphia, PA. 19107–3390, (215) 656–6590.

SUPPLEMENTARY INFORMATION: The goal of the study is to determine an appropriate plan for the efficient use and development of the Chesapeake and Delaware Canal and Bay System. The study considered structural and non-structural measures that could be implemented to increase the efficiency of the navigation channel, and dredged material disposal capacity requirements for a 50 year study period. Alternatives were evaluated with regard to potential impacts to the natural and social environments.

Based on economic and environmental analyses, the selected plan consists of a navigation project for the Chesapeake and Delaware Canal and the Baltimore Harbor Connecting Channels. The plan provides for a full width channel (450 and 600 feet) with a 40-foot mean low water (MLW) depth and an allowable overdepth of 1 foot,

the enlargement of the Reedy Point flare, bend widening at Sandy Point, and construction of an emergency anchorage at Howell Point. The plan also includes aids to navigation and lands, easements, rights-of-way, and disposal areas as required for the initial construction and maintenance of the project. Dredged material quantities for the project are approximately 18.0 million cubic yards.

The selected dredged material disposal plan includes the use of several existing upland disposal sites and one open water site for initial construction. Dredged material (4,244,200 cubic yards) from Reach 1 would be placed in the existing upland dredged material disposal areas located on the C&D Canal: Biddles Point, Goose Point, St. Georges, and Summit East. Dredged material from Reach 2 (1,679,700 cubic yards) will be placed in the existing Bethel upland disposal area. In Reach 3, 2,283,100 cubic yards of dredged material will be placed in the existing upland disposal sites Pearce Creek and Courthouse Point. In Reach 4, 2,158,600 cubic yards of dredged material will be placed in a proposed overboard location immediately east of the existing G-West site near Pooles Island in the upper bay, referred to as G-East. Dredged material from Reach 5 (4,264,100 cubic yards) and Reach 6 (3,329,100 cubic yards) will be placed in the existing Hart-Miller Island containment area located near Baltimore Harbor.

In accordance with the National Environmental Policy Act of 1969, a Draft Environmental Impact Statement (DEIS) has been prepared for this project and has been circulated to the appropriate state and federal agencies; local, state, and federal officials; and private organizations. The public and all agencies are invited to comment on this proposal. Copies of the Draft Feasibility Report and Draft Environmental Impact Statement are available for public review at the Philadelphia District Office.

Impacts to water quality have been evaluated in accordance with the Section 404(b)(1) guidelines of the Clean Water Act, and are not adverse. In accordance with Section 401 of the Clean Water Act, Water Quality Certification has been requested from the Maryland Department of the Environment and the Delaware Department of Natural Resources and Environmental Control.

In accordance with Section 307(c) of the Coastal Zone Management Act of 1972, an activity affecting land or water uses in a state's coastal zone must comply with the state's Coastal Zone Management Program. A certification of compliance has been requested from both the Maryland Department of the Environment and the Delaware Department of Natural Resources and Environmental Control.

It has been determined that the proposed work would not have a significant adverse impact on listed species or their critical habitat, pursuant to Section 7 of the Endangered Species Act, as amended. Updated consultation with the U.S. Fish and Wildlife Service and the National Marine Fisheries Service would occur prior to project implementation to insure compliance with Section 7 of the Endangered Species Act.

Review of the National Register of Historic Places indicates that no registered properties, or properties listed as eligible for inclusion, would be impacted.

All practicable means to avoid or minimize adverse environmental effects have been incorporated into the recommended plan.

Robert L. Callegari,

Chief, Planning Division.

[FR Doc. 96–14379 Filed 6–6–96; 8:45 am]

BILLING CODE 3710–GR–M

Corps of Engineers

Notice of Intent to Prepare an Environmental Impact Statement (EIS) for the Rio Salado Environmental Restoration Project, Salt River, Cities of Tempe and Phoenix, Maricopa County, Arizona

AGENCY: U.S. Army Corps of Engineers, Los Angeles District, DoD.

ACTION: Notice of intent.

SUMMARY: The Los Angeles District intends to prepare an EIS to support the environmental restoration of stretches of the Salt River in the Cities of Tempe and Phoenix. The purpose of the proposal is to restore the Salt River to enhance the existing environment, restore and create wetland and riparian areas in both Indian Bend Wash and the Salt River, and create habitat for endangered species. The areas considered for analysis in the City of Tempe, consist of the lower portion of Indian Bend Wash and the Salt River immediately upstream of Tempe Town Lake. In the City of Phoenix, the proposed project area is the stretch of the Salt River from the Interstate 10 bridge downstream to 19th Avenue. The proposed project alternatives would include other stretches of the Salt River, as well as no action alternative. Other alternatives to be addressed in the EIS will include various sources of water for wetland restoration. The EIS will analyze potential impacts on the environment of a range of alternatives, including the recommended plan.

FOR FURTHER INFORMATION CONTACT: Mr. Kelly Ryan, U.S. Army Corps of Engineers, Los Angeles District, 3636 N. Central Ave, Suite 760, Phoenix, Arizona, 85012–1936 at (602) 640–2003.

SUPPLEMENTARY INFORMATION: The Army Corps of Engineers intends to prepare an EIS to assess the environmental effects associated with the environmental restoration of portions of the Salt River in the Cities of Tempe and Phoenix. The public will have the opportunity to comment on this analysis before any action is taken to implement the proposed action.

Scoping

a. The Army Corps of Engineers will conduct two scoping meetings, one in the City of Tempe and one in the City of Phoenix, prior to preparing the Environmental Impact Statement to aid in determining the significant environmental issues associated with the proposed action. The public, as well as Federal, State, and local agencies are encouraged to participate in the scoping process by submitting data, information, and comments identifying relevant environmental and socioeconomic issues to be addressed in the environmental analysis. Useful information includes other environmental studies, published and unpublished data, alternatives that should be addressed in the analysis, and potential mitigation measures associated with the proposed action.

b. The locations, dates and times of both the public scoping meetings will be announced in the local news media. Separate notification of the meetings will also be sent to all parties on the project mailing list.

c. Individuals and agencies may offer information or data relevant to the proposed project and the associated environmental or socioeconomic effects by attending the public scoping meeting. Comments on the proposed project, and requests to be placed on the mailing list for announcements and for the Draft EIS, should be sent to Mr. Alex Watt, U.S. Army Corps of Engineers, Los Angeles District, Attn: CESPL–PD–RQ, 911 Wilshire Blvd., Suite 1435, Los Angeles CA 90017–3401.

Availability of the Draft EIS

The Draft EIS is expected to be published and circulated for public review in January 1998. A public hearing to receive comments on the

Draft EIS will be held after it is published.

Gregory D. Showalter,

Army Federal Register Liaison Officer.

[FR Doc. 96–14380 Filed 6–6–96; 8:45 am]

BILLING CODE 3710–KF–M

Department of the Navy

Notice of Planning and Steering Advisory Committee; Closed Meeting

SUMMARY: Pursuant to the provisions of the Federal Advisory Committee Act (5 U.S.C. App. 2), notice is hereby given that the Planning and Steering Advisory Committee will meet on June 26, 1996 from 9:00 a.m. to 4:00 p.m., at the Center for Naval Analyses, 4401 Ford Avenue, Alexandria, Virginia. This session will be closed to the public.

The purpose of this meeting is to discuss topics relevant to SSBN security. The entire agenda will consist of classified information that is specifically authorized by Executive order to be kept secret in the interest of national defense and is properly classified pursuant to such Executive order.

Accordingly, the Under Secretary of the Navy has determined in writing that all sessions of the meeting shall be closed to the public because they concern matters listed in 552b(c)(1) of title 5, United States Code.

FOR FURTHER INFORMATION CONTACT: LCDR R.F. Brese, 2000 Navy Pentagon, Room 4D534, Washington, DC 20350–2000, Telephone Number: (703) 693–7248.

Dated: May 30, 1996.

M.A. Waters,

LCDR, JAGC, USN, Federal Register Liaison Officer.

[FR Doc. 96–14340 Filed 6–6–96; 8:45 am]

BILLING CODE 3810–FF–P

DEPARTMENT OF ENERGY

Energy Information Administration

Agency Information Collection Under Review by the Office of Management and Budget

AGENCY: Energy Information Administration, Department of Energy.

ACTION: Notice of request submitted for review by the Office of Management and Budget.

SUMMARY: The Energy Information Administration (EIA) has submitted the energy information collection(s) listed at the end of this notice to the Office of Management and Budget (OMB) for review under provisions of the Paperwork Reduction Act of 1995 (Pub. L. 104–13). The listing does not include collections of information contained in new or revised regulations which are to be submitted under section 3507(d)(1)(A) of the Paperwork Reduction Act, nor management and procurement assistance requirements collected by the Department of Energy (DOE).

Each entry contains the following information: (1) Collection number and title; (2) summary of the collection of information (includes sponsor; i.e., the DOE component), current OMB document number (if applicable), response obligation (mandatory, voluntary, or required to obtain or retain benefits), and type of request (new, revision, extension, or reinstatement); (3) a description of the need and proposed uses of the information; (4) a description of the likely respondents; and (5) an estimate of the total annual reporting and recordkeeping burden (number of respondents per year times the average number of responses per respondent annually times the average burden per response).

DATES: Comments must be filed within 30 days of publication of this notice. If you anticipate that you will be submitting comments, but find it difficult to do so within the time allowed by this notice, you should advise the OMB DOE Desk Officer listed below of your intention to do so as soon as possible. The Desk Officer may be telephoned at (202) 395–3084. (Also, please notify the EIA contact listed below.)

ADDRESSES: Address comments to the Department of Energy Desk Officer, Office of Information and Regulatory Affairs, Office of Management and Budget, 726 Jackson Place, NW, Washington, D.C. 20503. (Comments should also be addressed to the Office of Statistical Standards at the address below.)

FOR FURTHER INFORMATION: Requests for additional information or copies of the forms and instructions should be directed to Norma White, Office of Statistical Standards, (EI–73), Forrestal Building, U.S. Department of Energy, Washington, D.C. 20585. Ms. White may be telephoned at (202) 426–1107.

SUPPLEMENTARY INFORMATION: The energy information collection submitted to OMB for review was:

1. Forms EIA–457A–H, Residential Energy Consumption Survey (RECS).

2. Sponsor—Energy Information Administration; Docket Number—1905–0092; Response Obligation—Voluntary and Mandatory; Extension of Currently Approved Collection.

3. The RECS is a triennial survey of U.S. households to estimate energy consumption and expenditures and track changes over time. The data are widely used throughout the government and the private sector for policy analysis and are made available to the public in a variety of publications and electronic data files.

4. Respondents—Individuals or households; Federal Government; and State, Local or Tribal Government.

5. 6,798 total annual burden hours (9430 respondents; 3140 annual responses × 2.165 hours per response).

Authority: Section 3506(c)(2)(A) of the Paperwork Reduction Act of 1995 (Pub. L. No. 104–13).

Issued in Washington, D.C., May 31, 1996.

Yvonne M. Bishop,

Director, Office of Statistical Standards, Energy Information Administration.

[FR Doc. 96–14405 Filed 6–6–96; 8:45 am]

BILLING CODE 6450–01–P

Federal Energy Regulatory Commission

[Docket No. RP96–245–000]

CNG Transmission Corporation; Notice of Section 4 Filing

June 3, 1996.

Take notice that on May 28, 1996, CNG Transmission Corporation (CNG) tendered for filing pursuant to Section 4 of the Natural Gas Act, a notice of termination of gathering service on five specified gathering pipelines in Clearfield County, Pennsylvania. CNG states that the pipelines will be abandoned by sale to CNG Producing Company, an affiliate of CNG. CNG requests that the effective date for the termination of service by July 1, 1996. CNG states that no contract for transportation service will be canceled or terminated as a result of this abandonment.

Any person desiring to be heard or to protest this filing should file a motion to intervene or protest with the Federal Energy Regulatory Commission, 888 First Street, N.E., Washington, D.C. 20426, in accordance with Sections 385.211 and 385.214 of the Commission's Rules and Regulations. Pursuant to Section 154.210 of the Commission's Regulations, all such motions or protests must be filed no later than June 10, 1996. Protests will be considered by the Commission in determining the appropriate action to be taken, but will not serve to make protestants parties to the proceeding.

Any person wishing to become a party must file a motion to intervene. Copies of this filing are on file with the Commission and are available for public inspection in the Public Reference Room.

Lois D. Cashell,

Secretary.

[FR Doc. 96–14352 Filed 6–6–96; 8:45 am]

BILLING CODE 6717–01–M

[Docket Nos. RP95–185–000 and RP93–206–000]

Northern Natural Gas Company; Notice of Proposed Settlement

May 31, 1996.

On May 16, 1996, the Canadian Association of Petroleum Producers, and the Alberta Department of Energy (Movants) filed a proposed settlement and a motion for partial consolidation of the above captioned proceedings which relate to the ongoing rate case of Northern Natural Gas Company, and a proceeding to establish measures to ensure adequate capacity on Northern's system at Carlton, Minnesota (the Carlton Resolution). By letter filed May 21, 1996, the Movants informed the Commission that they failed to serve copies of their proposed settlement on all parties to the proceeding until May 21, 1996. In order to cure their error, and for the comment period on the settlement and the motion to be congruent to all parties, the Movants propose that initial comments be due 20 days from the time of complete service, or June 10, 1996, and reply comments be due 10 days thereafter, or June 20, 1996, as provided for by Rule 602 of the Commission's regulations.

Upon consideration, notice is hereby given that initial comments to the Movant's May 16, 1996 filing are due on or before June 10, 1996, and reply comments are due on or before June 20, 1996.

Lois D. Cashell,

Secretary.

[FR Doc. 96–14393 Filed 6–6–96; 8:45 am]

BILLING CODE 6717–01–M

[Docket No. CP96–536–000]

Northwest Pipeline Corporation; Notice of Request Under Blanket Authorization

June 3, 1996.

Take notice that on May 22, 1996, Northwest Pipeline Corporation (Northwest), 295 Chipeta Way, Salt Lake City, Utah 84108, filed in Docket No. CP96–536–000 a request pursuant to Sections 157.205, 157.211 and 157.216 of the Commission's Regulations under the Natural Gas Act (18 CFR 157.205, 157.211 and 157.216) for authorization to abandon certain inefficient facilities at the Brownsville/Halsey Meter Station in Linn County, Oregon, and to construct and operate modified replacement facilities at that station to more efficiently accommodate its existing firm maximum daily delivery obligations at that point to Northwest Natural Gas Company and James River Corporation, under Northwest's blanket certificate issued in Docket No. CP82–433–000 pursuant to Section 7 of the Natural Gas Act, all as more fully set forth in the request that is on file with the Commission and open to public inspection.

Northwest proposes to replace two of the three existing 6-inch orifice meters with two new 6-inch turbine meters and appurtenances to enhance accuracy and efficiency in measuring varying flow rates. Since the capacity of the two new turbine meters will be nearly the same as the three existing orifice meters, Northwest will remove the third existing 6-inch orifice meter and convert that meter run for use as a by-pass line for the meter station when necessary. After these modifications, the maximum design capacity of the meters will decrease from 38,750 Dth per day to approximately 35,069 Dth per day at a delivery pressure of 400 psig, but the design capacity of the meter station will not change since it is limited by the existing regulators to 17,500 Dth per day at 400 psig. The total cost of the proposal is estimated at approximately $108,240, comprised of $99,840 for installation of new facilities and $8,400 for removal of old facilities.

Northwest states that the proposed facility replacements are not prohibited by its existing tariff and that it has sufficient capacity to accomplish deliveries without detriment or disadvantage to its other customers. The proposed modifications will not have an effect on Northwest's peak day and annual deliveries and the total volumes delivered will not exceed total volumes authorized prior to this request.

Any person or the Commission's staff may, within 45 days after issuance of the instant notice by the Commission, file pursuant to Rule 214 of the Commission's Procedural Rules (18 CFR 385.214) a motion to intervene or notice of intervention and pursuant to Section 157.205 of the Regulations under the Natural Gas Act (18 CFR 157.205) a protest to the request. If no protest is filed within the time allowed therefor, the proposed activity shall be deemed to be authorized effective the day after the time allowed for filing a protest. If a protest is filed and not withdrawn within 30 days after the time allowed for filing a protest, the instant request shall be treated as an application for authorization pursuant to Section 7 of the Natural Gas Act.

Lois D. Cashell,

Secretary.

[FR Doc. 96–14348 Filed 6–6–96; 8:45 am]

BILLING CODE 6717–01–P

[RP95–409–000]

Northwest Pipeline Corporation; Notice of Informal Settlement Conference

June 3, 1996.

Take notice that an informal settlement conference will be convened in these proceedings on June 11, 1996 at 10:00 a.m. at the offices of the Federal Energy Regulatory Commission, 888 First Street, N.E., Washington, D.C., 20426, for the purpose of exploring the possible settlement of the issues in this proceeding.

Any party, as defined by 18 CFR 385.102(c), or any participant as defined by 18 CFR 385.102(b), is invited to attend. Persons wishing to become a party must move to intervene and receive intervenor status pursuant to the Commission's regulations (18 CFR 385.214).

For additional information, contact Marc G. Denkinger (202) 208–2215 or Kathleen M. Dias (202) 208–0524.

Lois D. Cashell,

Secretary.

[FR Doc. 96–14351 Filed 6–6–96; 8:45 am]

BILLING CODE 6717–01–M

[Docket No. CP96–540–000]

Texas Eastern Transmission Corporation; Notice of Request Under Blanket Authorization

June 3, 1996.

Take notice that on May 23, 1996, Texas Eastern Transmission Corporation (Texas Eastern), 5400 Westheimer Court, Houston, Texas 77056–5310, filed in Docket No. CP96–540–000, a request pursuant to Sections 157.205 and 157.211 of the Commission's Regulations under the Natural Gas Act (18 CFR 157.205 and 157.211) for authorization to construct and operate a delivery point on Texas Eastern's 24-inch Line No. 11 in Shelby County, Texas in order to make interruptible natural gas deliveries for Four Square Gas Company (Four Square), a marketer, and the City of Chireno (City), the end user, (Customers), under its blanket certificate issued in Docket No. CP82–535–000, pursuant to Section 7(c) of the

Natural Gas Act, all as more fully set forth in the request which is on file with the Commission and open to public inspection.

Texas Eastern states that the proposed facilities consist of a 2-inch tap valve and a 2-inch check valve on Texas Eastern's 24-inch Line No. 11, at approximate Mile Post 225.64 located in Shelby County, Texas. It is indicated that, in addition to the tap and check valves, the Customers will install, or cause to be installed, a single 2-inch turbine meter (meter station), approximately 50 feet of 2-inch pipeline which will extend from the meter station to the tap and the electronic gas measurement equipment. Texas Eastern explains that the proposed facilities would allow it to provide up to 1 Mmcf/d of interruptible transportation to the Customers pursuant to Texas Eastern's Rate Schedule IT–1 in its FERC Gas Tariff, Sixth Revised Volume No. 1. Texas Eastern says that the Customers will reimburse it for 100% of the costs of the facilities which Texas Eastern estimates to be $20,000.

Texas Eastern states that the interruptible transportation service to be rendered to the Customers through the delivery point would be performed utilizing existing capacity on Texas Eastern's system and will have no effect on Texas Eastern's peak day or annual deliveries. Texas Eastern asserts that the proposal will be accomplished without detriment or disadvantage to its other customers. Texas Eastern states that its existing tariff does not prohibit the addition of these facilities.

Any person or the Commission's staff may, within 45 days after issuance of the instant notice by the Commission, file pursuant to Rule 214 of the Commission's Procedural Rules (18 CFR 385.214) a motion to intervene or notice of intervention and pursuant to Section 157.205 of the Regulations under the Natural Gas Act (18 CFR 157.205) a protest to the request. If no protest is filed within the time allowed therefor, the proposed activity shall be deemed to be authorized effective the day after the time allowed for filing a protest. If a protest is filed and not withdrawn within 30 days after the time allowed for filing a protest, the instant request shall be treated as an application for authorization pursuant to Section 7 of the Natural Gas Act.

Lois D. Cashell,

Secretary.

[FR Doc. 96–14349 Filed 6–6–96; 8:45 am]

BILLING CODE 6717–01–M

[Docket No. CP96–546–000]

Trunkline Gas Company; Notice of Request Under Blanket Authorization

June 3, 1996.

Take notice that on May 29, 1996, Trunkline Gas Company (Trunkline), Post Office Box 1642, Houston, Texas 77251–1642, filed a request with the Commission in Docket No. CP96–546–000, pursuant to Sections 157.205 and 157.211 of the Commission's Regulations under the Natural Gas Act (NGA) for authorization to construct, own and operate two hot taps and associated facilities to provide firm transportation service for Central Louisiana Electric Company (CLECO) authorized in blanket certificate issued in Docket No. CP83–84–000, all as more fully set forth in the request on file with the Commission and open to public inspection.

Trunkline proposes to construct a 10-inch tap valve and a 10-inch tap valve and associated piping and electronic gas measurement equipment including RTU transmitters, electrical, instrumentation and communications equipment to provide firm transportation service of up to 120 Mmcf/d of natural gas to CLECO. The estimated cost of the proposed facilities would be approximately $262,000 and would be reimbursed by CLECO.

Any person of the Commission's staff may, within 45 days after the Commission has issued this notice, file pursuant to Rule 214 of the Commission's Procedural Rules (18 CFR 385.214) a motion to intervene or notice of intervention and pursuant to Section 157.205 of the Regulations under the NGA (18 CFR 157.205) a protest to the request. If no protest is filed within the allowed time, the proposed activity shall be deemed to be authorized effective the day after the time allowed for filing a protest. If a protest is filed and not withdrawn within 30 days after the time allowed for filing a protest, the instant request shall be treated as an application for authorization pursuant to Section 7 of the NGA.

Lois D. Cashell,

Secretary.

[FR Doc. 96–14350 Filed 6–6–96; 8:45 am]

BILLING CODE 6717–01–M

[Docket No. EC96–25–000, et al.]

InterCoast Power Marketing Company, et al.; Electric Rate and Corporate Regulation Filings

May 31, 1996.

Take notice that the following filings have been made with the Commission:

1. InterCoast Power Marketing Company

[Docket No. EC96–25–000]

Take notice that on May 29, 1996, InterCoast Power Marketing Company (IPM) filed an Application seeking any necessary approvals pursuant to Section 203 of the Federal Power Act to effect a Reorganization of IPM's parent company.

Comment date: June 18, 1996, in accordance with Standard Paragraph E at the end of this notice.

2. Amoco Power Resources Corporation

[Docket No. EG96–74–000]

On May 24, 1996, Amoco Power Resources Corporation, a Delaware Corporation, 200 WestLake Park Boulevard, P.O. Box 3092, Houston, Texas 77253–3092 (the ''Applicant''), filed with the Federal Energy Regulatory Commission an application for determination of exempt wholesale generator (''EWG'') status pursuant to Part 365 of the Commission's Regulations.

The Applicant states that it will be engaged indirectly, through an affiliate as defined in Section 2(a)(11)(B) of the Public Utility Holding Company Act of 1935, in owning and operating eligible facilities to be constructed in Argentina: the 77 MW Central Termica Patagonia power plant located near Comodoro Rivadavia, Argentina, consisting of two General Electric Frame–6 simple cycle gas turbine-generator sets and associated equipment and real estate. The turbines are natural gas-fired only.

Comment date: June 24, 1996, in accordance with Standard Paragraph E at the end of this notice. The Commission will limit its consideration of comments to those that concern the adequacy or accuracy of the application.

3. Energy Resource Marketing, Inc., Multi Energies USA Inc., Energy Transfer Group, L.L.C.

[Docket No. ER94–1580–006, Docket No. ER96–203–001, Docket No. ER96–280–001 (not consolidated)]

Take notice that the following informational filings have been made with the Commission and are on file and available for inspection and copying in the Commission's Public Reference Room:

On May 24, 1996, Energy Resource Marketing, Inc. filed certain information as required by the Commission's September 30, 1994, order in Docket No. ER94–1580–000.

On May 29, 1996, Multi Energies USA Inc. filed certain information as required by the Commission's December 8, 1995, order in Docket No. ER96–203–000.

On May 17, 1996, Energy Transfer Group, L.L.C. filed certain information as required by the Commission's January 29, 1996, order in Docket No. ER96–280–000.

4. Nevada Power Company

[Docket No. ER96–1482–000]

Take notice that on May 1, 1996, Nevada Power Company tendered for filing an amendment in the above-referenced docket.

Comment date: June 14, 1996, in accordance with Standard Paragraph E at the end of this notice.

5. Pacific Gas and Electric Company, San Diego Gas & Electric Company, Southern California Edison Company

[Docket No. ER96–1663–000]

Take notice that on May 29, 1996, Pacific Gas and Electric Company, San Diego Gas & Electric Company and Southern California Edison Company tendered for filing a Report on Horizontal Market Power Issues as a supplement to the Federal Power Act Section 205 filing previously made in the above-referenced docket.

Comment date: June 14, 1996, in accordance with Standard Paragraph E at the end of this notice.

6. Florida Power Corporation

[Docket No. ER96–1695–000]

Take notice that on May 23, 1996, Florida Power Corporation (Florida Power) submitted additional data in this Docket.

Comment date: June 14, 1996, in accordance with Standard Paragraph E at the end of this notice.

7. Cleveland Electric Illuminating Company

[Docket No. ER96–1793–000]

Take notice that on May 13, 1996, Cleveland Electric Illuminating Company (CEI) tendered for filing an Electric Power Service Agreement between CEI and IGM, Inc., Federal Energy Sales, Inc., Valero Power Service Company, Illinova Power Marketing, Inc., TransCanada Power Company, Southern Energy Marketing, Inc., and PanEnergy Power Services.

Comment date: June 13, 1996, in accordance with Standard Paragraph E at the end of this notice.

8. CPS Capital, Ltd.

[Docket No. ER96–1798–000]

Take notice that on May 13, 1996, CPS Capital, Ltd. tendered for filing an Application for Waivers, Blanket Authorizations, and Order Accepting Rate Schedule.

Comment date: June 13, 1996, in accordance with Standard Paragraph E at the end of this notice.

9. New England Power Pool

[Docket No. ER96–1871–000]

Take notice that on May 20, 1996, the New England Power Pool Executive Committee filed a signature page to the NEPOOL Agreement dated September 1, 1971, as amended, signed by Plum Street Enterprises, Inc. (Plum Street). The New England Power Pool Agreement, as amended, has been designated NEPOOL FPC No. 2.

The Executive Committee states that acceptance of the signature page would permit Plum Street to join the over 90 Participants that already participate in the Pool. NEPOOL, further states that the filed signature page does not change the NEPOOL Agreement in any manner, other than to make Plum Street a Participant in the Pool. NEPOOL requests an effective date on or before May 28, 1996, or as soon as possible thereafter for commencement of participation in the Pool by Plum Street.

Comment date: June 13, 1996, in accordance with Standard Paragraph E at the end of this notice.

Standard Paragraph

E. Any person desiring to be heard or to protest said filing should file a motion to intervene or protest with the Federal Energy Regulatory Commission, 888 First Street, NE, Washington, DC 20426, in accordance with Rules 211 and 214 of the Commission's Rules of Practice and Procedure (18 CFR 385.211 and 18 CFR 385.214). All such motions or protests should be filed on or before the comment date. Protests will be considered by the Commission in determining the appropriate action to be taken, but will not serve to make protestants parties to the proceeding. Any person wishing to become a party must file a motion to intervene. Copies of this filing are on file with the Commission and are available for public inspection.

Lois D. Cashell,

Secretary.

[FR Doc. 96–14346 Filed 6–6–96; 8:45 am]

BILLING CODE 6717–01–P

[Project Nos. 2232–312, et al.]

Hydroelectric Applications [Duke Power Company, et al.]; Notice of Applications

Take notice that the following hydroelectric applications have been filed with the Commission and are available for public inspection:

1 a. Type of Application: Application to Grant an Easement to SIHO Properties, Inc. to Construct a Private Marina.

b. Project Name and No: Catawba-Wateree Project, FERC Project No. 2232–312.

c. Date Filed: February 23, 1996.

d. Applicant: Duke Power Company.

e. Location: Catawba County, North Carolina, Bay Pointe Subdivision, Lake Norman.

f. Filed pursuant to: Federal Power Act, 16 U.S.C. § 791(a)- 825(r).

g. Applicant Contact: Mr. E. M. Oakley, Duke Power Company, P.O. Box 1006, Charlotte, North Carolina 28201, (704) 382–5778.

h. FERC Contact: Brian Romanek, (202) 219–3076.

i. Comment Date: July 8, 1996.

j. Description of the filing: Application to grant an easement of .54 of an acre to SIHO Properties, Inc. to construct a private marina consisting of 30 floating boat slips. The proposed marina would provide access to the reservoir for owners of off-water lots in the Bay Pointe Subdivision. The proposed marina would be constructed by using prefabricated floating slips, each 10-feet-wide by 20-feet-long. The slips would be anchored by using telescoping, self-driving pilings.

k. This notice also consists of the following standard paragraphs: B, C1, D2.

2 a. Type of Application: Application to Grant an Increase in Water Withdrawal to Lugoff Water District of Kershaw County, South Carolina.

b. Project Name and No: Catawba-Wateree Project, FERC Project No. 2232–321.

c. Date Filed: May 8, 1996.

d. Applicant: Duke Power Company.

e. Location: Lugoff, South Carolina, Kershaw County, Lake Wateree.

f. Filed pursuant to: Federal Power Act, 16 U.S.C. § 791(a)-825 (r).

g. Applicant Contact: Mr. E. M. Oakley, Duke Power Company, P.O. Box 1006, Charlotte, North Carolina 28201, (704) 382–5778.

h. FERC Contact: Brian Romanek, (202) 219–3076.

i. Comment Date: July 8, 1996.

j. Description of the filing: Application of Duke Power to grant an increase of water withdrawal capacity to Lugoff-Elgin Water Authority (Water Authority). Specifically, Duke Power requests permission to allow the Water Authority to: (1) Increase its water withdrawal from Lake Wateree from 3.0 million gallons per day (MGD) to up to 10.0 MGD; (2) to replace an existing pump with two 60 horsepower pumps and; (3) to construct a new 12 inch

water line within the project boundary. These modifications would provide the residents of Kershaw County with a source of drinking water that meets Environmental Protection Agency and State drinking water standards.

k. This notice also consists of the following standard paragraphs: B, C1, D2.

3 a. Type of Application: Application to Grant an Easement to the City of Camden, South Carolina for Raw Water Withdrawal from Lake Wateree.

b. Project Name and No: Catawba-Wateree Project, FERC Project No. 2232–322.

c. Date Filed: May 8, 1996.

d. Applicant: Duke Power Company.

e. Location: City of Camden, South Carolina, Eagles Nest Subdivision, Kershaw County, Lake Wateree.

f. Filed pursuant to: Federal Power Act, 16 U.S.C. § 791(a)–825(r).

g. Applicant Contact: Mr. E. M. Oakley, Duke Power Company, P.O. Box 1006, Charlotte, North Carolina 28201, (704) 382–5778.

h. FERC Contact: Brian Romanek, (202) 219–3076.

i. Comment Date: July 8, 1996.

j. Description of the filing: Application of Duke Power Company to grant an easement for raw water withdrawal and installation of a water withdrawal system to the City of Camden, South Carolina. Specifically, Duke Power requests permission to grant an easement of 1.47 acres of project property to the City of Camden, withdraw of up to 6 million gallons per day (MGD) of raw water and to install a submerged intake pipe and screen system within the project boundary to provide treated drinking water to the residents of the City of Camden. The location of the intake facility would be at the Eagles Nest subdivision on the southeast shore of Lake Wateree.

k. This notice also consists of the following standard paragraphs: B, C1, D2.

4 a. Type of Application: Application to Grant an Easement to Allow Increased Water Withdrawal by the Town of Valdese.

b. Project Name and No: Catawba-Wateree Project, FERC Project No. 2232–323.

c. Date Filed: February 20, 1996.

d. Applicant: Duke Power Company.

e. Location: Town of Valdese, North Carolina, Burke County, Lake Rodhiss.

f. Filed pursuant to: Federal Power Act, 16 U.S.C. § 791(a)–825(r).

g. Applicant Contact: Mr. E. M. Oakley, Duke Power Company, P.O. Box 1006, Charlotte, North Carolina 28201, (704) 382–5778.

h. FERC Contact: Brian Romanek, (202) 219–3076.

i. Comment Date: July 8, 1996.

j. Description of the filing: Application of Duke Power to grant an easement of 0.04 of an acre of project property to the Town of Valdese to increase its raw water withdrawal capacity from 8 million gallons per day (MGD) to 12 MGD. Specifically, Duke Power requests permission to grant the easement and to allow the Town to replace the existing 12 MGD pumps, replace the existing intake structure, and to install a new 24-inch-diameter intake pipe and screen.

k. This notice also consists of the following standard paragraphs: B, C1, D2.

5 a. Type of Application: Surrender of License.

b. Project No: 2696–004.

c. Date Filed: May 17, 1996.

d. Applicant: Niagara Mohawk Power Corp.

e. Name of Project: Stuyvesant Falls Project.

f. Location: Kinderhook Creek, Columbia County, New York.

g. Filed Pursuant to: Federal Power Act, 16 U.S.C., Section 791(a)–825(r).

h. Applicant Contact: Mr. Samuel Hirschey, Niagara Mohawk Power Corp., 300 Erie Boulevard West, Syracuse, NY 13202, (315) 428–5561.

i. FERC Contact: Hillary Berlin, (202) 219–0038.

j. Comment Date: July 8, 1996.

k. Description of Application The licensee states that the project is not operational due to pipeline leakage problems, and that the problems cannot be remedied economically.

l. The notice also consists of the following standard paragraphs: B, C1, and D2.

Standard Paragraphs

B. Comments, Protests, or Motions to Intervene—Anyone may submit comments, a protest, or a motion to intervene in accordance with the requirements of Rules of Practice and Procedure, 18 CFR 385.210, .211, .214. In determining the appropriate action to take, the Commission will consider all protests or other comments filed, but only those who file a motion to intervene in accordance with the Commission's Rules may become a party to the proceeding. Any comments, protests, or motions to intervene must be received on or before the specified comment date for the particular application.

C1. Filing and Service of Responsive Documents—Any filings must bear in all capital letters the title ''COMMENTS'', ''RECOMMENDATIONS FOR TERMS AND CONDITIONS'', ''PROTEST'', OR ''MOTION TO INTERVENE'', as applicable, and the Project Number of the particular application to which the filing refers. Any of the above-named documents must be filed by providing the original and the number of copies provided by the Commission's regulations to: The Secretary, Federal Energy Regulatory Commission, 888 First Street, N.E., Washington, D.C. 20426. A copy of any motion to intervene must also be served upon each representative of the Applicant specified in the particular application.

D2. Agency Comments—Federal, state, and local agencies are invited to file comments on the described application. A copy of the application may be obtained by agencies directly from the Applicant. If an agency does not file comments within the time specified for filing comments, it will be presumed to have no comments. One copy of an agency's comments must also be sent to the Applicant's representatives.

Dated: May 31, 1996.

Lois D. Cashell,

Secretary.

[FR Doc. 96–14392 Filed 6–6–96; 8:45 am]

BILLING CODE 6717–01–P

[Project Nos. 2535–014 et al.]

Hydroelectric Applications (South Carolina Electric and Gas Company, et al.); Notice of Applications

Take notice that the following hydroelectric applications have been filed with the Commission and are available for public inspection:

1 a. Type of Application: Transfer of License.

b. Project No.: P–2535–014.

c. Date Filed: April 25, 1996.

d. Applicant: South Carolina Electric and Gas Company.

e. Name of Project: Stevens Creek Project.

f. Location: On the Savannah River in Columbia County, Georgia and Edgefield and McCormick Counties, South Carolina.

g. Filed Pursuant to: Federal Power Act, 16 U.S.C. § 791(a)–825(r).

h. Applicant Contact: Mr. Randolph R. Mahan, Associate General Counsel, SCANA Corporation, Columbia, SC 29218, (803) 748–3538.

i. FERC Contact: John McEachern, (202) 219–3056.

j. Comment Date: July 5, 1996.

k. Description of Application: South Carolina Electric and Gas Company (SCE&G), licensee, and Canal Industries, Inc. (Canal) request that the licensee transfer interests in project property from SCE&G to Canal.

l. This notice also consists of the following standard paragraphs: B, C2, and D2.

2 a. Type of Application: Surrender of Exemption (5MW or Less).

b. Project No.: 9179–002.

c. Date Filed: February 13, 1996.

d. Applicant: Wayne J. Krieger and Collen A. Krieger.

e. Name of Project: Skyview Project.

f. Location: Near Euchre Creek in Curry County, Oregon.

g. Filed Pursuant to: Federal Power Act, 16 U.S.C. § 791(a)–825(r).

h. Applicant Contact: Wayne J. Krieger, 95702 Skyview Ranch Road, Gold Beach, Oregon 97444, (503)247–7990.

i. FERC Contact: Tom Papsidero, (202) 219–2715.

j. Comment Date: July 5, 1996.

k. Description of Action: The existing project, for which the exemption is being surrendered, consists of: (1) an 8-inch diameter, 1,960-foot-long PVC penstock commencing in a farm pond catch basin; and (2) a powerhouse containing a single generating unit with a capacity of 37-kW and an average annual generation of 86 MWh.

The exemptee is requesting surrender of the exemption because the project is not economically feasible.

l. This notice also consists of the following standard paragraphs: B, C1, and D2.

3 a. Type of filing: Notice of Intent to File Application for New License.

b. Project No.: 597.

c. Date filed: June 8, 1995.

d. Submitted By: PacifiCorp, current licensee.

e. Name of Project: Stairs.

f. Location: On the Big Cottonwood Creek in Salt Lake County, Utah, affecting lands of the Wasatch National Forest.

g. Filed Pursuant to: Section 15 of the Federal Power Act, 18 CFR 16.6 of the Commission's regulations.

h. Effective date of original license: March 1, 1977.

i. Expiration date of original license: June 30, 2000.

j. The project consists of a small earthfill diversion dam, a 48-inch-diameter concrete pipe intake through the base of the dam, a 48-inch-diameter 3,000-foot-long riveted steel penstock, and a powerhouse with an installed capacity of 1,000 kW.

k. Pursuant to 18 CFR 16.7, information on the project is available at: PacifiCorp, 920 SW 6th Avenue, Portland, OR 97204, Phone: (503) 464–5343.

l. FERC contact: Hector M. Perez (202) 219–2843.

m. Pursuant to 18 CFR 16.9(b)(1) each application for a new license and any competing license applications must be filed with the Commission at least 24 months prior to the expiration of the existing license. All applications for license for this project must be filed by June 30, 1998.

4 a. Type of filing: Notice of Intent to File Application for New License.

b. Project No.: 696.

c. Date filed: October 30, 1995.

d. Submitted By: PacifiCorp, current licensee.

e. Name of Project: American Fork.

f. Location: On the American Fork Creek in Utah County, Utah, within the Uinta National Forest.

g. Filed Pursuant to: Section 15 of the Federal Power Act, 18 CFR 16.6 of the Commission's regulations.

h. Effective date of original license: November 1, 1975.

i. Expiration date of original license: October 31, 2000.

j. The project consists of a concrete diversion dam, a 2.3-mile-long 28-inch-diameter steel flowline, a riveted steel penstock, a powerhouse with an installed capacity of 950 kW, and a 6.5-mile-long 12.5 kV transmission line.

k. Pursuant to 18 CFR 16.7, information on the project is available at: PacifiCorp, 920 SW 6th Avenue, Portland, OR 97204, Phone: (503) 464–5343.

l. FERC contact: Hector M. Perez (202) 219–2843.

m. Pursuant to 18 CFR 16.9(b)(1) each application for a new license and any competing license applications must be filed with the Commission at least 24 months prior to the expiration of the existing license. All applications for license for this project must be filed by October 31, 1998.

5 a. Type of filing: Notice of Intent to File Application for New License.

b. Project No.: 2058.

c. Date filed: January 16, 1996.

d. Submitted By: Washington Water Power Company, current licensee.

e. Name of Project: Cabinet Gorge.

f. Location: On the Clark Fork and Oreille River in Bonner County, Idaho and Sanders County, Montana.

g. Filed Pursuant to: Section 15 of the Federal Power Act, 18 CFR 16.6 of the Commission's regulations.

h. Effective date of original license: January 10, 1951.

i. Expiration date of original license: January 9, 2001.

j. The project consists of a dam, a reservoir about 20 miles long with a surface area of 3,200 acres, a powerhouse with a total installed capacity of 231,300 kW, and other appurtenances.

k. Pursuant to 18 CFR 16.7, information on the project is available at: The Washington Water Power Company, East 1411v Mission Avenue, Spokane, Washington 99220.

l. FERC contact: Hector M. Perez (202) 219–2843.

m. Pursuant to 18 CFR 16.9(b)(1) each application for a new license and any competing license applications must be filed with the Commission at least 24 months prior to the expiration of the existing license. All applications for license for this project must be filed by January 9, 1999.

6 a. Type of filing: Notice of Intent to File Application for New License.

b. Project No.: 2071.

c. Date filed: February 12, 1996.

d. Submitted By: PacifiCorp, current licensee.

e. Name of Project: Yale.

f. Location: On the North Fork of the Lewis River in Clark and Cowlitz Counties, Washington.

g. Filed Pursuant to: Section 15 of the Federal Power Act, 18 CFR 16.6 of the Commission's regulations.

h. Effective date of original license: May 1, 1951.

i. Expiration date of original license: April 30, 2001.

j. The project consists of a 323-foot-high main dam, a 37-foot-high saddle dam, a powerhouse with a total installed capacity of 134,000 kW, and other appurtenances.

k. Pursuant to 18 CFR 16.7, information on the project is available at: PacifiCorp, 920 SW 6th Avenue, Portland, OR 97204, Phone: (503) 464–5343.

l. FERC contact: Hector M. Perez (202) 219–2843.

m. Pursuant to 18 CFR 16.9(b)(1) each application for a new license and any competing license applications must be filed with the Commission at least 24 months prior to the expiration of the existing license. All applications for license for this project must be filed by October 1, 1999.

7 a. Type of filing: Notice of Intent to File Application for New License.

b. Project No.: 2401.

c. Date filed: April 4, 1996.

d. Submitted By: PacifiCorp, current licensee.

e. Name of Project: Grace-Cove.

f. Location: On the Bear River in Caribou County, Idaho.

g. Filed Pursuant to: Section 15 of the Federal Power Act, 18 CFR 16.6 of the Commission's regulations.

h. Effective date of original license: May 1, 1965.

i. Expiration date of original license: October 1, 2001.

j. The project consists of two developments. The Grace Development consists of a rock filled timber crib dam

which impounds 250 acre-feet of water, a 26,000-foot-long, 11-foot-diameter flowline, two surge tanks, two 90-inch-diameter steel penstocks, and a powerhouse with a total installed capacity of 33,000 kW.

The Cove Development consists of a concrete dam which impounds 65 acre-feet of water, a 5,700-foot-long wooden flume, a 550-foot-long diameter steel penstock and a powerhouse with an installed capacity of 7,500 kW.

k. Pursuant to 18 CFR 16.7, information on the project is available at: PacifiCorp, 920 SW 6th Avenue, Portland, OR 97204, Phone: (503) 464–5343.

l. FERC contact: Hector M. Perez (202) 219–2843.

m. Pursuant to 18 CFR 16.9(b)(1) each application for a new license and any competing license applications must be filed with the Commission at least 24 months prior to the expiration of the existing license. All applications for license for this project must be filed by October 1, 1999.

Standard Paragraphs

B. Comments, Protests, or Motions to Intervene—Anyone may submit comments, a protest, or a motion to intervene in accordance with the requirements of Rules of Practice and Procedure, 18 CFR 385.210, .211, .214. In determining the appropriate action to take, the Commission will consider all protests or other comments filed, but only those who file a motion to intervene in accordance with the Commission's Rules may become a party to the proceeding. Any comments, protests, or motions to intervene must be received on or before the specified comment date for the particular application.

C1. Filing and Service of Responsive Documents—Any filings must bear in all capital letters the title ''COMMENTS'', ''RECOMMENDATIONS FOR TERMS AND CONDITIONS'', ''PROTEST'', OR ''MOTION TO INTERVENE'', as applicable, and the Project Number of the particular application to which the filing refers. Any of the above-named documents must be filed by providing the original and the number of copies provided by the Commission's regulations to: The Secretary, Federal Energy Regulatory Commission, 888 First Street, N.E., Washington, D.C. 20426. A copy of any motion to intervene must also be served upon each representative of the Applicant specified in the particular application.

C2. Filing and Service of Responsive Documents—Any filings must bear in all capital letters the title ''COMMENTS,'' ''RECOMMENDATIONS FOR TERMS AND CONDITIONS,'' ''NOTICE OF INTENT TO FILE COMPETING APPLICATION,'' ''COMPETING APPLICATION,'' ''PROTEST,'' or ''MOTION TO INTERVENE,'' as applicable, and the Project Number of the particular application to which the filing refers. Any of these documents must be filed by providing the original and the number of copies provided by the Commission's regulations to: The Secretary, Federal Energy Regulatory Commission, 888 First Street, N.E., Washington, D.C. 20426. A copy of a notice of intent, competing application, or motion to intervene must also be served upon each representative of the Applicant specified in the particular application.

D2. Agency Comments—Federal, state, and local agencies are invited to file comments on the described application. A copy of the application may be obtained by agencies directly from the Applicant. If an agency does not file comments within the time specified for filing comments, it will be presumed to have no comments. One copy of an agency's comments must also be sent to the Applicant's representatives.

Dated: May 29, 1996.

Lois D. Cashell,

Secretary.

[FR Doc. 96–14394 Filed 6–6–96; 8:45 am]

BILLING CODE 6717–01–P

[Docket No. CP96–519–000, et al.]

NorAm Gas Transmission Company, et al.; Natural Gas Certificate Filings

May 31, 1996.

Take notice that the following filings have been made with the Commission:

1. NorAm Gas Transmission Company

[Docket No. CP96–519–000]

Take notice that on May 13, 1996, as supplemented on May 28, 1996, NorAm Gas Transmission Company (NGT), 1600 Smith Street, Houston, Texas 77002, filed in Docket No. CP96–519–000, a request pursuant to Sections 157.205, 157.211 and 157.216 of the Commission's Regulations under the Natural Gas Act (18 CFR 157.205, 18 CFR 157.211, and 157.216) for authorization under its blanket certificate issued in Docket Nos. CP82–384–000 and CP82–384–001, pursuant to Section 7 of the Natural Gas Act, to abandon certain facilities in Arkansas and Louisiana and to operate their existing replacement facilities as jurisdictional facilities to provide transportation services under Subpart G of Part 284 of the Commission's regulations, all as more fully set forth in the request which is on file with the Commission and open to public inspection.

NGT requests authority, pursuant to 18 CFR 157.216, to abandon one 2-inch tap and 2-inch U-Shape meter station located on NGT's N Line in Caddo Parish, Louisiana. NGT relates that these facilities were originally installed in 1952, and certificated in Docket No. G–252, to serve ARKLA, a distribution division of NorAM Energy Corp. (ARKLA). Additionally, NGT requests authority, pursuant to 18 CFR 157.216, to abandon two 1-inch first-cut regulators located on NGT's Line TM–3 in Hot Spring County, Arkansas. NGT relates that these facilities were originally installed in 1967, and certificated in Docket No. CP67–83–000, to serve ARKLA. NGT says no service is to be abandoned, and the abandoned facilities will be reclaimed.

NGT seeks authority to operate the existing 4-inch tap and 4-inch Skid-mounted meter station (which replaced the one 2-inch tap and 2-inch U-Shape meter station) on NGT's Line N in Section 30, Township 17 North, Range 14 West, Caddo Parish, Louisiana in order to provide transportation services under Subpart G of Part 284 of the Commission's regulations. NGT states that these facilities were installed in April 1996, solely to provide services authorized under Section 311 of the NGPA and Subpart B of the Commission's regulations, to serve ARKLA's request for increased volumes. NGT states the estimated volumes to be delivered are approximately 127,000 MMBtu annually and 400 MMBtu on a peak day on an interruptible basis. NGT says these facilities were constructed at an estimated cost of $24,193 and ARKLA will reimburse NGT the total construction cost.

NGT seeks authority to operate two existing 1-inch Moonne first-cut regulators (which replaced the two 1-inch first-cut regulators) located on NGT's Line TM–3 in Section 16, Township 4 South, Range 16 West, Hot Spring County, Arkansas in order to provide transportation services under Subpart G of Part 284 of the Commission's regulations. NGT states these facilities were installed in March 1996, solely to provide services authorized under Section 311 of the NGPA and Subpart B of the Commission's regulations to serve ARKLA's distribution customers at its existing Malvern Town Border Station. NGT states the estimated volumes to be delivered through these facilities are

approximately 1,460,000 MMBtu annually and 4,000 MMBtu on a peak day on an interruptible basis. NGT says that the facilities were constructed at an estimated cost of $6,834, and ARKLA will reimburse NGT $5,150 of the construction cost.

Comment date: July 15, 1996, in accordance with Standard Paragraph G at the end of this notice.

2. UtiliCorp Pipeline Systems, Inc., Complainant, v. Panhandle Eastern Pipe Line Company, Respondent

[Docket No. CP96–538–000]

Take notice that on May 23, 1996, UtiliCorp Pipeline Systems, Inc. (UPL), 10700 East 350 Highway, Kansas City, Missouri, 64138, filed a complaint in Docket No. CP96–538–000, pursuant to Section 5 of the Natural Gas Act and Rule 206 of the Commission's Rules of Practice and Procedure. UPL charges that Panhandle Eastern Pipe Line Company (Panhandle) has acted in an unduly discriminatory and anticompetitive manner, and requests that Panhandle be ordered to provide an interconnection in Cass County, Missouri, with facilities to be owned by UPL's intrastate pipeline subsidiary, Missouri Pipeline Company (Missouri Pipeline), all as more fully set forth in the complaint which is on file with the Commission and open to public inspection.

UPL also requests that, to the extent that the Commission finds that additional procedures, such as a show cause proceeding or an evidentiary hearing, are required to resolve the complaint, its complaint be consolidated with the previously filed complaints against Panhandle by Missouri Gas Energy (MGE) in Docket No. CP95–755 and by Mid Continent Market Center in Docket No. CP96–270. UPL states that the evidentiary record is more developed in those proceedings and they involve nearly identical facts and legal questions as represented in UPL's complaint.

Missouri Pipeline, a wholly-owned subsidiary of UPL, plans to acquire an abandoned oil pipeline and to convert a portion of the line to natural gas service as an intrastate pipeline extending about 32 miles from a point near Freeman, Missouri to a terminus near Sugar Creek in Jackson County, Missouri. Missouri Pipeline will use this pipeline, referred to as the Hawthorne project, to provide high pressure natural gas service to the Kansas City Power & Light Company Hawthorne Power Plant. The Hawthorne project will also have several other delivery points into MGE's local distribution system.

UPL states that it requested that Panhandle provide an interconnection with the Hawthorne project facilities, and offered to pay all the costs of the interconnection. UPL states that Panhandle responded that unless UPL had incremental firm transportation agreements for service into the Hawthorne project facilities, Panhandle would not allow an interconnection. UPL avers that Panhandle has, at other times and places, been willing to provide interconnections for interruptible service to end-users, but refuses to provide interconnections for potential competitors such as UPL, MGE, and Mid Continent Market Center.

Comment date: June 21, 1996, in accordance with the first paragraph of Standard Paragraph F at the end of this notice. Answers to the Complaint shall also be due on or before June 21, 1996.

3. Panhandle Eastern Pipe Line Company

[Docket No. CP96–542–000]

Take notice that on May 24, 1996, Panhandle Eastern Pipe Line Company (Panhandle), P.O. Box 1642, Houston, Texas 77251 filed in Docket No. CP96–542–000, a petition pursuant to Section 16 of the Natural Gas Act (NGA) and Rule 207(a)(2) of the Commission's Rules of Practice and Procedure (18 CFR 385.207 (a)(2)), for a declaratory order concerning the present and future jurisdictional status of Mid Continent Market Center, Inc. (Mid Continent). Panhandle's reasons for its request are all more fully set forth in the petition which is on file with the Commission and open to public inspection.

Mid Continent was granted an NGA Section 1(c) ''Hindshaw'' exemption and a Section 284.224 Blanket Certificate by the Commission in 1995, see order at 72 FERC ¶ 62,274. Mid Continent has a complaint pending with the Commission against Panhandle in Docket Nos. CP96–270–000 and 001, see notices at 61 *FR* 18132 and 61 *FR* 25854. The complaint(s) concerns Panhandle's interconnection with KN Interstate Transmission Company's (KN Interstate) Haven Line pipeline segment in Reno County, Kansas. Mid Continent intends to buy the Haven Line from KN Interstate and construct a 9-mile pipeline segment to connect its system to the Haven Line.

Once such facilities are constructed and such pipeline interconnections are available to Mid Continent, Panhandle says that Mid Continent will no longer qualify for its Hindshaw exemption, because Mid Continent will be able to, and intends to, transport natural gas in interstate commerce for ultimate consumption outside the state of Kansas. Panhandle furthers says that Mid Continent will then have to file with the Commission for various certificate authorizations under Section 7 of the NGA, if it wants to initiate such interstate transportation services. Panhandle says that Mid Continent will have an unfair competitive advantage over jurisdictional interstate pipelines who have substantially more regulatory requirements, if Mid Continent is allowed to continue to operate under its Hindshaw exemption.

Panhandle petitions the Commission to make a finding that Mid Continent will no longer qualify for its Hindshaw exemption from the Commission's jurisdiction, and that Mid Continent will become a ''natural gas company'' subject to the Commission's jurisdiction, if Mid Continent completes its purchase of the Haven Line. Panhandle also wants the Commission to confirm that as a natural gas company, Mid Continent cannot continue its interstate operations unless it is granted:

(1) A Section 7(c) certificate to acquire the Haven Line;

(2) A Section 7(c) certificate to construct and/or operate any facilities connected to the Haven Line;

(3) A Section 284.221 Blanket Certificate; and,

(4) Approval of a Part 284 open access FERC Gas Tariff.

Further, Panhandle suggests that Mid Continent may be presently providing substantial interstate transportation service between various interstate pipelines within the state of Kansas, rather than interstate transportation service for its parent company, Western Resources, Inc., a local distribution company (LDC) in Kansas, and that LDC's customers. Panhandle says that Mid Continent's Hindshaw exemption was based on the later and intimates that Mid Continent's Hindshaw exemption may already be in jeopardy in light of the various recent Commission rulings cited.

Comment date: June 21, 1996, in accordance with the first paragraph of Standard Paragraph F at the end of this notice.

4. Transcontinental Gas Pipe Line Corporation

[Docket No. CP96–545–000]

Take notice that on May 29, 1996, Transcontinental Gas Pipe Line Corporation (Transco), P. O. Box 1396, Houston, Texas 77251, filed in Docket No. CP96–545–000 an application pursuant to Section 7(c) of the Natural Gas Act for a certificate of public convenience and necessity for authorization to construct and operate

certain pipeline facilities on Transco's system in order to create additional firm transportation capacity of the dekatherm equivalent of 115,000 Mcf of gas per day (Mcf/d) from points of receipt on Transco's Leidy Line to points of delivery in Transco's Northeast Market area by a proposed in-service date of November 1, 1997 (the SeaBoard Expansion Project), all as more fully set forth in the application which is on file with the Commission and open to public inspection.

Transco states that the firm transportation service under the SeaBoard Expansion Project will be provided to seven shippers under Rate Schedule FT of Transco's FERC Gas Tariff, Volume No. 1, and Transco's blanket certificate under Part 284(G) of the Commission's regulations, and therefore, the SeaBoard firm transportation service will be subject to the terms and conditions of Transco's tariff as amended from time-to-time. Transco states that the Seaboard shippers have committed to firm transportation service for terms ranging from 15 to 21 years subject to the receipt of necessary regulatory approvals (including rolled-in rates) and the construction of the necessary facilities. It is stated that the SeaBoard Expansion Project will provide SeaBoard shippers with access to diverse natural gas supply sources at the Leidy area, including but not limited to, gas supplies sources on three interconnecting pipelines, purchased from suppliers, or delivered from third party storage providers at Leidy, Pennsylvania.

In order to provide the firm transportation service to the SeaBoard shippers, Transco proposes to construct, install and operate five pipeline loop segments and add a 15,000 horsepower (hp) compressor at its existing Compressor Station No. 205.

Transco states that it conducted an open season from August 7 through September 6, 1995, during which requests were accepted for up to 115,000 Mcf/d of firm transportation from points of receipt on Transco's Leidy Line to most points of delivery on the Transco system. As a result of the open season, Transco contends that it executed precedent agreements with seven shippers for a total of 115,000 Mcf/d of firm transportation capacity, fully subscribing the project. It is stated that the list of shippers participating in the SeaBoard Expansion Project and their corresponding transportation quantities and contract terms are set forth in the following table.

Shipper	Contract term (Yrs)	Total transportation contract quantity (Mcf/d)
Delmarva Power & Light Company	20	5,000
Enron Capital & Trade Resources Corp.	15	28,985
Penn Fuel Gas, Inc.	20	1,500
Pennsylvania Gas & Water Company	20	39,515
Renaissance Energy, Inc.	15	15,000
Sun Company, Inc.	21	15,000
Union Pacific Fuels, Inc.	15	10,000
Total	.....	115,000

Consistent with the Commission's Statement of Policy and after the facilities necessary to serve the market for the Project had generally been determined, Transco states that it solicited permanent capacity relinquishment offers to be effective on November 1, 1997 from existing shippers not submitting open season nominations to reduce the costs of the SeaBoard Expansion Project, to prevent the construction of unnecessary facilities, and to make use of unwanted firm capacity on the Transco system. Transco states that it received permanent capacity release offers from The Brooklyn Union Gas Company and Williams Energy Services Company (WESCO). Transco further states that it determined that the capacity offered in these release offers would not reduce the facilities required to provide firm service to the SeaBoard shippers. In addition, it is stated that the release capacity offered by WESCO was located outside the capacity path of the Project. Transco avers that it also received conditional capacity release offers from Public Service Electric & Gas Company (PSE&G) and UGI Utilities, Inc. (UGI) which were expressly contingent upon those shippers receiving an equivalent amount of firm transportation service in the SeaBoard Expansion Project. It is stated that the conditional nature of the capacity release offers was contrary to the Commission's Statement of Policy and to the purpose for which Transco solicited these offers which was to make use of unwanted firm transportation capacity on the system. Transco states that PSE&G and UGI were given the opportunity of either participating in the SeaBoard Expansion Project or offering permanently released capacity on an unconditional basis; however, both PSE&G and UGI declined.

In order to create the 115,000 Mcf/d of capacity to provide firm transportation service to the SeaBoard shippers, Transco proposes to construct and operate the following facilities:

(1) 10.57 miles of 36-inch diameter pipeline loop beginning at milepost 161.29 in Lycoming County, Pennsylvania and ending at milepost 171.86 in Clinton County, Pennsylvania.

(2) 6.67 miles of 36-inch diameter pipeline loop beginning at milepost 142.74 in Lycoming County, Pennsylvania and ending at milepost 149.41 in Lycoming County, Pennsylvania.

(3) 5.46 miles of 42-inch diameter pipeline loop beginning at milepost 1802.73 in Middlesex County, New Jersey and ending at milepost 1808.19 in Union County, New Jersey.

(4) 7.10 miles of 36-inch diameter pipeline loop beginning at milepost 18.96 in Burlington County, New Jersey and ending at milepost 26.06 in Burlington County, New Jersey.

(5) The replacement of an existing 6.3 miles of 12-inch diameter pipeline loop beginning at milepost 30.53 and ending at milepost 36.83 in Burlington County, New Jersey, with a 36-inch diameter pipeline loop. The 12-inch pipeline segment will be removed and the 36-inch replacement pipeline will be installed in the same trench.

(6) The addition of a new 15,000 hp, electric motor-driven compressor unit at Transco's existing Compressor Station 205 located at milepost 1773.30 in Mercer County, New Jersey.

(7) Modifications to the existing Milltown regulator station located at milepost 1790.84 in Middlesex, New Jersey, to increase the discharge

pressure into Transco's mainline E to 800 psig.

(8) Modifications to the existing Linden regulator station located at milepost 1808.19 in Union County, New Jersey, to reduce the pressure in Transco's 42-inch Mainline E from 800 psig to 638 psig.

(9) Addition of a 12-inch tap on Transco's existing Mainline A at milepost 1711.67 in Chester County, Pennsylvania to tie-in to an existing Transco 16-inch lateral.

(10) Installation of a pressure control valve and related piping, and a 290 hp nameplate uprating of six existing reciprocating engines (for a total nameplate uprating of 1,740 hp) at Transco's existing Compressor Station 200 located at milepost 1722.24 in Chester County, Pennsylvania.

Transco estimates that the proposed facilities will cost $117.7 million. Transco requests that the Commission grant rolled-in rate treatment of the costs of the SeaBoard facilities in Transco's next Section 4 rate proceeding which becomes effective following the in-service date of the Project. It is stated that the rate impact on existing customers of rolling in the costs of the SeaBoard Expansion Project is below the five percent threshold specified in the Commission's Statement of Policy, 71 FERC ¶ 61,241 (1995), for establishing a presumption in favor of rolled-in rates and the Project will produce significant system-wide operational and financial benefits and will be operated on an integrated basis with its existing facilities.

To meet the proposed in-service date for the SeaBoard Expansion Project, Transco requests that the Commission issue a preliminary determination approving all aspects of the application other than environmental matters by November 1, 1996, with a final determination and all appropriate certificate authorizations by January 24, 1997.

Comment date: June 21, 1996, in accordance with Standard Paragraph F at the end of this notice.

Standard Paragraphs

F. Any person desiring to be heard or make any protest with reference to said filing should on or before the comment date file with the Federal Energy Regulatory Commission, 888 First Street, N.E., Washington, D.C. 20426, a motion to intervene or a protest in accordance with the requirements of the Commission's Rules of Practice and Procedure (18 CFR 385.211 and 385.214) and the Regulations under the Natural Gas Act (18 CFR 157.10). All protests filed with the Commission will be considered by it in determining the appropriate action to be taken but will not serve to make the protestants parties to the proceeding. Any person wishing to become a party to a proceeding or to participate as a party in any hearing therein must file a motion to intervene in accordance with the Commission's Rules.

Take further notice that, pursuant to the authority contained in and subject to jurisdiction conferred upon the Federal Energy Regulatory Commission by Sections 7 and 15 of the Natural Gas Act and the Commission's Rules of Practice and Procedure, a hearing will be held without further notice before the Commission or its designee on this filing if no motion to intervene is filed within the time required herein, if the Commission on its own review of the matter finds that a grant of the certificate is required by the public convenience and necessity. If a motion for leave to intervene is timely filed, or if the Commission on its own motion believes that a formal hearing is required, further notice of such hearing will be duly given.

Under the procedure herein provided for, unless otherwise advised, it will be unnecessary for the applicant to appear or be represented at the hearing.

G. Any person or the Commission's staff may, within 45 days after the issuance of the instant notice by the Commission, file pursuant to Rule 214 of the Commission's Procedural Rules (18 CFR 385.214) a motion to intervene or notice of intervention and pursuant to Section 157.205 of the Regulations under the Natural Gas Act (18 CFR 157.205) a protest to the request. If no protest is filed within the time allowed therefore, the proposed activity shall be deemed to be authorized effective the day after the time allowed for filing a protest. If a protest is filed and not withdrawn within 30 days after the time allowed for filing a protest, the instant request shall be treated as an application for authorization pursuant to Section 7 of the Natural Gas Act.

Lois D. Cashell,

Secretary.

[FR Doc. 96–14347 Filed 6–6–96; 8:45 am]

BILLING CODE 6717–01–P

ENVIRONMENTAL PROTECTION AGENCY

[FRL–5516–2]

Agency Information Collection Activities Up for Renewal; Monthly Progress Reports.

AGENCY: Environmental Protection Agency (EPA).

ACTION: Notice.

SUMMARY: In compliance with the Paperwork Reduction Act (44 U.S.C. 3501 *et seq.*), this notice announces that EPA is planning to submit the following continuing Information Collection Request (ICR) to the Office of Management and Budget (OMB): Monthly Progress Reports, OMB Control Number 2030–0005. Before submitting the ICR to OMB for review and approval, EPA is soliciting comments on specific aspects of the proposed information collection as described below.

DATES: Comments must be submitted on or before August 6, 1996.

ADDRESSES: Environmental Protection Agency, Office of Acquisition Management (3802F), 401 M Street, S.W., Washington, D.C. 20460. Attention: Edward N. Chambers.

FOR FURTHER INFORMATION CONTACT: Edward N. Chambers. (202) 260–6028 / FAX: (202) 260–1203 / CHAMBERS.ED@EPAMAIL.EPA.GOV

SUPPLEMENTARY INFORMATION:

Affected entities: Entities potentially affected by this action are EPA contractors.

Title: Monthly Progress Reports, OMB Control Number 2030–0005, expiration date 11–30–96.

Abstract: On a monthly basis, contractors are required to provide a progress report detailing what was accomplished on the contract for that period of time, what remains to be done, as well as a general listing of expenditures for that period of time. This allows EPA to monitor the efficiency and cost effectiveness of the work being performed. Once the information is received, it is reviewed against existing financial data, contractor deliverables, invoices, and agency records for verification. These reports are prescribed under clauses in EPA contracts.

Monthly progress reports contain confidential business information and are protected from release in accordance with 40 CFR Part 2. No sensitive information is required.

An agency may not conduct or sponsor, and a person is not required to respond to, a collection of information

unless it displays a currently valid OMB control number. The OMB control numbers for EPA's regulations are listed in 40 CFR Part 9 and 48 CFR Chapter 15.

The EPA would like to solicit comments:

(i) to evaluate whether the proposed collection of information is necessary for the proper performance of the functions of the agency, including whether the information will have practical utility;

(ii) to evaluate the accuracy of the Agency's estimate of the burden of the proposed collection of information, including the validity of the methodology and assumptions used;

(iii) to enhance the quality, utility, and clarity of the information to be collected; and

(iv) to minimize the burden of the collection of information on those who are to respond, including through the use of appropriate automated electronic, mechanical, or other technological collection techniques or other forms of information technology, e.g., permitting electronic submission of responses.

Burden Statement: The annual burden for this collection is estimated to average 516 hours for each Agency contract. This represents an average of 43 hours for each monthly progress report. Since EPA currently has 398 contracts requiring monthly progress reports , the total annual burden for all respondents is estimated at 205,368 hours (398 contracts x 516 hours per contract). The total number of responses is estimated at 4,776 (398 contracts x 12 months). The annual cost of this collection for each contract is estimated at $34,308 ($2,859 per report x 12 months). The annual costs for all respondents is estimated at $13,654,584 ($34,308 per contract x 398 contracts).

Burden means the total time, effort, or financial resources expended by persons to generate, maintain, retain, or disclose or provide information to or for a Federal agency. This includes the time needed to review instructions; to develop, acquire, install, and utilize technology and systems for the purposes of collecting, validating, and verifying information, processing and maintaining information, and disclosing and providing information; to adjust the existing ways to comply with any previously applicable instructions and requirements; to train personnel to be able to respond to a collection of information; to search data sources; to complete and review the collection of information; and to transmit or otherwise disclose the information.

Dated: May 31, 1996.

Susan Kantrowitz,

Acting Director, Policy, Training and Oversight Division.

[FR Doc. 96–14459 Filed 6–6–96; 8:45 am]

BILLING CODE 6560–50–P

[FRL–5516–1]

Agency Information Collection Activities Up for Renewal; Oral and Written Purchase Orders

AGENCY: Environmental Protection Agency (EPA).

ACTION: Notice.

SUMMARY: In compliance with the Paperwork Reduction Act (44 U.S.C. 3501 *et seq.*), this notice announces that EPA is planning to submit the following continuing Information Collection Request (ICR) to the Office of Management and Budget (OMB): Oral and Written Purchase Orders, OMB Control No. 2030–0007. Before submitting the ICR to OMB for review and approval, EPA is soliciting comments on specific aspects of the proposed information collection as described below.

DATES: Comments must be submitted on or before August 6, 1996.

ADDRESSES: Environmental Protection Agency Office of Acquisition Management (3802F) 401 M. Street S.W., Washington, D.C. 20460. Attention: Edward N. Chambers.

FOR FURTHER INFORMATION CONTACT: Edward N. Chambers. (202) 260–6028/ FAX: (202) 260–1203/ CHAMBERS.ED@EPAMAIL.EPA.GOV

SUPPLEMENTARY INFORMATION:

Affected entities: Entities potentially affected by this action are vendors responding to oral requests for quotations.

Title: Oral and Written Purchase Orders, OMB Control No. 2030–0007, expiration date 11–30–96.

Abstract: Vendors responding to an oral request for quotation will report item title, unit cost, delivery destination, delivery time, company name, small business status, address, phone number, and a point of contact. They will submit this information by telephone when an Agency need for their products or services arises. EPA will use this information to award a purchase order.

An agency may not conduct or sponsor, and a person is not required to respond to, a collection of information unless it displays a currently valid OMB control number. The OMB control numbers for EPA's regulations are listed in 40 CFR Part 9 and 48 CFR Chapter 15.

The EPA would like to solicit comments:

(i) to evaluate whether the proposed collection of information is necessary for the proper performance of the functions of the agency, including whether the information will have practical utility;

(ii) to evaluate the accuracy of the Agency's estimate of the burden of the proposed collection of information, including the validity of the methodology and assumptions used;

(iii) to enhance the quality, utility, and clarity of the information to be collected; and

(iv) to minimize the burden of the collection of information on those who are to respond, including through the use of appropriate automated electronic, mechanical, or other technological collection techniques or other forms of information technology, e.g., permitting electronic submission of responses.

Burden Statement: The annual burden for this collection on respondents is 3,823 hours. This represents an average of 15 minutes for each of the 15,292 oral purchase orders issued in fiscal year 1995. The total number of responses is estimated at 15,292 (1 response per order x 15,292 oral purchase orders). The annual cost of this collection for respondents is estimated at $54,134 ($3.54 per order×15,292 oral purchase orders).

Burden means the total time, effort, or financial resources expended by persons to generate, maintain, retain, or disclose or provide information to or for a Federal agency. This includes the time needed to review instructions; to develop, acquire, install, and utilize technology and systems for the purposes of collecting, validating, and verifying information, processing and maintaining information, and disclosing and providing information; to adjust the existing ways to comply with any previously applicable instructions and requirements; to train personnel to be able to respond to a collection of information; to search data sources; to complete and review the collection of information; and to transmit or otherwise disclose the information.

Dated: May 31, 1996.

Susan Kantrowitz,

Acting Director, Policy Training and Oversight Division.

[FR Doc. 96–14460 Filed 6–6–96; 8:45 am]

BILLING CODE 6560–50–P–M

[FRL–5513–9]

National Advisory Council for Environmental Policy and Technology; Notice of Charter Renewal

AGENCY: Environmental Protection Agency (EPA).

ACTION: Notice of charter renewal.

The Charter for the Environmental Protection Agency's (EPA) National Advisory Council for Environmental Policy and Technology (NACEPT) will be renewed for an additional two-year period, as a necessary committee which is in the public interest, in accordance with the provisions of the Federal Advisory Committee Act (FACA), 5 U.S.C. appl.2 section 9(c). The purpose of NACEPT is to provide advice and counsel to the Administrator of EPA on issues associated with environmental management and policy. It is determined that NACEPT is in the public interest in connection with the performance of duties imposed on the Agency by law.

Inquiries may be directed to Gordon Schisler, Designated Federal Official, NACEPT, U.S. EPA, Acting Director of the Office of Cooperative Environmental Management (1601), 401 M Street, S.W., Washington, D.C. 20460.

Dated: May 23, 1996.

Gordon Schisler,

Designated Federal Official.

[FR Doc. 96–14456 Filed 6–6–96; 8:45 am]

BILLING CODE 6560–50–M

[ER–FRL–5470–3]

Environmental Impact Statements and Regulations; Availability of EPA Comments

Availability of EPA comments prepared May 20, 1996 Through May 24, 1996 pursuant to the Environmental Review Process (ERP), under Section 309 of the Clean Air Act and Section 102(2)(c) of the National Environmental Policy Act as amended. Requests for copies of EPA comments can be directed to the Office of Federal Activities at (202) 564–7167.

An explanation of the ratings assigned to draft environmental impact statements (EISs) was published in FR dated April 05, 1996 (61 FR 15251).

Draft EISs

ERP No. D–BLM–G67002–NM Rating LO, Copper Flat Mining Project, Construction and Operation of New Ore Facilities, Hillsboro Mining District, Sierra County, NM.

SUMMARY: EPA had no objection to BLM's preferred alternative as described in the draft EIS.

ERP No. D–FHW–E40359–SC Rating EO2, Carolina Bays Parkway (better known as Grand Strand), Funding, NPDES Permit, COE Section 10 and 404 Permits, Horry and Georgetown Counties, SC.

SUMMARY: EPA expressed environmental objections to both proposed highway alternatives due to the severity of impacts to wetland and upland resources.

EPA requested that the final EIS include additional wetland avoidance methods and provide more information on upland resources. ERP No. D–GSA–E81036–GA Rating EC2, Savannah Federal Building—United States Courthouse, Site Selection and Construction of Annex within the existing Federal Building Courthouse, Savannah, GA.

SUMMARY: EPA expressed environmental concern regarding solid waste and economic impacts and requested that additional analysis of these issues be included in the FEIS. EPA also requested that information be provided on the adaptive reuse of the building.

ERP No. D–NOA–E91000–NC Rating LO, Black Sea Bass (Centropristis striata) Fishery Management Plan (FMP), Implementation, in the western Altantic Ocean, from Cape Hatteras, NC northward to the US-Canadian Border.

SUMMARY: EPA had no objections to the proposed action.

ERP No. D–NPS–K61142–CA Rating EC2, Manzanar National Historic Site (NHS), General Management Plan, Implementation, Inyo County, CA.

SUMMARY: EPA expressed environmental concerns and requested NPS to provide additional information on air quality modeling, emissions, and conformity, impacts to wetlands and groundwater resources, and an inventory of endangered species, along with potential impacts analysis.

ERP No. DR–NPS–L61196–AK Rating LO, Denali (South Slope) National Park and Preserve Development Concept Plan, Implementation, Additional Information, Mantanuska-Susitna Borough, AK.

SUMMARY: EPA had no objection to the action as proposed.

Final EISs

ERP No. F–DOE–L39052–OR, Columbia River System Operation Review (SOR), Multiple Use Management, Long-Term System Planning By Interested Parties Other than Management Agencies, Canadian Entitlement Allocation Agreement Renewal or Modification and Pacific NW Coordination Agreement Renewal or Renegotiation, OR.

SUMMARY: EPA continued to have concerns regarding water temperature, total dissolved gas levels the lack of baseline data and the need for additional monitoring.

ERP No. F–FAA–L51016–WA, Seattle—Tacoma (Sea-Tac) International Airport Master Plan Update for Development Actions, Funding, Airport Layout Plan Approval and COE Section 404 Permit, King County, WA.

SUMMARY: EPA continued to have concerns regarding noise and air issues. EPA's air quality comments will be sent in a subsequent letter, due to the extension of the air quality comment period by the FAA.

ERP No. F–FHW–E40325–NC, Winston-Salem Northern Beltway (Western Section), Construction, from US 158 Northward to US 52, Funding and COE Section 404 Permit, Forsyth County, NC.

SUMMARY: EPA continued to express concern regarding floodplain wildlife habitat impacts of the preferred alternative, since other alternatives have few impacts.

ERP No. F–UAF–K11063–CA, March Air Force Base, Disposal of Portions, NPDES and COE Section 404 Permits, Riverside County, CA.

SUMMARY: While most of EPA's prior issues have been resolved. EPA continued to express concern regarding possible air quality environmental justice impact.

Dated: June 04, 1996

William D. Dickerson,

Director, NEPA Compliance Division, Office of Federal Activities.

[FR Doc. 96–14436 Filed 6–6–96; 8:45 am]

BILLING CODE 6560–50–P

[ER–FRL–5470–2]

Environmental Impact Statements; Notice of Availability

RESPONSIBLE AGENCY: Office of Federal Activities, General Information (202) 564–7167 OR (202) 564–7153. Weekly receipt of Environmental Impact Statements Filed May 27, 1996 Through May 31, 1996 Pursuant to 40 CFR 1506.9.

EIS No. 960253, FINAL EIS, AFS, ID, Packsaddle Timber Sale and Road Construction Project, Implementation, Idaho Panhandle National Forests, Sandpoint Ranger District, Bonner County, ID, Due: July 08, 1996, Contact: Joni Urbanski (208) 263–5111.

EIS No. 960254, FINAL SUPPLEMENT, BLM, MT, Big Dry Land

and Resource Management Plan, Updated Information on Leaving the Calypso Trail Open or Closing the Trail to Motorized Vehicles, Implementation, Miles City District, MT, Due: July 08, 1996, Contact: James Beaver (406) 255–2918.

EIS No. 960255, DRAFT EIS, COE, DE, NJ, Broadkill Beach Erosion Study, Implemenation, Condition and Shore Protection, Delaware Bay Coastline, Delaware and New Jersery, Sussex County, DE and NJ, Due: July 22, 1996, Contact: Barbara Conlin (215) 656–6555.

EIS No. 960256, DRAFT SUPPLEMENT, VAD, OK, Oklahoma City Area National Cemetery Construction and Operation, Updated Information on a New Potential Site, Fort Sill, Comanche County, OK, Due: July 22, 1996, Contact: David Starkie (202) 565–4204.

EIS No. 960257, DRAFT SUPPLEMENT, GSA, WA, Pacific Highway Port of Entry (POE) Facility Expansion, Updated Information, Construction of WA–543 in Blaine, near the United States/Canada Border in Blaine, Whatcom County, WA, Due: July 22, 1996, Contact: Donna M. Meyer (206) 931–7675.

EIS No. 960258, FINAL EIS, NOA, ME, RI, NJ, CT, NY, Scup (Stenotomus Chrusops) Fishery Amendment, Fishery Management Plan (FMP), Implementation, Elimination or Prevention of Over Fishing in the Exclusive Economic Zone (EEZ), Approval and Permits, ME, CT, RI, NY and NJ, Due: July 08, 1996, Contact: Regina Spallone (508) 281–9221.

EIS No. 960259, DRAFT SUPPLEMENT, FTA, IL, St. Clair County Corridor Transit Improvements, Additional and Updated Information on the Metrolink Extension Project from East St. Louis to the Mid-America Airport, Funding, St. Clair County, IL, Due: July 22, 1996, Contact: Joni Roeseter (816) 523–0204.

EIS No. 960260, FINAL SUPPLEMENT EIS, NAS, International Space Station, Assembly and Operation, Space Station Freedom (SSF), Due: July 08, 1996, Contact: David F. Ruszryk (713) 244–7756.

EIS No. 960261, FINAL EIS, BLM, NV, Bootstrap/Capstone and Tara Open-Pit Gold Mine Project, Construction and Operation, Plan of Operataion Approval, Elko and Eureka Counties, NV, Due: July 08, 1996, Contact: Deb McFarlane (702) 753–0200.

Amended Notices

EIS No. 960224, DRAFT EIS, USN, Naval Spent Nuclear Fuel Container System Management, Loading, Handling and Dry Storage, Transportation and Storage, Handling and Transportation of certain Associated Radioactive Waste, Implementation, United States, Due: July 18, 1996, Contact: William Knoll (703) 602–8229. Published FR 06–07–96—Review Period Extended.

Dated: June 4, 1996.

William D. Dickerson,

Director, NEPA Compliance Division, Office of Federal Activities.

[FR Doc. 96–14437 Filed 6–6–96; 8:45 am]

BILLING CODE 6560–50–P

[OPPTS–00188; FRL–5376–9]

National Advisory Committee for Acute Exposure Guideline Levels for Hazardous Substances (NAC/AEGL)

AGENCY: Environmental Protection Agency (EPA).

ACTION: Notice of open meeting.

SUMMARY: The first meeting of the National Advisory Committee for Acute Exposure Guideline Levels for Hazardous Substances (NAC/AEGL) will be held on June 19–21, 1996, in Washington, DC.

DATES: The NAC/AEGL will meet on Wednesday, June 19, 1996, from 10 a.m. to 5 p.m.; Thursday, June 20, 1996, from 9 a.m. to 5 p.m.; Friday, June 21, 1996, from 9 a.m. to 2 p.m.

ADDRESSES: The meeting will be held at the Green Room on the third floor of the Ariel Rios Building, 1200 Pennsylvania Avenue NW., Washington DC.

FOR FURTHER INFORMATION CONTACT: Paul Tobin, Office of Prevention, Pesticides and Toxic Substances (7406), 401 M St., SW., Washington, DC 20460, (202) 260–1736, e-mail: tobin.paul@epamail.epa.gov.

SUPPLEMENTARY INFORMATION: In the Federal Register of October 31, 1995, (60 FR 55376) (FRL–4987–3), EPA's Office of Prevention, Pesticides, and Toxic Substances (OPPTS) gave notice of the establishment of the NAC/AEGL. It described its membership composition, and stated its purpose to be ''the efficient and effective development of AEGLs and the preparation of supplementary qualitative information on the hazardous substances for federal, state, and local agencies and organizations in the private sector concerned with emergency planning, prevention and response.'' Chemicals to be addressed by the Committee at the first meeting are ammonia, fluorine, hydrazine, and methyl mercaptan. Information on the availability of supporting documents for these chemicals may be obtained from the Designated Federal Officer (DFO) (see FOR FURTHER INFORMATION CONTACT).

The meeting will be open to the public. Oral statements will be limited to ten minutes. Since space is limited, those wishing to attend the meetings as observers should contact the NAC/AEGL DFO, Dr. Paul S. Tobin, at the phone number listed under FOR FURTHER INFORMATION CONTACT.

Any person who wishes to file a written statement can do so before or after an NAC/AEGL meeting. Written statements received prior to the meetings will be distributed to the members before final discussions are completed. Statements received after the meetings will become part of the permanent meeting file and will be forwarded to the NAC/AEGL members for their information.

List of Subjects

Environmental protection.

Dated: May 31, 1996.

Susan H. Wayland,

Acting Assistant Administrator for Prevention, Pesticides and Toxic Substances.

[FR Doc. 96–14453 Filed 6–5–96; 11:07 am]

BILLING CODE 6560–50–F

[FRL–5514–1]

National Advisory Council for Environmental Policy and Technology Information Impacts Committee; Public Meeting

AGENCY: Environmental Protection Agency (EPA).

ACTION: Notice of Public Meeting.

SUMMARY: Under the Federal Advisory Committee Act, PL 92463, EPA gives notice of a two-day meeting of the National Advisory Council for Environmental Policy and Technology (NACEPT) Information Impacts Committee (IIC). NACEPT provides advice and recommendations to the Administrator of EPA on a broad range of environmental policy issues. The IIC has been asked to review information requirements, and provide recommendations on how to effectively position information resources to support new, comprehensive and long-term Agency initiatives. This meeting is being held to provide the IIC with State, Local Government, Community, and EPA Regional IRM perspectives.

DATES: The two-day public meeting will be held on Thursday, July 11, 1996 from 9:00 am to 5:00 pm and on Friday, July 12, 1996 from 9:00 am to 3:00 pm. The meeting will be held at the EPA Region

VIII Conference Center, 999 18th Street, Denver, CO, 80202–2466.

ADDRESSES: Materials, or written comments, may be transmitted to the Committee through Joe Sierra, Designated Federal Official, NACEPT/IIC, U.S. EPA, Office of Cooperative Environmental Management (1601–F), 401 M Street, S.W., Washington, D.C. 20460.

FOR FURTHER INFORMATION CONTACT: Joseph Sierra, Designated Federal Official for the Information Impacts Committee at 202–260–6839.

Dated: May 28, 1996.

Joseph A. Sierra,

Designated Federal Official.

[FR Doc. 96–14457 Filed 6–6–96; 8:45 am]

BILLING CODE 6560–50–M

[FRL–5513–8]

Community-Based Environmental Protection Committee of the National Advisory Council for Environmental Policy and Technology; Public Meeting

AGENCY: Environmental Protection Agency (EPA).

ACTION: Notice of public meeting.

SUMMARY: Under the Federal Advisory Committee Act, Pub. L. 92463, EPA gives notice of a two-day meeting of the Community-Based Environmental Protection Committee of the National Advisory Council for Environmental Policy and Technology (NACEPT). NACEPT provides advice and recommendations to the Administrator of EPA on a broad range of environmental policy issues, and the Community-Based Environmental Protection Committee was formed to identify opportunities for harmonizing environmental policy, economic activity, and ecosystem management.

The meeting is being held to discuss recommendations the Committee plans to submit to EPA. Scheduling constraints preclude oral comments from the public during the meeting. Written comments can be submitted by mail, and will be transmitted to Committee members for consideration.

DATES: The public meeting will be held on Wednesday, July 17, and Thursday, July 18, 1996, at the U.S. EPA Chesapeake Bay Program Office, 410 Severn Avenue, Annapolis, Maryland. On Wednesday, July 17, the Committee will meet from 9:00 a.m. to 5:00 p.m., and on Thursday, July 18, the Committee will meet from 8:30 a.m. to 4:00 p.m.

ADDRESSES: Written comments should be sent to: Mark Joyce, Office of Cooperative Environmental Management, U.S. EPA (1601F), 401 M Street SW, Washington, D.C. 20460.

FOR FURTHER INFORMATION CONTACT: Mark Joyce, Designated Federal Official, Direct line (202) 260–6889, Secretary's line (202) 260–9744.

Dated: May 23, 1996.

Mark Joyce,

Designated Federal Official.

[FR Doc. 96–14462 Filed 6–06–96; 8:45 am]

BILLING CODE 6560–50–P

[OPP–30112; FRL–5373–8]

Chlorothalonil; Request for Exception to Worker Protection Standard's Prohibition of Early Entry Into Pesticide-Treated Areas to Harvest Muskmelons by Hand

AGENCY: Environmental Protection Agency (EPA).

ACTION: Announcement of receipt of petition for an exception; request for comment.

SUMMARY: EPA's Worker Protection Standard (WPS) permits the Agency to grant exceptions to restrictions on worker entry into pesticide-treated areas. This permission is found in 40 CFR 170.112(e). The State of Indiana has petitioned the Agency to allow workers to enter into muskmelon fields that have been treated with chlorothalonil, to engage in hand harvesting before the 48-hour restricted entry interval (REI) has expired. An REI is the amount of time that must expire after a pesticide application before workers are allowed to enter the treated area. The request covers the period of June 15 through August 30, 1996, the general range of time when muskmelons are harvested. This Notice acknowledges receipt of Indiana's petition and invites comments from the public on the substance of the petition.

DATES: Comments, data, or evidence should be submitted on or before July 8, 1996.

ADDRESSES: The Agency invites any interested person to submit written comments identified by docket number ''OPP–30112'' to: By mail: Public Response and Program Resources Branch, Field Operations Division (7506C), Environmental Protection Agency, 401 M St., SW., Washington, DC 20460. In person, bring comments to: Rm. 1132, Crystal Mall #2, 1921 Jefferson Davis Highway, Arlington, VA 22202.

Comments and data may also be submitted electronically by sending electronic mail (e-mail) to: opp-docket@epamail.epa.gov. Electronic comments must be submitted as an ASCII file avoiding the use of special characters and any form of encryption. Comments and data will also be accepted on disks in WordPerfect 5.1 file format or ASCII file format. All comments and data in electronic form must be identified by the docket number ''OPP–30112.'' No Confidential Business Information (CBI) should be submitted through e-mail. Electronic comments on this document may be filed online at many Federal Depository Libraries.

Information submitted as a comment concerning this document may be claimed confidential by marking any part or all of that information as CBI. Information so marked will not be disclosed except in accordance with procedures set forth in 40 CFR part 2. A copy of the comment that does not contain CBI must be submitted for inclusion in the public record. Information not marked confidential may be disclosed publicly by EPA without prior notice. All written comments will be available for public inspection in Rm. 1132 at the Virginia address given above from 8 a.m. to 4:30 p.m., Monday through Friday, excluding legal holidays.

FOR FURTHER INFORMATION CONTACT: Joshua First, Field Operations Division, Office of Pesticide Programs (7506C), Environmental Protection Agency, 401 M St., SW., Washington, DC 20460. Office location, telephone number, and e-mail address: Rm. 1121, 1921 Jefferson Davis Highway, Crystal Mall #2, Arlington, VA, (703-305-7437), e-mail: first.joshua@epamail.epa gov.

SUPPLEMENTARY INFORMATION:

I. Background

A. Statutory Authority

This Notice is issued under the authority of 40 CFR 170.112, authorized by section 25(a) of the Federal Insecticide, Fungicide, and Rodenticide Act (FIFRA), 7 U.S.C. 136w(a). Under FIFRA, EPA is authorized to mitigate unreasonable adverse effects that may result from exposure to pesticides, taking into account risks of pesticide exposure to human health and the environment and the benefits of pesticide use to society and the economy.

B. The Worker Protection Standard

Introduced in 1974, the Worker Protection Standard (WPS) is intended to reduce the risk of pesticide poisonings and injuries among agricultural workers who are exposed to pesticide residues, and to reduce the risk of pesticide poisonings and injuries

among pesticide handlers who may face more hazardous levels of exposure. Updated in 1992, the WPS scope now includes workers performing hand labor operations in fields treated with pesticides, workers in or on farms, forests, nurseries, and greenhouses, and pesticide handlers who mix, load, apply, or otherwise handle pesticides. The WPS contains requirements for pesticide safety training, notification of pesticide applications, use of personal protective equipment (PPE), restricted entry intervals following pesticide application, decontamination supplies, and emergency medical assistance.

C. Early Entry Exceptions

In general, § 170.112 of the WPS prohibits agricultural workers from entering a pesticide-treated area during a restricted entry interval (REI). REIs are specified on the pesticide product label and typically range from 12 to 72 hours. Product-specific longer REIs have been set for a few pesticides.

The WPS contains the following exceptions to the general prohibition against worker entry into treated areas during the REI:

(1) Entry resulting in no contact with treated surfaces.

(2) Entry allowing short-term tasks (less than 1 hour) to be performed by workers wearing PPE and meeting other conditions.

(3) Entry to perform tasks associated with agricultural emergencies.

Under § 170.112(e) of the WPS, EPA may establish additional exceptions to the Standard's provision of prohibiting early entry to perform routine hand labor tasks. Before implementing such changes, however, EPA is required to provide a 30-day public comment period. EPA will grant or deny a request for an exception based on a risk-benefit analysis. This analysis is required by 40 CFR 170.112(e)(3), and takes into account both the added risks and the benefits from allowing early entry to perform hand labor tasks.

Under 40 CFR 170.112(b) and (c), workers engaging in early entry work are not permitted to engage in hand labor, which results in substantial contact with pesticide-treated surfaces, and under § 170.112(d) and (e), workers are explicitly allowed to engage in hand labor. The WPS defines hand labor as any agricultural activity performed by hand or with hand tools that causes a worker to have substantial contact with treated surfaces (such as plants or soil) that may contain pesticide residues.

On June 10, 1994 (59 FR 30265), EPA granted an exception which allows, under specific conditions, early entry into pesticide-treated areas in greenhouses to harvest roses by hand cutting. In the Federal Register of May 3, 1995 (60 FR 21953) (FRL–4950–9), two additional exceptions were granted which allow early-entry to perform irrigation and limited contact tasks under specified conditions.

On September 27, 1995 (60 FR 49841) (FRL–4974–4), EPA denied the State of Delaware an exception to the 48-hour REI for chlorothalonil that had been submitted in a petition. The petition had requested an exception for the purpose of allowing workers early entry (a 12–hour REI) into treated areas to hand harvest cantaloupes and squash. An additional 10 States submitted similar requests during the 30-day public comment period after EPA published notice of its receipt of Delaware's petition, and EPA denied those requests as well.

D. Basic Information about Chlorothalonil

Chlorothalonil is a wettable granular fungicide used to control powdery mildew, downey mildew, and Alternaria leaf blight diseases, among others. Under the WPS, the REI has been set at 48 hours, an increase from 12 hours. The pre-harvest interval (PHI) for melons and squash is 0 days. The PHI is the period that must elapse, in days, from the last day of application to the first day that a crop can be harvested. Chlorothalonil is in acute Toxicity Category I for primary eye irritation and has been classified as a probable human carcinogen (Category B_2). Chlorothalonil poses risks of severe eye irritation and delayed health effects (kidney effects). Currently EPA is working on a Reregistration Eligibility Document (RED) for chlorothalonil. A RED is a document that combines all scientific and economic information about a pesticide and which is used for determining whether or not a pesticide should be reregistered. The chlorothalonil RED is scheduled for completion this year.

II. Summary of Indiana's Petition

The State of Indiana has petitioned the Agency under § 170.112(e) to allow early entry by workers into chlorothalonil-treated muskmelon fields to perform hand labor harvesting immediately after application of the fungicide. The current REI for chlorothalonil is 48 hours. Indiana's petition states that muskmelon growers will suffer substantial economic losses if they cannot harvest their crop on a daily basis. The time period for the exception requested is from June 15 through August 30, 1996.

A. Need for Early Entry

According to the request, Indiana-grown muskmelons are under strong disease pressure from Alternaria leaf blight, anthracnose, bacterial wilt, gummy stem blight, and powdery mildew. According to Indiana, if unchecked, these diseases can destroy the crop and result in serious reductions in muskmelon yield and quality.

Indiana states that muskmelons ripen quickly, and must therefore be harvested daily to avoid the fruit becoming over-ripe. Indiana contends that considerable amounts of fruit could be damaged or lost during the 48-hour REI, and even during a 24-hour REI, due to the inability to harvest mature crops daily. Indiana states that over-ripe muskmelons are not harvested; their connection to the vine is cut; and they are simply left in the field. Moreover, Indiana contends that if left on their vines, mature (over-ripe) muskmelons act as ''suckers,'' depriving less mature melons on the vine of nutrients necessary for their growth. Indiana estimated that a 7 percent crop loss would result from over-ripe fruit being left on the vine for 48 hours, and that a 2 percent loss would result from a 24-hour delay of harvest. It is also claimed that these over-ripe melons interfere with the production of female flowers, which are necessary for producing new fruit.

Indiana said that additional labor costs may be incurred to remove over-ripe fruit, posing a second set of costs to growers beyond costs associated with direct losses in sales.

Indiana states that fungicides applied after the first melon harvest result in greater muskmelon yields and a longer production period of fruit graded as United States Department of Agriculture (USDA) #1 quality. Powdery mildew is controlled primarily with ''timely applications'' of systemic fungicides, such as triadimefon and benomyl. Bacterial wilt is controlled through managing cucumber beetle populations, which spread the disease. Alternaria leaf blight, anthracnose, and gummy stem blight must be controlled with repeated applications of fungicides. Indiana says that, of the available appropriate fungicides for these three diseases, only chlorothalonil can be used during harvest, because muskmelons are harvested daily and chlorothalonil has a 0-day PHI. Indiana states that cultural controls for Alternaria leaf blight are not readily available and are not very effective in any case. Where powdery mildew is a problem, chlorothalonil is usually applied as necessary.

The alternative to chlorothalonil on muskmelons is mancozeb, which has a PHI of 5 days and is therefore not considered to be a practical alternative during the harvest. Indiana's petition implies that rescheduling chlorothalonil applications during the conventional 7-day spray schedule would not be practical because regardless of how a grower reschedules applications, there would be a 48-hour REI following a spray application; weather and crop maturity would most likely require harvest during that time.

According to Indiana, the average melon field size is 20 to 40 acres. Large fields are 250 acres. Other States have previously said that two to five workers are required to harvest for 1 hour per field, and that workers would harvest several fields over an 8-hour day. Machine harvesting of cantaloupe or squash is not possible. The State of Indiana says that it is open to suggestions from the Agency for any means to mitigate eye hazards to harvest crews posed by chlorothalonil. Indiana does not believe that workers should be required to wear any additional PPE, because EPA has stated that it believes that workers will not wear it (because of heat stress).

B. Proposed Terms of Exception

The State of Indiana has proposed the following terms:

1. Harvesting would be performed immediately after application.

2. All Indiana muskmelon growers would be required to use the MELCAST disease warning system (described below), and only apply chlorothalonil according to MELCAST times of predicted need. Indiana states that the MELCAST system is part of an integrated pest management program that results in two to four fewer annual chlorothalonil applications than the conventional 7-day program.

3. Limitations on current use patterns (and thereby lowering potential risk) by reducing the application rate and reducing the number of applications. The maximum chlorothalonil application rate would be 0.78 pounds of active ingredient per acre (lbs ai/acre), as opposed to the maximum rate of 1.5 lbs ai/acre. This lower rate would begin 2 days prior to the beginning of the melon harvest and continuing through the harvest.

4. Growers would be subject to unannounced inspections by the Office of Indiana State Chemist to ensure compliance, especially with the lower application rate of 0.78 pounds of active ingredient.

MELCAST is a computerized, weather-based disease advisory system that helps growers determine when the most appropriate times are for applying only essential fungicides. The Purdue Cooperative Extension Service has shown that using MELCAST will result in two to four fewer fungicide applications without increasing risk of crop losses. MELCAST can be used with Alternaria leaf blight, anthracnose, and gummy stem blight. It is assumed that the State of Indiana believes that the costs of these measures are less than the expected costs associated with crop losses without the exception being granted.

C. Economic Impacts

The State of Indiana has claimed that a significant economic loss may occur if the 48–hour REI remains in effect. Indiana has said that the daily harvest of muskmelons is essential to maximize crop production. Indiana projects that, with a 0-day REI, a muskmelon crop that yields 4,500 melons per acre over a 4-week harvest period (picked every day) results in a net return of $2,000 per day. With a 24-hour REI, Indiana calculates that the net return will be $1,440 per acre, an income reduction of 28 percent. With the current 48-hour REI, Indiana has projected a net return of $810 per acre, a 59 percent reduction from the best-case scenario of $2,000 per acre. Indiana states that the vast majority of Indiana muskmelon growers derive their incomes from farms that are 40 acres or less. For these farmers, whose incomes are claimed to be between $30,000 and $40,000, a 28 percent or 59 percent reduction in income could seriously affect their ability to make a living from growing muskmelons.

The following are the most significant points that EPA needs to address before an economic analysis can be completed. First, the applicant did not estimate the loss of fruit to disease if chlorothalonil is not used at all. Such an estimate would also include the reduced costs of not using chlorothalonil. Because the applicant has projected the costs of adhering to the 48–hour REI to be quite high, it is possible that not using chlorothalonil at all could be preferable in some situations.

Second, it is unclear to EPA how cutting over-ripe muskmelons (''sucker fruit'') from fruit-producing vines is considered an additional labor cost. EPA believes that it is labor that would have occurred in any case, and that picking fewer melons actually requires less labor. If the activity is claimed as an additional cost resulting from unproductive labor, the applicant has not clarified or explained that. Moreover, the applicant has not explained how a delay in harvest of 1 day will result in all of the fruit that would have been harvested being over-ripe; nor has the applicant explained how over-ripe melons are automatically economically valueless.

Third, the applicant did not consider the relative savings in reduced usage of chlorothalonil due to implementing MELCAST, and assumed one application per week in projecting yield reductions. The use of the MELCAST system reportedly should reduce chlorothalonil applications to be, on average, less frequent than once every 7 days.

Finally, better explanation and documentation of the basis and methodology for estimating the stated quantitative yield loss estimates of 2 percent and 7 percent for the 24–hour REI and the 48-hour REI are needed.

D. Potential Risks

Prior to the introduction of WPS-based interim REIs, chlorothalonil's REI was 12 hours; its current REI is 48 hours. Based on new data received through its reregistration program, EPA is now reviewing the length of chlorothalonil's REI. At the current standard application rate (for muskmelons) of 1.5 lbs ai/acre, chlorothalonil appears to pose risks to most workers, risks that could be mitigated by a longer REI.

EPA has conducted several preliminary qualitative assessments, based on different assumptions, to evaluate the potential carcinogenic and toxicity risks from exposure to chlorothalonil. When chlorothalonil treatment begins before the harvest season at 1.5 lbs ai/acre, and then drops in rate to 0.78 lbs ai/acre during the harvest season (as Indiana is proposing), the risk is substantially reduced from the current treatment schedule. The REI for this application schedule would be 24 hours. However, because chlorothalonil has a half-life of 3.5 days, the residue remaining after the application at the rate of 1.5 lbs ai/acre, coupled with the subsequent rate of 0.78 lb ai/acre, will still leave residues that pose risks of some concern to workers, if they entered the treated site immediately after application.

It appears that still lower potential risk could be attained by reducing the chlorothalonil application to 0.78 lb ai/acre for the entire growing and harvesting season. Lowest risk seems to be posed by use of alternative fungicides prior to harvest with chlorothalonil application at the reduced rate starting just prior to the harvest period in order to accommodate the PHI of the alternatives.

EPA's assessment of worker risk from re-entry may be affected by additional information about foliar dislodgable residue, especially about chlorothalonil residue levels between applications, and other information.

III. Comments and Information Solicited

The Agency is interested in receiving comments on this proposed exception. In particular, the Agency welcomes comments supported by data or additional information about muskmelons, about the potential risks associated with granting this exception request, about cultural practices, and about the potential economic impacts.

This would include evidence demonstrating whether or not the risks to workers would be acceptable given Indiana's proposed terms, and an REI of 0 hours. It would also include evidence about whether or not REIs of 4, 12, or 24 hours are appropriate given varying application schedules and the substitution of alternative fungicides during the growing season. An REI of 4 hours has not been proposed, and EPA maintains concerns about the potential worker risks associated with a 4-hour REI, but EPA nevertheless is soliciting comments on it. An alternative but similar application schedule using another fungicide (mancozeb) during the growing season may warrant an REI of 12 hours, and an application schedule similar to that proposed by Indiana might result in an REI of 24 hours.

The Agency is also interested in evidence about whether or not the use of PPE, engineering controls, or any additional decontamination procedures or safety training would be useful should the exception be granted. The Agency is interested in obtaining data on how heat stress from PPE can be mitigated, and if there are any reports of poisoning incidents involving harvesters being exposed to chlorothalonil.

The Agency also would like information about cultural practices and economic impacts, such as an appropriate time limit on activities performed during the REI; this would include information about the affect the WPS had on the 1995 melon season. Comments on feasible alternative fungicides or integrated pest management practices that would make early entry for hand harvesting unnecessary, and their associated costs, are also solicited. The Agency welcomes any additional information concerning the economic impact on Indiana's muskmelon industry (such as crop yield and/or price) resulting from continuing to prohibit hand harvesting during chlorothalonil's 48-hour REI on muskmelons. Also solicited is additional information on the average life of muskmelon fruit, uses for over-ripe fruit, uses for canned muskmelon fruit and juice, and the stages of maturity that are required for different markets.

IV. Public Record

Interested persons are invited to submit written comments on this action. Comments must bear a notation indicating the docket control number [OPP–30112].

A record has been established for this action under docket number ''OPP–30112'' (including comments and data submitted electronically as described below). A public version of this record, including printed, paper versions of electronic comments, which does not include any information claimed as CBI, is available for inspection from 8 a.m. to 4:30 p.m., Monday through Friday, excluding legal holidays. The public record is located in Rm. 1132 of the Public Response and Program Resources Branch, Field Operations Division (7506C), Office of Pesticide Programs, Environmental Protection Agency, Crystal Mall #2, 1921 Jefferson Davis Highway, Arlington, VA.

Electronic comments can be sent directly to EPA at:

opp-docket@epamail.epa.gov

Electronic comments must be submitted as an ASCII file avoiding the use of special characters and any form of encryption.

The official record for the proposal as well as the public version, as described above will be kept in paper form. Accordingly, EPA will transfer all comments received electronically into printed, paper form as they are received and will place the paper copies in the official record which will also include all comments submitted directly in writing. The official rulemaking record is the paper record maintained at the address in ''ADDRESSES'' at the beginning of this document.

List of Subjects

Environmental protection, Occupational safety and health, Pesticides and Pests.

Dated: May 31, 1996.

Lynn R. Goldman,

Assistant Administrator for Prevention, Pesticides and Toxic Substances.

[FR Doc. 96–14449 Filed 6–06–96; 8:45 am]

BILLING CODE 6560–50–F

[FRL–5516–3]

Strategic Plan for the Office of Research and Development

AGENCY: Environmental Protection Agency.

ACTION: Notice of Availability.

SUMMARY: This notice announces the availability of the Strategic Plan for the Office of Research and Development (EPA–600/R–96/059), prepared by the U.S. Environmental Protection Agency's (EPA) Office of Research and Development (ORD). This document describes the process and criteria for selecting ORD's high priority research and defines the foundation for ORD's management and budget planning process.

DATES: The Strategic Plan for the Office of Research and Development will be available to the public on or about June 7, 1996. Interested parties can access the Executive Summary of the Document via the Internet on the ORD Home Page (http://www.epa.gov/ORD) on or about June 3, 1996. In addition, the entire document will be available on the Internet on or about June 7, 1996.

ADDRESSES: The document is available for inspection at the EPA Headquarters Library, Waterside Mall, 401 M Street, SW., Washington, DC. EPA Library hours are 10:00 a.m. to 2:00 p.m., Monday through Friday, excluding holidays. On or about June 7, 1996, interested parties can obtain a single copy of the Strategic Plan by contacting: ORD Publications Office, Technology Transfer Division, National Risk Management Research Lab, U.S. Environmental Protection Agency, 26 W. Martin Luther King Drive, Cincinnati, OH 45268; Telephone: (513–569–7566.) Please provide your name and mailing address, and request the document by the title and EPA Document No. (EPA–600/R–96/059). A limited number of paper copies will be available from this source, and requests will be filled on a first come-first served basis. After the supply is exhausted, copies of the Strategic Plan can be purchased from the National Technical Information Service (NTIS) by calling (703) 487–4650 or sending a facsimile to (703) 321–8547. The NTIS order number for the Strategic Plan is (PB96–175385.)

FOR FURTHER INFORMATION CONTACT: Sherry Hawkins Office of Research and Science Integration, (8104), U.S. Environmental Protection Agency, Washington, D.C. 20460. Telephone (202) 260–5593; Facsimile (202–260–0106.)

SUPPLEMENTARY INFORMATION: In recent years, many important groups,

including EPA's Science Advisory Board and blue ribbon panels convened by the National Academy of Public Administration and the National Research Council, have made many excellent suggestions for improving science at EPA. ORD's Strategic Plan incorporates and builds on these ideas to provide the course for strong, credible science at EPA into the next century.

This plan is the culmination of a number of strategic changes to institute a more effective, risk-based research program at ORD. For example, ORD reorganized its nationwide system of laboratories to conform to the fundamental components of widely used risk assessment and risk management processes. With this Strategic Plan, ORD has instituted a new system for determining research priorities based on risk assessment and risk management principles. This system will be used to sharpen the focus of research by directing resources where they will contribute most effectively to understanding and solving environmental problems, while supporting EPA in fulfilling its mandates. The Plan served as the blueprint for the FY '97 budget planning process and will provide the basis for building the FY '98 budget.

The goal of ORD's research program is to assure that EPA's environmental decisions are based on high quality science, and that science is provided in a timely and useful format to users. The Plan also lays the foundation for more clearly defining the next generation of environmental problems and the research to address those problems.

Dated: May 28, 1996.

J.K. Alexander,

Deputy Assistant Administrator, Office of Research and Development.

[FR Doc. 96–14458 Filed 6–6–96; 8:45 am]

BILLING CODE 6560–50–P

FEDERAL COMMUNICATIONS COMMISSION

[Report No. 1]

Petition for Reconsideration of Action in Commission Proceeding

May 31, 1996.

A petition for partial reconsideration has been filed with respect to the Commission's Memorandum Opinion and Order listed below. The full text of this document is available for viewing and copying in Room 610, 1919 M Street, NW., Washington, DC, by contacting Donna Viert ((202) 418–1725). In addition, copies may be purchased from the Commission's copy contractor, ITS, Inc. ((202) 857–3800). In accordance with section 1.45(b) of the Commission's Rules (47 CFR 1.4(b)(1)) oppositions to this petition for partial reconsideration must be filed June 24, 1996. Replies to an opposition must be filed within 10 days after the time for filing oppositions has expired.

Subject: Settlements in Comparative Broadcast Proceedings–Emergency Request for Immediate Declaratory Ruling. FCC 96–179 released April 26, 1996.

Filed By: Gene A. Bechtel, Bechtel & Cole, Chartered on May 28, 1996.

Action by the General Counsel.

Federal Communications Commission

LaVera F. Marshall,

Acting Secretary.

[FR Doc. 96–14320 Filed 6–6–96; 8:45 am]

BILLING CODE 6712–01–M

FEDERAL DEPOSIT INSURANCE CORPORATION

Notice of Agency Meeting; Sunshine Act Meeting

Pursuant to the provisions of the ''Government in the Sunshine Act'' (5 U.S.C. 552b), notice is hereby given that at 10:00 a.m. on Tuesday, June 4, 1996, the Board of Directors of the Federal Deposit Insurance Corporation met in closed session to consider matters relating to the Corporation's supervisory activities.

In calling the meeting, the Board determined, on motion of Vice Chairman Andrew C. Hove, Jr., seconded by Director Joseph H. Neely (Appointive), concurred in by Mr. John F. Downey, acting in the place and stead of Director Jonathan L. Fiechter (Acting Director, Office of Thrift Supervision), Ms. Julie Williams, acting in the place and stead of Director Eugene A. Ludwig (Comptroller of the Currency), and Chairman Ricki Helfer, that Corporation business required its consideration of the matters on less than seven days' notice to the public; that no earlier notice of the meeting was practicable; that the public interest did not require consideration of the matters in a meeting open to public observation; and that the matters could be considered in a closed meeting by authority of subsections (c)(4), (c)(6), (c)(8), and (c)(9)(A)(ii) of the ''Government in the Sunshine Act'' (5 U.S.C. 552b (c)(4), (c)(6), (c)(8), and (c)(9)(A)(ii).

The meeting was held in the Board Room of the FDIC Building located at 550—17th Street, N.W., Washington, D.C.

Dated: June 4, 1996.

Federal Deposit Insurance Corporation

Robert E. Feldman,

Deputy Executive Secretary.

[FR Doc. 96–14594 Filed 6–5–96; 8:45 am]

BILLING CODE 6714–01–M

FEDERAL MARITIME COMMISSION

Performance Review Board; Notice of Names of Members

AGENCY: Federal Maritime Commission.

ACTION: Notice.

SUMMARY: Notice is hereby given of the names of the members of the Performance Review Board.

FOR FURTHER INFORMATION CONTACT: William J. Herron, Jr., Director of Personnel, Federal Maritime Commission, 800 North Capitol Street, Washington, DC 20573.

SUPPLEMENTARY INFORMATION: Sec. 4314(c) (1) through (5) of title 5, U.S.C., requires each agency to establish, in accordance with regulations prescribed by the Office of Personnel Management, one or more performance review boards. The board shall review and evaluate the initial appraisal of a senior executive's performance by the supervisor, along with any recommendations to the appoint authority relative to the performance of the senior executive.

Harold J. Creel, Jr.,

Chairman.

The Members of the Performance Review Board Are:

1. Ming Chen Hsu, Commissioner
2. Delmond J.H. Won, Commissioner
3. Joe Scroggins, Jr., Commissioner
4. Norman D. Kline, Chief Administrative Law Judge
5. Frederick M. Dolan, Jr., Administrative Law Judge
6. Charles E. Morgan, Administrative Law Judge
7. Robert D. Bourgoin, General Counsel
8. Joseph C. Polking, Secretary
9. Edward P. Walsh, Managing Director
10. Bruce A. Dombrowski, Deputy Managing Director
11. Vern W. Hill, Director, Bureau of Enforcement
12. Sandra L. Kusumoto, Director, Bureau of Administration
13. Austin L. Schmitt, Director, Bureau of Economics and Agreement Analysis
14. Norman W. Littlejohn, Deputy Director, Bureau of Enforcement

15. Bryant L. VanBrakle, Director, Bureau of Tariffs, Certification and Licensing

[FR Doc. 96–14353 Filed 6–6–96; 8:45 am]

BILLING CODE 6730–01–M

FEDERAL RESERVE SYSTEM

Formations of, Acquisitions by, and Mergers of Bank Holding Companies

The companies listed in this notice have applied to the Board for approval, pursuant to the Bank Holding Company Act of 1956 (12 U.S.C. 1841 *et seq.*) (BHC Act), Regulation Y (12 CFR part 225), and all other applicable statutes and regulations to become a bank holding company and/or to acquire the assets or the ownership of, control of, or the power to vote shares of a bank or bank holding company and all of the banks and nonbanking companies owned by the bank holding company, including the companies listed below.

The applications listed below, as well as other related filings required by the Board, are available for immediate inspection at the Federal Reserve Bank indicated. Once the application has been accepted for processing, it will also be available for inspection at the offices of the Board of Governors. Interested persons may express their views in writing on the standards enumerated in the BHC Act (12 U.S.C. 1842(c)). If the proposal also involves the acquisition of a nonbanking company, the review also includes whether the acquisition of the nonbanking company complies with the standards in section 4 of the BHC Act, including whether the acquisition of the nonbanking company can ''reasonably be expected to produce benefits to the public, such as greater convenience, increased competition, or gains in efficiency, that outweigh possible adverse effects, such as undue concentration of resources, decreased or unfair competition, conflicts of interests, or unsound banking practices'' (12 U.S.C. 1843). Any request for a hearing must be accompanied by a statement of the reasons a written presentation would not suffice in lieu of a hearing, identifying specifically any questions of fact that are in dispute, summarizing the evidence that would be presented at a hearing, and indicating how the party commenting would be aggrieved by approval of the proposal. Unless otherwise noted, nonbanking activities will be conducted throughout the United States.

Unless otherwise noted, comments regarding each of these applications must be received at the Reserve Bank indicated or the offices of the Board of Governors not later than July 1, 1996.

A. Federal Reserve Bank of Atlanta (Zane R. Kelley, Vice President) 104 Marietta Street, N.W., Atlanta, Georgia 30303:

1. Hibernia Corporation, New Orleans, Louisiana; to acquire 100 percent of the voting shares of St. Bernard Bank & Trust Company, Arabi, Louisiana.

2. Hibernia Corporation, New Orleans, Louisiana, to merge with CM Bank Holding Company, Lake Charles, Louisiana, and thereby indirectly acquire The Calcasieu Marine National Bank of Lake Charles, Lake Charles, Louisiana.

B. Federal Reserve Bank of Dallas (Genie D. Short, Vice President) 2200 North Pearl Street, Dallas, Texas 75201-2272:

1. Freeman Bancstock Investments and Inwood Bancshares, Inc., both of Dallas, Texas; to acquire 100 percent of the voting shares of U B & T Financial Corporation, Dallas, Texas, and U B & T Delaware Financial Corporation, Dover, Delaware, and thereby indirectly acquire United Bank & Trust, N.A., Dallas, Texas.

Board of Governors of the Federal Reserve System, June 3, 1996.

Jennifer J. Johnson,

Deputy Secretary of the Board.

[FR Doc. 96–14373 Filed 6–6–96; 8:45 am]

BILLING CODE 6210–01–F

Notice of Proposals to Engage in Permissible Nonbanking Activities or to Acquire Companies that are Engaged in Permissible Nonbanking Activities

The companies listed in this notice have given notice under section 4 of the Bank Holding Company Act (12 U.S.C. 1843) (BHC Act) and Regulation Y, (12 CFR part 225) to engage *de novo*, or to acquire or control voting securities or assets of a company that engages either directly or through a subsidiary or other company, in a nonbanking activity that is listed in § 225.25 of Regulation Y (12 CFR 225.25) or that the Board has determined by Order to be closely related to banking and permissible for bank holding companies. Unless otherwise noted, these activities will be conducted throughout the United States.

Each notice is available for inspection at the Federal Reserve Bank indicated. Once the notice has been accepted for processing, it will also be available for inspection at the offices of the Board of Governors. Interested persons may express their views in writing on the question whether the proposal complies with the standards of section 4 of the BHC Act, including whether consummation of the proposal can ''reasonably be expected to produce benefits to the public, such as greater convenience, increased competition, or gains in efficiency, that outweigh possible adverse effects, such as undue concentration of resources, decreased or unfair competition, conflicts of interests, or unsound banking practices'' (12 U.S.C. 1843). Any request for a hearing on this question must be accompanied by a statement of the reasons a written presentation would not suffice in lieu of a hearing, identifying specifically any questions of fact that are in dispute, summarizing the evidence that would be presented at a hearing, and indicating how the party commenting would be aggrieved by approval of the proposal.

Unless otherwise noted, comments regarding the applications must be received at the Reserve Bank indicated or the offices of the Board of Governors not later than June 21, 1996.

A. Federal Reserve Bank of New York (Christopher J. McCurdy, Senior Vice President) 33 Liberty Street, New York, New York 10045:

1. J.P. Morgan & Co. Incorporated, New York, New York; to engage *de novo* through its subsidiary, J.P. Morgan Trust Company of Illinois, Chicago, Illinois, in trust company activities, including those of a fiduciary, investment management, agency and securities safekeeping nature, pursuant to § 225.25(b)(3) of the Board's Regulation Y. These activities will be conducted throughout the mid-western United States.

B. Federal Reserve Bank of Cleveland (R. Chris Moore, Senior Vice President) 1455 East Sixth Street, Cleveland, Ohio 44101:

1. Star Banc Corporation, Cincinnati, Ohio; to acquire a 50 percent equity interest and thereby to engage *de novo* through a subsidiary in Cincinnati, Ohio, in higher residual value leasing activities, pursuant to § 225.25(b)(5)(ii) of the Board's Regulation Y.

C. Federal Reserve Bank of Richmond (Lloyd W. Bostian, Jr., Senior Vice President) 701 East Byrd Street, Richmond, Virginia 23261:

1. NationsBank Corporation and NB Holdings Corporation, both of Charlotte, North Carolina; to acquire TAC Bancshares, Inc., Miami, Florida, and thereby indirectly acquire Chase Federal Bank, FSB, Miami, Florida, and thereby engage in the acquisition of a savings association, pursuant to § 225.25(b)(9) of the Board's Regulation Y.

Board of Governors of the Federal Reserve System, June 3, 1996.

Jennifer J. Johnson,

Deputy Secretary of the Board.

[FR Doc. 96–14374 Filed 6–6–96; 8:45 am]

BILLING CODE 6210–01–F

BOARD OF GOVERNORS OF THE FEDERAL RESERVE SYSTEM

Sunshine Act Meeting

TIME AND DATE: 10:00 a.m., Wednesday, June 12, 1996.

PLACE: Marriner S. Eccles Federal Reserve Board Building, C Street entrance between 20th and 2lst Streets, N.W., Washington, D.C. 20551.

STATUS: Closed.

MATTERS TO BE CONSIDERED:

1. Personnel actions (appointments, promotions, assignments, reassignments, and salary actions) involving individual Federal Reserve System employees.
2. Any items carried forward from a previously announced meeting.

CONTACT PERSON FOR MORE INFORMATION: Mr. Joseph R. Coyne, Assistant to the Board; (202) 452–3204. You may call (202) 452–3207, beginning at approximately 5 p.m. two business days before this meeting, for a recorded announcement of bank and bank holding company applications scheduled for the meeting.

Dated: June 5, 1996.

Jennifer J. Johnson,

Deputy Secretary of the Board.

[FR Doc. 96–14598 Filed 6–5–96; 1:04 pm]

BILLING CODE 6210–01–P

GENERAL ACCOUNTING OFFICE

Federal Accounting Standards Advisory Board

AGENCY: General Accounting Office.

ACTION: Notice of Meeting.

SUMMARY: Pursuant to section 10(a)(2) of the Federal Advisory Committee Act (Pub. L. No. 92–463), as amended, notice is hereby given that the Federal Accounting Standards Advisory Board will meet on Thursday, June 20, 1996, from 9:00 A.M. to 4:00 P.M. in room 7C13 of the General Accounting Office, 441 G St., N.W., Washington, D.C.

The purpose of the meeting is to discuss and review the (1) Codification project, (2) the *Accounting for Natural Resources* document, and (3) the Management Discussion and Analysis project.

Any interested person may attend the meeting as an observer. Board discussions and reviews are open to the public.

FOR FURTHER INFORMATION CONTACT: Ronald S. Young, Executive Staff Director, 750 First St., N.E., Room 1001, Washington, D.C. 20002, or call (202) 512–7350.

Authority: Federal Advisory Committee Act, Pub. L. No. 92–463, section 10(a)(2), 86 Stat. 770, 774 (1972) (current version at 5 U.S.C. app. section 10(a)(2) (1988); 41 CFR 101–6.1015 (1990).

Dated: June 3, 1996.

Ronald S. Young,

Executive Director.

[FR Doc. 96–14318 Filed 6–6–96; 8:45 am]

BILLING CODE 1610–01–M

GENERAL SERVICES ADMINISTRATION

Public Buildings Service; Notice of Availability for a Supplemental Draft Environmental Impact Statement; Proposed Expansion Port of Entry, Pacific Highway, Blaine, WA

The General Services Administration (GSA) hereby gives notice a Supplemental Environmental Impact Statement (SEIS) has been prepared in accordance with the National Environmental Policy Act (NEPA) of 1969, as amended for the proposed expansion of the Port of Entry at Pacific Highway, Blaine, Whatcom County, Washington. The SEIS is being made available May 31, 1996. GSA is the lead Federal agency for the preparation of the SEIS. The SEIS evaluates a no action alternative and four action alternatives.

Written comments on the alternatives, impacts, and recommended mitigation measures should be sent no later than July 1, 1996 to GSA's EIS subconsultant, Berger/ABAM Engineers Inc., 33301 Ninth Avenue South, Federal Way, Washington, 98003. Comments will also be accepted at a public hearing to be held on June 11, 1996, at the Blaine Public Library, 610 Third Street, Blaine, Washington. The meeting will be held at 6:00 p.m. Representatives of GSA and Berger/ABAM will receive comments from interested parties regarding the project proposal, the environmental analysis, and recommended mitigation measures. All comments received will be made a part of the administrative record for the SEIS and will be evaluated as part of the final environmental review process.

For further information contact Donna M. Meyer, Regional Environmental Program Officer, General Services Administration, Public Buildings Service, 400 15th Street SW., Auburn, Washington, 98001 or on (206) 931–7675.

Dated: May 29, 1996.

L. Jay Pearson,

Regional Administrator (10A).

[FR Doc. 96–14343 Filed 6–6–96; 8:45 am]

BILLING CODE 6820–23–M

DEPARTMENT OF HEALTH AND HUMAN SERVICES

Office of the Secretary

Agency Information Collection Activities; Submission for OMB Review; Comment Request

The Department of Health and Human Services, Office of the Secretary publishes a list of information collections it has submitted to the Office of Management and Budget (OMB) for clearance in compliance with the Paperwork Reduction Act of 1995 (44 U.S.C. Chapter 35) and 5 CFR 1320.5. The following are those information collections recently submitted to OMB.

1. Uniform Administrative Requirements for Grants and Cooperative Agreements to State and Local Governments (45 CFR Part 92)—0990–0169—Extension No Change—Pre-award, post-award, and subsequent reporting and recordkeeping requirements are necessary to award, monitor, close out and manage grant programs, ensure minimum fiscal control and accountability for Federal funds and deter fraud, waste and abuse. Respondents: State and Local Governments; Number of Respondents: 4000; Average Burden per Respondent: 70 hours; Total Burden: 280,000 hours.

2. JOBS Evaluation: Five Year Follow-up—New—As a part of the on-going JOBS program evaluation, the Office of the Assistant Secretary for Planning and Evaluation is planning a Five-year Recipient Survey and a Child School Progress Survey. This information will be combined with other data sources in the process of evaluating the JOBS program. The key goals of this effort are to assess the long-term effectiveness of two strategies for moving welfare recipients to work.—Respondents: individuals or households, State or local governments—Burden Information for Core Recipient Survey—Respondents: 2,250; Average Burden per Response: 30 minutes; Total Burden for Core Recipient Survey: 1,125 hours—Burden Information for Core Recipient Survey Plus Child Outcomes—Respondents: 2,340; Average Burden per Response: 1 hour; Total Burden for Core Recipient Survey Plus Child Outcomes: 2,340 hours—Burden Information for Child

School Progress Survey—Respondents: 2,025; Average Burden per Response: 30 minutes; Total Burden for Child School Progress Survey: 1012 hours—Total Burden: 4,477 hours.

OMB Desk Officer: Allison Eydt

Copies of the information collection packages listed above can be obtained by calling the OS Reports Clearance Officer on (202) 690–6207. Written comments and recommendations for the proposed information collection should be sent directly to the OMB desk officer designated above at the following address: Human Resources and Housing Branch, Office of Management and Budget, New Executive Office Building, Room 10235, 725 17th Street N.W., Washington, D.C. 20503.

Comments may also be sent to Cynthia Agens Bauer, OS Reports Clearance Officer, Room 503H, Humphrey Building, 200 Independence Avenue S.W., Washington DC, 20201. Written comments should be received within 30 days of this notice.

Dated: May 29, 1996.

Dennis P. Williams,

Deputy Assistant Secretary, Budget.

[FR Doc. 96–14398 Filed 6–6–96; 8:45 am]

BILLING CODE 4150–04–M

Public Health Service

National Institutes of Health

Submission for OMB Review; Comment Request; National 5 A Day for Better Health Follow-Up Survey

SUMMARY: Under the provisions of Section 3506(c)(2)(A) of the Paperwork Reduction Act of 1995, the National Cancer Institute (NCI), the National Institutes of Health (NIH) has submitted to the Office of Management and Budget (OMB) a request to review and approve the information on collection listed below. This proposed information collection was previously published in the Federal Register on March 12, 1996, page 10001 and allowed 60-days for public comment. No public comments were received. The purpose of this notice is to allow an additional 30 days for public comment. The National Institutes of Health may not conduct or sponsor, and the respondent is not required to respond to, an information collection that has been extended, revised, or implemented on or after October 1, 1995, unless it displays a currently valid OMB control number.

PROPOSED COLLECTION: *Title:* The National 5 A Day for Better Health Follow-up Study. *Type of Information Collection Request:* NEW. *Need and Use of Information Collection:* This study will measure five year trends in fruit and vegetable intakes and in knowledge, attitudes, and beliefs about diet and nutrition specific to fruit and vegetable intake. The primary objectives of the study are to establish current patterns in fruit and vegetable consumption, beliefs and fruit and vegetables and health, program visibility and awareness, and changes in these since baseline. The findings will provide valuable information concerning (1) the effectiveness of the National 5 A Day for Better Health Program in the first five years of its existence, and (2) will be used for program planning to help direct further 5 A Day and other intervention efforts. *Frequency of Response:* One time. *Affected Public:* Individuals or Households. *Type of Respondents:* U.S. adults 18 years and older residing in these coterminous states. The annual reporting burden is as follows:

Type of respondents	Estimated number of respondents	Estimated number of responses per respondent	Average burden hours per response	Estimated total annual burden hours requested
Group 1	2000	1	.501	1002
Group 2	2050	1	.501	514
Non-Response	150	1	.167	25
Total	4200	1	.3669	1541

The annualized cost to respondents is estimated at: $12,410. There are no Capital Costs to report. There are no Operating to Maintenance Costs to report.

REQUEST FOR COMMENTS: Written comments and/or suggestions from the public and affected agencies are invited on one or more of the following points: (1) Whether the proposed collection of information is necessary for the proper performance of the function of the agency, including whether the information will have practical utility; (2) The accuracy of the agency's estimate of the burden of the proposed collection of information, including the validity of the methodology and assumptions used; (3) Ways to enhance the quality, utility, and clarity of the information to be collected; and (4) Ways to minimize the burden to the collection of information on those who are to respond, including the use of appropriate automated, electronic, mechanical, or other technological collection techniques or other forms of information technology.

DIRECT COMMENTS TO OMB: Written comments and/or suggestions regarding the item(s) contained in this notice, especially regarding the estimated public burden and associated response time, should be directed to the: Office of Management and Budget, Office of Regulatory Affairs, New Executive Office Building, Room 10235, Washington, D.C. 20503, Attention: Desk Officer for NIH.

To request more information on the proposed project or to obtain a copy of the data collection plans and instruments, contact: Amy F. Subar, Ph.D., Susan M. Krebs-Smith, Ph.D., National Cancer Institute, EPN 313, 6130 Executive Blvd, Bethesda, MD 20892–7344, or call non-toll-free number (301) 496–8500.

COMMENTS DUE DATE: Comments regarding this information collection are best assured of having their full effect if received within 30 days of the date of this publication.

Dated: May 30, 1996.

Phillip D. Amoruso,

Executive Officer, NCI.

[FR Doc. 96–14430 Filed 6–6–96; 8:45 am]

BILLING CODE 4140–01–M

Office of the Secretary

Findings of Scientific Misconduct

AGENCY: Office of the Secretary, HHS.

ACTION: Notice.

SUMMARY: Notice is hereby given that the Office of Research Integrity (ORI) has made final findings of scientific misconduct in the following case:

Eric T. Fossel, Ph.D., Harvard Medical School: Based on ORI's analysis of the relevant evidence and conclusions submitted by the Harvard Medical

School Committee on Faculty Conduct, ORI found that Eric T. Fossel, Ph.D., former Harvard Medical School Associate Professor of Radiology at Beth Israel Hospital, committed scientific misconduct by reporting falsified research results in a Public Health Service (PHS) grant application.

Specifically, Dr. Fossel altered nuclear magnetic resonance (NMR) data in the Multicenter Breast Trial (MCBT) such that the NMR test, purporting to detect from a patient's blood sample a predisposition toward malignancy or a relapse, appeared to be more accurate, sensitive, and specific than was actually the case. Premised on these falsely reported results, Dr. Fossel proposed in a PHS grant application that the National Cancer Institute provide funds to complete the MCBT.

Dr. Fossel has entered into a Voluntary Exclusion Agreement with ORI in which he has voluntarily agreed, for the three (3) year period beginning May 9, 1996, to exclude himself from:

(1) any contracting or subcontracting with any agency of the United States Government and from eligibility for, or involvement in, nonprocurement transactions (e.g., grants and cooperative agreements) of the United States Government as defined in 45 CFR Part 76 (Debarment Regulations), and

(2) serving in any advisory capacity to PHS, including but not limited to service on any PHS advisory committee, board, and/or peer review committee, or as a consultant.

No scientific publications were required to be corrected as part of this Agreement.

FOR FURTHER INFORMATION CONTACT: Director, Division of Research Investigations, Office of Research Integrity, 5515 Security Lane, Suite 700, Rockville, MD 20852.

Chris B. Pascal,

Acting Director, Office of Research Integrity.

[FR Doc. 96–14389 Filed 6–6–96; 8:45 am]

BILLING CODE 4160–17–P

Centers for Disease Control and Prevention

Disease, Disability, and Injury Prevention and Control Special Emphasis Panel (SEP): Teleconference Meetings

In accordance with section 10(a)(2) of the Federal Advisory Committee Act (Pub. L. 92–463), the Centers for Disease Control and Prevention (CDC) announces the following committee meetings.

Name: Disease, Disability, and Injury Prevention and Control SEP: Cooperative Agreements for Prevention Centers/National Center for Chronic Disease Prevention and Health Promotion—General Special Interest Projects, Panel Number 1, Program Announcements 328, 432, and 461.

Time and Date: 1 p.m.-5 p.m., June 24, 1996.

Place: National Center for Chronic Disease Prevention and Health Promotion (NCCDPHP), CDC, Rhodes Building, Koger Office Park, 3005 Chamblee-Tucker Road, Atlanta, Georgia 30341.

Status: Closed.

Matters To Be Discussed: The meeting will include the review, discussion, and evaluation of applications received in response to Program Announcements 328, 432, and 461 entitled, ''Cooperative Agreements for Prevention Centers/ NCCDPHP—General Special Interest Projects.''

Contact Person for More Information: James E. Barrow, Deputy Director, Division of Adult and Community Health, NCCDPHP, CDC, 4770 Buford Highway, NE, M/S K30, Chamblee, Georgia 30341, telephone 770/ 488–5269.

Name: Disease, Disability, and Injury Prevention and Control SEP: Cooperative Agreements for Prevention Centers Program/ NCCDPHP—General Special Interest Projects, Panel Number 2, Program Announcements 328, 432, and 461.

Time and Date: 1 p.m.–5 p.m., June 25, 1996.

Place: NCCDPHP, CDC, Rhodes Building, Koger Office Park, 3005 Chamblee-Tucker Road, Atlanta, Georgia 30341.

Status: Closed.

Matters To Be Discussed: The meeting will include the review, discussion, and evaluation of applications received in response to Program Announcements 328, 432, and 461 entitled, ''Cooperative Agreements for Prevention Centers/ NCCDPHP—General Special Interest Projects.''

Contact Person for More Information: Michael N. Waller, Program Manager, Division of Adult and Community Health, NCCDPHP, CDC, 4770 Buford Highway, NE, M/S K30, Chamblee, Georgia 30341, telephone 770/488–5292.

Name: Disease, Disability, and Injury Prevention and Control SEP: Cooperative Agreements for Prevention Centers Program/ NCCDPHP—General Special Interest Projects, Panel Number 3, Program Announcements 328, 432, and 461.

Time and Date: 1 p.m.–5 p.m., June 26, 1996.

Place: NCCDPHP, CDC, Rhodes Building, Koger Office Park, 3005 Chamblee-Tucker Road, Atlanta, Georgia 30341.

Status: Closed.

Matters To Be Considered: The meeting will include the review, discussion, and evaluation of applications received in response to Program Announcements 328, 432, and 461 entitled, ''Cooperative Agreements for Prevention Centers/ NCCDPHP—General Special Interest Projects.''

Contact Person for More Information: Craig L. Leutzinger, Public Health Advisor, Division of Adult and Community Health, NCCDPHP, CDC, 4770 Buford Highway, NE, M/S K30, Chamblee, Georgia 30341, telephone 770/488–5304.

These meetings will be closed to the public in accordance with provisions set forth in section 552b(c) (4) and (6), title 5 U.S.C., and the Determination of the Associate Director for Management and Operations, CDC, pursuant to Pub. L. 92–463.

Dated: May 31, 1996.

John C. Burckhardt,

Acting Director, Management Analysis and Services Office, Centers for Disease Control and Prevention (CDC).

[FR Doc. 96–14381 Filed 6–6–96; 8:45 am]

BILLING CODE 4163–18–M

Food and Drug Administration

Advisory Committee Meeting; Cancellation

AGENCY: Food and Drug Administration, HHS.

ACTION: Notice.

SUMMARY: The Food and Drug Administration (FDA) is cancelling the meeting of the Science Board to the Food and Drug Administration scheduled for June 13, 1996, to provide time for the agency to continue its development of strategies to address toxicity, carcinogenicity, and biomaterials testing. The meeting was announced in the Federal Register of May 24, 1996 (61 FR 26187).

FOR FURTHER INFORMATION CONTACT: Susan A. Homire, Office of Science (HF–33), Food and Drug Administration, 5600 Fishers Lane, Rockville, MD 20857, 301–827–3340; or call the FDA Advisory Committee Information Hotline, 1–800–741–8138 (301–443–0572) in the Washington, DC area, Science Board to the Food and Drug Administration, code 12603.

Dated: June 3, 1996.

Michael A. Friedman,

Deputy Commissioner for Operations.

[FR Doc. 96–14388 Filed 6–06–96; 8:45 am]

BILLING CODE 4160–01–F

Memorandum of Understanding Between the Food and Drug Administration and the U.S. Department of Agriculture and the Russian Federation

AGENCY: Food and Drug Administration, HHS.

ACTION: Notice.

SUMMARY: The Food and Drug Administration (FDA) is providing notice of a memorandum of understanding (MOU) between FDA and the U.S. Department of Agriculture and

the Russian Federation. The purpose of the MOU is to exchange information and identify and implement technical cooperation and training activities for specialists for imported and domestic food in several areas.

DATES: The agreement became effective March 29, 1996.

FOR FURTHER INFORMATION CONTACT: Frank M. MacKeith, Center for Food Safety and Applied Nutrition (HFS–585), Food and Drug Administration, 200 C St. SW., Washington, DC 20204, 202–205–4045.

SUPPLEMENTARY INFORMATION: In accordance with 21 CFR 20.108(c), which states that all written agreements and memoranda of understanding between FDA and others shall be published in the Federal Register, the agency is publishing notice of this memorandum of understanding.

Dated: May 30, 1996.

William K. Hubbard,

Associate Commissioner for Policy Coordination.

225–96–2005

Memorandum of Understanding Between the Food and Drug Administration of the Department of Health and Human Services of the United States of America and the Foreign Agricultural Service of the Department of Agriculture of the United States of America and the State Committee for Sanitary and Epidemiological Surveillance of the Russian Federation and the Committee of the Russian Federation on Standardization, Metrology and Certification Concerning Technical Cooperation and Information Exchange on Food Safety, Quality Control, and Labeling to Promote Public Health and Facilitate Trade

The Food and Drug Administration of the Department of Health and Human Services of the United States of America,
and
The Foreign Agricultural Service of the Department of Agriculture of the United States of America,
on the one hand; and
The State Committee for Sanitary and Epidemiological Surveillance (GOSKOMSANEPIDNADZOR) of the Russian Federation,
and
The Committee of the Russian Federation on Standardization, Metrology and Certification (GOSSTANDART),
on the other hand;

In keeping with the Agreement on Cooperation in the Fields of Public Health and Biomedical Research signed on January 14, 1994, by the Governments of the United States and the Russian Federation,

Desiring to strengthen the bonds of friendship and cooperation between the Russian Federation and the United States of America,

Recognizing that both the Russian Federation and the United States of America give special importance to the protection of public health by way of ensuring the safety, quality, and correct labeling of food,

Desiring to facilitate the trade of food between the Russian Federation and the United States of America,

And noting that increasing global trade of food and global trade agreements require that governments work to harmonize sanitary measures while not compromising food safety,

Have reached the following general understanding to guide their cooperation:

I. Objectives

The objectives of this Memorandum of Understanding are to:

A. Exchange information and identify and implement technical cooperation and training activities for specialists, including conducting workshops. These activities may be undertaken for imported and domestic food in the following areas: food safety, quality, labeling, laws and regulations; food examination, sanitation and control procedures and policies; risk assessment; analytical methodology; consumer food hygiene education; and other areas where additional information is needed concerning either side's food safety, quality control, and labeling systems.

B. Assist in ensuring transparency in the establishment and application of each side's sanitary measures.

C. Identify the systems used by each side and the type of documents that would be acceptable to each side to demonstrate the safety, quality, and labeling of food in accordance with the laws in the Russian Federation and the United States of America.

D. Provide confidence and build foundations for future agreements to ensure the safety, quality and correct labeling of food and to facilitate food trade for both the Russian Federation and the United States of America.

E. Develop and enhance systems for consideration and resolution of issues related to food safety, quality, and labeling to promote public health and facilitate trade between the Russian Federation and the United States of America.

F. Exchange information on the activities and deliberations of international food safety and quality standard-setting organizations, such as the Codex Alimentarius Commission. Facilitate the participation in such international organizations, and work within the framework of multilateral agreements toward harmonization of food requirements.

G. Provide distribution of information on each government's food import requirements to exporters in the Russian Federation and the United States of America.

II. Implementation

To achieve these goals, both sides intend to:

A. Meet and consult periodically to discuss emerging issues and to promote cooperation in carrying out the objectives of this Memorandum of Understanding. Meetings should alternate between the Russian Federation and the United States of America and will be held on mutually agreeable dates and at mutually agreeable places. Each side should designate a Chairperson. Together, they should develop meeting agendas and circulate appropriate information to participants prior to the meeting. Agenda topics and briefing papers should be identified as items for active discussion, information requests, or training needs. In addition, the Chairperson for the host country should be responsible for preparing and obtaining agreement on the minutes of the meeting.

B. Facilitate the import and export of food through the exchange of regulatory information on sanitary measures, requirements, and standards.

C. Work towards identifying the kinds of documents that demonstrate safety, quality, and correct labeling of food in accordance with the regulations and laws of the Russian Federation and the United States of America.

D. Identify and consider conducting technical cooperation and training programs for specialists from GOSKOMSANEPIDNADZOR, GOSSTANDART, and the Institute of Nutrition, Russian Academy of Medical Sciences.

E. Facilitate cooperation between the scientific centers of the Russian Federation and the United States of America, working in the area of food safety, quality, and labeling.

F. Provide information, as available, on the safety, quality, and labeling of food for export and on the manufacturers, producers or processors of this food.

All activities carried out under this Memorandum of Understanding are subject to the availability of appropriated funds, resources and personnel and are to be conducted in accordance with the laws of the Russian Federation and the United States of America.

III. Coordinators

Each participant in this Memorandum of Understanding should name a contact person to assist in logistical activities, and coordinate followup actions and implement the decisions reached during the meetings.

Activities under this Memorandum of Understanding will begin on the last date of signature of all participants. After the first year the participants plan to evaluate the Memorandum, thereafter, no less than once every 5 years. It may be amended by mutual written consent or terminated by any participant upon a 60-day written notice to the other participants.

Done in duplicate, in the Russian and English languages.

For the Department of Health and Human Services of the United States of America:

/s/ Donna E. Shalala
January 30, 1996
Washington, D.C.

For the Department of Agriculture of the United States of America: and Certification:

/s/ Richard E. Rominger
January 30, 1996
Washington, D.C.

For the Food and Drug Administration of the United States of America:

/s/ Mary Pendergast
January 30, 1996
Washington, D.C.

For the State Committee for Sanitary and Epidemiological Surveillance of the Russian Federation:

/s/ G. G. Onitshenko
January 30, 1996
Washington, D.C.

For the Committee of the Russian Federation on Standardization, Metrology, and Certification:

/s/ S. Bezverkhi
March 29, 1996
Moscow, Russian Federation

[FR Doc. 96–14387Filed 6–06–96; 8:45 am]

BILLING CODE 4160–01–F

National Institutes of Health

Prostate, Lung, Colorectal and Ovarian Cancer Screening Trial; Proposed Collection; Comment Request;

SUMMARY: In compliance with the requirement of Section 3506(c)(2)(A) of the Paperwork Reduction Act of 1995, for opportunity for public comment on proposed data collection projects, the National Cancer Institute (NCI), the National Institutes of Health (NIH) will publish periodic summaries of proposed projects to be submitted to the Office of Management and Budget (OMB) for review and approval.

PROPOSED COLLECTION: *Title:* Prostate, Lung, Colorectal and Ovarian Cancer Screening Trial. *Type of Information Collection Request:* EXTENSION, OMB control number 0925–0407, expiration date September 30, 1996. *Need and Use of Information Collection:* This trial is designed to determine if screening for prostate, lung, colorectal and ovarian cancer can reduce mortality from these cancers which currently cause an estimated 251,000 deaths annually in the U.S. The design is a two-armed randomized trial of men and women aged 55 to 74 at entry. The anticipated total sample size, after four and one half years of recruitment, is projected to be 148,000. The primary endpoint of the trial is cancer-specific mortality for each of the four cancer sites (prostate, lung, colorectal, and ovary). In addition, cancer incidence, stage shift, and case survival are to be monitored to help understand and explain results. Biologic prognostic characteristics of the cancers will be measured and correlated with mortality to determine the mortality predictive value of these intermediate endpoints. Basic demographic data, risk factor data for the four cancer sites and screening history data, as collected from all subjects at baseline, will be used to assure comparability between the screening and control groups and make appropriate adjustments in analysis. Further, demographic and risk factor information will be used to analyze the differential effectiveness of screening in high versus low risk individuals. *Frequency of Response:* On occasion. *Affected Public:* Individuals or households. *Type of Respondents:* Adult men and women. The annual reporting burden is as follows: *Estimated Number of Respondents:* 75,333; *Estimated Number of Responses per Respondent:* 1.7; *Average Burden Hours Per Response:* .573; and *Estimated Total Annual Burden Hours Requested:* 73,400. *The annualized cost to respondents is estimated at:* $734,290. There are no Capital Costs to report. There are no Operating or Maintenance Costs to report.

REQUEST FOR COMMENTS: Written comments and/or suggestions from the public and affected agencies should address one or more of the following points: (1) Evaluate whether the proposed collection of information is necessary for the proper performance of the function of the agency, including whether the information will have practical utility; (2) Evaluate the accuracy of the agency's estimate of the burden of the proposed collection of information, including the validity of the methodology and assumptions used; (3) Enhance the quality, utility, and clarity of the information to be collected; and (4) Minimize the burden of the collection of information on those who are to respond, including the use of appropriate automated, electronic, mechanical, or other technological collection techniques or other forms of information technology.

FOR FURTHER INFORMATION CONTACT: To request more information on the proposed project or to obtain a copy of the data collection plans and instruments, contact Dr. John Gohagan, Chief, Early Detection Branch, EDCOP, National Cancer Institute, NIH, EPN Building, Room 330, 6130 Executive Boulevard, Bethesda, MD 20892–7346, or call non-toll-free number (301) 496–3982 or E-mail your request, including your address to: gohaganj@dcpcepn.nci.nih.gov

COMMENTS DUE DATE: Comments regarding this information collection are best assured of having their full effect if received within 60-days of the date of this publication.

Dated: May 30, 1996.

Philip D. Amoruso,

Executive Officer, NCI.

[FR Doc. 96–14431 Filed 6–6–96; 8:45 am]

BILLING CODE 4140–01–M

National Center for Human Genome Research; Notice of Closed Meetings

Pursuant to Section 10(d) of the Federal Advisory Committee Act, as amended (5 U.S.C. Appendix), notice is hereby given of the following meetings of the National Center for Human Genome Research Special Emphasis Panel:

Agenda/Purpose: To review and evaluate grant applications and/or contract proposals.

Name of Committee: National Center for Human Genome Research Special Emphasis Panel 01.

Date: June 24, 1996.

Time: 7:00 p.m.

Place: NIH, Natcher (Building 45), Rooms G1/G2, 9000 Rockville Pike, Bethesda, Maryland

Contact Person: Ms. Linda Engel, Chief, Office of Scientific Review, National Center for Human Genome Research, National Institutes of Health, Building 38A, Room 604, Bethesda, Maryland 20892, (301) 402–0838.

Name of Committee: National Center for Human Genome Research Special Emphasis Panel 02.

Date: June 25, 1996.

Time: 9:00 a.m.

Place: NIH, Natcher (Building 45), Rooms G1/G2, 9000 Rockville Pike, Bethesda, Maryland.

Contact Person: Ms. Linda Engel, Chief, Office of Scientific Review, National Center for Human Genome Research, National Institutes of Health, Building 38A, Room 604, Bethesda, Maryland 20892, (301) 402–0838.

Name of Committee: National Center for Human Genome Research Special Emphasis Panel 03.

Date: June 25, 1996.

Time: 9:00 a.m.

Place: NIH, Natcher (Building 45), Rooms F1/F2, 9000 Rockville Pike, Bethesda, Maryland.

Contact Person: Ms. Linda Engel, Chief, Office of Scientific Review, National Center for Human Genome Research, National Institutes of Health, Building 38A, Room 604, Bethesda, Maryland 20892, (301) 402–0838.

The meetings will be closed in accordance with the provisions set forth in sections 552b(c)(4) and 552b(c)(6), Title 5, U.S.C. The applications and/or contract proposals, and the discussions could reveal confidential trade secrets or commercial property such as patentable material, and personal information concerning individuals associated with applications, the disclosure of which would constitute a clearly unwarranted invasion of personal privacy.

This notice is being published less than fifteen days prior to the meetings due to the urgent need to meet timing limitations imposed by the grant review cycle.

(Catalog of Federal Domestic Assistance Program No. 93.172, Human Genome Research.)

Dated: June 4, 1996.

Susan K. Feldman,

Committee Management Officer, NIH.

[FR Doc. 96–14432 Filed 6–6–96; 8:45 am]

BILLING CODE 4140–01–M

National Institute on Deafness and Other Communication Disorders; Notice of Closed Meeting

Pursuant to Section 10(d) of the Federal Advisory Committee Act, as amended (5 United States Code, Appendix 2), notice is hereby given of the following meeting;

Name of Committee: National Institute on Deafness and Other Communication Disorders Special Emphasis Panel.

Date: June 28, 1996.

Time: 8:00 a.m.–5 p.m.

Place: Doubletree Hotel, 1750 Rockville Pike, Rockville MD 20852.

Contact Person: Mary Nekola, Ph.D., Scientific Review Administrator, NIDCD/DEA/SRB, EPS Room 400C, 6120 Executive Boulevard, MSC 7180, Bethesda MD 20892–7180, 301–496–8683.

Purpose/Agenda: To review and evaluate Small Grant applications. The meeting will be closed in accordance with the provisions set forth in sections 552b(c)(4) and 552b(c)(6), Title 5, United States Code. The applications and/or proposals and the discussion could reveal confidential trade secrets or commercial property such as patentable material and personal information concerning individuals associated with the applications and/or proposals, the disclosure of which could constitute a clearly unwarranted invasion of personal privacy.

(Catalog of Federal Domestic Assistance Program No. 93.173 Biological Research Related to Deafness and Communication Disorders)

Dated: June 1, 1996.

Susan K. Feldman,

Committee Management Officer, NIH.

[FR Doc. 96–14427 Filed 6–6–96; 8:45 am]

BILLING CODE 4140–01–M

National Institute of Mental Health; Notice of Closed Meeting

Pursuant to Section 10(d) of the Federal Advisory Committee Act, as amended (5 U.S.C. Appendix 2), notice is hereby given of the following meeting of the National Institute of Mental Health Initial Review Group:

Agenda/Purpose: To review and evaluate grant applications.

Committee Name: Mental Health Small Business Research Review Committee.

Date: June 24–June 25, 1996.

Time: 8:30 a.m.

Place: Chevy Chase Holiday Inn, 5520 Wisconsin Avenue, Chevy Chase, MD 20815.

Contact Person: Richard Johnson, Parklawn Building, Room 9C–18, 5600 Fishers Lane, Rockville, MD 20857, Telephone: 301–443–1367.

The meeting will be closed in accordance with the provisions set forth in secs. 552b(c)(4) and 552b(c)(6), Title 5, U.S.C. Applications and/or proposals and the discussions could reveal confidential trade secrets or commercial property such as patentable material and personal information concerning individuals associated with the applications and/or proposals, the disclosure of which would constitute a clearly unwarranted invasion of personal privacy.

(Catalog of Federal Domestic Assistance Program Numbers 93.242, 93.281, 93.282)

Dated: June 1, 1996.

Susan K. Feldman,

Committee Management Officer, NIH.

[FR Doc. 96–14429 Filed 6–6–96; 8:45 am]

BILLING CODE 4140–01–M

Division of Research Grants; Notice of Closed Meetings

Pursuant to Section 10(d) of the Federal Advisory Committee Act, as amended (5 U.S.C. Appendix 2), notice is hereby given of the following Division of Research Grants Special Emphasis Panel (SEP) meetings:

Purpose/Agenda: To review individual grant applications.

Name of SEP: Microbiological and Immunological Sciences.

Date: June 11, 1996.

Time: 10:30 a.m.

Place: NIH, Rockledge 2, Room 4182, Telephone Conference.

Contact Person: Dr. William Branche, Scientific Review Administrator, 6701 Rockledge Drive, Room 4182, Bethesda, Maryland 20892, (301) 435–1148.

Name of SEP: Microbiological and Immunological Sciences.

Date: June 12, 1996.

Time: 1:30 p.m.

Place: NIH, Rockledge 2, Room 4182, Telephone Conference.

Contact Person: Dr. William Branche, Scientific Review Administrator, 6701 Rockledge Drive, Room 4182, Bethesda, Maryland 20892, (301) 435–1148.

Name of SEP: Biological and Physiological Sciences.

Date: June 17, 1996.

Time: 12:30 p.m.

Place: Embassy Suites Hotel, Washington, DC.

Contact Person: Ms. Carol Campbell, Scientific Review Administrator, 6701 Rockledge Drive, Room 5196, Bethesda, Maryland 20892, (301) 435–1257.

This notice is being published less than 15 days prior to the above meetings due to the urgent need to meet timing limitations imposed by the grant reveiw and funding cycle.

Purpose/Agenda: To review Small Business Innovation Research.

Name of SEP: Microbiological and Immunological Sciences.

Date: June 27–28, 1996.

Time: 8:30 a.m.

Place: Holiday Inn, Chevy Chase, MD.

Contact Person: Dr. Marcel Pons, Scientific Review Administrator, 6701 Rockledge Drive, Room 4196, Bethesda, Maryland 20892, (301) 435–1217.

Name of SEP: Multidisciplinary Sciences.

Date: July 8–9, 1996.

Time: 8:00 a.m.

Place: Doubletree Hotel, Rockville, MD.

Contact Person: Dr. Nadarajen Vydelingum, Scientific Review Administrator, 6701 Rockledge Drive, Room 5210, Bethesda, Maryland 20892, (301) 435–1176.

Name of SEP: Biological and Physiological Sciences.

Date: July 15, 1996.

Time: 9:00 a.m.

Place: Washington/Dulles Airport Marriott Hotel, Chantilly, VA.

Contact Person: Dr. Harish Chopra, Scientific Review Administrator, 6701 Rockledge Drive, Room 5112, Bethesda, Maryland 20892, (301) 435–1169.

The meetings will be closed in accordance with the provisions set forth in secs. 552b(c)(4) and 552b(c)(6), Title 5, U.S.C. Applications and/or proposals and the discussions could reveal confidential trade secrets or commercial property such as patentable material and personal information concerning individuals associated with the applications and/or proposals, the disclosure of which would constitute a clearly unwarranted invasion of personal privacy.

(Catalog of Federal Domestic Assistance Program Nos. 93.306, 93.333, 93.337, 93.393–93.396, 93.837–93.844, 93.846–93.878, 93.892, 93.893, National Institutes of Health, HHS)

Dated: June 1, 1996.

Susan K. Feldman,

Committee Management Officer, NIH.

[FR Doc. 96–14428 Filed 6–6–96; 8:45 am]

BILLING CODE 4140–01–M

Division of Research Grants; Notice of Closed Meetings

Pursuant to Section 10(d) of the Federal Committee Act, as amended (5 U.S.C. Appendix 2), notice is hereby given of the following Division of Research Grants Special Emphasis Panel (SEP) meetings:

Purpose/Agenda: To review individual grant applicants.

Name of SEP: Biological and Physiological Sciences.

Date: July 8, 1996.

Time: 11:00 a.m.

Place: NIH, Rockledge 2, Room 5196, Telephone Conference.

Contact Person: Ms. Carol Campbell, Scientific Review Administrator, 6701 Rockledge Drive, Room 5196, Bethesda, Maryland 20892, (301) 435–1257.

Name of SEP: Biological and Physiological Sciences.

Date: July 9, 1996.

Time: 10:00 a.m.

Place: NIH, Rockledge 2, Room 5196, Telephone Conference.

Contact Person: Ms. Carol Campbell, Scientific Review Administrator, 6701 Rockledge Drive, Room 5196, Bethesda, Maryland 20892, (301) 435–1257.

The meeting will be closed in accordance with the provisions set forth in sections 552b(c)(4) and 552b(c)(6), Title 5, U.S.C. Applications and/or proposals and the discussions could reveal confidential trade secrets or commercial property such as patentable material and personal information concerning individuals associated with the applications and/or proposals, the disclosure of which would constitute a clearly unwarranted invasion of personal privacy.

(Catalog of Federal Domestic Assistance Program Nos. 93.306, 93.333, 93.337, 93.393–93.396, 93.837–93.844, 93.846–93.878, 93.892, 93.893, National Institutes of Health, HHS)

Dated: June 4, 1996.

Susan K. Feldman,

Committee Management Officer, NIH.

[FR Doc. 96–14433 Filed 6–6–96; 8:45 am]

BILLING CODE 4140–01–M

Substance Abuse and Mental Health Services Administration

SAMHSA Special Emphasis Panel II; Meeting

Pursuant to Public Law 92–463, notice is hereby given of the following meeting of the SAMHSA Special Emphasis Panel II in June.

A summary of the meeting may be obtained from: Ms. Dee Herman, Committee Management Liaison, SAMHSA Office of Extramural Activities Review, 5600 Fishers Lane, Room 17–89, Rockville, Maryland 20857. Telephone: (301)443–4783.

Substantive program information may be obtained from the individual named as Contact for the meeting listed below.

The meeting will include the review, discussion and evaluation of individual contract proposals. These discussions could reveal personal information concerning individuals associated with the proposals and confidential and financial information about an individual's proposal. The discussion may also reveal information about procurement activities exempt from disclosure by statute and trade secrets and commercial or financial information obtained from a person and privileged and confidential. Accordingly, the meeting is concerned with matters exempt from mandatory disclosure in Title 5 U.S.C. 552b(c)(3), (4), and (6) and 5 U.S.C. App. 2, § 10(d).

Committee Name: SAMHSA Special Emphasis Panel II.

Meeting Date: June 17, 1996.

Place: Doubletree Hotel, Randolph Room, 1750 Rockville Pike, Rockville, MD 20852.

Closed: June 17, 1996, 8:30 a.m. to 5:00 p.m.

Contact: Constance M. Burtoff, M.A., Room 17–89, Parklawn Building, Telephone: (301)443–2437 and FAX: (301)443–3437.

This notice is being published less than 15 days prior to the meeting due to the urgent need to meet timing limitations imposed by the review and funding cycle.

Dated: June 4, 1996.

Jeri Lipov,

Committee Management Officer SAMHSA.

[FR Doc. 96–14448 Filed 6–6–96; 8:45 am]

BILLING CODE 4162–20–P

DEPARTMENT OF HOUSING AND URBAN DEVELOPMENT

[Docket Nos. FR–3878–N–05 and FR–4047–N–02]

Office of the Assistant Secretary for Fair Housing and Equal Opportunity; Announcement of Funding Awards Fair Housing Initiatives Program FY 1995 and FY 1996

AGENCY: Office of the Assistant Secretary for Fair Housing and Equal Opportunity, HUD.

ACTION: Announcement of funding awards.

SUMMARY: In accordance with section 102(a)(4)(C) of the Department of Housing and Urban Development Reform Act of 1989, this document notifies the public of additional FY 1995 funding awards made under the Fair Housing Initiatives Program (FHIP). The purpose of this document is to announce the names and addresses of the award winners and the amount of the awards to be used to strengthen the Department's enforcement of the Fair Housing Act and to further fair housing.

FOR FURTHER INFORMATION CONTACT: Maxine B. Cunningham, Director, Office of Fair Housing Initiatives and Voluntary Programs, Room 5234, 451 Seventh Street, S.W., Washington, D.C. 20410–2000. Telephone number (202) 708–0800 (this is not a toll-free number). A telecommunications device for hearing- and speech-impaired individuals (TTY) is available at 1–800–877–8339 (Federal Information Relay Service).

SUPPLEMENTARY INFORMATION: Title VIII of the Civil Rights Act of 1968, as amended, 42 U.S.C. 3601–19 (The Fair Housing Act), charges the Secretary of Housing and Urban Development with responsibility to accept and investigate complaints alleging discrimination based on race, color, religion, sex, handicap, familial status or national origin in the sale, rental, or financing of most housing. In addition, the Fair Housing Act directs the Secretary to coordinate with State and local agencies administering fair housing laws and to cooperate with and render technical assistance to public or private entities carrying out programs to prevent and eliminate discriminatory housing practices.

Section 561 of the Housing and Community Development Act of 1987, 42 U.S.C. 3616 note, established the FHIP to strengthen the Department's enforcement of the Fair Housing Act and to further fair housing. This program assists projects and activities designed to enhance compliance with the Fair Housing Act and substantially equivalent State and local fair housing laws. Implementing regulations are found at 24 CFR Part 125.

The FHIP has four funding categories: the Administrative Enforcement Initiative, the Education and Outreach Initiative, the Private Enforcement Initiative, and the Fair Housing Organizations Initiative. This notice announces awards made under the Education and Outreach Initiative and the Private Enforcement Initiative.

The Department announced in the Federal Register on May 24, 1996 (61 FR 26362) the availability of $4,894,000 to be utilized from the FY 1996 NOFA for funding of FY 1995 awards. This Notice announces awards to nine organizations that submitted applications under the FY 1995 FHIP NOFA published in the Federal Register on April 11, 1995 (60 FR 18444). These recipients received scores that made them the next eligible applicants for funding but they did not receive FY 1995 funding.

The Department reviewed, evaluated and scored the applications received based on the criteria in the FY 1995 FHIP NOFA. As a result, HUD has funded the applications announced in Appendix A, and in accordance with section 102(a)(4)(C) of the Department of Housing and Urban Development Reform Act of 1989 (Pub. L. 101–235, approved December 15, 1989), the Department is hereby publishing details concerning the recipients of funding awards in Appendix A of this document.

Dated: May 28, 1996.

Elizabeth K. Julian,

Assistant Secretary for Fair Housing and Equal Opportunity.

APPENDIX A.—FY 95 FAIR HOUSING INITIATIVES PROGRAM AWARDS FUNDED OUT OF FY 96 FUNDS

Applicant name and address	Contact name and phone number/fax number	Region	Single or multi-year funding	Amount requested (funded from FY 96 appropriation)
Education and Outreach Initiative—National Program Component				
Massachusetts Housing Finance Agency, One Beacon Street, Boston, Massachusetts 02108	Steven D. Pierce, Executive Director, 617–854–1000	1	S	$368,138.
National Puerto Rican Coalition, 1700 K Street, NW, Suite 500, Washington, DC 20006	Manuel Mirabal, President & CEO, 202–223–3915	3	S	446,185 (approved for $450,000 if additional funds become available through neg. of other 8 grants)
Private Enforcement Initiative—Four-Year Component				
Open Housing Center, 594 Broadway, Room 608, New York, New York 10012	Sylvia Kramer, Executive Director, 212–941–6101	2	M	600,000.
Fair Housing Council of Greater Washington, 1212 New York Avenue, Suite 500, Washington, DC 20005	David Berenbaum, Executive Director, 202–289–5360	3	M	600,000.
Jacksonville Area Legal Aid, Inc., 604 Hogan Street, Jacksonville, Florida 32202	Michael G. Figgins, Executive Director, 904–356–8371	4	M	600,000.
Leadership Council for Metropolitan Open Communities, 401 South State Street, Suite 860, Chicago, Illinois 60605	Aurie Pennick, President, 312–341–5678	5	M	597,675.
Austin Tenant's Council, 1619 East Cesar Chavez, Austin, Texas 78702	Katherine Stark, Executive Director, 512–474–0196	6	M	591,803.
Project Sentinel, 430 Sherman Avenue, Suite 308, Palo Alto, California 94306	Ann Marquart, Executive Director, 415–321–6291	9	M	533,357.
Arizona Fair Housing Center, 13201 N. 35th Ave., Suite 19, Phoenix, Arizona 85029	Henry Cabirac, Jr., Executive Director, 602–548–1599	9	M	556,842.

[FR Doc. 96–14426 Filed 6–06–96; 8:45 am]
BILLING CODE 4210–28–P

[Docket Nos. FR–3381–N–02; FR–3303–N–04; FR–3557–N–03; FR–3519–N–02; and FR–3571–N–04]

Office of the Assistant Secretary for Public and Indian Housing; Announcement of Funding Awards for Fiscal Years 1993 and 1994 for the Rental Voucher Program and Rental Certificate Program

AGENCY: Office of the Assistant Secretary for Public and Indian Housing, HUD.

ACTION: Announcement of funding awards.

SUMMARY: In accordance with section 102(a)(4)(C) of the Department of Housing and Urban Development Reform Act of 1989, this document notifies the public of funding awards for Fiscal Year 1993 to housing agencies (HAs) under the Section 8 rental voucher and rental certificate programs for the Family Unification, Moving to Opportunity for Fair Housing Demonstration, Veterans Affairs Supportive Housing and the HOPE for Elderly Independence Programs. The purpose of this Notice is to publish the names and addresses of the award winners and the amount of the awards made available by HUD to provide rental assistance to very low-income families.

FOR FURTHER INFORMATION CONTACT: Gerald J. Benoit, Director, Operations Division, Office of Rental Assistance, Office of Public and Indian Housing, Room 4220, Department of Housing and Urban Development, 451 Seventh Street, S.W., Washington, D.C. 20410–8000, telephone (202) 708–0477 (this telephone number is not toll-free.) A telecommunications device for hearing- and speech-impaired individuals (TTY) is available at 1–800–877–8339 (Federal Information Relay Service).

SUPPLEMENTARY INFORMATION: The purpose of the rental voucher and rental certificate programs is to assist eligible families to pay the rent for decent, safe, and sanitary housing. The FY 1993 awards announced in this notice were selected for funding consistent with the provisions in the Notices of Funding Availability (NOFAs) published in the Federal Register.

The Family Unification Demonstration Program is authorized by section 8(x) of the U.S. Housing Act of 1937, as added by section 553 of the National Affordable Housing Act (Pub. L. 101–625, approved November 28, 1990) (42 U.S.C. 1437f(x); the VA. HUD-Independent Agencies Appropriations Act of 1992 (Pub. L. 102–139, approved October 28, 1991) (HUD Appropriations Act of 1992), and the VA, HUD-Independent Agencies Act of 1992 (Pub. L. 102–389, approved October 6, 1992) (Appropriation Act of 1993).

The FY 1993 Family Unification NOFA was published in the Federal Register on July 6, 1993 (58 FR 36266), and invited HAs to apply for funds available under the Section 8 rental certificate programs. The purpose of the Family Unification Program is to provide housing assistance to families for whom the lack of adequate housing is a primary factor in the separation, or imminent separation, of children from their families. A total of $72,431,000 of budget authority for rental vouchers and rental certificates (1,651 units) was awarded to recipients.

The Moving to Opportunity (MTO) for Fair Housing Demonstration program is authorized under Title I, Subtitle C, Section 152 of the Housing and Community Development Act of 1992 and the ''Annual Contributions for Assisted Housing'' heading of Title II of the VA, HUD-Independent Agencies Appropriations Act of 1992 (Pub. L. 102–139, approved October 28, 1991).

The FY 1993 MTO Demonstration program NOFA was published in the Federal Register on August 16, 1993 (58

FR 43458), and invited housing agencies in the largest 21 metropolitan areas nationwide to apply for funding. The MTO program provides rental assistance to families with children who reside in public housing and project-based Section 8 to move out of areas of high-poverty concentrations to areas of low-poverty concentration. A total of $49.5 million of rental voucher funding (940 units) and $18.9 million of rental certificate funding (388 units) and $499,999 of housing counseling funds was awarded to housing agencies.

The Veterans Affairs Supportive Housing (VASH) program is authorized by the Departments of Veterans Affair and Housing and Urban Development, and Independent Agencies Appropriations Act of 1993 (Pub. L. 102–389, approved October 6, 1992).

The FY 1993 VASH program NOFA was published in the Federal Register on September 30, 1993 (58 FR 51192), and invited housing agencies to apply for funding. The VASH program is a joint effort of HUD and the Department of Veterans Affairs that provides rental assistance to homeless veterans who qualify based on their participation in a VA medical center program. A total of $19.1 million of rental voucher funding (590 units) was awarded to housing agencies.

The Elderly Independence demonstration is authorized by section 803 of the National Affordable Housing Act (42 U.S.C. 8012) (NAHA). The HOPE for Elderly Independence Program Guidelines were published in the Federal Register on February 4, 1991 (56 FR 4506). The application submission and processing requirements contained in the February 4, 1991 Guidelines were amended by notice published in the Federal Register on May 29, 1992 (57 FR 22816).

The FY 1993 HOPE for Elderly Independence program NOFA was published in the Federal Register on July 22, 1993 (58 FR 39372), and invited housing agencies to apply for funding. The Elderly Independence program was designed to provide rental assistance and supportive services to the frail elderly in order to prevent the placement of the frail elderly into nursing homes. A total of $32.1 million of five-year Section 8 rental voucher budget authority (1,186 units) was awarded to housing agencies. In addition, a total of $8.5 million in grant funds for supportive services for the frail elderly was awarded to housing agencies.

The HOPE for Elderly Independence Multifamily Project Demonstration is authorized by section 803(h) of the National Affordable Housing Act (42 U.S.C. 8012) (NAHA). Section 8 project-based certificate (PBC) assistance is governed by section 8(d)(2)(B) of the U.S. Housing Act of 1937. The Multifamily Project Demonstration differs from the HOPE for Elderly Independence (Nationwide) Demonstration, the NOFA for which was published on July 22, 1993 (58 FR 39372), in that the Multifamily Project Demonstration is limited to one multifamily housing project in one HUD Region and uses section 8 PBC assistance instead of tenant-based section 8 rental vouchers or certificates. The Project Guidelines governing the Multifamily Project Demonstration are consistent with, but not identical to, the Program Guidelines for the HOPE for Elderly Independence (Nationwide) Demonstration, published in the Federal Register on February 4, 1991 (56 FR 4506), and amended on May 29, 1992 (57 FR 22816).

The FY 1994 HOPE for Elderly Independence Multifamily Project Demonstration NOFA was published in the Federal Register on April 5, 1994 (59 FR 16050), and invited housing agencies in HUD's Region I, which included the States of Maine, New Hampshire, Vermont, Connecticut, Massachusetts and Rhode Island, to apply for funding. The purpose of the Elderly Independence Multifamily Project Demonstration was to determine the feasibility of using Section 8 project-based rental certificate funding to assist frail elderly persons to live independently in a single multifamily housing project designed for elderly persons and persons with disabilities. HUD awarded $5,440,500 in Section 8 rental certificate funding and $990,805 in supportive services grant funds to the Westbrook Housing Authority, P.O. Box 349, Westbrook, Maine 04092–0000.

In accordance with section 102(a)(4)(C) of the Department of Housing and Urban Development Reform Act of 1989 (Pub. L. 101–235, approved December 15, 1989), the Department is hereby publishing the names, addresses, and amounts of those awards as shown on the attachment.

Dated: June 3, 1996.

Kevin E. Marchman,

Acting Assistant Secretary for Public and Indian Housing.

FY1993 SECTION 8 FAMILY UNIFICATION AWARDS; RENTAL CERTIFICATE PROGRAM

Housing agency name	Housing agency address	Units	Budget authority
BEXAR COUNTY	1405 N MAIN, SUITE 240, SAN ANTONIO, TX 78212–0000.	70	$2,184,840
CITY OF REDDING HOUSING AUTHORITY	760 PARKVIEW AVE, REDDING, CA 96001–3396	25	566,675
PRINCE GEORGE'S COUNTY HOUSING AUTHORITY	94OO PEPPERCORN, LANDOVER, MD 20785–0000	35	2,354,240
BALTIMORE COUNTY	400 WASHINGTON AVENUE, TOWSON, MD 21204–0000.	35	1,391,320
DALLAS HOUSING AUTHORITY	3939 N HAMPTON, DALLAS, TX 75212–0000	70	2,654,700
CHARLOTTE HOUSING AUTHORITY	P O BOX 36795, CHARLOTTE, NC 28236–0000	35	1,226,455
ALEXANDRIA CITY REDEVELOPMENT & HOUSING AUTHORITY.	600 N FAIRFAX STREET, ALEXANDRIA, VA 22314–0000.	70	4,364,255
DEKALB COUNTY	P O BOX 1627, DECATUR, GA 30031–0000	70	2,811,900
JERSEY CITY HOUSING AUTHORITY	400 US HIGHWAY #1, JERSEY CITY, NJ 07306–0000	70	3,822,000
MERTOPOLITAN COUNCIL	MEARS PARK CENTRE, ST. PAUL, MN 55101–2016	35	1,654,800
ALBEMARLE COUNTY DEPARTMENT OF FINANCE	401 MCINTIRE ROAD, CHARLOTTESVILLE, VA 22902–4596.	35	1,287,855
LUCAS METRO HOUSING AUTHORITY	P.O. BOX 477, TOLEDO, OH 43692–0000	70	2,603,335
HOUSING AUTHORITY OF WINSTON-SALEM	901 CLEVELAND AVENUE, WINSTON-SALEM, NC 28101–0000.	35	1,108,715
GRAHAM HOUSING AUTHORITY	P O BOX 88, GRAHAM, NC 27253–0000	70	1,832,950
FAIRFAX COUNTY REDEVELOPMENT & HOUSING AUTHORITY.	3700 PENDER DRIVE, FAIRFAX, VA 22030–0000	25	1,501,780
FORT WORTH HOUSING AUTHORITY	P O BOX 430, FORT WORTH, TX 76101–0000	49	2,150,940

FY1993 SECTION 8 FAMILY UNIFICATION AWARDS; RENTAL CERTIFICATE PROGRAM—Continued

Housing agency name	Housing agency address	Units	Budget authority
AKRON METROPOLITAN HOUSING AUTHORTIY	180 W CEDAR STREET, AKRON, OH 44307–0000	70	2,636,095
VIRGINIA HOUSING DEVELOPMENT AUTHORITY	601 S. BELVIDERE STREET, RICHMOND, VA 23225–0000.	77	3,874,995
SANTA CLARA COUTY	505 WEST JULIAN STREET, SAN JOSE, CA 95110–0000.	70	4,765.535
SAN ANTONIO	P O DRAWER 1300, SAN ANTONIO, TX 78295–0000	70	2,281,260
SANTA MONICA	1685 MAIN STREET, SANTA MONICA, CA 90401–0000	70	3,653,960
SAVANNAH	P O BOX 1179, SAVANNAH, GA 31402–0000	70	2,474,430
SHASTA COUNTY	1670 MARKET STREET STE 300, REDDING, CA 96001–0000.	25	662,075
STANISLAUS COUNTY	P O BOX 3958, MODESTO, CA 95352–0000	70	2,484,690
SACRAMENTO HOUSING & REDEVELOPMENT AUTHORITY.	SACRAMENTO, CA 95812–1834	25	986,125
LAKEWOOD CITY HOUSING AUTHORITY	P O BOX 1543, LAKEWOOD, NJ 08701–0000	25	1,608,300
TAMPA HOUSING AUTHORITY	1514 UNION STREET, TAMPA, FL 33607–0000	70	2,649,850
HIALEAH HOUSING AUTHORITY	70 EAST 7TH STREET, HIALEAH, FL 33010–0000	70	3,708,880
CINCINNATI METROPOLITAN HOUSING AUTHORITY	16 WEST CENTRAL PARKWAY, CINCINNATI, OH 45210–0000.	70	2,460,510
SAN JOSE	505 WEST JULIAN STREET, SAN JOSE, CA 95110–0000.	70	4,765.535
Totals		1,651	72,431,000

FY 1993 SECTION 8 MOVING TO OPPORTUNITY FOR FAIR HOUSING DEMONSTRATION, RENTAL VOUCHER AND RENTAL CERTIFICATE PROGRAMS

Housing agency name	Housing agency address	Vouchers	Budget authority	Certificates	Budget authority	Housing counseling
BOSTON HOUSING AUTHORITY.	52 CHAUNCY STREET, BOSTON, MA 02111–0000.	188	$10,530,295	97	$5,162,885	$107,304
NEW YORK CITY HOUSING AUTHORITY.	250 BROADWAY, NEW YORK, NY 10007–0000.	188	10,670,625	97	5,225,420	107,304
HOUSING AUTHORITY OF BALTIMORE CITY.	417 E FAYETTE STREET, BALTIMORE, MD 21202–0000.	188	8,129,100	97	4,066,750	107,304
HOUSING AUTHORITY OF CITY OF LOS ANGELES.	2600 WILSHIRE BLVD., LOS ANGELES, CA 90057–0000.	188	11,393,170	0	0	70,783
CHICAGO HOUSING AUTHORITY.	626 W. JACKSON BLVD, CHICAGO, IL 60602–0000.	188	8,786,910	97	4,526,030	107,304
Totals		940	49,510,100	388	18,979,085	499,999

FY 1993 SECTION 8 VETERANS AFFAIRS SUPPORTIVE HOUSING AWARDS, RENTAL VOUCHER PROGRAM

Housing agency name	Housing agency address	Units	Budget authority
WEST HAVEN HOUSING AUTHORITY	15 GLADE STREET, WEST HAVEN, CT 06516–0000	30	$1,354,650
NEW YORK CITY HOUSING AUTHORITY	250 BROADWAY, NEW YORK, NY 10007–0000	50	2,233,000
PIERCE COUNTY HOUSING AUTHORITY	P. O. BOX 45410, TACOMA, WA 98445–0410	25	636,875
HOUSING AUTHORITY OF CITY OF LOS ANGELES	2600 WILSHIRE BLVD., LOS ANGELES, CA 90057–0000.	50	1,903,500
SAN ANTONIO HOUSING AUTHORITY	P O DRAWER 1300, SAN ANTONIO, TX 78295–0000	50	1,188,300
HAMPTON HOUSING & REDEVELOPMENT AUTHORITY.	P.O. BOX 280, HAMPTON, VA 23669–0000	25	589,500
DEKALB COUNTY HOUSING AUTHORITY	P O BOX 1627, DECATUR, GA 30031–0000	50	740,250
SALT LAKE COUNTY HOUSING AUTHORITY	1962 S. 200 E., SALT LAKE CITY, UT 84115–0000	25	633,925
METROPOLITAN DADE COUNTY SPECIAL HOUSING PROGRAMS.	111 N.W., FIRST ST., 26TH FLOOR MIAMI, FL 33128–1980.	50	1,949,250
CHICAGO HOUSING AUTHORITY	626 W. JACKSON BLVD, CHICAGO, IL 60602–0000	50	1,718,665
EXECUTIVE OFFICES OF COMMUNITY DEVELOPMENT.	100 CAMBRIDGE ST, BOSTON, MA 02202–0000	25	1,819,500
SAN BERNARDINO COUNTY HOUSING AUTHORITY	1053 NORTH D STREET, SAN BERNARDINO, CA 924.	25	729,955
SYRACUSE HOUSING AUTHORITY	516 BURT STREET, SYRACUSE, NY 13202–3999	25	544,250
TAMPA HOUSING AUTHORITY	1514 UNION ST, TAMPA, FL 33607–0000	50	1,401,975
ERIE COUNTY	C\O BELMONT SHELTER CORP., 5583 MAIN ST., WILLIAMSVILLE, NY 14221–0000.	25	490,250

FY 1993 SECTION 8 VETERANS AFFAIRS SUPPORTIVE HOUSING AWARDS, RENTAL VOUCHER PROGRAM—Continued

Housing agency name	Housing agency address	Units	Budget authority
INDIANAPOLIS HOUSING AUTHORITY	FIVE INDIANA SQ., SECOND FLOOR, INDIANAPOLIS, IN 46204.	35	1,192,955
Totals		590	19,137,830

FY 1993 SECTION 8 HOPE FOR ELDERLY INDEPENDENCE PROGRAM, RENTAL VOUCHER PROGRAM

Housing agency name	Housing agency address	Units	Budget authority	Grant amount
Eau Claire County Housing Authority	Courthouse, Room A180, 731 Oxford Avenue, Eau Claire, WI 54703.	30	$356,200	$202,500
Seattle Housing Authority	120 Sixth Avenue, Seattle, WA 98109–5003	150	4,319,250	1,000,000
Des Moines Public Housing Authority	1101 Crocker Street, Des Moines, IA 50309–1199	25	762,250	168,750
Housing Authority of the City of Everett	1401 Poplar, Everett, WA 98201–1899	100	2,753,500	675,000
White River Regional Housing Authority	P.O. Box 650, Melbourne, AR 72556–0650	150	1,972,000	1,000,000
New Jersey Department of Community Affairs	Division of Housing, Bureau of Housing Services, CN 051, Trenton, NJ 08625–0051.	150	6,437,900	997,786
Erie County PHA Consortium c/o Belmont Shelter Corp.	1195 Main Street, Buffalo, NY 14209–2196	150	3,000,750	1,000,000
Lynn Housing Authority	174 South Common Street, Lynn, MA 01905	50	1,745,000	337,500
Boulder County Housing Authority	2040 14th Street, Boulder, CO 80302	50	1,356,000	337,500
West Hartford Housing Authority	759 Farmington Avenue, West Hartford, CT 06119	70	2,018,800	469,000
Kentucky Housing Corporation	1231 Louisville Road, Frankfort, KY 40601–6191	80	1,219,600	407,605
Housing Authority of Alameda County	29800 Mission Boulevard, Hayward, CA 94544–6796.	150	5,085,750	904,160
Housing Authority of the City of Los Angeles	2600 Wilshire Boulevard, Los Angeles, CA 90057	31	1,081,930	1,000,000
Totals		1,186	32,107,930	8,499,801

[FR Doc. 96–14333 Filed 6–6–96; 8:45 am]
BILLING CODE 4210–33–P–M

[Docket No. FR–3778–N–88]

Office of the Assistant Secretary for Community Planning and Development; Federal Property Suitable as Facilities To Assist the Homeless

AGENCY: Office of the Assistant Secretary for Community Planning and Development, HUD.

ACTION: Notice.

SUMMARY: This Notice identifies unutilized, underutilized, excess, and surplus Federal property reviewed by HUD for suitability for possible use to assist the homeless.

FOR FURTHER INFORMATION CONTACT: Mark Johnston, room 7256, Department of Housing and Urban Development, 451 Seventh Street SW., Washington, DC 20410; telephone (202) 708–1226; TDD number for the hearing- and speech-impaired (202) 708–2565 (these telephone numbers are not toll-free), or call the toll-free Title V information line at 1–800–927–7588.

SUPPLEMENTARY INFORMATION: In accordance with 24 CFR part 581 and section 501 of the Stewart B. McKinney Homeless Assistance Act (42 U.S.C. 11411), as amended, HUD is publishing this Notice to identify Federal buildings and other real property that HUD has reviewed for suitability for use to assist the homeless. The properties were reviewed using information provided to HUD by Federal landholding agencies regarding unutilized and underutilized buildings and real property controlled by such agencies or by GSA regarding its inventory of excess or surplus Federal property. This Notice is also published in order to comply with the December 12, 1988 Court Order in *National Coalition for the Homeless* v. *Veterans Administration*, No. 88–2503–OG (D.D.C.).

Properties reviewed are listed in this Notice according to the following categories: Suitable/available, suitable/unavailable, suitable/to be excess, and unsuitable. The properties listed in the three suitable categories have been reviewed by the landholding agencies, and each agency has transmitted to HUD: (1) Its intention to make the property available for use to assist the homeless, (2) its intention to declare the property excess to the agency's needs, or (3) a statement of the reasons that the property cannot be declared excess or made available for use as facilities to assist the homeless.

Properties listed as suitable/available will be available exclusively for homeless use for a period of 60 days from the date of this Notice. Homeless assistance providers interested in any such property should sent a written expression of interest to HHS, addressed to Brian Rooney, Division of Property Management, Program Support Center, HHS, room 5B–41, 5600 Fishers Lane, Rockville, MD 20857; (301) 443–2265. (This is not a toll-free number.) HHS will mail to the interested provider an application packet, which will include instructions for completing the application. In order to maximize the opportunity to utilize a suitable property, providers should submit their written expressions of interest as soon as possible. For complete details concerning the processing of applications, the reader is encouraged to refer to the interim rule governing this program, 56 FR 23789 (May 24, 1991).

For properties listed as suitable/to be excess, that property may, if subsequently accepted as excess by GSA, be made available for use by the homeless in accordance with applicable law, subject to screening for other Federal use. At the appropriate time, HUD will publish the property in a Notice showing it as either suitable/available or suitable/unavailable.

For properties listed as suitable/unavailable, the landholding agency has decided that the property cannot be

declared excess or made available for use to assist the homeless, and the property will not be available.

Properties listed as unsuitable will not be made available for any other purpose for 20 days from the date of this Notice. Homeless assistance providers interested in a review by HUD of the determination of unsuitability should call the toll free information line at 1–800–927–7588 for detailed instructions or write a letter to Mark Johnston at the address listed at the beginning of this Notice. Included in the request for review should be the property address (including zip code), the date of publication in the Federal Register, the landholding agency, and the property number.

For more information regarding particular properties identified in this Notice (*i.e.*, acreage, floor plan, existing sanitary facilities, exact street address), providers should contact the appropriate landholding agencies at the following addresses: Army: Mr. Derrick Mitchell, CECPW–FP, U.S. Army Center for Public Works, 7701 Telegraph Road, Alexandria, VA 22310–3862; (703) 428–6083; Navy: Mr. John Kane, Deputy Division Director, Department of the Navy, Real Estate Operations, Naval Facilities Engineering Command, Code 241A, 200 Stoval Street, Alexandria, VA 22332–2300; (703) 325–0474; GSA: Mr. Brian K. Polly, Assistant Commissioner, General Services Administration, Office of Property Disposal, 18th and F Streets, NW., Washington, DC 20405; (202) 501–0052; (These are not toll-free numbers).

Dated: May 31, 1996.

Mark C. Gordon,

General Deputy Assistant Secretary for Community Planning and Development.

Title V, Federal Surplus Property Program
Federal Register Report For 06/07/96

Suitable/Available Properties

Building (by State)

Arkansas

Federal Building
129 North Main Street
Benton Co: Saline AR 72201–
Landholding Agency: GSA
Property Number: 549620005
Status: Excess
Comment: 1,900 sq. ft., most recent use—office, limitations due to potential historic significance.
GSA Number: 7–G–AR–550

Hawaii

Bldg. 594
Naval Station, Pearl Harbor
Pearl Harbor Co: Honolulu HI 96860–
Landholding Agency: Navy
Property Number: 779620011
Status: Unutilized
Comment: 1,300 sq. ft., most recent use—parking garage, off-site use only.

Bldgs. S233–S234, S241–S244
Naval Station, Pearl Harbor
Pearl Harbor Co: Honolulu HI 96860–
Landholding Agency: Navy
Property Number: 779620012
Status: Unutilized
Comment: 90 sq. ft. each, need repairs, most recent use—storage, off-site use only.

Bldgs S229–S232
Naval Station, Pearl Harbor
Pearl Harbor Co: Honolulu HI 96860–
Landholding Agency: Navy
Property Number: 779620013
Status: Unutilized
Comment: 180 sq. ft. each, need repairs, most recent use—storage, off-site use only.

Montana

Malstrom Communications Annex (Transmitter), 39 78th St., N.
Malstrom AFB Co: Cascade MT 59405–
Landholding Agency: GSA
Property Number: 189510023
Status: Excess
Comment: 1,966 sq. ft., limited utilities, needs roof replacement.
GSA Number: 7–D–MT–4240

USARC Bozeman Reserve Center
32 South Tracy Ave.
Bozeman Co: Gallatin MT
Landholding Agency: GSA
Property Number: 219420391
Status: Excess
Comment: 7,600 sq. ft., 2-story, most recent use—office, sound condition, presence of asbestos, on list of historic buildings.
GSA Number: 7–D–MT–0605

Nevada

Air Sound Suppresser
Nevada Air National Guard
1776 National Guard Way
Reno Co: Washoe NV 89502–4494
Landholding Agency: GSA
Property Number: 549620004
Status: Excess
Comment: 5,318 sq. ft., most recent use—aircraft engine noise sound suppresser/storage, off-site use only, substantial cost inherent in dismantle, teardown of structure.
GSA Number: 9–D–NV–507

New York

Building T–2313
Fort Drum
Fort Drum Co: Jefferson NY 13602–
Landholding Agency: Army
Property Number: 219620201
Status: Unutilized
Comment: 2,250 sq. ft, most recent use—Hqtrs. Bldg., needs repair, off-site use only.

Building T–2429
Fort Drum
Fort Drum Co: Jefferson NY 13602–
Landholding Agency: Army
Property Number: 219620202
Status: Unutilized
Comment: 4,340 sq. ft., most recent use—clinic, needs repair, off-site use only.

Building T–115
Fort Drum
Fort Drum Co: Jefferson NY 13602–
Landholding Agency: Army
Property Number: 219620203
Status: Unutilized
Comment: 4,120 sq. ft., most recent use—thrift shop; needs repair, off-site use only.

Building T–114
Fort Drum
Fort Drum Co: Jefferson NY 13602–
Landholding Agency: Army
Property Number: 219620204
Status: Unutilized
Comment: 3,717 sq. ft., most recent use—thrift ship; needs repair; off-site use only.

Building T–202
Fort Drum
Fort Drum Co: Jefferson NY 13602–
Landholding Agency: Army
Property Number: 219620205
Status: Unutilized
Comment: 3,537 sq. ft., most recent use—Admin. Gen. Purp.; needs repair, off-site use only.

Building T–345
Fort Drum
Fort Drum Co: Jefferson NY 13602–
Landholding Agency: Army
Property Number: 219620206
Status: Unutilized
Comment: 2,360 sq. ft., most recent use—storage, needs repair, off-site use only.

Building T–1007
Fort Drum
Fort Drum Co: Jefferson NY 13602–
Landholding Agency: Army
Property Number: 219620207
Status: Unutilized
Comment: 1,500 sq. ft., most recent use—Hdgtr. Bldg., needs repair, off-site use only.

Building T–325
Fort Drum
Fort Drum Co: Jefferson NY 13602–
Landholding Agency: Army
Property Number: 219620208
Status: Unutilized
Comment: 2,360 sq. ft., most recent use—storage, needs repair, off-site use only.

Building T–349
Fort Drum
Fort Drum Co: Jefferson NY 13602–
Landholding Agency: Army
Property Number: 219620209
Status: Unutilized
Comment: 2,360 sq. ft., most recent use—dining facility, needs repair, off-site use only.

Building T–355
Fort Drum
Fort Drum Co: Jefferson NY 13602–
Landholding Agency: Army
Property Number: 219620210
Status: Unutilized
Comment: 2,360 sq. ft., most recent use—storehouse, needs repair, off-site use only.

Building T–425
Fort Drum
Fort Drum Co: Jefferson NY 13602–
Landholding Agency: Army
Property Number: 219620211
Status: Unutilized
Comment: 2,360 sq. ft., most recent use—storehouse, needs repair, off-site use only.

Building T–449
Fort Drum
Fort Drum Co: Jefferson NY 13602–
Landholding Agency: Army
Property Number: 219620212
Status: Unutilized

Comment: 2,360 sq. ft., most recent use—storehouse, needs repairs, off-site use only.

Building T–455
Fort Drum
Fort Drum Co: Jefferson NY 13602–
Landholding Agency: Army
Property Number: 219620213
Status: Unutilized
Comment: 2,360 sq. ft., most recent use—storehouse, needs repair, off-site use only.

Building T–332
Fort Drum
Fort Drum Co: Jefferson NY 13602–
Landholding Agency: Army
Property Number: 219620214
Status: Unutilized
Comment: 1,144 sq. ft., most recent use—Hqtrs. Bldg., needs repair off-site use only.

Building T–820
Fort Drum
Fort Drum Co: Jefferson NY 13602–
Landholding Agency: Army
Property Number: 219620215
Status: Unutilized
Comment: 2,663 sq. ft., most recent use—storehouse, needs repair off-site use only.

Building T–829
Fort Drum
Fort Drum Co: Jefferson NY 13602–
Landholding Agency: Army
Property Number: 219620216
Status: Unutilized
Comment: 2,400 sq. ft., most recent use—storehouse, needs repair off-site use only.

Building T–2194
Fort Drum
Fort Drum Co: Jefferson NY 13602–
Landholding Agency: Army
Property Number: 219620217
Status: Unutilized
Comment: 2,573 sq. ft., most recent use—storage, needs repair off-site use only.

Building T–2193
Fort Drum
Fort Drum Co: Jefferson NY 13602–
Landholding Agency: Army
Property Number: 219620218
Status: Unutilized
Comment: 520 sq. ft., most recent use—storage, needs repair off-site use only.

Building T–2542
Fort Drum
Fort Drum Co: Jefferson NY 13602–
Landholding Agency: Army
Property Number: 219620219
Status: Unutilized
Comment: 1,795 sq. ft., most recent use—storage, needs repair off-site use only.

Building T–333
Fort Drum
Fort Drum Co: Jefferson NY 13602–
Landholding Agency: Army
Property Number: 219620220
Status: Unutilized
Comment: 1,144 sq. ft., most recent use—Hqtrs. Bldg., needs repair off-site use only.

Building T–414
Fort Drum
Fort Drum Co: Jefferson NY 13602–
Landholding Agency: Army
Property Number: 219620221
Status: Unutilized
Comment: 3,663 sq. ft., most recent use—Hqtrs. Bldg., needs repair off-site use only.

Building T–602
Fort Drum
Fort Drum Co: Jefferson NY 13602–
Landholding Agency: Army
Property Number: 219620222
Status: Unutilized
Comment: 1,600 sq. ft., most recent use—Co. Hqtrs. Bldg., needs repair off-site use only.

Building T–334
Fort Drum
Fort Drum Co: Jefferson NY 13602–
Landholding Agency: Army
Property Number: 219620223
Status: Unutilized
Comment: 1,144 sq. ft., most recent use—Hqtrs. Bldg., needs repair off-site use only.

Building T–786
Fort Drum
Fort Drum Co: Jefferson NY 13602–
Landholding Agency: Army
Property Number: 219620224
Status: Unutilized
Comment: 4,720 sq. ft., most recent use—AT Enl. Barracks, needs repair, off-site use only.

Building T–428
Fort Drum
Fort Drum Co: Jefferson NY 13602–
Landholding Agency: Army
Property Number: 219620225
Status: Unutilized
Comment: 4,720 sq. ft., most recent use—AT Enl. Barracks, needs repair off-site use only.

Building T–427
Fort Drum
Fort Drum Co: Jefferson NY 13602–
Landholding Agency: Army
Property Number: 219620226
Status: Unutilized
Comment: 4,720 sq. ft., most recent use—AT Enl. Barracks, needs repair off-site use only.

Building T–2400
Fort Drum
Fort Drum Co: Jefferson NY 13602–
Landholding Agency: Army
Property Number: 219620227
Status: Unutilized
Comment: 10,335 sq. ft., most recent use—storage, needs repair off-site use only.

Building T–2225
Fort Drum
Fort Drum Co: Jefferson NY 13602–
Landholding Agency: Army
Property Number: 219620228
Status: Unutilized
Comment: 2,275 sq. ft., most recent use—storage, needs repair off-site use only.

Building T–2418
Fort Drum
Fort Drum Co: Jefferson NY 13602–
Landholding Agency: Army
Property Number: 219620229
Status: Unutilized
Comment: 3,537 sq. ft., most recent use—storage, needs repair off-site use only.

Building T–754
Fort Drum
Fort Drum Co: Jefferson NY 13602–
Landholding Agency: Army
Property Number: 219620230
Status: Unutilized
Comment: 2,250 sq. ft., most recent use—storage, needs repair off-site use only.

Building T–625
Fort Drum
Fort Drum Co: Jefferson NY 13602–
Landholding Agency: Army
Property Number: 219620231
Status: Unutilized
Comment: 2,360 sq. ft., most recent use—storage, needs repair off-site use only.

Oklahoma

U.S. Federal Building
103 S. Hudson
Altus Co: Jackson OK 73521–
Landholding Agency: GSA
Property Number: 549620006
Status: Excess
Comment: 9860 gross sq. ft. with 25 outside parking spaces, most recent use—govt. offices, needs some repair.
GSA Number: 7–G–OK–558

Rhode Island

Parcel 6 (7 Bldgs.)
Naval Construction Battalion Center
Davisville Co: Kent RI 02854–1161
Landholding Agency: Navy
Property Number: 779620031
Status: Excess
Comment: 1 story, presence of asbestos, on 6.9 acres, includes gen. warehouses, heat plant, administration, storage.

Texas

5 Bldgs., Family Quarters
Hayes Housing Complex, Fort Bliss
El Paso Co: El Paso TX 79916–
Location: 2126A/B, 2148A/B, 2218A/B, 2230A/B, 2245A/B
Landholding Agency: Army
Property Number: 219620233
Status: Unutilized
Comment: 769 sq. ft., needs rehab, possible asbestos/lead paint, off-site use only.

12 Bldgs., Family Quarters
Hayes Housing Complex, Fort Bliss
El Paso Co: El Paso TX 79916–
Location: 2106A/B, 2144A/B, 2156A/B, 2164A/B, 2172A/B, 2194A/B, 2220A/B, 2228A/B, 2234A/B, 2239A/B, 2244A/B, 2214A/B
Landholding Agency: Army
Property Number: 219620234
Status: Unutilized
Comment: 916 sq. ft., needs rehab, possible asbestos/lead paint, off-site use only.

11 Bldgs., Family Quarters
Hayes Housing Complex, Fort Bliss
El Paso Co: El Paso TX 79916–
Location: 2105A/B, 2127A/B, 2137A/B, 2191A/B, 2205A/B, 2206A/B, 2216A/B, 2219A/B, 2231A/B, 2241A/B, 2250A/B
Landholding Agency: Army
Property Number: 219620235
Status: Unutilized
Comment: 896 sq. ft., needs rehab, possible asbestos/lead paint, off-site use only.

17 Bldgs., Family Quarters
Hayes Housing Complex, Fort Bliss
El Paso Co: El Paso TX 79916–
Location: 2129A/B, 2147A/B, 2150A/B, 2153A/B, 2158A/B, 2161A/B, 2167A/B, 2173A/B, 2179A/B, 2183A/B, 2186A/B, 2193A/B, 2209A/B, 2217A/B, 2227A/B, 2237A/B, 2249A/B
Landholding Agency: Army
Property Number: 219620236
Status: Unutilized

Comment: 911 sq. ft., needs rehab, possible asbestos/ lead paint, off-site use only.

35 Bldgs., Family Quarters
Hayes Housing Complex, Fort Bliss
El Paso C: El Paso TX 79916–
Location: 2108, 2109, 2111, 2113, 2119, 2124, 2128, 2134, 2140, 2142, 2145, 2151, 2162, 2163, 2168, 2171, 2174, 2176, 2182, 2184, 2188, 2192, 2195, 2202, 2203, 2212, 2223, 2224, 2226, 2232, 2238, 2242, 2246, 2132, 2152
Landholding Agency: Army
Property Number: 219620237
Status: Unutilized
Comment: 913 sq. ft., needs rehab, possible asbestos/lead paint, off-site use only.

Land (by State)

Rhode Island

Portion of Parcel 4
Naval Construction Battalion Center
Davisville Co: Kent RI 02854–1161
Landholding Agency: Navy
Property Number: 779310031
Status: Excess
Comment: Approximately 4 acres.

Unsuitable Properties

Buildings (by State)

Building M–0206
Louisiana Army Ammunition Plant
Doyline 71023–
Landholding Agency: Army
Property Number: 219620138
Status: Unutilized
Reason: Within 2000 ft. of flammable or explosive material; Secured Area.

California

Bldg. 31035
Naval Air Weapons Station
China Lake Co: San Bernardino CA 93555–6001
Landholding Agency: Navy
Property Number: 779620036
Status: Excess
Reason: Within 2000 ft. of flammable or explosive material; Secured Area.

Hawaii

Bldg. 98
Pearl Harbor Naval Shipyard
Pearl Harbor Co: Honolulu HI 96860–
Landholding Agency: Navy
Property Number: 779620032
Status: Excess
Reason: Extensive deterioration.

Bldg. 310
Naval Magazine Lualualei
Lualualei Co: Oahu HI 96792–
Landholding Agency: Navy
Property Number: 779620033
Status: Unutilized
Reason: Extensive deterioration.

Bldg. Q339
Naval Magazine Lualualei
Lualualei Co: Oahu HI 96792–
Landholding Agency: Navy
Property Number: 779620034
Status: Unutilized
Reason: Extensive deterioration.

Bldg. 340
Naval Magazine Lualualei
Lualualei Co: Oahu HI 96792–
Landholding Agency: Navy
Property Number: 779620035
Status: Unutilized
Reason: Extensive deterioration.

Louisiana

Building T–0419
Louisiana Army Ammunition Plant
Doyline Co: Webster LA 71023–
Landholding Agency: Army
Property Number: 219620001
Status: Unutilized
Reason: Within 2000 ft. of flammable or explosive material; Secured Area.

Building K–1119
Louisiana Army Ammunition Plant
Doyline Co: Webster LA 71023–
Landholding Agency: Army
Property Number: 219620002
Status: Unutilized
Reason: Within 2000 ft. of flammable or explosive material; Secured Area.

Building T–0407
Louisiana Army Ammunition Plant
Doyline Co: Webster LA 71023–
Landholding Agency: Army
Property Number: 219620003
Status: Unutilized
Reason: Within 2000 ft. of flammable or explosive material; Secured Area.

Building T–0401
Louisiana Army Ammunition Plant
Doyline Co: Webster LA 71023–
Landholding Agency: Army
Property Number: 219620004
Status: Unutilized
Reason: Within 2000 ft. of flammable or explosive material; Secured Area.

Building B–1479
Louisiana Army Ammunition Plant
Doyline Co: Webster LA 71023–
Landholding Agency: Army
Property Number: 219620005
Status: Unutilized
Reason: Within 2000 ft. of flammable or explosive material; Secured Area.

Building A–0150
Louisiana Army Ammunition Plant
Doyline Co: Webster LA 71023–
Landholding Agency: Army
Property Number: 219620006
Status: Unutilized
Reason: Within 2000 ft. of flammable or explosive material; Secured Area.

Building A–0139
Louisiana Army Ammunition Plant
Doyline Co: Webster LA 71023–
Landholding Agency: Army
Property Number: 219620007
Status: Unutilized
Reason: Within 2000 ft. of flammable or explosive material; Secured Area.

Building M–2109
Louisiana Army Ammunition Plant
Doyline Co: Webster LA 71023–
Landholding Agency: Army
Property Number: 219620008
Status: Unutilized
Reason: Within 2000 ft. of flammable or explosive material; Secured Area.

Building M–2108
Louisiana Army Ammunition Plant
Doyline Co: Webster LA 71023–
Landholding Agency: Army
Property Number: 219620009
Status: Unutilized
Reason: Within 2000 ft. of flammable or explosive material; Secured Area.

Building M–2107
Louisiana Army Ammunition Plant
Doyline Co: Webster LA 71023–
Landholding Agency: Army
Property Number: 219620010
Status: Unutilized
Reason: Within 2000 ft. of flammable or explosive material; Secured Area.

Building J–1009
Louisiana Army Ammunition Plant
Doyline Co: Webster LA 71023–
Landholding Agency: Army
Property Number: 219620011
Status: Unutilized
Reason: Within 2000 ft. of flammable or explosive material; Secured Area.

Building J–1004
Louisiana Army Ammunition Plant
Doyline Co: Webster LA 71023–
Landholding Agency: Army
Property Number: 219620012
Status: Unutilized
Reason: Within 2000 ft. of flammable or explosive material; Secured Area.

Building G–0811
Louisiana Army Ammunition Plant
Doyline Co: Webster LA 71023–
Landholding Agency: Army
Property Number: 219620013
Status: Unutilized
Reason: Within 2000 ft. of flammable or explosive material; Secured Area.

Building G–0806
Louisiana Army Ammunition Plant
Doyline Co: Webster LA 71023–
Landholding Agency: Army
Property Number: 219620014
Status: Unutilized
Reason: Within 2000 ft. of flammable or explosive material; Secured Area.

Building G–0807
Louisiana Army Ammunition Plant
Doyline Co: Webster LA 71023–
Landholding Agency: Army
Property Number: 219620015
Status: Unutilized
Reason: Within 2000 ft. of flammable or explosive material; Secured Area.

Building G–0809
Louisiana Army Ammunition Plant
Doyline Co: Webster LA 71023–
Landholding Agency: Army
Property Number: 219620016
Status: Unutilized
Reason: Within 2000 ft. of flammable or explosive material; Secured Area.

Building T–0410
Louisiana Army Ammunition Plant
Doyline Co: Webster LA 71023–
Landholding Agency: Army
Property Number: 219620017
Status: Unutilized
Reason: Within 2000 ft. of flammable or explosive material; Secured Area.

Building K–1113
Louisiana Army Ammunition Plant
Doyline Co: Webster LA 71023–
Landholding Agency: Army
Property Number: 219620018
Status: Unutilized
Reason: Within 2000 ft. of flammable or explosive material; Secured Area.

Buildings J–1019, K–1124,
Louisiana Army Ammunition Plant
Doyline Co: Webster LA 71023–
Location: S–1649, S–1650
Landholding Agency: Army
Property Number: 219620019
Status: Unutilized
Reason: Within 2000 ft. of flammable or explosive material; Secured Area.

Building C–1368
Louisiana Army Ammunition Plant
Doyline Co: Webster LA 71023–
Landholding Agency: Army
Property Number: 219620020
Status: Unutilized
Reason: Within 2000 ft. of flammable or explosive material; Secured Area.

Building D–1260
Louisiana Army Ammunition Plant
Doyline Co: Webster LA 71023–
Landholding Agency: Army
Property Number: 219620021
Status: Unutilized
Reason: Within 2000 ft. of flammable or explosive material; Secured Area.

Building C–1369
Louisiana Army Ammunition Plant
Doyline Co: Webster LA 71023–
Landholding Agency: Army
Property Number: 219620022
Status: Unutilized
Reason: Within 2000 ft. of flammable or explosive material; Secured Area.

Building G–0823
Louisiana Army Ammunition Plant
Doyline Co: Webster LA 71023–
Landholding Agency: Army
Property Number: 219620023
Status: Unutilized
Reason: Within 2000 ft. of flammable or explosive material; Secured Area.

Building E–1744
Louisiana Army Ammunition Plant
Doyline Co: Webster LA 71023–
Landholding Agency: Army
Property Number: 219620024
Status: Unutilized
Reason: Within 2000 ft. of flammable or explosive material; Secured Area.

Building B–1414
Louisiana Army Ammunition Plant
Doyline Co: Webster LA 71023–
Landholding Agency: Army
Property Number: 219620025
Status: Unutilized
Reason: Within 2000 ft. of flammable or explosive material; Secured Area.

Building C–1340
Louisiana Army Ammunition Plant
Doyline Co: Webster LA 71023–
Landholding Agency: Army
Property Number: 219620026
Status: Unutilized
Reason: Within 2000 ft. of flammable or explosive material; Secured Area.

Building X–5103
Louisiana Army Ammunition Plant
Doyline Co: Webster LA 71023–
Landholding Agency: Army
Property Number: 219620027
Status: Unutilized
Reason: Within 2000 ft. of flammable or explosive material; Secured Area.

Building E–1705
Louisiana Army Ammunition Plant
Doyline Co: Webster LA 71023–
Landholding Agency: Army
Property Number: 219620028
Status: Unutilized
Reason: Within 2000 ft. of flammable or explosive material; Secured Area.

Building D–1234
Louisiana Army Ammunition Plant
Doyline Co: Webster LA 71023–
Landholding Agency: Army
Property Number: 219620029
Status: Unutilized
Reason: Within 2000 ft. of flammable or explosive material; Secured Area.

Building H–0915
Louisiana Army Ammunition Plant
Doyline Co: Webster LA 71023–
Landholding Agency: Army
Property Number: 219620030
Status: Unutilized
Reason: Within 2000 ft. of flammable or explosive material; Secured Area.

Building SR–026
Louisiana Army Ammunition Plant
Doyline Co: Webster LA 71023–
Landholding Agency: Army
Property Number: 219620031
Status: Unutilized
Reason: Within 2000 ft. of flammable or explosive material; Secured Area.

Building S–1630
Louisiana Army Ammunition Plant
Doyline Co: Webster LA 71023–
Landholding Agency: Army
Property Number: 219620032
Status: Unutilized
Reason: Within 2000 ft. of flammable or explosive material; Secured Area.

Building J–1003
Louisiana Army Ammunition Plant
Doyline Co: Webster LA 71023–
Landholding Agency: Army
Property Number: 219620033
Status: Unutilized
Reason: Within 2000 ft. of flammable or explosive material; Secured Area.

Building N–1800
Louisiana Army Ammunition Plant
Doyline Co: Webster LA 71023—
Landholding Agency: Army
Property Number: 219620034
Status: Unutilized
Reason: Within 2000 ft. of flammable or explosive material; Secured Area.

Building X–5072
Louisiana Army Ammunition Plant
Doyline Co: Webster LA 71023—
Landholding Agency: Army
Property Number: 219620035
Status: Unutilized
Reason: Within 2000 ft. of flammable or explosive material; Secured Area.

Building J–1016
Louisiana Army Ammunition Plant
Doyline Co: Webster LA 71023—
Landholding Agency: Army
Property Number: 219620036
Status: Unutilized
Reason: Within 2000 ft. of flammable or explosive material; Secured Area.

Building O–1500
Louisiana Army Ammunition Plant
Doyline Co: Webster LA 71023—
Landholding Agency: Army
Property Number: 219620037
Status: Unutilized
Reason: Within 2000 ft. of flammable or explosive material; Secured Area.

Building X–5000
Louisiana Army Ammunition Plant
Doyline Co: Webster LA 71023—
Landholding Agency: Army
Property Number: 219620038
Status: Unutilized
Reason: Within 2000 ft. of flammable or explosive material; Secured Area.

Building O–1501
Louisiana Army Ammunition Plant
Doyline Co: Webster LA 71023—
Landholding Agency: Army
Property Number: 219620039
Status: Unutilized
Reason: Within 2000 ft. of flammable or explosive material; Secured Area.

Building G–0812
Louisiana Army Ammunition Plant
Doyline Co: Webster LA 71023—Landholding Agency: Army
Property Number: 219620040
Status: Unutilized
Reason: Within 2000 ft. of flammable or explosive material; Secured Area.

Building H–0913
Louisiana Army Ammunition Plant
Doyline Co: Webster LA 71023—
Landholding Agency: Army
Property Number: 219620041
Status: Unutilized
Reason: Within 2000 ft. of flammable or explosive material; Secured Area.

Building D–1218
Louisiana Army Ammunition Plant
Doyline Co: Webster LA 71023—
Landholding Agency: Army
Property Number: 219620042
Status: Unutilized
Reason: Within 2000 ft. of flammable or explosive material; Secured Area.

Building D–1216
Louisiana Army Ammunition Plant
Doyline Co: Webster LA 71023—
Landholding Agency: Army
Property Number: 219620043
Status: Unutilized
Reason: Within 2000 ft. of flammable or explosive material; Secured Area.

Building D–1213
Louisiana Army Ammunition Plant
Doyline Co: Webster LA 71023—
Landholding Agency: Army
Property Number: 219620044
Status: Unutilized
Reason: Within 2000 ft. of flammable or explosive material; Secured Area.

Building D–1211
Louisiana Army Ammunition Plant
Doyline Co: Webster LA 71023—
Landholding Agency: Army
Property Number: 219620045
Status: Unutilized
Reason: Within 2000 ft. of flammable or explosive material; Secured Area.

Building D–1209
Louisiana Army Ammunition Plant
Doyline Co: Webster LA 71023—
Landholding Agency: Army
Property Number: 219620046

Status: Unutilized
Reason: Within 2000 ft. of flammable or explosive material; Secured Area.

Building D–1208
Louisiana Army Ammunition Plant
Doyline Co: Webster LA 71023—
Landholding Agency: Army
Property Number: 219620047
Status: Unutilized
Reason: Within 2000 ft. of flammable or explosive material; Secured Area.

Building C–1327
Louisiana Army Ammunition Plant
Doyline Co: Webster LA 71023—
Landholding Agency: Army
Property Number: 219620048
Status: Unutilized
Reason: Within 2000 ft. of flammable or explosive material; Secured Area.

Building C–1326
Louisiana Army Ammunition Plant
Doyline Co: Webster LA 71023—
Landholding Agency: Army
Property Number: 219620049
Status: Unutilized
Reason: Within 2000 ft. of flammable or explosive material; Secured Area.

Building C–1324
Louisiana Army Ammunition Plant
Doyline Co: Webster LA 71023—
Landholding Agency: Army
Property Number: 219620050
Status: Unutilized
Reason: Secured Area; Within 2000 ft. of flammable or explosive material.

Building C–1339
Louisiana Army Ammunition Plant
Doyline Co: Webster LA 71023—
Landholding Agency: Army
Property Number: 219620051
Status: Unutilized
Reason: Within 2000 ft. of flammable or explosive material; Secured Area.

Building C–1336
Louisiana Army Ammunition Plant
Doyline Co: Webster LA 71023—
Landholding Agency: Army
Property Number: 219620052
Status: Unutilized
Reason: Within 2000 ft. of flammable or explosive material; Secured Area.

Building C–1320
Louisiana Army Ammunition Plant
Doyline Co: Webster LA 71023—
Landholding Agency: Army
Property Number: 219620053
Status: Unutilized
Reason: Within 2000 ft. of flammable or explosive material; Secured Area.

Building K–1116
Louisiana Army Ammunition Plant
Doyline Co: Webster LA 71023–
Landholding Agency: Army
Property Number: 219620054
Status: Unutilized
Reason: Within 2000 ft. of flammable or explosive material; Secured Area.

Building K–1118
Louisiana Army Ammunition Plant
Doyline Co: Webster LA 71023–
Landholding Agency: Army
Property Number: 219620055
Status: Unutilized
Reason: Within 2000 ft. of flammable or explosive material; Secured Area.

Building K–1113
Louisiana Army Ammunition Plant
Doyline Co: Webster LA 71023–
Landholding Agency: Army
Property Number: 219620056
Status: Unutilized
Reason: Within 2000 ft. of flammable or explosive material; Secured Area.

Building S–1628
Louisiana Army Ammunition Plant
Doyline Co: Webster LA 71023–
Landholding Agency: Army
Property Number: 219620057
Status: Unutilized
Reason: Within 2000 ft. of flammable or explosive material; Secured Area.

Building D–1230
Louisiana Army Ammunition Plant
Doyline Co: Webster LA 71023–
Landholding Agency: Army
Property Number: 219620058
Status: Unutilized
Reason: Within 2000 ft. of flammable or explosive material; Secured Area.

Building D–1214
Louisiana Army Ammunition Plant
Doyline Co: Webster LA 71023–
Landholding Agency: Army
Property Number: 219620059
Status: Unutilized
Reason: Within 2000 ft. of flammable or explosive material; Secured Area.

Building D–1229
Louisiana Army Ammunition Plant
Doyline Co: Webster LA 71023–
Landholding Agency: Army
Property Number: 219620060
Status: Unutilized
Reason: Within 2000 ft. of flammable or explosive material; Secured Area.

Building E–1713
Louisiana Army Ammunition Plant
Doyline Co: Webster LA 71023–
Landholding Agency: Army
Property Number: 219620061
Status: Unutilized
Reason: Within 2000 ft. of flammable or explosive material; Secured Area.

Building E–1711
Louisiana Army Ammunition Plant
Doyline Co: Webster LA 71023–
Landholding Agency: Army
Property Number: 219620062
Status: Unutilized
Reason: Within 2000 ft. of flammable or explosive material; Secured Area.

Building E–1722
Louisiana Army Ammunition Plant
Doyline Co: Webster LA 71023–
Landholding Agency: Army
Property Number: 219620063
Status: Unutilized
Reason: Within 2000 ft. of flammable or explosive material; Secured Area.

Building E–1721
Louisiana Army Ammunition Plant
Doyline Co: Webster LA 71023–
Landholding Agency: Army
Property Number: 219620064
Status: Unutilized
Reason: Within 2000 ft. of flammable or explosive material; Secured Area.

Building E–1718
Louisiana Army Ammunition Plant
Doyline Co: Webster LA 71023–
Landholding Agency: Army
Property Number: 219620065
Status: Unutilized
Reason: Within 2000 ft. of flammable or explosive material; Secured Area.

Building E–1714
Louisiana Army Ammunition Plant
Doyline Co: Webster LA 71023–
Landholding Agency: Army
Property Number: 219620066
Status: Unutilized
Reason: Within 2000 ft. of flammable or explosive material; Secured Area.

Building D–1225
Louisiana Army Ammunition Plant
Doyline Co: Webster LA 71023–
Landholding Agency: Army
Property Number: 219620067
Status: Unutilized
Reason: Within 2000 ft. of flammable or explosive material; Secured Area.

Building C–1316
Louisiana Army Ammunition Plant
Doyline Co: Webster LA 71023–
Landholding Agency: Army
Property Number: 219620068
Status: Unutilized
Reason: Within 2000 ft. of flammable or explosive material; Secured Area.

Building E–1735
Louisiana Army Ammunition Plant
Doyline Co: Webster LA 71023–
Landholding Agency: Army
Property Number: 219620069
Status: Unutilized
Reason: Within 2000 ft. of flammable or explosive material; Secured Area.

Building C–1318
Louisiana Army Ammunition Plant
Doyline Co: Webster LA 71023–
Landholding Agency: Army
Property Number: 219620070
Status: Unutilized
Reason: Within 2000 ft. of flammable or explosive material; Secured Area.

Building C–1328
Louisiana Army Ammunition Plant
Doyline Co: Webster LA 71023–
Landholding Agency: Army
Property Number: 219620071
Status: Unutilized
Reason: Within 2000 ft. of flammable or explosive material; Secured Area.

Building E–1740
Louisiana Army Ammunition Plant
Doyline Co: Webster LA 71023–
Landholding Agency: Army
Property Number: 219620072
Status: Unutilized
Reason: Within 2000 ft. of flammable or explosive material; Secured Area.

Building C–1312
Louisiana Army Ammunition Plant
Doyline Co: Webster LA 71023–
Landholding Agency: Army
Property Number: 219620073
Status: Unutilized
Reason: Within 2000 ft. of flammable or explosive material; Secured Area.

Building C–1311
Louisiana Army Ammunition Plant
Doyline Co: Webster LA 71023–
Landholding Agency: Army

Property Number: 219620074
Status: Unutilized
Reason: Within 2000 ft. of flammable or explosive material; Secured Area.

Building C–1308
Louisiana Army Ammunition Plant
Doyline Co: Webster LA 71023–
Landholding Agency: Army
Property Number: 219620075
Status: Unutilized
Reason: Within 2000 ft. of flammable or explosive material; Secured Area.

Building C–1315
Louisiana Army Ammunition Plant
Doyline Co: Webster LA 71023–
Landholding Agency: Army
Property Number: 219620076
Status: Unutilized
Reason: Within 2000 ft. of flammable or explosive material; Secured Area.

Building T–415
Louisiana Army Ammunition Plant
Doyline Co: Webster LA 71023–
Landholding Agency: Army
Property Number: 21962077
Status: Unutilized
Reason: Within 2000 ft. of flammable or explosive material; Secured Area.

Building S–1645
Louisiana Army Ammunition Plant
Doyline Co: Webster LA 71023–
Landholding Agency: Army
Property Number: 219620078
Status: Unutilized
Reason: Within 2000 ft. of flammable or explosive material; Secured Area.

Building G–821
Louisiana Army Ammunition Plant
Doyline Co: Webster LA 71023–
Landholding Agency: Army
Property Number: 219620079
Status: Unutilized
Reason: Within 2000 ft. of flammable or explosive material; Secured Area.

Building B–1477
Louisiana Army Ammunition Plant
Doyline Co: Webster LA 71023–
Landholding Agency: Army
Property Number: 219620080
Status: Unutilized
Reason: Within 2000 ft. of flammable or explosive material; Secured Area.

Building K–1123
Louisiana Army Ammunition Plant
Doyline Co: Webster LA 71023–
Landholding Agency: Army
Property Number: 219620081
Status: Unutilized
Reason: Within 2000 ft. of flammable or explosive material; Secured Area.

Building M–2106
Louisiana Army Ammunition Plant
Doyline Co: Webster LA 71023–
Landholding Agency: Army
Property Number: 219620082
Status: Unutilized
Reason: Within 2000 ft. of flammable or explosive material; Secured Area.

Building D–1232
Louisiana Army Ammunition Plant
Doyline Co: Webster LA 71023–
Landholding Agency: Army
Property Number: 219620083
Status: Unutilized
Reason: Within 2000 ft. of flammable or explosive material; Secured Area.

Building M–0634
Louisiana Army Ammunition Plant
Doyline Co: Webster LA 71023–
Landholding Agency: Army
Property Number: 219620084
Status: Unutilized
Reason: Within 2000 ft. of flammable or explosive material; Secured Area.

Building M–0633
Louisiana Army Ammunition Plant
Doyline Co: Webster LA 71023–
Landholding Agency: Army
Property Number: 219620085
Status: Unutilized
Reason: Within 2000 ft. of flammable or explosive material; Secured Area.

Building M–0632
Louisiana Army Ammunition Plant
Doyline Co: Webster LA 71023–
Landholding Agency: Army
Property Number: 219620086
Status: Unutilized
Reason: Within 2000 ft. of flammable or explosive material; Secured Area.

Building K–1107
Louisiana Army Ammunition Plant
Doyline Co: Webster LA 71023–
Landholding Agency: Army
Property Number: 219620087
Status: Unutilized
Reason: Within 2000 ft. of flammable or explosive material; Secured Area.

Building B–1427
Louisiana Army Ammunition Plant
Doyline Co: Webster LA 71023–
Landholding Agency: Army
Property Number: 219620088
Status: Unutilized
Reason: Within 2000 ft. of flammable or explosive material; Secured Area.

Building B–1473
Louisiana Army Ammunition Plant
Doyline Co: Webster LA 71023–
Landholding Agency: Army
Property Number: 219620089
Status: Unutilized
Reason: Within 2000 ft. of flammable or explosive material; Secured Area.

Building B–1442
Louisiana Army Ammunition Plant
Doyline Co: Webster LA 71023–
Landholding Agency: Army
Property Number: 219620090
Status: Unutilized
Reason: Within 2000 ft. of flammable or explosive material; Secured Area.

Building B–1474
Louisiana Army Ammunition Plant
Doyline Co: Webster LA 71023–
Landholding Agency: Army
Property Number: 219620091
Status: Unutilized
Reason: Within 2000 ft. of flammable or explosive material; Secured Area.

Building M–0635
Louisiana Army Ammunition Plant
Doyline Co: Webster LA 71023–
Landholding Agency: Army
Property Number: 219620092
Status: Unutilized
Reason: Within 2000 ft. of flammable or explosive material; Secured Area.

Building K–1108
Louisiana Army Ammunition Plant
Doyline Co: Webster LA 71023–
Landholding Agency: Army
Property Number: 219620093
Status: Unutilized
Reason: Within 2000 ft. of flammable or explosive material; Secured Area.

Building M–0205
Louisiana Army Ammunition Plant
Doyline Co: Webster LA 71023–
Landholding Agency: Army
Property Number: 219620094
Status: Unutilized
Reason: Within 2000 ft. of flammable or explosive material; Secured Area.

Building M–0203
Louisiana Army Ammunition Plant
Doyline Co: Webster LA 71023–
Landholding Agency: Army
Property Number: 219620095
Status: Unutilized
Reason: Within 2000 ft. of flammable or explosive material; Secured Area.

Building M–0204
Louisiana Army Ammunition Plant
Doyline Co: Webster LA 71023–
Landholding Agency: Army
Property Number: 219620096
Status: Unutilized
Reason: Within 2000 ft. of flammable or explosive material; Secured Area.

Building S–1607
Louisiana Army Ammunition Plant
Doyline Co: Webster LA 71023–
Landholding Agency: Army
Property Number: 219620097
Status: Unutilized
Reason: Within 2000 ft. of flammable or explosive material; Secured Area.

Building C–1304
Louisiana Army Ammunition Plant
Doyline Co: Webster LA 71023–
Landholding Agency: Army
Property Number: 219620098
Status: Unutilized
Reason: Within 2000 ft. of flammable or explosive material; Secured Area.

Building Y–2639
Louisiana Army Ammunition Plant
Doyline Co: Webster LA 71023–
Landholding Agency: Army
Property Number: 219620099
Status: Unutilized
Reason: Within 2000 ft. of flammable or explosive material; Secured Area.

Building M–0649
Louisiana Army Ammunition Plant
Doyline Co: Webster LA 71023–
Landholding Agency: Army
Property Number: 219620100
Status: Unutilized
Reason: Within 2000 ft. of flammable or explosive material; Secured Area.

Building M–0648
Louisiana Army Ammunition Plant
Doyline Co: Webster LA 71023–
Landholding Agency: Army
Property Number: 219620101
Status: Unutilized
Reason: Within 2000 ft. of flammable or explosive material; Secured Area.

Building M–0647
Louisiana Army Ammunition Plant

Doyline Co: Webster LA 71023–
Landholding Agency: Army
Property Number: 219620102
Status: Unutilized
Reason: Within 2000 ft. of flammable or explosive material; Secured Area.

Building M–0645
Louisiana Army Ammunition Plant
Doyline Co: Webster LA 71023–
Landholding Agency: Army
Property Number: 219620103
Status: Unutilized
Reason: Within 2000 ft. of flammable or explosive material; Secured Area.

Building M–0646
Louisiana Army Ammunition Plant
Doyline Co: Webster LA 71023–
Landholding Agency: Army
Property Number: 219620104
Status: Unutilized
Reason: Within 2000 ft. of flammable or explosive material; Secured Area.

Building B–1424
Louisiana Army Ammunition Plant
Doyline Co: Webster LA 71023–
Landholding Agency: Army
Property Number: 219620105
Status: Unutilized
Reason: Within 2000 ft. of flammable or explosive material; Secured Area.

Building B–1456
Louisiana Army Ammunition Plant
Doyline Co: Webster LA 71023–
Landholding Agency: Army
Property Number: 219620106
Status: Unutilized
Reason: Within 2000 ft. of flammable or explosive material; Secured Area.

Building B–1457
Louisiana Army Ammunition Plant
Doyline Co: Webster LA 71023–
Landholding Agency: Army
Property Number: 219620107
Status: Unutilized
Reason: Within 2000 ft. of flammable or explosive material; Secured Area.

Building B–1458
Louisiana Army Ammunition Plant
Doyline Co: Webster LA 71023–
Landholding Agency: Army
Property Number: 219620108
Status: Unutilized
Reason: Within 2000 ft. of flammable or explosive material; Secured Area.

Building H–0914
Louisiana Army Ammunition Plant
Doyline Co: Webster LA 71023–
Landholding Agency: Army
Property Number: 219620109
Status: Unutilized
Reason: Within 2000 ft. of flammable or explosive material; Secured Area.

Building A–0112
Louisiana Army Ammunition Plant
Doyline Co: Webster LA 71023–
Landholding Agency: Army
Property Number: 219620110
Status: Unutilized
Reason: Within 2000 ft. of flammable or explosive material; Secured Area.

Building C–1306
Louisiana Army Ammunition Plant
Doyline Co: Webster LA 71023–
Landholding Agency: Army
Property Number: 219620111
Status: Unutilized
Reason: Within 2000 ft. of flammable or explosive material; Secured Area.

Building G–0814
Louisiana Army Ammunition Plant
Doyline Co: Webster LA 71023–
Landholding Agency: Army
Property Number: 219620112
Status: Unutilized
Reason: Within 2000 ft. of flammable or explosive material; Secured Area.

Building E–1725
Louisiana Army Ammunition Plant
Doyline Co: Webster LA 71023–
Landholding Agency: Army
Property Number: 219620113
Status: Unutilized
Reason: Within 2000 ft. of flammable or explosive material; Secured Area.

Building X–5055
Louisiana Army Ammunition Plant
Doyline Co: Webster LA 71023–
Landholding Agency: Army
Property Number: 219620114
Status: Unutilized
Reason: Within 2000 ft. of flammable or explosive material; Secured Area.

Building S–1626
Louisiana Army Ammunition Plant
Doyline Co: Webster LA 71023–
Landholding Agency: Army
Property Number: 219620115
Status: Unutilized
Reason: Within 2000 ft. of flammable or explosive material; Secured Area.

Building C–1354
Louisiana Army Ammunition Plant
Doyline Co: Webster LA 71023–
Landholding Agency: Army
Property Number: 219620116
Status: Unutilized
Reason: Within 2000 ft. of flammable or explosive material; Secured Area.

Building B–1449
Louisiana Army Ammunition Plant
Doyline Co: Webster LA 71023–
Landholding Agency: Army
Property Number: 219620117
Status: Unutilized
Reason: Within 2000 ft. of flammable or explosive material; Secured Area.

Building B–1443
Louisiana Army Ammunition Plant
Doyline Co: Webster LA 71023–
Landholding Agency: Army
Property Number: 219620118
Status: Unutilized
Reason: Within 2000 ft. of flammable or explosive material; Secured Area.

Building S–1609
Louisiana Army Ammunition Plant
Doyline Co: Webster LA 71023–
Landholding Agency: Army
Property Number: 219620119
Status: Unutilized
Reason: Within 2000 ft. of flammable or explosive material; Secured Area.

Building K–1121
Louisiana Army Ammunition Plant
Doyline Co: Webster LA 71023–
Landholding Agency: Army
Property Number: 219620120
Status: Unutilized
Reason: Within 2000 ft. of flammable or explosive material; Secured Area.

Building M–2707
Louisiana Army Ammunition Plant
Doyline Co: Webster LA 71023–
Landholding Agency: Army
Property Number: 219620121
Status: Unutilized
Reason: Within 2000 ft. of flammable or explosive material; Secured Area.

Building D–1241
Louisiana Army Ammunition Plant
Doyline Co: Webster LA 71023–
Landholding Agency: Army
Property Number: 219620122
Status: Unutilized
Reason: Within 2000 ft. of flammable or explosive material; Secured Area.

Building D–1205
Louisiana Army Ammunition Plant
Doyline Co: Webster LA 71023–
Landholding Agency: Army
Property Number: 219620123
Status: Unutilized
Reason: Within 2000 ft. of flammable or explosive material; Secured Area.

Building M–0612
Louisiana Army Ammunition Plant
Doyline Co: Webster LA 71023–
Landholding Agency: Army
Property Number: 219620124
Status: Unutilized
Reason: Within 2000 ft. of flammable or explosive material; Secured Area.

Building M–0611
Louisiana Army Ammunition Plant
Doyline Co: Webster LA 71023–
Landholding Agency: Army
Property Number: 219620125
Status: Unutilized
Reason: Within 2000 ft. of flammable or explosive material; Secured Area.

Building M–0610
Louisiana Army Ammunition Plant
Doyline Co: Webster LA 71023–
Landholding Agency: Army
Property Number: 219620126
Status: Unutilized
Reason: Within 2000 ft. of flammable or explosive material; Secured Area.

Building M–0609
Louisiana Army Ammunition Plant
Doyline Co: Webster LA 71023–
Landholding Agency: Army
Property Number: 219620127
Status: Unutilized
Reason: Within 2000 ft. of flammable or explosive material; Secured Area.

Building M–0613
Louisiana Army Ammunition Plant
Doyline Co: Webster LA 71023–
Landholding Agency: Army
Property Number: 219620128
Status: Unutilized
Reason: Within 2000 ft. of flammable or explosive material; Secured Area.

Building M–0607
Louisiana Army Ammunition Plant
Doyline Co: Webster LA 71023–
Landholding Agency: Army
Property Number: 219620129
Status: Unutilized
Reason: Within 2000 ft. of flammable or explosive material; Secured Area.

Building M–0606
Louisiana Army Ammunition Plant
Doyline Co: Webster LA 71023–
Landholding Agency: Army
Property Number: 219620130
Status: Unutilized
Reason: Within 2000 ft. of flammable or explosive material; Secured Area.

Building M–0605
Louisiana Army Ammunition Plant
Doyline Co: Webster LA 71023–
Landholding Agency: Army
Property Number: 219620131
Status: Unutilized
Reason: Within 2000 ft. of flammable or explosive material; Secured Area.

Building M–0604
Louisiana Army Ammunition Plant
Doyline Co: Webster LA 71023–
Landholding Agency: Army
Property Number: 219620132
Status: Unutilized
Reason: Within 2000 ft. of flammable or explosive material; Secured Area.

Building M–0603
Louisiana Army Ammunition Plant
Doyline Co: Webster LA 71023–
Landholding Agency: Army
Property Number: 219620133
Status: Unutilized
Reason: Within 2000 ft. of flammable or explosive material; Secured Area.

Building M–0211
Louisiana Army Ammunition Plant
Doyline Co: Webster LA 71023–
Landholding Agency: Army
Property Number: 219620134
Status: Unutilized
Reason: Within 2000 ft. of flammable or explosive material; Secured Area.

Building X–5014
Louisiana Army Ammunition Plant
Doyline Co: Webster LA 71023–
Landholding Agency: Army
Property Number: 219620135
Status: Unutilized
Reason: Within 2000 ft. of flammable or explosive material; Secured Area.

Building M–0210
Louisiana Army Ammunition Plant
Doyline Co: Webster LA 71023–
Landholding Agency: Army
Property Number: 219620136
Status: Unutilized
Reason: Within 2000 ft. of flammable or explosive material; Secured Area.

Building M–0207
Louisiana Army Ammunition Plant
Doyline Co: Webster LA 71023–
Landholding Agency: Army
Property Number: 219620137
Status: Unutilized
Reason: Within 2000 ft. of flammable or explosive material; Secured Area.

Building M–2110
Louisiana Army Ammunition Plant
Doyline Co: Webster LA 71023–
Landholding Agency: Army
Property Number: 219620139
Status: Unutilized
Reason: Within 2000 ft. of flammable or explosive material; Secured Area.

Building M–2105
Louisiana Army Ammunition Plant
Doyline Co: Webster LA 71023–
Landholding Agency: Army
Property Number: 219620140
Status: Unutilized
Reason: Within 2000 ft. of flammable or explosive material; Secured Area.

Building M–2104
Louisiana Army Ammunition Plant
Doyline Co: Webster LA 71023–
Landholding Agency: Army
Property Number: 219620141
Status: Unutilized
Reason: Within 2000 ft. of flammable or explosive material; Secured Area.

Building M–2103
Louisiana Army Ammunition Plant
Doyline Co: Webster LA 71023–
Landholding Agency: Army
Property Number: 219620142
Status: Unutilized
Reason: Within 2000 ft. of flammable or explosive material; Secured Area.

Building M–2102
Louisiana Army Ammunition Plant
Doyline Co: Webster LA 71023–
Landholding Agency: Army
Property Number: 219620143
Status: Unutilized
Reason: Within 2000 ft. of flammable or explosive material; Secured Area.

Building M–2101
Louisiana Army Ammunition Plant
Doyline Co: Webster LA 71023–
Landholding Agency: Army
Property Number: 219620144
Status: Unutilized
Reason: Within 2000 ft. of flammable or explosive material; Secured Area.

Building X–5070
Louisiana Army Ammunition Plant
Doyline Co: Webster LA 71023–
Landholding Agency: Army
Property Number: 219620145
Status: Unutilized
Reason: Within 2000 ft. of flammable or explosive material; Secured Area.

Building X–5100
Louisiana Army Ammunition Plant
Doyline Co: Webster LA 71023–
Landholding Agency: Army
Property Number: 219620146
Status: Unutilized
Reason: Within 2000 ft. of flammable or explosive material; Secured Area.

Building A–0156
Louisiana Army Ammunition Plant
Doyline Co: Webster LA 71023–
Landholding Agency: Army
Property Number: 219620147
Status: Unutilized
Reason: Within 2000 ft. of flammable or explosive material; Secured Area.

Building B–1410
Louisiana Army Ammunition Plant
Doyline Co: Webster LA 71023–
Landholding Agency: Army
Property Number: 219620148
Status: Unutilized
Reason: Within 2000 ft. of flammable or explosive material; Secured Area.

Building B–1463
Louisiana Army Ammunition Plant
Doyline Co: Webster LA 71023–
Landholding Agency: Army
Property Number: 219620149
Status: Unutilized
Reason: Within 2000 ft. of flammable or explosive material; Secured Area.

Building N–1814
Louisiana Army Ammunition Plant
Doyline Co: Webster LA 71023–
Landholding Agency: Army
Property Number: 219620150
Status: Unutilized
Reason: Within 2000 ft. of flammable or explosive material; Secured Area.

Building N–1815
Louisiana Army Ammunition Plant
Doyline Co: Webster LA 71023–
Landholding Agency: Army
Property Number: 219620151
Status: Unutilized
Reason: Within 2000 ft. of flammable or explosive material; Secured Area.

Building Y–2612
Louisiana Army Ammunition Plant
Doyline Co: Webster LA 71023–
Landholding Agency: Army
Property Number: 219620152
Status: Unutilized
Reason: Within 2000 ft. of flammable or explosive material; Secured Area.

Building A–0151
Louisiana Army Ammunition Plant
Doyline Co: Webster LA 71023–
Landholding Agency: Army
Property Number: 219620153
Status: Unutilized
Reason: Within 2000 ft. of flammable or explosive material; Secured Area.

Buildings L–508, 509, 701–704
Louisiana Army Ammunition Plant
Doyline Co: Webster LA 71023–
Landholding Agency: Army
Property Number: 219620154
Status: Unutilized
Reason: Within 2000 ft. of flammable or explosive material; Secured Area.

Buildings L–0304
Louisiana Army Ammunition Plant
Doyline Co: Webster LA 71023-
Landholding Agency: Army
Property Number: 219620155
Status: Unutilized
Reason: Within 2000 ft. of flammable or explosive material; Secured Area.

Buildings L–0303
Louisiana Army Ammunition Plant
Doyline Co: Webster LA 71023-
Landholding Agency: Army
Property Number: 219620156
Status: Unutilized
Reason: Within 2000 ft. of flammable or explosive material; Secured Area.

Buildings L–0302
Louisiana Army Ammunition Plant
Doyline Co: Webster LA 71023-
Landholding Agency: Army
Property Number: 219620157
Status: Unutilized
Reason: Within 2000 ft. of flammable or explosive material; Secured Area.

Buildings L–0301
Louisiana Army Ammunition Plant
Doyline Co: Webster LA 71023-
Landholding Agency: Army
Property Number: 219620158
Status: Unutilized

Reason: Within 2000 ft. of flammable or explosive material; Secured Area.

Buildings A–0109
Louisiana Army Ammunition Plant
Doyline Co: Webster LA 71023-
Landholding Agency: Army
Property Number: 219620159
Status: Unutilized
Reason: Within 2000 ft. of flammable or explosive material; Secured Area.

Buildings L–2201 thru L–2207
Louisiana Army Ammunition Plant
Doyline Co: Webster LA 71023-
Landholding Agency: Army
Property Number: 219620160
Status: Unutilized
Reason: Within 2000 ft. of flammable or explosive material; Secured Area.

Building L–0507
Louisiana Army Ammunition Plant
Doyline Co: Webster LA 71023-
Landholding Agency: Army
Property Number: 219620161
Status: Unutilized
Reason: Within 2000 ft. of flammable or explosive material; Secured Area.

Building L–0506
Louisiana Army Ammunition Plant
Doyline Co: Webster LA 71023-
Landholding Agency: Army
Property Number: 219620162
Status: Unutilized
Reason: Within 2000 ft. of flammable or explosive material; Secured Area.

Building L–0505
Louisiana Army Ammunition Plant
Doyline Co: Webster LA 71023-
Landholding Agency: Army
Property Number: 219620163
Status: Unutilized
Reason: Within 2000 ft. of flammable or explosive material; Secured Area.

Building L–0504
Louisiana Army Ammunition Plant
Doyline Co: Webster LA 71023-
Landholding Agency: Army
Property Number: 219620164
Status: Unutilized
Reason: Within 2000 ft. of flammable or explosive material; Secured Area.

Building L–0503
Louisiana Army Ammunition Plant
Doyline Co: Webster LA 71023-
Landholding Agency: Army
Property Number: 219620165
Status: Unutilized
Reason: Within 2000 ft. of flammable or explosive material; Secured Area.

Building L–0502
Louisiana Army Ammunition Plant
Doyline Co: Webster LA 71023-
Landholding Agency: Army
Property Number: 219620166
Status: Unutilized
Reason: Within 2000 ft. of flammable or explosive material; Secured Area.

Building L–0501
Louisiana Army Ammunition Plant
Doyline Co: Webster LA 71023-
Landholding Agency: Army
Property Number: 219620167
Status: Unutilized
Reason: Within 2000 ft. of flammable or explosive material; Secured Area.

Building L–0309
Louisiana Army Ammunition Plant
Doyline Co: Webster LA 71023-
Landholding Agency: Army
Property Number: 219620168
Status: Unutilized
Reason: Within 2000 ft. of flammable or explosive material; Secured Area.

Building L–0308
Louisiana Army Ammunition Plant
Doyline Co: Webster LA 71023-
Landholding Agency: Army
Property Number: 219620169
Status: Unutilized
Reason: Within 2000 ft. of flammable or explosive material; Secured Area.

Building L–0307
Louisiana Army Ammunition Plant
Doyline Co: Webster LA 71023-
Landholding Agency: Army
Property Number: 219620170
Status: Unutilized
Reason: Within 2000 ft. of flammable or explosive material; Secured Area.

Building L–0306
Louisiana Army Ammunition Plant
Doyline Co: Webster LA 71023-
Landholding Agency: Army
Property Number: 219620171
Status: Unutilized
Reason: Within 2000 ft. of flammable or explosive material; Secured Area.

Building L–0305
Louisiana Army Ammunition Plant
Doyline Co: Webster LA 71023-
Landholding Agency: Army
Property Number: 219620172
Status: Unutilized
Reason: Within 2000 ft. of flammable or explosive material; Secured Area.

Building L–2220
Louisiana Army Ammunition Plant
Doyline Co: Webster LA 71023-
Landholding Agency: Army
Property Number: 219620173
Status: Unutilized
Reason: Within 2000 ft. of flammable or explosive material; Secured Area.

Building L–2219
Louisiana Army Ammunition Plant
Doyline Co: Webster LA 71023-
Landholding Agency: Army
Property Number: 219620174
Status: Unutilized
Reason: Within 2000 ft. of flammable or explosive material; Secured Area.

Building L–2218
Louisiana Army Ammunition Plant
Doyline Co: Webster LA 71023—
Landholding Agency: Army
Property Number: 219620175
Status: Unutilized
Reason: Within 2000 ft. of flammable or explosive material; Secured Area.

Building L–2217
Louisiana Army Ammunition Plant
Doyline Co: Webster LA 71023—
Landholding Agency: Army
Property Number: 219620176
Status: Unutilized
Reason: Within 2000 ft. of flammable or explosive material; Secured Area.

Building L–2221
Louisiana Army Ammunition Plant
Doyline Co: Webster LA 71023—
Landholding Agency: Army
Property Number: 219620177
Status: Unutilized
Reason: Within 2000 ft. of flammable or explosive material; Secured Area.

Building L–2216
Louisiana Army Ammunition Plant
Doyline Co: Webster LA 71023—
Landholding Agency: Army
Property Number: 219620178
Status: Unutilized
Reason: Within 2000 ft. of flammable or explosive material; Secured Area.

Building L–2215
Louisiana Army Ammunition Plant
Doyline Co: Webster LA 71023—
Landholding Agency: Army
Property Number: 219620179
Status: Unutilized
Reason: Within 2000 ft. of flammable or explosive material; Secured Area.

Building L–2213
Louisiana Army Ammunition Plant
Doyline Co: Webster LA 71023—
Landholding Agency: Army
Property Number: 219620180
Status: Unutilized
Reason: Within 2000 ft. of flammable or explosive material; Secured Area.

Building L–2214
Louisiana Army Ammunition Plant
Doyline Co: Webster LA 71023—
Landholding Agency: Army
Property Number: 219620181
Status: Unutilized
Reason: Within 2000 ft. of flammable or explosive material; Secured Area.

Building L–2212
Louisiana Army Ammunition Plant
Doyline Co: Webster LA 71023—
Landholding Agency: Army
Property Number: 219620182
Status: Unutilized
Reason: Within 2000 ft. of flammable or explosive material; Secured Area.

Building L–2211
Louisiana Army Ammunition Plant
Doyline Co: Webster LA 71023—
Landholding Agency: Army
Property Number: 219620183
Status: Unutilized
Reason: Within 2000 ft. of flammable or explosive material; Secured Area.

Building L–2210
Louisiana Army Ammunition Plant
Doyline Co: Webster LA 71023—
Landholding Agency: Army
Property Number: 219620184
Status: Unutilized
Reason: Within 2000 ft. of flammable or explosive material; Secured Area.

Building L–2209
Louisiana Army Ammunition Plant
Doyline Co: Webster LA 71023—
Landholding Agency: Army
Property Number: 219620185
Status: Unutilized
Reason: Within 2000 ft. of flammable or explosive material; Secured Area.

Building L–2208
Louisiana Army Ammunition Plant
Doyline Co: Webster LA 71023—
Landholding Agency: Army

Property Number: 219620186
Status: Unutilized
Reason: Within 2000 ft. of flammable or explosive material; Secured Area.

Building L–2249
Louisiana Army Ammunition Plant
Doyline Co: Webster LA 71023—
Landholding Agency: Army
Property Number: 219620187
Status: Unutilized
Reason: Within 2000 ft. of flammable or explosive material; Secured Area.

Building L–2238
Louisiana Army Ammunition Plant
Doyline Co: Webster LA 71023—
Landholding Agency: Army
Property Number: 219620188
Status: Unutilized
Reason: Within 2000 ft. of flammable or explosive material; Secured Area.

Building L–2236
Louisiana Army Ammunition Plant
Doyline Co: Webster LA 71023—
Landholding Agency: Army
Property Number: 219620189
Status: Unutilized
Reason: Within 2000 ft. of flammable or explosive material; Secured Area.

Building L–2250
Louisiana Army Ammunition Plant
Doyline Co: Webster LA 71023—
Landholding Agency: Army
Property Number: 219620190
Status: Unutilized
Reason: Within 2000 ft. of flammable or explosive material; Secured Area.

Building L–2235
Louisiana Army Ammunition Plant
Doyline Co: Webster LA 71023—
Landholding Agency: Army
Property Number: 219620191
Status: Unutilized
Reason: Within 2000 ft. of flammable or explosive material; Secured Area.

Building L–2233
Louisiana Army Ammunition Plant
Doyline Co: Webster LA 71023—
Landholding Agency: Army
Property Number: 219620192
Status: Unutilized
Reason: Within 2000 ft. of flammable or explosive material; Secured Area.

Building L–2232
Louisiana Army Ammunition Plant
Doyline Co: Webster LA 71023—
Landholding Agency: Army
Property Number: 219620193
Status: Unutilized
Reason: Within 2000 ft. of flammable or explosive material; Secured Area.

Building L–2231
Louisiana Army Ammunition Plant
Doyline Co: Webster LA 71023—
Landholding Agency: Army
Property Number: 219620194
Status: Unutilized
Reason: Within 2000 ft. of flammable or explosive material; Secured Area.

Building L–2230
Louisiana Army Ammunition Plant
Doyline Co: Webster LA 71023–
Landholding Agency: Army
Property Number: 219620195
Status: Unutilized
Reason: Within 2000 ft. of flammable or explosive material; Secured Area.

Building L–2229
Louisiana Army Ammunition Plant
Doyline Co: Webster LA 71023–
Landholding Agency: Army
Property Number: 219620196
Status: Unutilized
Reason: Within 2000 ft. of flammable or explosive material; Secured Area.

Building L–2222
Louisiana Army Ammunition Plant
Doyline Co: Webster LA 71023–
Landholding Agency: Army
Property Number: 219620197
Status: Unutilized
Reason: Within 2000 ft. of flammable or explosive material; Secured Area.

Building L–2223
Louisiana Army Ammunition Plant
Doyline Co: Webster LA 71023–
Landholding Agency: Army
Property Number: 219620198
Status: Unutilized
Reason: Within 2000 ft. of flammable or explosive material; Secured Area.

Building L–2227
Louisiana Army Ammunition Plant
Doyline Co: Webster LA 71023–
Landholding Agency: Army
Property Number: 219620199
Status: Unutilized
Reason: Within 2000 ft. of flammable or explosive material; Secured Area.

Building L–2228
Louisiana Army Ammunition Plant
Doyline Co: Webster LA 71023–
Landholding Agency: Army
Property Number: 219620200
Status: Unutilized
Reason: Within 2000 ft. of flammable or explosive material; Secured Area.

New York

Building T–2035
Fort Drum
Fort Drum Co: Jefferson NY 13602–
Landholding Agency: Army
Property Number: 219620232
Status: Unutilized
Reason: Secured Area; Extensive deterioration.

North Carolina

Bldg. 1315
Marine Corps Air Station, Cherry Point
Havelock Co: Craven NC 28533–
Landholding Agency: Navy
Property Number: 779620037
Status: Excess
Reason: Secured Area; Extensive deterioration.

Bldg. 1748
Marine Corps Air Station, Cherry Point
Havelock Co: Craven NC 28533–
Landholding Agency: Navy
Property Number: 779620038
Status: Excess
Reason: Secured Area; Extensive deterioration.

Bldg. 1898
Marine Corps Air Station, Cherry Point
Havelock Co: Craven NC 28533–
Landholding Agency: Navy
Property Number: 779620039
Status: Excess
Reason: Secured Area; Extensive deterioration.

Bldg. 4054
Marine Corps Air Station, Cherry Point
Havelock Co: Craven NC 28533–
Landholding Agency: Navy
Property Number: 779620040
Status: Excess
Reason: Secured Area; Extensive deterioration.

Bldg. 8075
Marine Corps Air Station, Cherry Point
Havelock Co: Craven NC 28533–
Landholding Agency: Navy
Property Number: 779620041
Status: Excess
Reason: Secured Area; Extensive deterioration.

South Carolina

Bldg. 1428
Fort Jackson
Ft. Jackson Co: Richland SC 29207–
Landholding Agency: Army
Property Number: 219620306
Status: Unutilized
Reason: Extensive deterioration.

Bldg. 1429
Fort Jackson
Ft. Jackson Co: Richland SC 29207–
Landholding Agency: Army
Property Number: 219620307
Status: Unutilized
Reason: Extensive deterioration.

Bldg. 2032
Fort Jackson
Ft. Jackson Co: Richland SC 29207–
Landholding Agency: Army
Property Number: 219620308
Status: Unutilized
Reason: Extensive deterioration.

Bldg. 2033
Fort Jackson
Ft. Jackson Co: Richland SC 29207–
Landholding Agency: Army
Property Number: 219620309
Status: Unutilized
Reason: Extensive deterioration.

Bldg. 2413
Fort Jackson
Ft. Jackson Co: Richland SC 29207–
Landholding Agency: Army
Property Number: 219620310
Status: Unutilized
Reason: Extensive deterioration.

Bldg. 2444
Fort Jackson
Ft. Jackson Co: Richland SC 29207–
Landholding Agency: Army
Property Number: 219620311
Status: Unutilized
Reason: Extensive deterioration.

Bldg. 2511
Fort Jackson
Ft. Jackson Co: Richland SC 29207–
Landholding Agency: Army
Property Number: 219620312
Status: Unutilized
Reason: Extensive deterioration.

Bldg. 2516
Fort Jackson
Ft. Jackson Co: Richland SC 29207–
Landholding Agency: Army

Property Number: 219620313
Status: Unutilized
Reason: Extensive deterioration.

Bldg. 2547
Fort Jackson
Ft. Jackson Co: Richland SC 29207–
Landholding Agency: Army
Property Number: 219620314
Status: Unutilized
Reason: Extensive deterioration.

Bldg. 2566
Fort Jackson
Ft. Jackson Co: Richland SC 29207–
Landholding Agency: Army
Property Number: 219620315
Status: Unutilized
Reason: Extensive deterioration.

Bldg. 3370
Fort Jackson
Ft. Jackson Co: Richland SC 29207–
Landholding Agency: Army
Property Number: 219620316
Status: Unutilized
Reason: Extensive deterioration.

Bldg. H3307
Fort Jackson
Ft. Jackson Co: Richland SC 29207–
Landholding Agency: Army
Property Number: 219620317
Status: Unutilized
Reason: Extensive deterioration.

Bldg. 3371
Fort Jackson
Ft. Jackson Co: Richland SC 29207–
Landholding Agency: Army
Property Number: 219620318
Status: Unutilized
Reason: Extensive deterioration.

Bldg. 3495
Fort Jackson
Ft. Jackson Co: Richland SC 29207–
Landholding Agency: Army
Property Number: 219620319
Status: Unutilized
Reason: Extensive deterioration.

Bldg. 3496
Fort Jackson
Ft. Jackson Co: Richland SC 29207–
Landholding Agency: Army
Property Number: 219620320
Status: Unutilized
Reason: Extensive deterioration.

Bldg. E4815
Fort Jackson
Ft. Jackson Co: Richland SC 29207–
Landholding Agency: Army
Property Number: 219620321
Status: Unutilized
Reason: Extensive deterioration.

Bldg. E4827
Fort Jackson
Ft. Jackson Co: Richland SC 29207–
Landholding Agency: Army
Property Number: 219620322
Status: Unutilized
Reason: Extensive deterioration.

Bldg. 5403
Fort Jackson
Ft. Jackson Co: Richland SC 29207–
Landholding Agency: Army
Property Number: 219620323
Status: Unutilized
Reason: Extensive deterioration.

Bldg. 5044
Fort Jackson
Ft. Jackson Co: Richland SC 29207–
Landholding Agency: Army
Property Number: 219620324
Status: Unutilized
Reason: Extensive deterioration.

Bldg. 5045
Fort Jackson
Ft. Jackson Co: Richland SC 29207–
Landholding Agency: Army
Property Number: 219620325
Status: Unutilized
Reason: Extensive deterioration.

Bldg. 5046
Fort Jackson
Ft. Jackson Co: Richland SC 29207–
Landholding Agency: Army
Property Number: 219620326
Status: Unutilized
Reason: Extensive deterioration.

Bldg. 5047
Fort Jackson
Ft. Jackson Co: Richland SC 29207–
Landholding Agency: Army
Property Number: 219620327
Status: Unutilized
Reason: Extensive deterioration.

Bldg. 5048
Fort Jackson
Ft. Jackson Co: Richland SC 29207–
Landholding Agency: Army
Property Number: 219620328
Status: Unutilized
Reason: Extensive deterioration.

Bldg. 5491
Fort Jackson
Ft. Jackson Co: Richland SC 29207–
Landholding Agency: Army
Property Number: 219620329
Status: Unutilized
Reason: Extensive deterioration.

Bldg. 5496
Fort Jackson
Ft. Jackson Co: Richland SC 29207–
Landholding Agency: Army
Property Number: 219620330
Status: Unutilized
Reason: Extensive deterioration.

Bldg. 5492
Fort Jackson
Ft. Jackson Co: Richland SC 29207–
Landholding Agency: Army
Property Number: 219620331
Status: Unutilized
Reason: Extensive deterioration.

Bldg. F6029
Fort Jackson
Ft. Jackson Co: Richland SC 29207–
Landholding Agency: Army
Property Number: 219620332
Status: Unutilized
Reason: Extensive deterioration.

Bldg. 6525
Fort Jackson
Ft. Jackson Co: Richland SC 29207–
Landholding Agency: Army
Property Number: 219620333
Status: Unutilized
Reason: Extensive deterioration.

Bldg. L7272
Fort Jackson
Ft. Jackson Co: Richland SC 29207–
Landholding Agency: Army
Property Number: 219620334
Status: Unutilized
Reason: Extensive deterioration.

Bldg. L7285
Fort Jackson
Ft. Jackson Co: Richland SC 29207–
Landholding Agency: Army
Property Number: 219620335
Status: Unutilized
Reason: Extensive deterioration.

Bldg. L7286
Fort Jackson
Ft. Jackson Co: Richland SC 29207–
Landholding Agency: Army
Property Number: 219620336
Status: Unutilized
Reason: Extensive deterioration.

Bldg. H7772
Fort Jackson
Ft. Jackson Co: Richland SC 29207–
Landholding Agency: Army
Property Number: 219620337
Status: Unutilized
Reason: Extensive deterioration.

Bldg. J8472
Fort Jackson
Ft. Jackson Co: Richland SC 29207–
Landholding Agency: Army
Property Number: 219620338
Status: Unutilized
Reason: Extensive deterioration.

Bldg. J8474
Fort Jackson
Ft. Jackson Co: Richland SC 29207–
Landholding Agency: Army
Property Number: 219620339
Status: Unutilized
Reason: Extensive deterioration.

Bldg. J8475
Fort Jackson
Ft. Jackson Co: Richland SC 29207–
Landholding Agency: Army
Property Number: 219620340
Status: Unutilized
Reason: Extensive deterioration.

Bldg. J8532
Fort Jackson
Ft. Jackson Co: Richland SC 29207–
Landholding Agency: Army
Property Number: 219620341
Status: Unutilized
Reason: Extensive deterioration.

Bldg. J8542
Fort Jackson
Ft. Jackson Co: Richland SC 29207–
Landholding Agency: Army
Property Number: 219620342
Status: Unutilized
Reason: Extensive deterioration.

Bldg. J8571
Fort Jackson
Ft. Jackson Co: Richland SC 29207–
Landholding Agency: Army
Property Number: 219620343
Status: Unutilized
Reason: Extensive deterioration.

Bldg. J8574
Fort Jackson
Ft. Jackson Co: Richland SC 29207–
Landholding Agency: Army
Property Number: 219620344
Status: Unutilized
Reason: Extensive deterioration.

Bldg. J8583
Fort Jackson

Ft. Jackson Co: Richland SC 29207–
Landholding Agency: Army
Property Number: 219620345
Status: Unutilized
Reason: Extensive deterioration.

Bldg. J8585
Fort Jackson
Ft. Jackson Co: Richland SC 29207–
Landholding Agency: Army
Property Number: 219620346
Status: Unutilized
Reason: Extensive deterioration.

Bldg. J8642
Fort Jackson
Ft. Jackson Co: Richland SC 29207–
Landholding Agency: Army
Property Number: 219620347
Status: Unutilized
Reason: Extensive deterioration.

Bldg. J8644
Fort Jackson
Ft. Jackson Co: Richland SC 29207–
Landholding Agency: Army
Property Number: 219620348
Status: Unutilized
Reason: Extensive deterioration.

Bldg. J8642
Fort Jackson
Ft. Jackson Co: Richland SC 29207–
Landholding Agency: Army
Property Number: 219620349
Status: Unutilized
Reason: Extensive deterioration.

Bldg. J8691
Fort Jackson
Ft. Jackson Co: Richland SC 29207–
Landholding Agency: Army
Property Number: 219620350
Status: Unutilized
Reason: Extensive deterioration.

Bldg. J8693
Fort Jackson
Ft. Jackson Co: Richland SC 29207–
Landholding Agency: Army
Property Number: 219620351
Status: Unutilized
Reason: Extensive deterioration.

Bldg. J8794
Fort Jackson
Ft. Jackson Co: Richland SC 29207–
Landholding Agency: Army
Property Number: 219620352
Status: Unutilized
Reason: Extensive deterioration.

Bldg. J8799
Fort Jackson
Ft. Jackson Co: Richland SC 29207–
Landholding Agency: Army
Property Number: 219620353
Status: Unutilized
Reason: Extensive deterioration.

Bldg. 9500
Fort Jackson
Ft. Jackson Co: Richland SC 29207–
Landholding Agency: Army
Property Number: 219620354
Status: Unutilized
Reason: Extensive deterioration.

Bldg. 9508
Fort Jackson
Ft. Jackson Co: Richland SC 29207–
Landholding Agency: Army
Property Number: 219620355
Status: Unutilized
Reason: Extensive deterioration.

Bldg. 9510
Fort Jackson
Ft. Jackson Co: Richland SC 29207–
Landholding Agency: Army
Property Number: 219620356
Status: Unutilized
Reason: Extensive deterioration.

Bldg. 9513
Fort Jackson
Ft. Jackson Co: Richland SC 29207–
Landholding Agency: Army
Property Number: 219620357
Status: Unutilized
Reason: Extensive deterioration.

Bldg. 9600
Fort Jackson
Ft. Jackson Co: Richland SC 29207–
Landholding Agency: Army
Property Number: 219620358
Status: Unutilized
Reason: Extensive deterioration.

Bldg. 9601
Fort Jackson
Ft. Jackson Co: Richland SC 29207–
Landholding Agency: Army
Property Number: 219620359
Status: Unutilized
Reason: Extensive deterioration.

Bldg. 9602
Fort Jackson
Ft. Jackson Co: Richland SC 29207–
Landholding Agency: Army
Property Number: 219620360
Status: Unutilized
Reason: Extensive deterioration.

Bldg. 10–500
Fort Jackson
Ft. Jackson Co: Richland SC 29207–
Landholding Agency: Army
Property Number: 219620361
Status: Unutilized
Reason: Extensive deterioration.

Bldg. 10–501
Fort Jackson
Ft. Jackson Co: Richland SC 29207–
Landholding Agency: Army
Property Number: 219620362
Status: Unutilized
Reason: Extensive deterioration.

Bldg. 10–502
Fort Jackson
Ft. Jackson Co: Richland SC 29207–
Landholding Agency: Army
Property Number: 219620363
Status: Unutilized
Reason: Extensive deterioration.

Bldg. 10–503
Fort Jackson
Ft. Jackson Co: Richland SC 29207–
Landholding Agency: Army
Property Number: 219620364
Status: Unutilized
Reason: Extensive deterioration.

Bldg. 10–504
Fort Jackson
Ft. Jackson Co: Richland SC 29207–
Landholding Agency: Army
Property Number: 219620365
Status: Unutilized
Reason: Extensive deterioration.

Bldg. 10–505
Fort Jackson
Ft. Jackson Co: Richland SC 29207–
Landholding Agency: Army
Property Number: 219620366
Status: Unutilized
Reason: Extensive deterioration.

Bldg. 10–506
Fort Jackson
Ft. Jackson Co: Richland SC 29207–
Landholding Agency: Army
Property Number: 219620367
Status: Unutilized
Reason: Extensive deterioration.

Bldg. 10–510
Fort Jackson
Ft. Jackson Co: Richland SC 29207–
Landholding Agency: Army
Property Number: 219620368
Status: Unutilized
Reason: Extensive deterioration.

Texas

Bldg. 2027, Fort Bliss
El Paso Co: El Paso TX 79916–
Landholding Agency: Army
Property Number: 219620238
Status: Unutilized
Reason: Extensive deterioration.

Bldg. 2443, Fort Bliss
El Paso Co: El Paso TX 79916–
Landholding Agency: Army
Property Number: 219620239
Status: Unutilized
Reason: Extensive deterioration.

Bldg. T–1194
Fort Sam Houston
San Antonio Co: Bexar TX 78234–5000
Landholding Agency: Army
Property Number: 219620240
Status: Unutilized
Reason: Extensive deterioration.

Bldg. T–1195
Fort Sam Houston
San Antonio Co: Bexar TX 78234–5000
Landholding Agency: Army
Property Number: 219620241
Status: Unutilized
Reason: Extensive deterioration.

6 Bldgs.
Fort Sam Houston
San Antonio Co: Bexar TX 78234–5000
Location: T–5134, T–5136, T–5138, T–5139, T–5140, T–5137
Landholding Agency: Army
Property Number: 219620242
Status: Unutilized
Reason: Other
Comment: detached latrines.

Bldg. B6
Longhorn Army Ammunition Plant
Karnack Co: Harrison TX 75671–
Landholding Agency: Army
Property Number: 219620243
Status: Unutilized
Reason: Within 2000 ft. of flammable or explosive material Secured Area.

Bldg. B8
Longhorn Army Ammunition Plant
Karnack Co: Harrison TX 75671–
Landholding Agency: Army
Property Number: 219620244
Status: Unutilized
Reason: Within 2000 ft. of flammable or explosive material Secured Area.

Bldg. B12
Longhorn Army Ammunition Plant
Karnack Co: Harrison TX 75671–

Landholding Agency: Army
Property Number: 219620245
Status: Unutilized
Reason: Within 2000 ft. of flammable or explosive material Secured Area.

Bldg. P12
Longhorn Army Ammunition Plant
Karnack Co: Harrison TX 75671–
Landholding Agency: Army
Property Number: 219620246
Status: Unutilized
Reason: Within 2000 ft. of flammable or explosive material Secured Area.

Bldg. P13
Longhorn Army Ammunition Plant
Karnack Co: Harrison TX 75671–
Landholding Agency: Army
Property Number: 219620247
Status: Unutilized
Reason: Within 2000 ft. of flammable or explosive material Secured Area.

Bldg. B14
Longhorn Army Ammunition Plant
Karnack Co: Harrison TX 75671–
Landholding Agency: Army
Property Number: 219620248
Status: Unutilized
Reason: Within 2000 ft. of flammable or explosive material Secured Area.

Bldg. P14
Longhorn Army Ammunition Plant
Karnack Co: Harrison TX 75671–
Landholding Agency: Army
Property Number: 219620249
Status: Unutilized
Reason: Within 2000 ft. of flammable or explosive material Secured Area.

Bldg. 31M
Longhorn Army Ammunition Plant
Karnack Co: Harrison TX 75671–
Landholding Agency: Army
Property Number: 219620250
Status: Unutilized
Reason: Within 2000 ft. of flammable or explosive material Secured Area.

Bldg. 32H
Longhorn Army Ammunition Plant
Karnack Co: Harrison TX 75671–
Landholding Agency: Army
Property Number: 219620251
Status: Unutilized
Reason: Within 2000 ft. of flammable or explosive material Secured Area.

Bldg. 33W
Longhorn Army Ammunition Plant
Karnack Co: Harrison TX 75671–
Landholding Agency: Army
Property Number: 219620252
Status: Unutilized
Reason: Within 2000 ft. of flammable or explosive material Secured Area.

Bldg. 32G, 34G
Longhorn Army Ammunition Plant
Karnack Co: Harrison TX 75671–
Landholding Agency: Army
Property Number: 219620253
Status: Unutilized
Reason: Within 2000 ft. of flammable or explosive material Secured Area.

Bldg. 35B
Longhorn Army Ammunition Plant
Karnack Co: Harrison TX 75671–
Landholding Agency: Army
Property Number: 219620254
Status: Unutilized
Reason: Within 2000 ft. of flammable or explosive material Secured Area.

Bldg. 36B
Longhorn Army Ammunition Plant
Karnack Co: Harrison TX 75671–
Landholding Agency: Army
Property Number: 219620255
Status: Unutilized
Reason: Within 2000 ft. of flammable or explosive material Secured Area.

Bldg. 38B
Longhorn Army Ammunition Plant
Karnack Co: Harrison TX 75671–
Landholding Agency: Army
Property Number: 219620256
Status: Unutilized
Reason: Within 2000 ft. of flammable or explosive material Secured Area.

Bldg. 39F
Longhorn Army Ammunition Plant
Karnack Co: Harrison TX 75671–
Landholding Agency: Army
Property Number: 219620257
Status: Unutilized
Reason: Within 2000 ft. of flammable or explosive material Secured Area.

Bldg. 40D
Longhorn Army Ammunition Plant
Karnack Co: Harrison TX 75671–
Landholding Agency: Army
Property Number: 219620258
Status: Unutilized
Reason: Within 2000 ft. of flammable or explosive material Secured Area.

Bldg. 41E
Longhorn Army Ammunition Plant
Karnack Co: Harrison TX 75671–
Landholding Agency: Army
Property Number: 219620259
Status: Unutilized
Reason: Within 2000 ft. of flammable or explosive material Secured Area.

Bldg. 42E
Longhorn Army Ammunition Plant
Karnack Co: Harrison TX 75671–
Landholding Agency: Army
Property Number: 219620260
Status: Unutilized
Reason: Within 2000 ft. of flammable or explosive material Secured Area.

Bldg. 46B
Longhorn Army Ammunition Plant
Karnack Co: Harrison TX 75671–
Landholding Agency: Army
Property Number: 219620261
Status: Unutilized
Reason: Within 2000 ft. of flammable or explosive material Secured Area.

Bldg. 47W
Longhorn Army Ammunition Plant
Karnack Co: Harrison TX 75671–
Landholding Agency: Army
Property Number: 219620262
Status: Unutilized
Reason: Within 2000 ft. of flammable or explosive material Secured Area.

Bldg. 62D
Longhorn Army Ammunition Plant
Karnack Co: Harrison TX 75671–
Landholding Agency: Army
Property Number: 219620263
Status: Unutilized
Reason: Within 2000 ft. of flammable or explosive material Secured Area.

Bldg. 62G
Longhorn Army Ammunition Plant
Karnack Co: Harrison TX 75671–
Landholding Agency: Army
Property Number: 219620264
Status: Unutilized
Reason: Within 2000 ft. of flammable or explosive material Secured Area.

Bldg. 68C
Longhorn Army Ammunition Plant
Karnack Co: Harrison TX 75671–
Landholding Agency: Army
Property Number: 219620265
Status: Unutilized
Reason: Within 2000 ft. of flammable or explosive material Secured Area.

Bldg. 75I
Longhorn Army Ammunition Plant
Karnack Co: Harrison TX 75671–
Landholding Agency: Army
Property Number: 219620266
Status: Unutilized
Reason: Within 2000 ft. of flammable or explosive material Secured Area.

Bldg. 47B, 37E, 38E, 27F
Longhorn Army Ammunition Plant
Karnack Co: Harrison TX 75671–
Landholding Agency: Army
Property Number: 219620267
Status: Unutilized
Reason: Within 2000 ft. of flammable or explosive material Secured Area.

Bldg. P108
Longhorn Army Ammunition Plant
Karnack Co: Harrison TX 75671–
Landholding Agency: Army
Property Number: 219620268
Status: Unutilized
Reason: Within 2000 ft. of flammable or explosive material Secured Area.

Bldg. P113
Longhorn Army Ammunition Plant
Karnack Co: Harrison TX 75671–
Landholding Agency: Army
Property Number: 219620269
Status: Unutilized
Reason: Within 2000 ft. of flammable or explosive material Secured Area.

Bldg. P117
Longhorn Army Ammunition Plant
Karnack Co: Harrison TX 75671–
Landholding Agency: Army
Property Number: 219620270
Status: Unutilized
Reason: Within 2000 ft. of flammable or explosive material Secured Area.

Bldg. P122
Longhorn Army Ammunition Plant
Karnack Co: Harrison TX 75671–
Landholding Agency: Army
Property Number: 219620271
Status: Unutilized
Reason: Within 2000 ft. of flammable or explosive material Secured Area.

Bldg. P123
Longhorn Army Ammunition Plant
Karnack Co: Harrison TX 75671–
Landholding Agency: Army
Property Number: 219620272
Status: Unutilized
Reason: Within 2000 ft. of flammable or explosive material Secured Area.

Bldg. 203
Longhorn Army Ammunition Plant

Karnack Co: Harrison TX 75671–
Landholding Agency: Army
Property Number: 219620273
Status: Unutilized
Reason: Within 2000 ft. of flammable or explosive material Secured Area.

Bldg. 205
Longhorn Army Ammunition Plant
Karnack Co: Harrison TX 75671–
Landholding Agency: Army
Property Number: 219620274
Status: Unutilized
Reason: Within 2000 ft. of flammable or explosive material Secured Area.

Bldg. 210
Longhorn Army Ammunition Plant
Karnack Co: Harrison TX 75671–
Landholding Agency: Army
Property Number: 219620275
Status: Unutilized
Reason: Within 2000 ft. of flammable or explosive material Secured Area.

Bldg. 212–12
Longhorn Army Ammunition Plant
Karnack Co: Harrison TX 75671–
Landholding Agency: Army
Property Number: 219620276
Status: Unutilized
Reason: Within 2000 ft. of flammable or explosive material Secured Area.

Bldg. 407
Longhorn Army Ammunition Plant
Karnack Co: Harrison TX 75671–
Landholding Agency: Army
Property Number: 219620277
Status: Unutilized
Reason: Within 2000 ft. of flammable or explosive material Secured Area.

Bldg. 410
Longhorn Army Ammunition Plant
Karnack Co: Harrison TX 75671–
Landholding Agency: Army
Property Number: 219620278
Status: Unutilized
Reason: Within 2000 ft. of flammable or explosive material Secured Area.

Bldg. 725
Longhorn Army Ammunition Plant
Karnack Co: Harrison TX 75671–
Landholding Agency: Army
Property Number: 219620279
Status: Unutilized
Reason: Within 2000 ft. of flammable or explosive material Secured Area.

Bldgs. 726C, 726D
Longhorn Army Ammunition Plant
Karnack Co: Harrison TX 75671–
Landholding Agency: Army
Property Number: 219620280
Status: Unutilized
Reason: Within 2000 ft. of flammable or explosive material Secured Area.

Bldg. 730
Longhorn Army Ammunition Plant
Karnack Co: Harrison TX 75671–
Landholding Agency: Army
Property Number: 219620281
Status: Unutilized
Reason: Within 2000 ft. of flammable or explosive material Secured Area.

Bldg. 734
Longhorn Army Ammunition Plant
Karnack Co: Harrison TX 75671–
Landholding Agency: Army
Property Number: 219620282
Status: Unutilized
Reason: Within 2000 ft. of flammable or explosive material Secured Area.

41 Equip. Bldgs. (811 Series)
Longhorn Army Ammunition Plant
Karnack Co: Harrison TX 75671–
Landholding Agency: Army
Property Number: 219620283
Status: Unutilized
Reason: Within 2000 ft. of flammable or explosive material Secured Area.

Sheds E, J, K, L
Longhorn Army Ammunition Plant
Karnack Co: Harrison TX 75671–
Landholding Agency: Army
Property Number: 219620284
Status: Unutilized
Reason: Within 2000 ft. of flammable or explosive material Secured Area.

5 Bldgs.
Longhorn Army Ammunition Plant
S5, S7, 212–21, 212–23, 212–29
Karnack Co: Harrison TX 75671–
Landholding Agency: Army
Property Number: 219620285
Status: Unutilized
Reason: Within 2000 ft. of flammable or explosive material Secured Area.

Bldgs. 21T, 48Y
Longhorn Army Ammunition Plant
Karnack Co: Harrison TX 75671–
Landholding Agency: Army
Property Number: 219620286
Status: Unutilized
Reason: Within 2000 ft. of flammable or explosive material Secured Area.

Bldgs. DST3, BST2, BST4
Longhorn Army Ammunition Plant
Karnack Co: Harrison TX 75671–
Landholding Agency: Army
Property Number: 219620287
Status: Unutilized
Reason: Within 2000 ft. of flammable or explosive material Secured Area.

8 Bldgs.
Longhorn Army Ammunition Plant
411, 701, 714, 707C, 42W, 44W, 46W, 48W
Karnack Co: Harrison TX 75671–
Landholding Agency: Army
Property Number: 219620288
Status: Unutilized
Reason: Within 2000 ft. of flammable or explosive material Secured Area.

Bldgs. 308A, 308B, 15K, 62I
Longhorn Army Ammunition Plant
Karnack Co: Harrison TX 75671–
Landholding Agency: Army
Property Number: 219620289
Status: Unutilized
Reason: Within 2000 ft. of flammable or explosive material Secured Area.

Bldgs. 810, S15
Longhorn Army Ammunition Plant
Karnack Co: Harrison TX 75671–
Landholding Agency: Army
Property Number: 219620290
Status: Unutilized
Reason: Within 2000 ft. of flammable or explosive material Secured Area.

11 Bldgs.
Longhorn Army Ammunition Plant
Karnack Co: Harrison TX 75671–
Location 36G, 53H, 55H, 65D, 40T, 727R, 69C, 272, 208, 726, 513
Landholding Agency: Army
Property Number: 219620291
Status: Unutilized
Reason: Within 2000 ft. of flammable or explosive material Secured Area.

Wisconsin

Bldg. 2196, Fort McCoy
Ft. McCoy Co: Monroe WI 54656–
Landholding Agency: Army
Property Number: 219620292
Status: Unutilized
Reason: Extensive deterioriation.

Bldg. 553, Fort McCoy
Ft. McCoy Co: Monroe WI 54656–
Landholding Agency: Army
Property Number: 219620293
Status: Unutilized
Reason: Extensive deterioriation.

Bldg. 554, Fort McCoy
Ft. McCoy Co: Monroe WI 54656–
Landholding Agency: Army
Property Number: 219620294
Status: Unutilized
Reason: Extensive deterioriation.

Bldg. 556, Fort McCoy
Ft. McCoy Co: Monroe WI 54656–
Landholding Agency: Army
Property Number: 219620295
Status: Unutilized
Reason: Extensive deterioriation.

Bldg. 1147, Fort McCoy
Ft. McCoy Co: Monroe WI 54656–
Landholding Agency: Army
Property Number: 219620296
Status: Unutilized
Reason: Extensive deterioration.

Bldg. 1148, Fort McCoy
Ft. McCoy Co: Monroe WI 54656–
Landholding Agency: Army
Property Number: 219620297
Status: Unutilized
Reason: Extensive deterioration.

Bldg. 1149, Fort McCoy
Ft. McCoy Co: Monroe WI 54656–
Landholding Agency: Army
Property Number: 219620298
Status: Unutilized
Reason: Extensive deterioration.

Bldg. 1160, Fort McCoy
Ft. McCoy Co: Monroe WI 54656–
Landholding Agency: Army
Property Number: 219620299
Status: Unutilized
Reason: Extensive deterioration.

Bldg. 1503, Fort McCoy
Ft. McCoy Co: Monroe WI 54656–
Landholding Agency: Army
Property Number: 219620300
Status: Unutilized
Reason: Extensive deterioration.

Bldg. 1504, Fort McCoy
Ft. McCoy Co: Monroe WI 54656–
Landholding Agency: Army
Property Number: 219620301
Status: Unutilized
Reason: Extensive deterioration.

Bldg. 1505, Fort McCoy
Ft. McCoy Co: Monroe WI 54656–
Landholding Agency: Army
Property Number: 219620302
Status: Unutilized
Reason: Extensive deterioration.

Bldg. 2177, Fort McCoy

Ft. McCoy Co: Monroe WI 54656–
Landholding Agency: Army
Property Number: 219620303
Status: Unutilized
Reason: Extensive deterioration.

Bldg. 2178, Fort McCoy
Ft. McCoy Co: Monroe WI 54656–
Landholding Agency: Army
Property Number: 219620304
Status: Unutilized
Reason: Extensive deterioration.

Bldg. 2194, Fort McCoy
Ft. McCoy Co: Monroe WI 54656–
Landholding Agency: Army
Property Number: 219620305
Status: Unutilized
Reason: Extensive deterioration.

[FR Doc. 96–14192 Filed 6–6–96; 8:45 am]

BILLING CODE 4210–2G–M

DEPARTMENT OF THE INTERIOR

Fish and Wildlife Service

Notice of Availability of Draft Environmental Impact Statement for the Proposed Establishment of Waccamaw National Wildlife Refuge in Georgetown, Horry, and Marion Counties, SC, and Notice of Meetings To Seek Public Comments

AGENCY: Fish and Wildlife Service, Interior.

ACTION: Notice of availability and meetings.

SUMMARY: This notice advises the public that the U.S. Fish and Wildlife Service, Southeast Region, has made available for public review a draft environmental impact statement (EIS) for the proposed establishment of a national wildlife refuge in Georgetown, Horry, and Marion Counties, South Carolina, and plans to hold two public meetings in the vicinity of the proposed refuge to solicit public comments on the draft EIS.

DATES: The Service will hold two public meetings as follows: (1) At 7:00 p.m. on June 18, 1996, at the Georgetown High School Auditorium, Georgetown, South Carolina; and (2) at 7:00 p.m. on June 19, 1996, at the Burroughs School, Government Annex, McCown Auditorium, Conway, South Carolina. In addition, written comments on the draft EIS should be sent no later than July 31, 1996, to the address given below.

FOR FURTHER INFORMATION CONTACT: Mr. Charles R. Danner, U.S. Fish and Wildlife Service, Southeast Regional Office, 1875 Century Boulevard, Atlanta, GA 30345 (Telephone: 1–800–419–9582).

SUPPLEMENTARY INFORMATION: The study area for the proposed refuge covers approximately 49,800 acres of wetlands and upland forests between the Intracoastal Waterway and U.S. Highway 701 north of Winyah Bay in coastal South Carolina. The draft EIS presents five alternatives for the protection and management of the study area, including one ''no action'' alternative. The other four alternatives are for the establishment of a refuge involving different boundary sizes and locations.

The proposed refuge would (1) Protect and manage diverse habitat components of an important coastal river ecosytem for the benefit of endangered and threatened species, migratory birds, anadromous fish, and forest wildlife, including a wide array of plants and animals associated with bottomland hardwood habitats; and (2) provide compatible widlife-dependent recreational activities involving hunting, fishing, wildlife observation, photography, and environmental education and interpretation for the enjoyment of present and future generations.

The study area for the proposed refuge contains extensive freshwater tidal wetlands; large contiguous blocks of bottomland hardwood forests; and upland forests communities consisting of longleaf and loblolly pine and mixed hardwoods such as turkey, water, and laurel oak. The area provides valuable production habitat for wood ducks and wintering habitat for migratory waterfowl, and is recognized as a key emphasis area in North American Waterfowl Management Plan. The area's wetland and upland forests also provide habitat for the red-cockaded woodpecker, bald eagle, and wood stork, all federally-listed threatened and endangered species. Another endangered species, the shortnose sturgeon, inhabits the area's rivers and waterways.

Dated: May 23, 1996.

Garland D. Pardue,

Acting Regional Director.

[FR Doc. 96–14574 Filed 6–6–96; 8:45 am]

BILLING CODE 4310–55–M

Bureau of Land Management

[WO–610–4110–03–2410]; OMB Approval Number 1004–0145]

Information Collection Submitted to the Office of Management and Budget for Review Under the Paperwork Reduction Act

The proposal for the collection of information listed below has been submitted to the Office of Management and Budget for approval under the provisions of the Paperwork Reduction Act (44 U.S.C. Chapter 35). On March 5, 1996, the BLM published a notice in the Federal Register (61 FR 8639) requesting comments on the collection. The comment period ended May 5, 1996. No comments were received. Copies of the proposed collection of information and related forms and explanatory material may be obtained by contacting the Bureau's Clearance Officer at the phone number listed below. Comments and suggestions on the requirement should be made within 30 days directly to the Bureau Clearance Officer and to the Office of Management and Budget, Paperwork Reduction Project (1004–0145), Washington, DC 20503, telephone 202–395–7340.

Title: Oil and Gas Exploration and Leasing.

OMB Approval Number: 1004–0145.

Abstract: Respondents supply information which will be used to determine the eligibility of an applicant to hold, explore for, and produce oil and gas on Federal lands. The information supplied allows the Bureau of Land Management to determine whether an applicant is qualified to conduct geophysical operations and to hold a lease to obtain a benefit under the terms of the Mineral Leasing Act of 1920.

Bureau Form Numbers: N/A.

Frequency: On occasion.

Description of Respondents: Individuals, small businesses, and oil and gas exploration and drilling companies.

Estimated Completion Time: 1 hour.

Annual Responses: 1400.

Annual Burden Hours: 1400.

Bureau Clearance Officer: Wendy Spencer (303) 236–6642.

Dated: May 28, 1996.

Annetta Cheek,

Leader, Regulatory Management Team.

[FR Doc. 96–14361 Filed 6–6–96; 8:45 am]

BILLING CODE 4318–84–P

[AZ–024–06–1430–01]

Closure of Public Land To Access in Navajo County, AZ

AGENCY: Bureau of Land Management, Interior.

ACTION: Notice of closure of public lands.

SUMMARY: Notice is hereby given that the following described lands are temporarily closed until further notice for the protection of natural resources under the provisions of 43 CFR 8364.1. Exceptions to this notice include all activities associated with public safety including but not limited to emergency personnel, law enforcement and fire

fighting personnel and employees of Citizens Utility Company who may be required to perform emergency maintenance repairs on a communications site on adjoining private lands.

Gila and Salt River Meridian, Arizona

T. 16 N., R. 22 E.,
Sec. 8, N½NW¼, SW¼NW¼.

EFFECTIVE DATE: This order became effective on the lands described above on May 21, 1996—the date of signature of the Land Closure Order by the authorized officer.

SUPPLEMENTARY INFORMATION: The public lands involved (approximately 120 acres) are adjacent to private lands commonly referred to as Woodruff Butte. These private lands are currently being mined for sand and gravel. The butte is regarded as an area of traditional religious significance by the Hopi, Zuni and Navajo tribes. Existing access (unauthorized) to these private lands involves the crossing of the above described public lands. The purpose of this closure order is to allow the Bureau of Land Management to consider granting access to these private lands. This process will include legally mandated consultations with the tribes and other interested parties, and the completion of the environmental analysis required under the National Environmental Policy Act.

ORDER: Notice is hereby given that the above described public lands, upon their respective dates, are closed until further notice.

FOR FURTHER INFORMATION CONTACT: Gail Achesdon, Area Manager, Phoenix Resource Area, 2015 West Deer Valley Road, Phoenix, AZ 85027, (602) 780–8090.

Dated: May 22, 1996.

G.L. Cheniae,

District Manager.

[FR Doc. 96–14342 Filed 6–6–96; 8:45 am]

BILLING CODE 4310–32–M

[NV–010–1990–01]

Notice of Availability

AGENCY: Bureau of Land Management, DOI.

ACTION: Notice of Availability for the Final Environmental Impact Statement (FEIS) and Record of Decision (ROD) for Newmont Gold Company's Bootstrap Project.

SUMMARY: Pursuant to section 102(2)(C) of the National Environmental Policy Act, 40 CFR parts 1500–1508 and 43 CFR 3809, notice is given that the Bureau of Land Management has prepared, with the assistance of a third-party consultant, a FEIS on Newmont's proposed Bootstrap Project in northeastern Nevada, and has made copies of the document available for public review. Also available is the FEIS's associated Record of Decision approving the findings of the Environmental Impact Statement on Newmont's Plan of Operations.

As provided in the Council of Environmental Quality regulation 40 CFR 1506.10(b)(2), an exception to the required thirty day delay between the release of the FEIS and its associated ROD has been granted. Therefore, the ROD is being released simultaneously with the FEIS.

DATES: Written comments on the FEIS will be accepted until close of business on July 8, 1996. No public meetings are scheduled.

ADDRESSES: A copy of the FEIS and ROD can be obtained from: Bureau of Land Management, Elko District Office, Attn: Deb McFarlane, EIS Coordinator, 3900 E. Idaho St., Elko, NV 89801.

The FEIS and ROD are available for inspection at the following locations: BLM State Office (Reno), BLM Elko District Office, Carson City library, Elko County library, the University of Nevada libraries in Reno and Las Vegas, and the Great Basin College library (Elko).

FOR FURTHER INFORMATION CONTACT: For additional information, write to the above address or call Deb McFarlane at (702) 753–0200.

Dated: May 31, 1996.

Helen Hankins,

District Manager.

[FR Doc. 96–14337 Filed 6–06–96; 8:45 am]

BILLING CODE 4310–HC–P

[CA–010–1430–01; CACA 7623, CACA 7870, CACA 7930]

Public Land Order No. 7199; Revocation of Secretarial Order Dated June 6, 1922, and Partial Revocation of Executive Order Dated December 31, 1912; California

AGENCY: Bureau of Land Management, Interior.

ACTION: Public land order.

SUMMARY: This order revokes, in its entirety, a Secretarial Order as it affects 21.50 acres of public lands withdrawn for Power Site Classification No. 43. This order also revokes an Executive Order insofar as it affects 60 acres of public lands withdrawn for Power Site Reserve No. 328. This action is necessary to permit completion of a land exchange under Section 206 of the Federal Land Policy and Management Act of 1976. This action will open the lands to surface entry unless closed by overlapping withdrawals or temporary segregations of record. The lands have been and will remain open to mineral leasing, but they are closed to mining due to being located within a power project withdrawal. The Federal Energy Regulatory Commission has concurred with this action.

EFFECTIVE DATE: September 6, 1996.

FOR FURTHER INFORMATION CONTACT: Duane Marti, BLM California State Office (CA–931.4), 2800 Cottage Way, Sacramento, CA 95825, 916–979–2858.

By virtue of the authority vested in the Secretary of the Interior by Section 204 of the Federal Land Policy and Management Act of 1976, 43 U.S.C. 1714 (1988), it is ordered as follows:

1. The Secretarial Order dated June 6, 1922, which withdrew public lands for Power Site Classification No. 43, and the Executive Order dated December 31, 1912, which withdrew public lands for Power Site Reserve No. 328, are hereby revoked insofar as they affect the following described lands:

Mount Diablo Meridian

T. 4 S., R. 15 E.,
Sec. 14, E½SE¼SE¼;
Sec. 23, NE¼SE¼.
T. 5 S., R. 15 E.,
Sec. 3, lots 7 to 15, inclusive (formerly lot 2).

The areas described aggregate 81.50 acres in Mariposa County.

2. The State of California has a preference right for public highway rights-of-way or material sites for a period of 90 days from the date of publication of this order and any location, entry, selection, or subsequent patent shall be subject to any rights granted the State as provided by the Act of June 10, 1920, Section 24, as amended, 16 U.S.C. 818 (1988).

3. At 10 a.m. on September 6, 1996, the lands will be opened to the operation of the public land laws generally, subject to valid existing rights, the provision of existing withdrawals, other segregations of record, and the requirements of applicable law. All valid applications received at or prior to 10 a.m. on September 6, 1996, shall be considered as simultaneously filed at that time. Those received thereafter shall be considered in the order of filing.

Dated: May 29, 1996.

Bob Armstrong,

Assistant Secretary of the Interior.

[FR Doc. 96–14344 Filed 6–6–96; 8:45 am]

BILLING CODE 4310–40–P

[ES–020–4210–01; FL–ES–041063]

Public Land Order No. 7148; Revocation of Executive Order Dated February 1, 1886; Florida; Correction

AGENCY: Bureau of Land Management, DOI.

ACTION: Correction.

SUMMARY: This action corrects Public Land Order No. 7148, 60 FR 36736, published July 18, 1995, as FR Doc. 95–17512.

On page 36736, column 2, under T. 27 S., R., 15 E., which reads ''sec 1'' is hereby corrected to read ''sec. 6''.

Dated: May 29, 1996.

Bruce E. Dawson,

District Manager.

[FR Doc. 96–14338 Filed 6–6–96; 8:45 am]

BILLING CODE 4310–GJ–P–M

[CA–017–1430–01; CACA 3511, CACA 3512, CAS 4427, CAS 5594]

Notice of Realty Action: Classification for Conveyance and Intent To Convey Lands for Landfill Purposes, Mono County, CA

AGENCY: Bureau of Land Management, Interior.

ACTION: Classification of Suitability for Conveyance and Intent to Convey Lands for Landfill Purposes.

SUMMARY: The County of Mono has requested that the four landfills currently leased (total of 93.56 acres) from the Bureau of Land Management be patented to the County under the authority of the Recreation and Public Purposes Act of June 14, 1926, as amended. It is in the Public's interest to classify the lands as suitable for conveyance. Pending the completion of the Environmental Assessment and the Landfill Transfer Audit (LTA), it is the Intent of the Bureau of Land Management to Convey the lands to the County of Mono. The Classification and Intent to Convey involves the following lands located in the County of Mono, California:

Federal Lands, to be Conveyed to the County of Mono:

Mount Diablo Meridian, California,

T. 8 N., R. 23 E.,
Sec. 9, Lot 3; (Walker).
T. 5 N., R. 25 E.,
Sec. 28, E½NW¼NE¼, W½NE¼NE¼; (Bridgeport).
T. 1 S., R. 32 E.,
Sec. 32, NW¼NW¼SE¼; (Benton).
T. 5 S., R., 33 E.,
Sec. 9, NW¼SW¼NE¼; (Chalfant).

containing 93.56 acres more or less.

SUPPLEMENTARY INFORMATION: The landfills known as Walker and Bridgeport were classified for lease for landfill purposes and have been leased since 1974. The Benton and Chalfant landfills and were classified for lease for landfill purposes and have been leased since 1983. The County of Mono is a qualified applicant for conveyance. The Classification of suitable for Conveyance stems from the Bishop Resource Management Plan Record of Decision dated March 25, 1993. The Decision identified the lands for disposal for landfill purposes. Final determination on the Intent to Convey will made using public comments, an environmental assessment and a Landfill Transfer Audit (LTA). The conveyance document (patent) for the Federal public lands will include the following terms, conditions or reservations to the United States:

1. ''A right-of-way thereon for ditches or canals constructed by the authority of the United States. Act of August 30, 1890 (43 U.S.C. 945).''

2. Provisions of the R&PP Act and applicable regulations of the Secretary of the Interior.

3. All valid and existing rights documented on the official public land records at the time of patent issuance.

4. All minerals shall be reserved to the United States, together with the right to prospect for, mine, and remove the minerals. Upon publication of this Notice in the Federal Register, the public lands described above are segregated from all forms of appropriation under the public land laws, including the mineral laws for a period of five years from the date of publication. The segregative effect shall terminate as provided by 43 CFR 2201.1(c).

Detailed information concerning the Classification or the Intent to Convey is available at the Bishop Resource Area Office, 785 N. Main St. Suite E, Bishop, CA 93514 or by contacting Larry Primosch at (619) 872–4881. For a period of 45 days after the initial publication of this notice in the Federal Register, interested parties may submit comments to the Area Manager, Bishop Resource Area at the above address.

CLASSIFICATION COMMENTS: Interested parties may submit valid comments on the suitability of the landfills for Classification to Convey.

CONVEYANCE/ENVIRONMENTAL ASSESSMENT/LTA COMMENTS: Interested parties may submit valid comments on the Intent to Convey and the associated Environmental Assessment and Landfill Transfer Audit.

Dated: May 31, 1996.

Douglas S. Dodge,

Acting Area Manager, Bishop Resource Area.

[FR Doc. 96–14410 Filed 6–6–96; 8:45 am]

BILLING CODE 4310–40–P

Bureau of Land Management

[MT–020–1610–00]

Notice of Availability

AGENCY: Bureau of Land Management, Miles City District, Montana, Interior.

ACTION: Notice.

SUMMARY: In accordance with Section 202 of the Federal Land Policy and Management Act of 1976 and section 102(2)(C) of the National Environmental Policy Act of 1969, a supplement to the Big Dry Resource Management Plan and Environmental Impact Statement (RMP/EIS) has been prepared for the Calypso Trail, Big Dry Resource Area. The 1996 Calypso Trail Supplement to the Big Dry RMP/EIS describes and analyzes future options for management of the Calypso Trail.

Management for the Calypso Trail was addressed in the 1993 Draft Big Dry RMP/EIS and the 1995 Proposed Big Dry RMP and Final EIS. Eight protests, some with multiple signatures, were received by the Director, protesting the Calypso Trail decision. In May 1996, a Record of Decision was issued approving all of the decisions made in the 1995 Proposed Big Dry RMP and Final EIS with one exception, the decision pertaining to management of Calypso Trail.

Further planning was conducted in late 1995 for the Calypso Trail. A Notice of Intent to conduct further planning was issued in the Federal Register October 4, 1995. The notice also informed the public that comments, concerns, or information would be considered until November 13, 1995. The notice announced an open house meeting, held October 19, 1995 in Miles City. Written comments were received from organizations and individuals. All comments were considered during the preparation of the Supplement.

Reading copies will be available at the Custer, Prairie, and Fallon County public libraries and at the following Bureau of Land Management locations: Office of External Affairs, Main Interior Building, Room 5800, 18th and C Streets NW., Washington, DC; External Affairs Office, Montana State Office, 222 North 32nd Street, Billings, MT; and Miles City District Office, 111 Garryowen Road, Miles City, MT.

The RMP process includes an opportunity for review through a plan protest to the Bureau of Land

Management's Director. Any person or organization who participated in the planning process and has an interest which is, or may be, adversely affected by approval of this Supplement to the RMP may protest the plan. Careful adherence to the following guidelines will assist in preparing a protest:

- Only those persons or organizations who participated in the planning process may protest.
- A protesting party may raise only those issues which were commented on during the planning process.
- Additional issues may be raised at any time and should be directed to the Miles City District for consideration in plan implementation, as potential plan amendments, or as otherwise appropriate.

In order to be considered complete, a protest must contain, at a minimum, the following information:

1. The name, mailing address, telephone number, and interest of the person filing the protest.
2. A statement of the issue being protested.
3. A statement of the portion of the plan being protested. To the extent possible, this should be done by reference to the specific pages, paragraphs, and sections in the proposed management plan.
4. A copy of all documents addressing the issue submitted during the planning process or a reference to the date the issue was discussed for the record.
5. A concise statement explaining why the BLM State Director's decision is believed to be incorrect is a critical part of the protest. Take care to document all relevant facts and references or cite the planning documents, environmental analysis documents, and available planning records (meeting minutes, summaries, correspondence). A protest without any data will not provide the BLM with sufficient information, and the Director's review will be based on existing analysis and supporting data.

DATES: The period for filing protests begins when the Environmental Protection Agency publishes a Notice of Receipt of the Supplement in the Federal Register. The protest period lasts 30 days and there is no provision for any time extension. To be considered ''timely'' the protest must be postmarked no later than the last day of the 30-day protest period. Although not a requirement, sending a protest by certified mail, return receipt requested, is recommended.

ADDRESSES: All protests must be filed in writing to: Director (480), Bureau of Land Management, Resource Planning Team, 1849 C Street NW., Washington, DC 20240.

FOR FURTHER INFORMATION CONTACT: Mary Bloom, RMP/EIS Team Leader, Miles City District Office, 111 Garryowen Road, Miles City, MT 59301, (406) 232–4331.

SUPPLEMENTARY INFORMATION: The Calypso Trail is a road that separates two roadless areas that make up the Terry Badlands Wilderness Study Area. The Supplement analyzes four alternatives to resolve management for the Calypso Trail: Alternative A is existing management where off-road vehicle use is allowed on the Calypso Trail. Under Alternative B, off-road vehicle use would be closed on the Calypso Trail, which by definition closes the road to motorized vehicles, except for authorized use. Alternative C is the same as Alternative A. The proposed decision, Alternative D, is to manage Calypso Trail as was presented in the 1993 Draft Big Dry RMP/EIS. BLM proposes to keep the trail open to motorized vehicles and off-road vehicle use would be limited to the trail itself.

Dated: May 15. 1996.

Glenn A. Carpenter,

District Manager.

[FR Doc. 96–12960 Filed 6–6–96; 8:45 am]

BILLING CODE 4310–DN–P

Minerals Management Service

Agency Information Collection Activities; Proposed Collection; Comment Request

AGENCY: Minerals Management Service, Interior.

ACTION: Notice.

SUMMARY: As part of its continuing effort to reduce paperwork and respondent burden, the Minerals Management Service (MMS) invites the public and other Federal agencies to comment on a request to reinstate with change a collection of information contained in an interim final rule for 30 CFR Part 203, Relief or Reduction in Royalty Rates.

DATES: Submit written comments by August 6, 1996.

ADDRESSES: Direct all written comments to the Department of the Interior; Minerals Management Service; Mail Stop 4700; 381 Elden Street; Herndon, Virginia 22070–4817; Attention: Chief, Engineering and Standards Branch.

FOR FURTHER INFORMATION CONTACT: Marshall Rose, Chief, Economic Evaluation Branch, Resource Evaluation Division, Minerals Management Service, telephone (703) 787–1536.

SUPPLEMENTARY INFORMATION:

Title: 30 CFR Part 203, Relief or Reduction in Royalty Rates.

Abstract: The Outer Continental Shelf Lands Act (OCSLA) and the Deep Water Royalty Relief Act (DWRRA) give the Secretary of the Interior the authority to reduce or eliminate royalty or any net profit share set forth in Outer Continental Shelf (OCS) oil and gas leases to promote increased production.

MMS is issuing an interim rule to establish the terms and conditions for granting reductions in royalty rates under the OCSLA and royalty suspension volumes under the DWRRA for certain leases in existence before November 28, 1995. It also defines the information required for a complete application as required by 43 U.S.C. 1337(a)(3)(C). The interim final rule was published in the Federal Register on May 31, 1996 (61 FR 27263).

The MMS uses the information to determine whether granting a royalty relief request will result in the production of resources that would not be produced without such relief. An application for royalty relief must contain sufficient financial, economic, reservoir, geologic and geophysical, production, and engineering data and information for MMS to determine whether relief should be granted according to applicable law. The application also must be sufficient to determine whether the requested relief will result in an ultimate increase in resource recovery and receipts to the Federal Treasury and provide for reasonable returns on project investments.

The applicant's requirement to respond is related only to a request to obtain royalty relief. The applicant has no obligation to make such a request. The Paperwork Reduction Act of 1995 provides that an agency may not conduct or sponsor, and a person is not required to respond to a collection of information unless it displays a currently valid Office of Management and Budget (OMB) control number.

The MMS requested OMB to approve emergency processing of this collection of information to coincide with the effective date of the interim final rule. This notice provides the full notice and comment period requirement.

Description of Respondents: Federal OCS oil and gas lessees.

Frequency: On occasion.

Estimated Number of Respondents: 130 lessees making an estimated 54 applications per year.

Estimate of Burden: Average of 835 hours per response.

Estimate of Total Annual Burden Hours: 45,080 burden hours.

Estimate of Total Annual Cost to Respondents for Hour Burdens: Based on $35 per hour, the total cost to lessees is estimated to be $1,577,800.

Estimate of Total Other Annual Costs to Respondents:

There are two other known cost burdens to the respondents.

(a) We will charge lessees (respondents) applying for royalty relief an amount which covers the cost of processing their applications. We estimate that our costs for processing OCSLA applications will range from $8,500 (continuation of production) to $22,500 (project involving capital expansion). We estimate that our costs for processing DWRRA applications will range from $27,500 to $50,000, depending on the number of leases involved and the complexity of the proposed development project. For some applications (approximately 30 percent; average of 9 per year), we may need to audit the financial data to make an adequate determination on the economics of the proposed development. We estimate an audit to cost up to $40,000. We will issue a Notice to Lessees (NTL) that will provide more detailed information on the amounts of royalty relief application processing costs, and when and how payments are to be made to us for this purpose. We will revise the NTL periodically to reflect our cost experience and to provide other information necessary for the administration of this program. An application processing cost would average $30,000 for an estimated burden of $1,620,000 ($30,000 × 54 applications=$1,620,000).

(b) A respondent's application or pre-production report must be accompanied by a report prepared by an independent certified public accountant as described in § 203.55(c) of the rule. The OCSLA applications will require this report only once; the DWRRA applications will require this report at two stages (redetermination and short form applications are excluded). We estimate an average cost for a report will be $175,000. The estimated burden is $7,175,000 ($175,000 × 41 applications=$7,175,000).

Type of Request: Reinstatement with change.

OMB Number: 1010–0071.

Form Number: N/A.

Comments: MMS will summarize written responses to this notice and address them in the regular request for a 3-year OMB approval. Your comments will also be considered as MMS develops the final rule for 30 CFR Part 203. All comments will become a matter of public record.

(1) MMS specifically solicits comments on the following questions:

(a) Is the proposed collection of information necessary for the proper performance of MMS's functions, and will it be useful?

(b) Are the estimates of the burden hours of the proposed collection reasonable?

(c) Do you have any suggestions that would enhance the quality, clarity, or usefulness of the information to be collected?

(d) Is there a way to minimize the information collection burden on those who are to respond, including through the use of appropriate automated electronic, mechanical, or other forms of information technology?

(2) In addition, the Paperwork Reduction Act of 1995 requires agencies to estimate the total annual cost burden to respondents or recordkeepers resulting from the collection of information. MMS needs your comments on this item. Your response should split the cost estimate into two components:

(a) Total capital and startup cost component and

(b) Annual operation, maintenance, and purchase of services component.

Your estimates should consider the costs to generate, maintain, and disclose or provide the information. You should describe the methods you use to estimate major costs factors, including system and technology acquisition, expected useful life of capital equipment, discount rate(s), and the period over which you incur costs. Capital and startup costs include, among other items, computers and software you purchase to prepare for collecting information; monitoring, sampling, drilling, and testing equipment; and record storage facilities. Generally, your estimates should not include equipment or services purchased: (1) Before October 1, 1995; (2) to comply with requirements not associated with the information collection; (3) for reasons other than to provide information or keep records for the Government; (4) or as part of customary and usual business or private practices.

Bureau Clearance Officer: Carole A. deWitt, (703) 787–1242.

Dated: May 23, 1996.

Henry G. Bartholomew,

Deputy Associate Director for Operations and Safety Management.

[FR Doc. 96–14268 Filed 6–6–96; 8:45 am]

BILLING CODE 4810–MR–M

National Park Service

Lake Crescent Management Plan/ Environmental Impact Statement, Olympic National Park, WA

AGENCY: National Park Service, DOI.

ACTION: Notice of Intent to Prepare an Environmental Impact Statement.

SUMMARY: In January 1995, the National Park Service began the preparation of an environmental assessment (EA) to analyze the environmental effects of implementing various alternatives of a proposed management plan for Lake Crescent in Olympic National Park, Washington. As work on the EA progressed, it became apparent that some of the alternatives under consideration had the potential for significant environmental impacts, so a decision was made to prepare an environmental impact statement (EIS) instead of an EA.

Scoping is the term given to the process by which the scope of issues to be addressed in the plan/EIS is identified. A public scoping meeting for the plan and EA was initially conducted in Port Angeles, Washington, on July 11, 1995. In addition, public comment was solicited at several information boards at key sites around Lake Crescent during the summer of 1995. Information gained from those sources will be used in the plan/EIS, but no additional public scoping meetings will be held. However, representatives of Federal, State and local agencies, American Indian tribes, private organizations and individuals from the general public who may be interested in or affected by the proposed plan/EIS are invited to participate in the scoping process by responding to this Notice with written comments. All comments received will become part of the public record and copies of comments, including names, addresses and telephone numbers provided by respondents, may be released for public inspection.

The proposed plan and accompanying EIS will help guide the management of recreational uses of Lake Crescent and the surrounding watershed for the next 15–20 years. The management plan/EIS will describe a range of alternatives formulated to address major issues relating to visitor use and resource management and protection. A ''no action'' alternative will be included; other likely alternatives could include ones with a recreation use emphasis, preservation emphasis and/or some balanced combination of use and resource preservation. The environmental impacts associated with each alternative will be analyzed.

The draft plan/EIS is expected to be available for public review by October 1996; the final plan/EIS and Record of Decision are expected to be completed approximately six months later.

The responsible official is Stanley T. Albright, Field Director, Pacific West Area, National Park Service.

DATE: Written comments about the scope of issues and alternatives to be analyzed in the plan/EIS should be received no later than July 19, 1996.

ADDRESS: Written comments concerning the plan/EIS should be sent to Superintendent, Olympic National Park, 600 E. Park Ave., Port Angeles, WA 98284.

FOR FURTHER INFORMATION CONTACT: Superintendent, Olympic National Park, at the above address or at telephone number (360) 452–4501.

Dated: May 31, 1996.

William C. Walters,

Deputy Field Director, Pacific West Area, National Park Service.

[FR Doc. 96–14317 Filed 6–6–96; 8:45 am]

BILLING CODE 4310–70–M

Greene Township—Conococheague Rural Historic District; Determination of Eligibility for the National Register of Historic Places

ACTION: Request for comments.

On August 3, 1995, the Greene Township—Conococheague Rural Historic District, Franklin County, Pennsylvania was determined eligible for the National Register of Historic Places for its historic and architectural importance, following a request from the Federal Highway Administration. The district consists of a landscape farmed continuously since the eighteenth century and reflects the agricultural patterns of the rich Cumberland Valley. Important features found in the district include intact farmsteads, with their significant collection of barns, farmhouses and outbuildings, the field patterns, fencerows, the network of the historic farm roads, and the remains of the once active and important industrial activities performed along Conococheague Creek. The finding of eligibility was based upon review of documentation submitted by the Federal Highway Administration, the Pennsylvania Historical and Museum Commission, and Greene Township.

Since the determination of eligibility was made, property owners within the district, the Federal Highway Administration, and township officials have written to us either endorsing or disagreeing with the determination of eligibility. In order to accommodate those who wish to provide new information on whether or not this property meets the National Register Criteria for Evaluation, the National Park Service is providing a 60 day comment period. A written statement on the determination of eligibility will be issued by the National Park Service within 30 days of the close of the comment period.

The determination of eligibility remains in effect pending review of responses submitted during the comment period. To determine that the property is not eligible or to revise the boundary, the National Park Service must receive authoritative information, which evaluated in conjunction with documentation already on file, results in a finding that the property does not meet the National Register Criteria for Evaluation or that the boundary does not accurately delineate the historic district in accordance with established National Register standards.

Comments should be addressed to the National Register of Historic Places, National Park Service, P.O. Box 37127, Washington, D.C. 20013–7127.

Carol D. Shull,

Keeper of the National Register of Historic Places, National Register, History and Education.

[FR Doc. 96–14316 Filed 6–6–96; 8:45 am]

BILLING CODE 4310–70–P

Notice of Intent to Repatriate a Cultural Item in the Possession of the Eiteljorg Museum of American Indians and Western Art, Indianapolis, IN

AGENCY: National Park Service

ACTION: Notice

Notice is hereby given under the Native American Graves Protection and Repatriation Act, 25 U.S.C. 3005(a)(2), of the intent to repatriate a cultural item in the possession of the Eiteljorg Museum of American Indians and Western Art which meets the definition of ''cultural patrimony'' under Section 2 of the Act.

The cultural item is a Tlingit clan hat. This red, green, and black painted cedar hat is topped with a carved Murrelet bird with wings of human hair.

The Eiteljorg Museum's accession records indicate this hat was acquired by Mr. Harrison Eiteljorg from an unconfirmed source no later than 1982; and donated to the Eiteljorg Museum in 1987. This hat is presumed to have been alienated from the community during the 1970s or early 1980s.

Consultation evidence indicates the Murrelet on this hat serves as a crest symbol for the Brown Bear House of the Kaagwaantaan Clan of Tlingit Indians. According to Tlingit law, crests are the property of the clan and not of any specific individual. Representatives of the Chilkoot Indian Association on behalf of the Brown Bear House of the Kaagwaantaan Clan of Tlingit Indians have stated further that the Murrelet crest has been used during the historic period by the Brown Bear House in care of appointed trustees who cannot make independent decisions regarding the alienation of clan property.

Based on the above-mentioned information, officials of the Eiteljorg Museum of American Indians and Western Art have determined that, pursuant to 25 U.S.C. 3001 (3)(D), these cultural items have ongoing historical, traditional, and cultural importance central to the culture itself, and could not have been alienated, appropriated, or conveyed by any individual. Officials of the Eiteljorg Museum of American Indians and Western Art have also determined that, pursuant to 25 U.S.C. 3001 (2), there is a relationship of shared group identity which can be reasonably traced between these items and the Brown Bear House of the Kaagwaantaan Clan of Tlingit Indians.

This notice has been sent to officials of the Chilkoot Indian Association acting on behalf of the Brown Bear House of the Kaagwaantaan Clan of Tlingit Indians. Representatives of any other Indian tribe that believes itself to be culturally affiliated with these objects should contact Robert B. Tucker, Eiteljorg Museum of American Indians and Western Art, 500 West Washington St., Indianapolis, IN 46204, telephone (317) 636–9378 before *[thirty days following publication in the* Federal Register]. Repatriation of these objects to the Chilkoot Indian Association representing the interests of the Brown Bear House of the Kaagwaantaan Clan of the Tlingit Indians may begin after that date if no additional claimants come forward.

Dated: June 3, 1996.

Veletta Canouts,

Acting Departmental Consulting Archeologist,

Deputy Chief, Archeology and Ethnography Program.

[FR Doc. 96–14408 Filed 6–6–96; 8:45 am]

BILLING CODE 4310–70–F

National Park Service To Update Planning Process Guidelines

The National Park Service is updating its Park Planning Guidelines. The purpose of this update is to document a concise, agreed-upon planning

philosophy and approach to the major components of NPS planning, focusing on results rather than procedures. The revised guideline is expected to help streamline internal procedures, and will replace the current Planning Process Guideline (NPS–2) that was adopted in 1982. The current guideline addresses the basic framework for NPS planning: Statements for Management, General Management Plans, Development Concept Plans, and studies of potential new parks or other designations. More detailed instructions for operational and implementation plans addressing natural and cultural resources, concessions, interpretation and other functions is provided in directives and guidelines for those program areas. The intended outcomes to be produced by the revised Planning Process Guideline are:

—shared understanding about the purposes of planning in the National Park Service, recognizing that planning is an iterative process that provides the rationale for effective and accountable decisionmaking at all levels of the organization

—comprehensive knowledge of the basic elements of the NPS planning process, including why each element is important, and the kind and level of information each element contains

—the relationships and linkages among the various planning products and services produced in parks or central and field offices, and the appropriate level of consistency for products needed to comply with legal mandates that apply Servicewide

—guidance regarding roles and responsibilities for planning and compliance with applicable laws, regulations and management policies

—an agreed upon common nomenclature of planning terms to facilitate communications within the agency and with Congress and the public

The updated guideline will not be a detailed prescription for how to plan. In keeping with the governmentwide goals of streamlining and reengineering work processes, the guideline will focus on the intended outcomes of planning and on criteria for evaluating when those outcomes have been achieved. Practitioners will have flexibility to adapt processes to their particular circumstances.

Organizations and individuals with an interest in NPS planning will have an opportunity to review and comment on a draft of the guideline in midsummer. A review draft is scheduled to be available by July 30, with comments due within 30 days. Following the public comment period the guideline will be revised and is scheduled for completion by September 30, 1996.

The draft guideline will be posted on the Internet (www.nps.gov/planning). If you are not able to access this information by Internet and would like to receive a copy through the mail, please contact Warren Brown, Chief, Division of Park Planning and Special Studies, National Park Service, Room 3230, Department of the Interior, P.O. Box 37127 Washington, D.C. 20013–7127. For additional information about the scope of the guideline, please contact Gail Slemmer, (303) 969–2686 or Jan Harris, (303) 969–2435 in the National Park Service's Denver Service Center.

Anyone having information that should be considered during the initial drafting of the policy and guideline is urged to send concise statements of that information to Warren Brown at the address listed above. Please confine your comments to general planning theories and approaches, or to general comments about the context for NPS planning, since the guideline will not address specific parks, issues or situations. Questions or comments about specific park plans should be addressed to the park superintendent for that unit.

This update of the planning process guideline will be coordinated with other ongoing efforts to revise NPS guidelines for the National Environmental Policy Act (NPS–12) and other related planning processes including natural and cultural resource management plans.

Date: May 31, 1996.

Denis P. Galvin,

Associate Director, Professional Services, Washington Office.

[FR Doc. 96–14315 Filed 6–6–96; 8:45 am]

BILLING CODE 4310–70–P

DEPARTMENT OF JUSTICE

Drug Enforcement Administration

Importer of Controlled Substances; Notice of Registration

By Notice dated April 1, 1996, and published in the Federal Register on April 8, 1996, (61 FR 15523), Stepan Company Natural Products Department, 100 W. Hunter Avenue, Maywood, New Jersey 07607, made application to the Drug Enforcement Administration (DEA) to be registered as an importer of a basic classes of controlled substances listed below:

Drug	Schedule
Coca Leaves (904)	II
Cocaine (9041)	II
Benzoylecgonine (9180)	II

No comments or objections have been received. DEA has considered the factors in Title 21, United States Code, Section 823(a) and determined that the registration of Stepan Company Natural Products Department to import coca leaves, cocaine and benzoylecgonine is consistent with the public interest and with Untied States obligations under international treaties, conventions, or protocols in effect on May 1, 1971, at this time. Therefore, pursuant to Section 1008(a) of the Controlled Substances Import and Export Act and in accordance with Title 21, Code of Federal Regulations, Section 1311.42, the above firm is granted registration as an importer of the basic classes of controlled substances listed above.

Dated: May 22, 1996.

Gene R. Haislip,

Deputy Assistant Administrator, Office of Diversion Control; Drug Enforcement Administration.

[FR Doc. 96–14413 Filed 6–6–96; 8:45 am]

BILLING CODE 4410–09–M

Office of Justice Programs

National Institute of Justice

[OJP (NIJ) No. 1075]

RIN 1121–ZA30

National Institute of Justice Solicits Proposals for Executive Seminar Series on Sentencing and Corrections 1996

AGENCY: U.S. Department of Justice, Office of Justice Programs, National Institute of Justice.

ACTION: Announcement of the availability of the National Institute of Justice (NIJ) Solicitation ''NIJ Solicits Proposals for Executive Seminar Series on Sentencing and Corrections.''

ADDRESS: National Institute of Justice, 633 Indiana Avenue, NW., Washington, D.C. 20531.

DATE: The deadline for receipt of proposals is close of business on July 29, 1996.

FOR FURTHER INFORMATION CONTACT: John Spevacek at (202) 307–0466, National Institute of Justice, 633 Indiana Avenue, NW., Washington, DC 20531.

SUPPLEMENTARY INFORMATION: The following supplementary information is provided:

Authority

This action is authorized under the Omnibus Crime Control and Safe Streets Act of 1968, §§ 201–03, as amended, 42 U.S.C. §§ 3721–23 (1988).

Background

The National Institute of Justice is soliciting proposals to provide conceptual and administrative direction to a research forum on the interdependent relationship between sentencing policy and correctional practice. It is anticipated that the ''Executive Seminar on Sentencing and Corrections'' will meet six times in 3 years. Awardees will be expected to help NIJ select the membership of the Executive Seminar, which will be a core group of 20 to 30 individuals with expertise in sentencing, corrections, and public policy analysis; assist NIJ and the Executive Seminar in developing specific issue areas to be discussed; provide professional and support staff to the Executive Seminar; manage and facilitate the meetings, including logistical requirements; contribute conceptual and editorial support in the commissioning and publication of papers, and provide routine administrative and financial oversight to the project.

This solicitation is open to educational institutions with doctoral programs in criminal justice or public policy analysis and to law schools.

Interested organizations should call the National Criminal Justice Reference Service (NCJRS) at 1–800–851–3420 to obtain a copy of ''NIJ Solicits Proposals for Executive Seminar Series'' (refer to document no. SL000155).

The solicitation is available electronically via the NCJRS Bulletin Board, which can be accessed via Internet. Telnet to ncjrsbbs.aspensys.com, or gopher to ncjrs.aspensys.com 71. For World Wide Web access, connect to the NCJRS Justice Information Center at http://www.ncjrs.org. Those without Internet access can dial the NCJRS Bulletin Board via modem: dial 301–738–8895. Set modem at 9600 baud, 8–N–1.

Jeremy Travis,

Director, National Institute of Justice.

[FR Doc. 96–14435 Filed 6–6–96; 8:45 am]

BILLING CODE 4410–18–P

DEPARTMENT OF LABOR

Office of the Secretary

Submission for OMB Review; Comment Request

June 4, 1996.

The Department of Labor (DOL) has submitted the following public information collection requests (ICRs) to the Office of Management and Budget (OMB) for review and approval in accordance with the Paperwork Reduction Act of 1995 (P.L. 104–13, 44 U.S.C. Chapter 35). Copies of these individual ICRs, with applicable supporting documentation, may be obtained by calling the Department of Labor Acting Department Clearance Officer, Theresa M. O'Malley ({202} 219–5095). Individuals who use a telecommunications device for the deaf (TTY/TDD) may call {202} 219–4720 between 1 p.m. and 4 p.m. Eastern time, Monday through Friday.

Comments should be sent to Office of Information and Regulatory Affairs, Attn: OMB Desk Officer for (BLS/DM/ESA/ETA/OAW/MSHA/OSHA/PWBA/VETS), Office of Management and Budget, Room 10235, Washington, DC 20503 ({202} 395–7316), within 30 days from the date of this publication in the Federal Register.

The OMB is particularly interested in comments which:

* evaluate whether the proposed collection of information is necessary for the proper performance of the functions of the agency, including whether the information will have practical utility;
* evaluate the accuracy of the agency's estimate of the burden of the proposed collection of information, including the validity of the methodology and assumptions used;
* enhance the quality, utility, and clarity of the information to be collected; and
* minimize the burden of the collection of information on those who are to respond, including through the use of appropriate automated, electronic, mechanical, or other technological collection techniques or other forms of information technology, e.g., permitting electronic submission of responses.

Agency: Employment Standards Administration.

Title: Report of Construction Contractor's Wage Rates.

OMB Number: 1215–00046.

Agency Number: WD–10.

Frequency: On occasion.

Affected Public: Business or other for-profit.

Number of Respondents: 37,500.

Estimated Time Per Respondent: 20 minutes.

Total Burden Hours: 25,000.

Total Annualized capital/startup costs: $0.

Total annual costs (operating/maintaining systems or purchasing services): $0.

Description: The Form WD–10 is used by the Department of Labor to elicit construction project data from contractor associations, contractors and unions. The wage data is used to determine locally prevailing wages under the Davis-Bacon and Related Acts.

Agency: Employment Standards Administration.

Title: Report of Changes that May Affect Your Black Lung Benefits.

OMB Number: 1215–0084.

Agency Number: CM–929.

Frequency: Biennially.

Affected Public: Individuals or households.

Number of Respondents: 35,000.

Estimated Time Per Respondent: 5 to 8 minutes.

Total Burden Hours: 3,092.

Total Annualized capital/startup costs: $0.

Total annual costs (operating/maintaining systems or purchasing services): $0.

Description: This information is used to help determine continuing eligibility of primary beneficiaries receiving black lung benefits from the Disability Trust Fund. It is also used to verify and update on a regular basis factors that affect a beneficiary's entitlement to benefits, including income, marital status, receipt of State Workers' Compensation, and dependent status.

Agency: Employment Standards Administration.

Title: Notice of Recurrence of Disability and Claim for Continuation of Pay/Compensation.

OMB Number: 1215–0167.

Agency Number: CA–2a.

Frequency: 1 time per recurrence of disability.

Affected Public: Individuals or households.

Number of Respondents: 550.

Estimated Time Per Respondent: 30 minutes.

Total Burden Hours: 275.

Total Annualized capital/startup costs: $0.

Total annual costs (operating/maintaining systems or purchasing services: $192.50.

Description: The CA–2a is used by current, or occasionally former Federal employees to claim wage loss or

medical treatment resulting from a recurrence of a work-related injury while Federally employed. The information is necessary to ensure the accurate payment of benefits.

Agency: Employment Standards Administration.

Title: Family Medical Leave Act of 1993, 29 CFR Part 825.

OMB Number: 1215–0181.

Frequency: Recordkeeping; third party disclosure; reporting on occasion.

Affected Public: Individuals or households; Business or other for-profit; Not-for-profit institutions; Farms; State, Local or Tribal Government.

Number of Respondents: 3,900,000.

Estimated Time Per Respondent: 1 to 10 minutes.

Total Burden Hours: 9,142,500.

Total Annualized capital/startup costs: $0.

Total annual costs (operating/maintaining systems or purchasing services: $0.

Description: The Family Medical Leave Act of 1993 (FMLA) requires private sector employees of 50 or more employees, and public agencies to provide up to 12 weeks of unpaid, job-protected leave to ''eligible'' employees for certain family and medical reasons. Records are required so that the Department of Labor can determine employer compliance with the FMLA.

Agency: Employment Standards Administration.

Title: Rehabilitation Action Report.

OMB Number: OWCP–44.

Agency Number: 1215–0182.

Frequency: On occasion.

Affected Public: Individuals or households; Business or other for-profit.

Number of Respondents: 7,000.

Estimated Time Per Respondent: 30 minutes.

Total Burden Hours: 3,500.

Total Annualized capital/startup costs: $0.

Total annual costs (operating/maintaining systems or purchasing services: $0.

Description: The OWCP–44 is the rehabilitation action report submitted by the rehabilitation counselor to report transition periods in the vocational rehabilitation process and to request prompt claims adjudicatory action.

Theresa M. O'Malley,

Acting Departmental Clearance Officer.

[FR Doc. 96–14422 Filed 6–6–96; 8:45 am]

BILLING CODE 4510–27–M

Employment Standards Administration

Wage and Hour Division; Minimum Wages for Federal and Federally Assisted Construction; General Wage Determination; Decisions

General wage determination decisions of the Secretary of Labor are issued in accordance with applicable law and are based on the information obtained by the Department of Labor from its study of local wage conditions and data made available from other sources. They specify the basic hourly wage rates and fringe benefits which are determined to be prevailing for the described classes of laborers and mechanics employed on construction projects of a similar character and in the localities specified therein.

The determinations in these decisions of prevailing rates and fringe benefits have been made in accordance with 29 CFR Part 1, by authority of the Secretary of Labor pursuant to the provisions of the Davis-Bascon Act of March 3, 1931, as amended (46 Stat. 1494, as amended, 40 U.S.C. 276a) and of other Federal statutes referred to in 29 CFR Part 1, Appendix, as well as such additional statutes as may from time to time be enacted containing provisions for the payment of wages determined to be prevailing by the Secretary of Labor in accordance with the Davis-Bacon Act. The prevailing rates and fringe benefits determined in these decisions shall, in accordance with the provisions of the foregoing statutes, constitute the minimum wages payable on Federal and federally assisted construction projects to laborers and mechanics of the specified classes engaged on contract work of the character and in the localities described therein.

Good cause is hereby found for not utilizing notice and public comment procedure thereon prior to the issuance of these determinations as prescribed in 5 U.S.C. 553 and not providing for delay in the effective date as prescribed in that section, because the necessity to issue current construction industry wage determinations frequently and in large volume causes procedures to be impractical and contrary to the public interest.

General wage determination decisions, and modifications supersede as decisions thereto, contain no expiration dates and are effective from their date of notice in the Federal Register, or on the date written notice is received by the agency, whichever is earlier. These decisions are to be used in accordance with the provisions of 29 CFR Parts 1 and 5. Accordingly, the applicable decision, together with any modifications issued, must be made a part of every contract for performance of the described work within the geographic area indicated as required by an applicable Federal prevailing wage law and 29 CFR Part 5. The wage rates and fringe benefits, notice of which is published herein, and which are contained in the Government Printing Office (GPO) document entitled ''General Wage Determinations Issued Under The Davis-Bacon And Related Acts,'' shall be the minimum paid by contractors and subcontractors to laborers and mechanics.

Any person, organization, or governmental agency having an interest in the rates determined as prevailing is encouraged to submit wage rate and fringe benefit information for consideration by the Department. Further information and self-explanatory forms for the purpose of submitting this data may be obtained by writing to the U.S. Department of Labor, Employment Standards Administration, Wage and Hour Division, Division of Wage Determinations, 200 Constitution Avenue, N.W., Room S–3014, Washington, D.C. 20210.

Modifications to General Wage Determination Decisions

The number of decisions listed in the Governemnt Printing Office document entitled ''General Wage Determinations Issued Under the Davis-Bacon and Related Acts'' being modified are listed by Volume and State. Dates of publication in the Federal Register *are in parentheses following the decisions being modified.*

Volume I

Connecticut:
CT960001 (March 15, 1996)
CT960003 (March 15, 1996)
CT960004 (March 15, 1996)
CT960005 (March 15, 1996)
CT960006 (March 15, 1996)

New Jersey:
NJ960002 (March 15, 1996)
NJ960003 (March 15, 1996)
NJ960004 (March 15, 1996)
NJ960007 (March 15, 1996)
NJ960015 (March 15, 1996)

New York:
NY960008 (March 15, 1996)

Volume II

Pennsylvania:
PA960040 (March 15, 1996)

Volume III

Alabama:
AL960008 (March 15, 1996)
AL960025 (March 15, 1996)
AL960034 (March 15, 1996)
AL960044 (March 15, 1996)

Georgia:
GA960003 (March 15, 1996)
GA960004 (March 15, 1996)

GA960022 (March 15, 1996)
GA960031 (March 15, 1996)
GA960032 (March 15, 1996)
GA960050 (March 15, 1996)
GA960065 (March 15, 1996)
GA960073 (March 15, 1996)
GA960084 (March 15, 1996)
GA960085 (March 15, 1996)
GA960086 (March 15, 1996)
GA960087 (March 15, 1996)
GA960088 (March 15, 1996)

Kentucky:
KY960001 (March 15, 1996)
KY960002 (March 15, 1996)
KY960003 (March 15, 1996)
KY960004 (March 15, 1996)
KY960006 (March 15, 1996)
KY960007 (March 15, 1996)
KY960025 (March 15, 1996)
KY960027 (March 15, 1996)
KY960028 (March 15, 1996)
KY960029 (March 15, 1996)
KY960032 (March 15, 1996)
KY960033 (March 15, 1996)
KY960034 (March 15, 1996)
KY960035 (March 15, 1996)
KY960054 (March 15, 1996)

Volume IV

Illinois:
IL960001 (March 15, 1996)
IL960002 (March 15, 1996)
IL960003 (March 15, 1996)
IL960004 (March 15, 1996)
IL960005 (March 15, 1996)
IL960006 (March 15, 1996)
IL960008 (March 15, 1996)
IL960009 (March 15, 1996)
IL960010 (March 15, 1996)
IL960011 (March 15, 1996)
IL960012 (March 15, 1996)
IL960013 (March 15, 1996)
IL960014 (March 15, 1996)
IL960015 (March 15, 1996)
IL960016 (March 15, 1996)
IL960017 (March 15, 1996)
IL960020 (March 15, 1996)
IL960021 (March 15, 1996)
IL960022 (March 15, 1996)
IL960023 (March 15, 1996)
IL960024 (March 15, 1996)
IL960025 (March 15, 1996)
IL960026 (March 15, 1996)
IL960027 (March 15, 1996)
IL960028 (March 15, 1996)
IL960029 (March 15, 1996)
IL960031 (March 15, 1996)
IL960032 (March 15, 1996)
IL960033 (March 15, 1996)
IL960034 (March 15, 1996)
IL960036 (March 15, 1996)
IL960037 (March 15, 1996)
IL960038 (March 15, 1996)
IL960040 (March 15, 1996)
IL960041 (March 15, 1996)
IL960043 (March 15, 1996)
IL960044 (March 15, 1996)
IL960045 (March 15, 1996)
IL960046 (March 15, 1996)
IL960049 (March 15, 1996)
IL960050 (March 15, 1996)
IL960051 (March 15, 1996)
IL960056 (March 15, 1996)
IL960058 (March 15, 1996)
IL960060 (March 15, 1996)
IL960062 (March 15, 1996)
IL960063 (March 15, 1996)
IL960064 (March 15, 1996)
IL960066 (March 15, 1996)
IL960067 (March 15, 1996)
IL960068 (March 15, 1996)
IL960069 (March 15, 1996)

Indiana:
IN960001 (March 15, 1996)
IN960002 (March 15, 1996)
IN960003 (March 15, 1996)
IN960004 (March 15, 1996)
IN960005 (March 15, 1996)
IN960006 (March 15, 1996)
IN960017 (March 15, 1996)
IN960018 (March 15, 1996)
IN960020 (March 15, 1996)

Michigan:
MI960001 (March 15, 1996)
MI960002 (March 15, 1996)
MI960003 (March 15, 1996)
MI960004 (March 15, 1996)
MI960005 (March 15, 1996)
MI960007 (March 15, 1996)
MI960012 (March 15, 1996)
MI960030 (March 15, 1996)
MI960031 (March 15, 1996)
MI960034 (March 15, 1996)
MI960039 (March 15, 1996)
MI960047 (March 15, 1996)
MI960062 (March 15, 1996)
MI960063 (March 15, 1996)
MI960064 (March 15, 1996)

Minnesota:
MN960003 (March 15, 1996)
MN960005 (March 15, 1996)
MN960007 (March 15, 1996)
MN960008 (March 15, 1996)
MN960012 (March 15, 1996)
MN960015 (March 15, 1996)
MN960017 (March 15, 1996)
MN960027 (March 15, 1996)
MN960031 (March 15, 1996)
MN960035 (March 15, 1996)
MN960039 (March 15, 1996)
MN960043 (March 15, 1996)
MN960044 (March 15, 1996)
MN960045 (March 15, 1996)
MN960046 (March 15, 1996)
MN960047 (March 15, 1996)
MN960048 (March 15, 1996)
MN960049 (March 15, 1996)
MN960058 (March 15, 1996)
MN960059 (March 15, 1996)
MN960060 (March 15, 1996)
MN960061 (March 15, 1996)

Ohio:
OH960001 (March 15, 1996)
OH960002 (March 15, 1996)
OH960003 (March 15, 1996)
OH960012 (March 15, 1996)
OH960014 (March 15, 1996)
OH960024 (March 15, 1996)
OH960026 (March 15, 1996)
OH960027 (March 15, 1996)
OH960028 (March 15, 1996)
OH960029 (March 15, 1996)
OH960032 (March 15, 1996)
OH960033 (March 15, 1996)
OH960034 (March 15, 1996)
OH960035 (March 15, 1996)
OH960036 (March 15, 1996)

Wisconsin:
WI960008 (March 15, 1996)
WI960010 (March 15, 1996)
WI960019 (March 15, 1996)

Volume V

Iowa:
IA960004 (March 15, 1996)
IA960005 (March 15, 1996)
IA960006 (March 15, 1996)
IA960009 (March 15, 1996)

Louisiana:
LA960001 (March 15, 1996)
LA960001 (March 15, 1996)
LA960005 (March 15, 1996)
LA960009 (March 15, 1996)
LA960014 (March 15, 1996)
LA960015 (March 15, 1996)
LA960018 (March 15, 1996)

Missouri:
MO960001 (March 15, 1996)
MO960003 (March 15, 1996)
MO960010 (March 15, 1996)
MO960020 (March 15, 1996)
MO960051 (March 15, 1996)
MO960064 (March 15, 1996)
MO960066 (March 15, 1996)

Nebraska:
NE960001 (March 15, 1996)
NE960007 (March 15, 1996)
NE960009 (March 15, 1996)
NE960058 (March 15, 1996)
NE960059 (March 15, 1996)

Oklahoma:
OK960013 (March 15, 1996)
OK960014 (March 15, 1996)
OK960016 (March 15, 1996)
OK960017 (March 15, 1996)
OK960018 (March 15, 1996)
OK960034 (April 12, 1996)
OK960036 (April 12, 1996)
OK960037 (April 12, 1996)

Texas:
TX960003 (March 15, 1996)

Volume VI

Alaska: AK960001 (March 15, 1996)

California:
CA960001 (March 15, 1996)
CA960002 (March 15, 1996)
CA960004 (March 15, 1996)
CA960028 (March 15, 1996)
CA960029 (March 15, 1996)
CA960030 (March 15, 1996)
CA960031 (March 15, 1996)
CA960032 (March 15, 1996)
CA960033 (March 15, 1996)
CA960034 (March 15, 1996)
CA960035 (March 15, 1996)
CA960036 (March 15, 1996)
CA960037 (March 15, 1996)
CA960038 (March 15, 1996)
CA960039 (March 15, 1996)
CA960040 (March 15, 1996)
CA960041 (March 15, 1996)
CA960042 (March 15, 1996)
CA960043 (March 15, 1996)
CA960044 (March 15, 1996)
CA960045 (March 15, 1996)
CA960046 (March 15, 1996)
CA960047 (March 15, 1996)
CA960048 (March 15, 1996)
CA960049 (April 12, 1996)
CA960050 (April 12, 1996)
CA960051 (April 12, 1996)
CA960052 (April 12, 1996)
CA960053 (April 12, 1996)
CA960054 (April 12, 1996)
CA960055 (April 12, 1996)
CA960056 (April 12, 1996)
CA960057 (April 12, 1996)

CA960058 (April 12, 1996)
CA960059 (April 12, 1996)
CA960060 (April 12, 1996)
CA960061 (April 12, 1996)
CA960062 (April 12, 1996)
CA960063 (April 12, 1996)
CA960064 (April 12, 1996)
CA960065 (April 12, 1996)
CA960066 (April 12, 1996)
CA960067 (April 12, 1996)
CA960068 (April 12, 1996)
CA960069 (April 12, 1996)
CA960070 (April 12, 1996)
CA960071 (April 12, 1996)
CA960072 (April 12, 1996)
CA960073 (April 12, 1996)
CA960074 (April 12, 1996)
CA960075 (April 12, 1996)
CA960076 (April 12, 1996)
CA960077 (April 12, 1996)
CA960078 (April 12, 1996)
CA960079 (April 12, 1996)
CA960080 (April 12, 1996)
CA960081 (April 12, 1996)
CA960082 (April 12, 1996)
CA960083 (April 12, 1996)
CA960084 (April 12, 1996)
CA960085 (April 12, 1996)
CA960086 (April 12, 1996)
CA960087 (April 12, 1996)
CA960089 (April 12, 1996)
CA960090 (April 12, 1996)
CA960091 (April 12, 1996)
CA960092 (April 12, 1996)
CA960093 (April 12, 1996)

Colorado:
CO960008 (March 15, 1996)
CO960012 (March 15, 1996)
CO960014 (March 15, 1996)
CO960018 (March 15, 1996)
CO960021 (March 15, 1996)
CO960022 (March 15, 1996)
CO960034 (March 15, 1996)
CO960035 (March 15, 1996)

Idaho:
ID960001 (March 15, 1996)
ID960003 (March 15, 1996)

North Dakota: ND960001 (March 15, 1996)

Oregon:
OR960001 (March 15, 1996)
OR960004 (March 15, 1996)
OR960017 (March 15, 1996)

South Dakota:
SD960002 (March 15, 1996)
SD960024 (March 15, 1996)
SD960041 (March 15, 1996)

Washington:
WA960001 (March 15, 1996)
WA960002 (March 15, 1996)
WA960003 (March 15, 1996)
WA960004 (March 15, 1996)
WA960005 (March 15, 1996)
WA960006 (March 15, 1996)
WA960007 (March 15, 1996)
WA960008 (March 15, 1996)
WA960010 (March 15, 1996)
WA960023 (March 15, 1996)

Wyoming:
WY960004 (March 15, 1996)
WY960009 (March 15, 1996)
WY960021 (March 15, 1996)

General Wage Determination Publication

General wage determinations issued under the Davis-Bacon and related Acts, including those noted above, may be found in the Government Printing Office (GPO) document entitled ''General Wage Determinations Issued Under the Davis-Bacon and Related Acts''. This publication is available at each of the 50 Regional Government Depository Libraries and many of the 1,400 Government Depository Libraries across the county.

The general wage determinations issued under the Davis-Bacon and related Acts are available electronically by subscription to the FedWorld Bulletin Board System of the National Technical Information Service (NTIS) of the U.S. Department of Commerce at (703) 487–4630.

Hard-copy subscriptions may be purchased from:

Superintendent of Documents, U.S. Government Printing Office, Washington, D.C 20402, (202) 512–1800

When ordering hard-copy subscription(s), be sure to specify the State(s) of interest, since subscriptions may be ordered for any or all of the six separate volumes, arranged by State. Subscriptions include an annual edition (issued in January or February) which includes all current general wage determinations for the States covered by each volume. Throughout the remainder of the year, regular weekly updates are distributed to subscribers.

Signed at Washington, D.C. This 31st day of May 1996.

Philip J. Gloss,

Chief, Branch of Construction Wage Determinations.

[FR Doc. 96–14056 Filed 6–6–96; 8:45 am]

BILLING CODE 4510–27–M

NATIONAL AERONAUTICS AND SPACE ADMINISTRATION

[Notice 96–057]

Notice of Prospective Patent License

AGENCY: National Aeronautics and Space Administration.

ACTION: Notice of Prospective Patent License.

SUMMARY: NASA hereby gives notice that Marotta Scientific Controls, Inc., of Montville, New Jersey, has applied for a partially exclusive license to practice the inventions described and claimed in U.S. Patent Nos. 5,166,679; 5,214,388; 5,363,051; 5,373,245; 5,515,001; and 5,521,515 entitled respectively, ''Driven Shield Capacitive Proximity Sensor,'' ''Phase Discrimination Capacitive Array Sensor System,'' ''Steering Capaciflector Sensor,'' ''Capaciflector Camera,'' ''Double-Driven Shield Capacitive Type Proximity Sensor,'' ''Current Measuring OP–AMP Devices,'' and ''Frequency Scanning Capaciflector,'' and for the following NASA inventions disclosed in NASA Case Nos. GSC–13, 614–1 and GSC–13, 710–1, entitled respectively, ''Capaciflector-Guided Mechanisms'' and ''3–D Capaciflector.'' All of the aforementioned inventions are assigned to the United States of America as represented by the National Aeronautics and Space Administration. Written objections to the prospective grant of a license should be sent to Mr. R. Dennis Marchant, Patent Counsel, NASA Goddard Space Flight Center.

DATE: Responses to this notice must be received by August 6, 1996.

FOR FURTHER INFORMATION CONTACT: Mr. R. Dennis Marchant, Patent Counsel, NASA Goddard Space Flight Center, Mail Code 204, Greenbelt, Maryland 20771; telephone (301) 286–7351.

Dated: May 31, 1996.

Edward A. Frankle,

General Counsel.

[FR Doc. 96–14412 Filed 6–6–96; 8:45 am]

BILLING CODE 7510–01–M

NATIONAL FOUNDATION ON THE ARTS AND HUMANITIES

Commission of Fine Arts; Notice of Meeting

The Commission of Fine Arts' next meeting is scheduled for 25 July 1996 at 10:00 a.m. in the Commission's offices in the Pension Building, Suite 312, Judiciary Square, 441 F Street, N.W., Washington, D.C. 20001 to discuss various projects affecting the appearance of Washington, D.C., including building, memorials, parks, etc.; also matters of design referred by other agencies of the government.

Inquiries regarding the agenda and requests to submit written or oral statements should be addressed to Charles H. Atherton, Secretary, Commission of Fine Arts, at the above address or call the above number.

Dated in Washington, D.C. 29 May 1996.

Charles H. Atherton,

Secretary.

[FR Doc. 96–14334 Filed 6–6–96; 8:45 am]

BILLING CODE 6330–01–M

NATIONAL SCIENCE FOUNDATION

Antarctic Tour Operators Meeting

The National Science Foundation announces the following meeting:

NAME: Antarctic Tour Operators Meeting.

DATE AND TIME: July 11, 1996, 9:00 a.m.–4:30 p.m.

PLACE: National Science Foundation, Room 375, 4201 Wilson Boulevard, Arlington, Virginia 22230.

TYPE OF MEETING: Open.

CONTACT PERSON: Nadene G. Kennedy, Polar Coordination Specialist, Office of Polar Programs, National Science Foundation, Arlington, VA 22230, Telephone: 703/306–1033; Fax: 703/306–0139.

PURPOSE OF MEETING: Pursuant to the National Science Foundation's responsibilities under the Antarctic Conservation Act (P.L. 95–541) and the Antarctic Treaty, the U.S. Antarctic Program Managers plan to meet with Antarctic Tour Operators to exchange information concerning dates and procedures for visiting U.S. antarctic stations, review the latest Antarctic Treaty Recommendations concerning the environment and protected sites, and other items designed to protect the Antarctic environment.

Agenda

- Introduction and Overview.
- Review of 1995–96 Visits to McMurdo, Palmer and South Pole Stations.
- Tour Operator's Comments on 1995–96 Season Visits.
- 1996–97 Visits to McMurdo, Palmer and South Pole Stations.
- Report from the International Association of Antarctic Tour Operators (IAATO).
- Information Dissemination.
- Oil Spill Contingency Plans.
- Environmental Impact Assessments.
- Report from the 20th Antarctic Treaty Consultative Meeting in Utrecht, Netherlands.
- Other Items.

Nadene G. Kennedy,

Polar Coordination Specialist, Office of Polar Programs.

[FR Doc. 96–14438 Filed 6–6–96; 8:45 am]

BILLING CODE 7555–01–M

Special Emphasis Panel in Bioengineering and Environmental Systems; Notice of Meeting

In accordance with the Federal Advisory Committee Act (Pub. L. 92–463, as amended), the National Science Foundation announces the following meeting.

Name: Special Emphasis Panel in Bioengineering and Environmental Systems (No. 1189).

Date and Time: June 25–26, 1996; 8:30 a.m.–5:00 p.m.

Place: National Science Foundation, 4201 Wilson Boulevard, Room 530, Arlington, VA 22230.

Type of Meeting: Closed.

Contact Person: H. Frederick Bowman, program Director, Biomedical Engineering and Research to Aid Persons with Disabilities, Division of Bioengineering and Environmental Systems, National Science Foundation, 4201 Wilson Boulevard, Arlington, VA 22230, Telephone: (703) 306–1318.

Purpose of Meeting: To provide advice and recommendations concerning proposals submitted to NSF for financial support.

Agenda: To review and evaluate proposals as part of the selection process for awards.

Reason for Closing: The proposals being reviewed include information of a proprietary or confidential nature, including technical information; financial data, such as salaries; and personal information concerning individuals associated with the proposals. These matters are exempt under 5 U.S.C. 552b(c), (4) and (6) of the Government in the Sunshine Act.

Dated: June 3, 1996.

M. Rebecca Winkler,

Committee Management Officer.

[FR Doc. 96–14325 Filed 6–6–96; 8:45 am]

BILLING CODE 7555–01–M

Special Emphasis Panel in Civil and Mechanical Systems; Notice of Meeting

In accordance with the Federal Advisory Committee Act (Pub. L. 92–463, as amended), the National Science Foundation announces the following meeting.

Name and Committee Code: Special Emphasis Panel in Civil and Mechanical Systems #1205).

Date and Time: June 28, 1996, 8:30 a.m. to 5:00 p.m.

Place: Room 530, 4201 Wilson Boulevard, Arlington, VA 22230.

Type of Meeting: Closed.

Contact Person: Priscilla P. Nelson, Program Director Geomechnical, Geotechnical and Geo-environmental, National Science Foundation, 4201 Wilson Boulevard, Arlington, VA 22230. Telephone (703) 306–1361.

Purpose of Meeting: To provide advice and recommendations concerning proposals submitted to NSF for financial support.

Agenda: To review and evaluate Unsolicited as part of the selection process for awards.

Reason for Closing: The proposals being reviewed include information of a proprietary or confidential nature, including technical information; financial data, such as salaries and personal information concerning individuals associated with the proposals. These matters are exempt under 5 U.S.C. 552b(c) (4) and (6) of the Government in the Sunshine Act.

Dated: June 3, 1996.

M. Rebecca Winkler,

Committee Management Officer.

[FR Doc. 96–14321 Filed 6–6–96; 8:45 am]

BILLING CODE 7555–01–M

Special Emphasis Panel in Civil and Mechanical Systems; Notice of Meeting

In accordance with the Federal Advisory Committee Act (Pub. L. 92–463, as amended), the National Science Foundation announced the following meeting;

Name: Special Emphasis Panel in Civil and Mechanical Systems (#1205).

Date and Time: June 24, 1996, 8:30 a.m. 4:00 p.m.

Place: National Science Foundation, Room 330, Arlington, VA 22230.

Notice of Meeting: Closed.

Contact Person: Dr. Jorn Larsen-Basse, Program Director, 4201 Wilson Blvd., Arlington, VA 22230, Telephone: (703) 306–1360.

Purpose of Meeting: To provide advice and recommendations concerning proposals submitted to NSF for financial support.

Agenda: Review and evaluate Civil and Mechanical Systems NSF IIA proposals.

Reason for Closing: The proposals being reviewed include information of a proprietary or confidential nature, including technical information, financial data, such as salaries, and personal information concerning individuals associated with the proposals. These matters are exempt under 5 552b(c) (4) and (6) of the Government in the Sunshine Act.

Dated: June 3, 1996.

M. Rebecca Winkler,

Committee Management Officer.

[FR Doc. 96–14326 Filed 6–6–96; 8:45 am]

BILLING CODE 7555–01–M

Special Emphasis Panel in Design, Manufacture, and Industrial Innovation: Notice of Meeting

In accordance with the Federal Advisory Committee Act (Pub. L. 92–463, as amended), the National Science Foundation announces the following meeting:

Name: Special Emphasis Panel, Design, Manufacture, and Industrial Innovation—(#1194).

Date and Time: June 24, 1996, 8:30 a.m.–5:00 p.m.

Place: Room 370, National Science Foundation, 4201 Wilson Boulevard, Arlington, VA 22230.

Type of Meeting: Closed.

Contact Person: Yousef Hashimi, SBIR Program Manager, (703) 306–1391, and Roger Arndt, Program Manager, CTS, (703) 306–1856, National Science Foundation, 4201 Wilson Boulevard, Arlington, VA 22230.

Purpose of Meeting: To provide advice and recommendations concerning Phase II Chemistry and Fluid Applicants (Topic #22) proposals submitted to the NSF for financial support.

Reason for Closing: The proposals being reviewed include information of a proprietary or confidential nature, including technical information, financial data such as

salaries, and personal information concerning individuals associated with the proposals. These matters are exempt under 5 U.S.C. 552b(c) (4) and (6) of the Government in the Sunshine Act.

Dated: June 3, 1996.

M. Rebecca Winkler,

Committee Management Officer.

[FR Doc. 96–14322 Filed 6–6–96; 8:45 am]

BILLING CODE 7555–01–M

Advisory Committee for Education and Human Resources, Committee of Visitors for Networking Infrastructure for Education and Applications of Advanced Technologies; Notice of Meeting

In accordance with the Federal Advisory Committee Act (Pub. L. 92–463, as amended), the National Science Foundation announces the following meeting:

Name: Advisory Committee for Education and Human Resources (#1119).

Date and Time:

June 24, 1996; 8:30 a.m. to 5:00 p.m.

June 25, 1996; 8:30 a.m. to 5:00 p.m.

Place: Room 855, National Science Foundation, 4201 Wilson Boulevard, Arlington, VA 22230.

Type of Meeting: Closed.

Contact Person: Dr. Nora Sabelli, Senior Program Director, 4201 Wilson Boulevard, Room 855, Arlington, VA 22230. Telephone (703) 306–1651.

Purpose of Meeting: To provide oversight review of the Networking Infrastructure for Education and Applications of Advanced Technologies Programs, REC.

Agenda: To carry out Committee of Visitors review, including examination of decisions on proposals, reviewer comments, and other privileged materials.

Reason for Closing: The meeting is closed to the public because the Committee is reviewing proposal actions that will include privileged intellectual property and personal information that could harm individuals if they were disclosed. If discussions were open to the public, these matters that are exempt under 5 U.S.C. 552b(c) (4) and (6) of the Government in the Sunshine Act would be improperly disclosed.

Dated: June 3, 1996.

M. Rebecca Winkler,

Committee Management Officer.

[FR Doc. 96–14323 Filed 6–6–96; 8:45 am]

BILLING CODE 7555–01–M

Advisory Committee for Education and Human Resources; Committee of Visitors; Notice of Meeting

In accordance with the Federal Advisory Committee Act (Pub. L. 92–463, as amended), the National Science Foundation announces the following meeting.

Name: Advisory Committee for Education and Human Resources; Committee of Visitors (#1119)

Date and Time: June 25 (8:30 a.m.–5:00 p.m.); June 26 (8:30 a.m. to adjourn at 12:00 noon).

Place: National Science Foundation, 4201 Wilson Blvd., Suite 880, Arlington, VA.

Type of Meeting: Closed.

Contact Person: Dr. Richard Anderson, National Science Foundation 4201 Wilson Blvd., Arlington, VA 22230 (703) 306–1683.

Purpose of Meeting: To carry out Committee of Visitors (COV) review, including examination of decisions on proposals, reviewer comments, and other privileged materials.

Agenda: To review and evaluate the Experimental Program to Stimulate Competitive Research (EPSCoR) Program and provide assessment of program level technical and managerial matters pertaining to proposal decisions and program operations.

Reason for Closing: The meeting is closed to the public because the Committee is reviewing proposal actions that will include privileged intellectual property and personal information that could harm individuals if they were disclosed. If discussions were open to the public, these matters that are exempt under 5 U.S.C. 552b(c) (4) and (6) of the Government in the Sunshine Act would be improperly disclosed.

Dated: June 3, 1996.

M. Rebecca Winkler,

Committee Management Officer.

[FR Doc. 96–14327 Filed 6–6–96; 8:45 am]

BILLING CODE 7555–01–M

Committee on Equal Opportunity in Science and Engineering; Notice of Meeting

In accordance with the Federal Advisory Committee Act Pub. L. 92–463, as amended, the National Science Foundation announces the following meeting:

Name: Committee on Equal Opportunities in Science and Engineering (CEOSE) (1173).

Date & Time: June 19, 20, and possibly a half-day session on June 21, 1996; 8:30 to 5:00 each day.

Place: Room 375, National Science Foundation, 4201 Wilson Blvd., Arlington, VA.

Type of Meeting: Open.

Contact Person: Susan Kemnitzer, Executive Secretary, CEOSE, National Science Foundation, 4201 Wilson Blvd., Arlington, VA 22210. Phone (703) 306–1382.

Minutes: May be obtained from the Executive Secretary at the above address.

Purpose of Meeting: To plan broader CEOSE participation in the federal sector and to review issues about and assessments of participation rates of all segments of society in science and engineering.

Agenda: To discuss national policy issues, including the importance of science and engineering to the national interest; update on the Affirmative Action Task Force; Report on Tribally-Controlled College Initiative; Drafting and finalizing Report on Directorate Reviews.

Dated: June 3, 1996.

M. Rebecca Winkler,

Committee Management Officer.

[FR Doc. 96–14328 Filed 6–6–96; 8:45 am]

BILLING CODE 7555–01–M

Special Emphasis Panel in Physics; Notice of Meeting

In accordance with the Federal Advisory Committee Act (Pub. L. 92–463, as amended), the National Science Foundation announces the following meeting.

Name: Special Emphasis Panel in Physics (#1208).

Date: June 24–25, 1996.

Place: Room 310, National Science Foundation, 4201 Wilson Boulevard, Arlington, VA 22230.

Type of Meeting: Part open, part closed.

Contact Person: Dr. David Berley, Program Manager, Laser Interferometer Gravitational Observatory, Physics Division, Room 1015, National Science Foundation, 4201 Arlington Blvd., Arlington, VA 22230. Telephone: (703) 306–1892.

Purpose of Meeting: To advise NSF on the development of a users program for the Laser Interferometer Gravitational (LIGO), to address the resources, procedures and policies required to select and support the most worthy investigations at LIGO.

Agenda: Open session: 9:00 a.m. to 4:00 p.m. June 24, 1996. Review of the status of the LIGO, report from the LIGO Research Community, statements of intent from prospective LIGO collaborators and users.

Closed Session: 8:30 a.m.–9:00 a.m. June 24, 1996, Committee organization; 4:00 p.m.–6:00 p.m. June 24, 1996 and 9:00 a.m.–4:00 p.m. June 25, 1996, discussion of individual research plans and formulation of recommendations.

Reason for Closing: The plans being reviewed include information of a proprietary or confidential nature, including technical information prior to the award of grants. These matters are exempt under 5 U.S.C. 552b(c), (4) and (6) of the Government in the Sunshine Act.

Dated: June 3, 1996.

M. Rebecca Winkler,

Committee Management Officer.

[FR Doc. 96–14324 Filed 6–6–96; 8:45 am]

BILLING CODE 7555–01–M

NUCLEAR REGULATORY COMMISSION

[Docket No. 50–335]

Florida Power and Light company; Notice of Consideration of Issuance of Amendment to Facility Operating License, Proposed No Significant Hazards Consideration Determination, and Opportunity for a Hearing

The U.S. Nuclear Regulatory Commission (the Commission) is considering issuance of an amendment to Facility Operating License No. DPR–67, issued to Florida Power and Light Company, (the licensee), for operation of the St. Lucie Plant Unit No. 1 located in St. Lucie County, Florida.

The proposed amendment would reduce the stated value of design reactor coolant flow from 355,000 gpm to 345,000 gpm, revise the reactor core thermal margin safety limits shown in FIGURE 2.1–1, and modify the reactor coolant system total water and steam volume described in the design features. The amendment also reduces the Limiting Safety System Setting for the reactor coolant low flow trip function from greater than or equal to 95% to greater than or equal to 93% of design reactor coolant flow. Finally, TS 2.1.1 is modified to limit reactor power to less than or equal to 90% rated thermal power for Cycle 14 operation exceeding mid-cycle fuel burn up conditions. The revisions are being made to support changes in the safety analyses which accommodate a larger number of plugged steam generator tubes.

On April 29, 1996, St. Lucie Unit 1 entered a scheduled refueling outage. A margin of approximately 14% existed between the average number of steam generator (SG) tubes that had been previously removed from service and the number of plugged tubes assumed in the safety analyses. Based on a 10-year history of 100% Eddy Current Testing (ECT), and including additional inspection commitments pursuant to generic letter (GL) 95–03, ''Circumferential Cracking of Steam Generator Tubes,'' the number of tubes conservatively estimated to be removed from service during this outage was far less than the remaining analytical margin.

Based on meetings and conversations with NRC staff subsequent to entry into the outage, concerns involving the qualification of techniques for sizing SG tube crack-like indications were identified, resulting in the staff questioning the SG tube repair criteria which have been in place at Florida Power and Light Company (FPL) since 1985. On May 14, 1996, FPL agreed to implement a more conservative criteria for the Cycle 14 inspection. The licensee's assessment of the impact of implementing this criteria indicates that the number of SG tubes to be plugged may exceed the existing 25% (average) analyses limit.

The change in repair criteria and the magnitude of resultant SG tube plugging could not have been reasonably anticipated prior to NRC staff concerns having been communicated to FPL during the recent meeting and discussions. The need for an amendment to implement revised St. Lucie Unit 1 power and RCS flow limits could not have been anticipated prior to assessing the impact of the change in repair criteria following FPL's meeting and discussions with the NRC staff. The necessary evaluations and preparation of the proposed license amendment were initiated without delay and at the earliest practical time. Analyses and quality assurance verifications to support the proposed license amendment were completed in an expeditious manner, and were performed in parallel with the ongoing tube examinations.

FPL expects to complete the refueling overhaul and the required startup preparations by June 20, 1996. Until a license amendment is issued to authorize operation with the proposed changes, resumption of St. Lucie Unit 1 power operations will be prevented by the current Technical Specifications.

Before issuance of the proposed license amendment, the Commission will have made findings required by the Atomic Energy Act of 1954, as amended (the Act) and the Commission's regulations.

Pursuant to 10 CFR 50.91(a)(6) for amendments to be granted under exigent circumstances, the NRC staff must determine that the amendment request involves no significant hazards consideration. Under the Commission's regulations in 10 CFR 50.92, this means that operation of the facility in accordance with the proposed amendment would not: (1) Involve a significant increase in the probability or consequences of an accident previously evaluated; or (2) create the possibility of a new or different kind of accident from any accident previously evaluated; or (3) involve a significant reduction in a margin of safety. As required by 10 CFR 50.91(a), the licensee has provided its analysis of the issue of no significant hazards consideration, which is presented below:

(1) Operation of the facility in accordance with the proposed amendment would not involve a significant increase in the probability or consequences of an accident previously evaluated.

The proposed amendment defines reactor core thermal margin safety limits for a reduced value of design reactor coolant flow, and establishes a revised Limiting Safety System Setting (LSSS) for the protective system low flow trip. As core protection variables, these limiting parameters are not accident initiators and do not affect the frequency of occurrence of previously analyzed transients. The design features' total water and steam volume revision accounts for steam generator tube plugging and is simply administrative in nature. Evaluations performed to assess the impact of the proposed amendment conclude that, when considering a unit derate to 90% rated thermal power for operation beyond 7000 EFPH in Cycle 14 as required by the proposed change to TS 2.1.1, the potential radiological consequences of previously analyzed transients will conservatively remain within established acceptance criteria. Therefore, operation of the facility in accordance with this amendment would not involve a significant increase in the probability or the consequences of any accident previously evaluated.

(2) Operation of the facility in accordance with the proposed amendment would not create the possibility of a new or different kind of accident from any accident previously evaluated.

The proposed amendment revises limiting parameters to assure safe operation commensurate with the impact of steam generator tube plugging, and will not change the modes of operation defined in the facility license. The analysis of transients associated with steam generator failures are part of the design and licensing bases. Therefore, operation of the facility in accordance with the proposed amendment would not create the possibility of a new or different kind of accident from any accident previously evaluated.

(3) Operation of the facility in accordance with the proposed amendment would not involve a significant reduction in a margin of safety.

The proposed amendment allows full power operation at an RCS flow commensurate with 30% (average) steam generator tube plugging for Cycle 14 fuel batch average burn up conditions corresponding to mid-cycle. For operation beyond mid-cycle, reactor power will be restricted to less than or equal to 90% rated thermal power. An evaluation of limiting events to established acceptance criteria for Specified Acceptable Fuel Design Limits (SAFDL), primary and secondary over pressurization transients, 10 CFR 50.46(b) emergency core cooling systems acceptance criteria, peak containment pressure, potential radiation dose during accidents, and to TS Limiting Conditions for Operation has been completed in support of this amendment request. The evaluation concludes, when considering the proposed LSSS for the Low Flow trip, that a conservative margin to acceptable limits remains available. Therefore, operation of the facility in accordance with this proposed amendment would not involve a significant reduction in a margin of safety.

The NRC staff has reviewed the licensee's analysis and, based on this review, it appears that the three standards of 10 CFR 50.92(c) are satisfied. Therefore, the NRC staff proposes to determine that the amendment request involves no significant hazards consideration.

The Commission is seeking public comments on this proposed determination. Any comments received within 15 days after the date of publication of this notice will be considered in making any final determination.

Normally, the Commission will not issue the amendment until the expiration of the 15-day notice period. However, should circumstances change during the notice period, such that failure to act in a timely way would result, for example, in derating or shutdown of the facility, the Commission may issue the license amendment before the expiration of the 15-day notice period, provided that its final determination is that the amendment involves no significant hazards consideration. The final determination will consider all public and State comments received. Should the Commission take this action, it will publish in the Federal Register a notice of issuance. The Commission expects that the need to take this action will occur very infrequently.

Written comments may be submitted by mail to the Chief, Rules Review and Directives Branch, Division of Freedom of Information and Publications Services, Office of Administration, U.S. Nuclear Regulatory Commission, Washington, DC 20555–0001, and should cite the publication date and page number of this Federal Register notice. Written comments may also be delivered to Room 6D22, Two White Flint North, 11545 Rockville Pike, Rockville, Maryland, from 7:30 a.m. to 4:15 p.m. Federal workdays. Copies of written comments received may be examined at the NRC Public Document Room, the Gelman Building, 2120 L Street, NW., Washington, DC.

The filing of requests for hearing and petitions for leave to intervene is discussed below.

By June 24, 1996, the licensee may file a request for a hearing with respect to issuance of the amendment to the subject facility operating license and any person whose interest may be affected by this proceeding and who wishes to participate as a party in the proceeding must file a written request for a hearing and a petition for leave to intervene. Requests for a hearing and a petition for leave to intervene shall be filed in accordance with the Commission's ''Rules of Practice for Domestic Licensing Proceedings'' in 10 CFR Part 2. Interested persons should consult a current copy of 10 CFR 2.714 which is available at the Commission's Public Document Room, the Gelman Building, 2120 L Street, NW., Washington, DC, and at the local public document room located at the Indian River Junior College Library, 3209 Virginia Avenue, Fort Pierce, Florida, 34954–9003. If a request for a hearing or petition for leave to intervene is filed by the above date, the Commission or an Atomic Safety and Licensing Board, designated by the Commission or by the Chairman of the Atomic Safety and Licensing Board Panel, will rule on the request and/or petition; and the Secretary or the designated Atomic Safety and Licensing Board will issue a notice of hearing or an appropriate order.

As required by 10 CFR 2.714, a petition for leave to intervene shall set forth with particularity the interest of the petitioner in the proceeding, and how that interest may be affected by the results of the proceeding. The petition should specifically explain the reasons why intervention should be permitted with particular reference to the following factors: (1) The nature of the petitioner's right under the Act to be made a party to the proceeding; (2) the nature and extent of the petitioner's property, financial, or other interest in the proceeding; and (3) the possible effect of any order which may be entered in the proceeding on the petitioner's interest. The petition should also identify the specific aspect(s) of the subject matter of the proceeding as to which petitioner wishes to intervene. Any person who has filed a petition for leave to intervene or who has been admitted as a party may amend the petition without requesting leave of the Board up to 15 days prior to the first prehearing conference scheduled in the proceeding, but such an amended petition must satisfy the specificity requirements described above. Not later than 15 days prior to the first prehearing conference scheduled in the proceeding, a petitioner shall file a supplement to the petition to intervene which must include a list of the contentions which are sought to be litigated in the matter. Each contention must consist of a specific statement of the issue of law or fact to be raised or controverted. In addition, the petitioner shall provide a brief explanation of the bases of the contention and a concise statement of the alleged facts or expert opinion which support the contention and on which the petitioner intends to rely in proving the contention at the hearing. The petitioner must also provide references to those specific sources and documents of which the petitioner is aware and on which the petitioner intends to rely to establish those facts or expert opinion. Petitioner must provide sufficient information to show that a genuine dispute exists with the applicant on a material issue of law or fact. Contentions shall be limited to matters within the scope of the amendment under consideration. The contention must be one which, if proven, would entitle the petitioner to relief. A petitioner who fails to file such a supplement which satisfies these requirements with respect to at least one contention will not be permitted to participate as a party.

Those permitted to intervene become parties to the proceeding, subject to any limitations in the order granting leave to intervene, and have the opportunity to participate fully in the conduct of the hearing, including the opportunity to present evidence and cross-examine witnesses.

If the amendment is issued before the expiration of the 30-day hearing period, the Commission will make a final determination on the issue of no significant hazards consideration. If a hearing is requested, the final determination will serve to decide when the hearing is held.

If the final determination is that the amendment request involves no significant hazards consideration, the Commission may issue the amendment and make it immediately effective, notwithstanding the request for a hearing. Any hearing held would take place after issuance of the amendment.

If the final determination is that the amendment request involves a significant hazards consideration, any hearing held would take place before the issuance of any amendment.

A request for a hearing or a petition for leave to intervene must be filed with the Secretary of the Commission, U.S. Nuclear Regulatory Commission, Washington, DC 20555–0001, Attention: Docketing and Services Branch, or may be delivered to the Commission's Public Document Room, the Gelman Building, 2120 L Street, NW., Washington, DC, by the above date. Where petitions are filed during the last 10 days of the notice period, it is requested that the petitioner promptly so inform the Commission by a toll-free telephone call to Western Union at 1-(800) 248–5100 (in Missouri 1-(800) 342–6700). The Western Union operator should be given Datagram Identification Number N1023 and the following message addressed to Frederick J. Hebdon: petitioner's name

and telephone number, date petition was mailed, plant name, and publication date and page number of this Federal Register notice. A copy of the petition should also be sent to the Office of the General Counsel, U.S. Nuclear Regulatory Commission, Washington, DC 20555–0001, and to Harold F. Reis, Esquire, Newman; and Holtzinger, 1615 L Street, NW., Washington, DC 20036, attorney for the licensee.

Nontimely filings of petitions for leave to intervene, amended petitions, supplemental petitions and/or requests for hearing will not be entertained absent a determination by the Commission, the presiding officer or the presiding Atomic Safety and Licensing Board that the petition and/or request should be granted based upon a balancing of the factors specified in 10 CFR 2.714(a)(1)(i)–(v) and 2.714(d).

For further details with respect to this action, see the application for amendment dated June 1, 1996, which is available for public inspection at the Commission's Public Document Room, the Gelman Building, 2120 L Street, NW., Washington, DC, and at the local public document room, located at the Indian River Junior College Library, 3209 Virginia Avenue, Fort Pierce, Florida 34954–9003.

Dated at Rockville, Maryland, this 3rd day of June 1996.

For the Nuclear Regulatory Commission.

Leonard A. Wiens,

Senior Project Manager, Project Directorate II–3, Division of Reactor Projects—I/II, Office of Nuclear Reactor Regulation.

[FR Doc. 96–14391 Filed 6–6–96; 8:45 am]

BILLING CODE 7590–01–P

NUCLEAR REGULATORY COMMISSION

[Docket No. 50–244]

Exemption

In the Matter of Rochester Gas and Electric Corporation, R.E. Ginna Nuclear Power Plant)

I

On December 10, 1984, the Nuclear Regulatory Commission issued Facility Operating License No. DPR–18 to Rochester Gas and Electric Corporation (RG&E) for the R.E. Ginna Nuclear Power Plant (Ginna). The license stipulated, among other things, that the facility is subject to all rules, regulations, and orders of the Commission.

II

The *Code of Federal Regulations*, Paragraph I.D.3, ''Calculation of Reflood Rate for Pressurized Water Reactors [PWRs],'' of Appendix K to Part 50 of Title 10 of the *Code of Federal Regulations* (10 CFR) requires that the refilling of the reactor vessel and the time and rate of reflooding of the core be calculated by an acceptable model that considers the thermal and hydraulic characteristics of the core and of the reactor system. In particular, Paragraph I.D.3 requires, in part, that, ''The ratio of the total fluid flow at the core exit plane to the total flow at the core inlet plane (carryover fraction) shall be used to determine the core exit flow and shall be determined in accordance with applicable experimental data.'' The purpose of this requirement is to assure that the core exit flow during the post-loss-of-coolant accident (LOCA) refill/reflood phase is determined using a model that accounts for appropriate experimental data.

Paragraph I.D.5, ''Refill and Reflood Heat Transfer for Pressurized Reactors,'' of Appendix K to 10 CFR Part 50 requires that for (1) reflood rates of 1 inch per second or higher, the reflood heat transfer coefficients be based on applicable experimental data for unblocked cores, and (2) reflood rates less than 1 inch per second during refill and reflood, heat transfer calculations be based on the assumption that cooling is only by steam.

License Condition 2.D provided an exemption from 10 CFR 50.46(a)(1) that the emergency core cooling system (ECCS) performance be calculated in accordance with an acceptable calculational model which conforms to the provisions of Appendix K (SER dated April 18, 1978). The exemption will expire upon receipt and approval of revised ECCS calculations.

By letter dated November 5, 1992, as supplemented on June 19, 1995, RG&E (the licensee) requested an exemption from 10 CFR Part 50, Appendix K, Paragraphs I.D.3 and I.D.5 based on revised ECCS calculations.

The November 5, 1992, exemption request was supported first by a plant specific ECCS evaluation model (EM) using a methodology not yet approved by NRC (WCAP–10924–P, Volume 2, Revision 2, Addendum 3). The proposed EM would have supported the May 1993, 1994, and 1995 core reloads. However, the WCAP–10924–P, Revision 2, Volume 2, Addendum 3 methodology has not yet been approved by NRC. On June 19, 1995, the licensee supported the November 5, 1992, exemption request by an updated plant specific EM using a methodology approved by NRC (WCAP–10924–P, Volume 1, Revision 1, Addendum 4). The proposed June 19, 1995, EM includes larger peaking factors necessary to support conversion to an 18-month fuel-cycle reload to begin in May 1996.

The specific provision of Paragraph I.D.3 from which the licensee requested an exemption, is the calculation of core exit flow based on carryover fraction. The licensee stated that the prescriptions for this calculation given in Paragraph I.D.3 were based on data for a bottom-flooding configuration design. The Ginna design relies on upper plenum injection (UPI) for the ECCS injection during the reflood phase of a large-break LOCA. UPI is not a ''lower flooding design;'' its ECCS flow patterns, flow magnitudes, core cooling mechanisms, and, in fact, the meanings and impacts of the terms ''inlet'' and ''exit'' are different than those of bottom flooding plants. This EM described in WCAP 10924–P, Volume 1, Revision 2, Addendum 4, ''Westinghouse UPI Model Improvements,'' dated August 1990, which has been generically approved in a staff SER of February 8, 1991, determines core flow, including flow ''exiting'' the core, flow ''entering'' the core, and flow within the core and elsewhere within the reactor coolant system (RCS) in accordance with applicable experimental data. The data are different than that referenced in paragraph I.D.3, however, they were found acceptable because they are specifically applicable to UPI designs. Because of the differences between UPI design considerations and those for bottom flooding designs mentioned above, the ''carryover fraction'' as defined in paragraph I.D.3 is not calculated in the approved EM and would not have the same technical significance if it were. The licensee, therefore, concludes that, in using the approved UPI model with its technical improvements for Ginna, it will not comply with Paragraph I.D.3. The staff SER of February 8, 1991, finds WCAP–10924–P EM contains an empirically verified model more directly applicable to top flooding situations to calculate core exit flow, which satisfies the technical purpose of this Appendix K, paragraph I.D.3 requirement to determine the core exit flow, but does not comply with the letter of the requirement.

In more detail, the intent of the Appendix K, paragraph I.D.3, is to assure that the calculation of core exit flow is performed using an EM code model which has been verified against appropriate experimental data for LOCA accident analyses. The Westinghouse COBRA/TRAC code (*W*COBRA/TRAC) consists of (1) Westinghouse Large-Break LOCA Best Estimate Methodology, Volume 1: Model

Description and Validation, WCAP–10924–P, April 1986, and (2) a Westinghouse Large-Break LOCA Best Estimate Methodology, Volume 2: Application to Two-Loop PWRs Equipped with Upper Plenum Injection, WCAP–10924, Volume 2, Revision 1, April 1988.

To assess *W*COBRA/TRAC's capability for predicting the correct thermal-hydraulic behavior for upper plenum injection situations, *W*COBRA/TRAC has been compared to the Japanese Cylindrical Core Test Facility data which models the interaction effects of upper plenum injection in a large scale test facility. *W*COBRA/TRAC predicts the thermal-hydraulic effects of the upper plenum injection such that the carryover of steam and water into the hot legs is more realistically calculated.

The staff finds that the exemption from Paragraph I.D.3 requirement is acceptable because the licensee has provided an acceptable method to satisfy the underlying purpose of the requirement that appropriately models heat transfer mechanisms in UPI designs and application of the regulation is not necessary to achieve the underlying purpose of the rule.

Paragraph I.D.5, dealing with refill and reflood heat transfer for PWRs, provides heat transfer prescriptions for refill, reflood with a flooding rate of less than 1 inch per second, and reflood with a flooding rate of more than 1 inch per second for bottom-flooding PWRs. The purpose of the paragraph is to assure that heat transfer in the core is appropriately calculated in the refill and reflood phases of post-LOCA recovery.

Paragraph I.D.5.a requires that ''New correlations or modifications to the FLECHT heat transfer correlations are acceptable only after they are demonstrated to be conservative, by comparison with FLECHT data, for a range of parameters consistent with the transient to which they are applied.'' The licensee requested an exemption from the prescriptions of this paragraph because the FLECHT data do not portray UPI core heat transfer mechanisms as realistically as the more recent data upon which the models in WCAP–10924 were based. The licensee also indicates that the Ginna design is not lower flooding, and that technical considerations are different between bottom flooding designs and UPI design similar to those discussed above for paragraph I.D.3. The licensee identified that the WCAP–10924–P EM contains an empirically verified model which accounts for refill and reflood heat transfer, which satisfies the purpose of the paragraph I.D.5.a requirement. The heat transfer models in the approved UPI EM are based on comparisons to data other than the FLECHT data cited in Paragraph I.D.5.a, and comparisons to the applicable data demonstrate acceptable conservatism (as identified in the staff SER of February 8, 1991). Because of the differences in bases, it is not clear that the licensee can demonstrate monotonic conservatism with respect to FLECHT data.

Further, to meet the intent of Appendix K, paragraph I.D.5, which is to use the most applicable data for LOCA accident analyses to appropriately calculate heat transfer during the refill and reflood phases; the *W*COBRA/TRAC code has been verified against two independent sets of experimental data which model the upper plenum injection flow and heat transfer situation.

The first series of tests which have been modeled by *W*COBRA/TRAC are the Westinghouse G–2 refill downflow and counterflow rod bundle film boiling experiments (Westinghouse G–2, 17×17 Refill Heat Transfer Tests and Analysis, WCAP–8793, August 1976).

These experiments were performed as a full length 17×17 Westinghouse rod bundle array which had a total of 336 heated rods. The injection flow was from the top of the bundle and is scalable to the UPI injection flows. The pressures varied between 20–100 psia which is the typical range for UPI top flooding situations. Both concurrent downflow film boiling and countercurrent film boiling experiments were modeled using *W*COBRA/TRAC. Both these flow situations are found in the calculated core response for a PWR with UPI.

In addition to modeling these separate effects tests, *W*COBRA/TRAC has been used to model the Japanese Cylindrical Core Test Facility experiments with upper plenum injection. The tests which have been modeled included: (1) A symmetrical UPI injection with maximum injection flow, (2) minimum injection flows with a nearly symmetrical injection pattern, (3) a minimum UPI injection flow with a skewed UPI injection, and (4) a cold leg injection reference test for the UPI tests.

The results of these comparisons are documented and show that *W*COBRA/TRAC does predict heat transfer behavior for these complex film boiling situations as well as the system response for upper plenum injection situations.

The effect of flow blockage due to cladding burst is explicitly accounted for in *W*COBRA/TRAC with models which calculate cladding swelling, burst, and area reduction due to blockage. These models are based on previously approved models used in current evaluation models and on flow blockage models determined to be acceptable by the staff. The effect of flow blockage is accounted for from the time burst is calculated to occur. The fluid models in WCAP/TRAC calculate flow diversion as a result of the blockage and take into account of the blockage from the time the cladding burst is calculated to occur. Thus, the heat transfer behavior is predicted for these complex film boiling situations and, thus, the intent of Appendix K, paragraph I.D.5, which requires flow blockage effects be taken into account, is met.

The staff finds that the exemption from the paragraph I.D.5.a requirement is acceptable based on the provision of an acceptable method to satisfy the purpose of the paragraph and the application of the regulation to calculate core reflood rates and heat transfer during a LB LOCA.

Paragraph I.D.5.b requires that ''During refill and during reflood when reflood rates are less than one inch per second, heat transfer calculations shall be based on the assumption that cooling is only by steam, and shall take into account any flow blockage calculated to occur as a result of cladding swelling or rupture as such blockage might affect both local steam flow and heat transfer.'' The EM approved for UPI plants which the licensee proposes to reference does base heat transfer on cooling other than steam if other regimes are calculated to occur. The bases of acceptability, including data comparisons, for this are discussed in the generic SER for the EM. By using this methodology, the licensee does not comply with this requirement, since the methodology recognizes that for a top flooding design, the preponderance of cooling water falls down into the core from above and may or may not be vaporized. Because the licensee's model does not meet the ''steam cooling only'' requirement of I.D.5.b, but provides an approved alternate methodology (which does consider the thermal and hydraulic effects of cladding swelling and rupture, as also required in paragraph I.D.5.b) for calculating heat transfer, the staff finds the exemption from the requirement of I.D.5.b acceptable, as compliance is demonstrated not to be necessary to achieve the underlying purpose of the rule.

III

Section 50.12 of 10 CFR permits the granting of an exemption from the regulations under special circumstances. According to 10 CFR

50.12(a)(2)(ii), special circumstances are present whenever application of the regulation in question is not necessary to achieve the underlying purpose of the rule.

The staff finds that the requested exemptions for Ginna are acceptable, since compliance with the literal requirements of the paragraphs cited is not necessary given that the approved EM is based upon appropriate experimental data, the approved EM satisfactorily accounts for the cooling mechanisms in the Ginna UPI design for calculations of core reflood rates and heat transfer during a LB LOCA, and that the approved EM satisfies the purpose of the exempted requirements.

Thus, using the best-estimate thermal-hydraulic approved LBLOCA EM, the underlying purpose of the Appendix K, paragraphs I.D.3 and I.D.5 requirements can be achieved.

IV

Accordingly, the Commission has determined that, pursuant to 10 CFR 50.12, this exemption is authorized by law, will not present an undue risk to the public health and safety, and is consistent with the common defense and security.

Accordingly, the Commission hereby grants an exemption from 10 CFR Part 50, Appendix K, paragraphs I.D.3 and I.D.5. The staff also finds that the LB LOCA EM described in any approved version of WCAP–10924–P incorporated in the Ginna Technical Specifications may be used in core operating report, and licensing analyses, and that further exemptions will not be necessary unless the updated approved versions of the EM do not meet other requirements of 10 CFR 50.46 and/or Appendix K.

Pursuant to 10 CFR 51.32, the Commission has determined that the granting of the exemption will have no significant impact on the quality of the human environment (61 FR 13891).

This exemption is effective upon issuance.

For the Nuclear Regulatory Commission.

Dated at Rockville, Maryland, this 31st day of May 1996.

Steven A. Varga,

Director, Division of Reactor Projects—I/II 1Office of Nuclear Reactor Regulation.

[FR Doc. 96–14395 Filed 6–6–96; 8:45 am]

BILLING CODE 7590–01–P

NUCLEAR WASTE TECHNICAL REVIEW BOARD

Board Meeting: Exploration and Testing Activities, Past and Future Climates and Hydrology at Yucca Mountain

Pursuant to its authority under section 5051 of Public Law 100–203, the Nuclear Waste Policy Amendments Act of 1987, the Nuclear Waste Technical Review Board will hold its summer meeting on Tuesday and Wednesday, July 9–10, 1996, in Denver, Colorado. The meeting will be held at the Red Lion Hotel, 3203 Quebec Street, Denver, CO 80207; (tel) 303–321–3333; (fax) 303–329–9179. To receive the preferred rate, reservations must be made by June 16, 1996; please tell the hotel you are attending the Nuclear Waste Technical Review Board meeting. The meeting is open to the public and will begin at 8:30 A.M. both days.

The Board will explore two basic themes during the meeting: activities in the Yucca Mountain exploratory studies facility (ESF), and past and future climates and their associated effects on the hydrology at Yucca Mountain. The Board has invited representatives of the Office of Civilian Radioactive Waste Management (OCRWM) and its contractors, as well as independent consultants, to make presentations on the issues. Specific topics concerning the ESF will include updates on tunnel boring machine operations and scientific activities, the status of the waste isolation strategy, thermal testing, and advanced conceptual design for the repository. Presentations on climate and its effects on hydrology will include the geological structure at Yucca Mountain, historical perspectives and current views on both climate and hydrology, and climate modeling. Time has been set aside on the second day for a round-table discussion of all topics covered by the meeting.

Time also has been set aside for public comment and questions on both days. To ensure that everyone wishing to speak is provided time to do so, the Board encourages those who have comments to sign the *Public Comment Register*, which will be located at the sign-in table. Depending on the number of people wishing to speak, a time limit may have to be set on the length of individual remarks. However, written comments of any length may be submitted for the record.

The Nuclear Waste Technical Review Board was created by Congress in the Nuclear Waste Policy Amendments Act of 1987 to evaluate the technical and scientific validity of activities undertaken by the DOE in its program to manage the disposal of the nation's spent nuclear fuel and defense high-level waste. In that same legislation, Congress directed the DOE to characterize a site at Yucca Mountain, Nevada, for its suitability as a potential location for a permanent repository for the disposal of that waste.

Transcripts of this meeting will be available via e-mail, on computer disk, or on a library-loan basis in paper format from Davonya Barnes, Board staff, beginning August 21, 1996. For further information, contact Frank Randall, External Affairs, 1100 Wilson Boulevard, Suite 910, Arlington, Virginia 22209; (Tel) 703–235–4473; (Fax) 703–235–4495.

Dated: June 4, 1996.

William Barnard,

Executive Director, Nuclear Waste Technical Review Board.

[FR Doc. 96–14375 Filed 6–6–96; 8:45 am]

BILLING CODE 6820–AM–M

RAILROAD RETIREMENT BOARD

Agency Forms Submitted for OMB Review

SUMMARY: In accordance with the Paperwork Reduction Act of 1995 (44 U.S.C. Chapter 35), the Railroad Retirement Board has submitted the following proposal(s) for the collection of information to the Office of Management and Budget for review and approval.

Summary of Proposal(s)

(1) *Collection title:* Application for Survivor Insurance Annuities.

(2) *Form(s) submitted:* AA–17, AA–17b, AA–18, AA–19, AA–19a, and AA–20.

(3) *OMB Number:* 3220–0030.

(4) *Expiration date of current OMB clearance:* June 30, 1996.

(5) *Type of request:* Revision of a currently approved collection.

(6) *Respondents:* Individuals or households.

(7) *Estimated annual number of respondents:* 5,765.

(8) *Total annual responses:* 5,765.

(9) *Total annual reporting hours:* 2,864.

(10) *Collection description:* Under Section 2(d) of the RRA, monthly survivor annuities are payable to surviving widow(er)s, parents, unmarried children, and in certain cases, divorced wives (husbands), mother (fathers), remarried widow(er)s and grandchildren or deceased railroad employees. The collection obtains information needed by the Railroad

Retirement Board for determining entitlement to and amount of the annuity applied for.

ADDITIONAL INFORMATION OR COMMENTS: Copies of the form and supporting documents can be obtained from Chuck Mierzwa, the agency clearance officer (312–751–3363). Comments regarding the information collection should be addressed to Ronald J. Hodapp, Railroad Retirement Board, 844 North Rush Street, Chicago, Illinois 60611–2092 and the OMB reviewer, Laura Oliven (202–395–7316), Office of Management and Budget, Room 10230, New Executive Office Building, Washington, D.C. 20503.

Chuck Mierzwa,

Clearance Officer.

[FR Doc. 96–14341 Filed 6–6–96; 8:45 am]

BILLING CODE 7905–01–M

Agency Forms Submitted for OMB Review

SUMMARY: In accordance with the Paperwork Reduction Act of 1995 (44 U.S.C. Chapter 35), the Railroad Retirement Board has submitted the following proposal(s) for the collection of information to the Office of Management and Budget for review and approval.

SUMMARY OF PROPOSAL(S):

(1) *Collection title:* Application for Reimbursement for Hospital Services in Canada.

(2) *Form(s) submitted:* AA–104.

(3) *OMB Number:* 3220–0086.

(4) *Expiration date of current OMB clearance:* July 31, 1996.

(5) *Type of request:* Extension of a currently approved collection.

(6) *Respondents:* Individuals or households.

(7) *Estimated annual number of respondents:* 45.

(8) *Total annual responses:* 45.

(9) *Total annual reporting hours:* 8.

(10) *Collection description:* The Railroad Retirement Board administers the Medicare program for persons covered by the railroad retirement system. The collection obtains the information needed to determine eligibility for and the amount due for covered hospital services received in Canada.

ADDITIONAL INFORMATION OR COMMENTS: Copies of the form and supporting documents can be obtained from Chuck Mierzwa, the agency clearance officer (312–751–3363). Comments regarding the information collection should be addressed to Ronald J. Hodapp, Railroad Retirement Board, 844 North Rush Street, Chicago, Illinois 60611–2092 and the OMB reviewer, Laura Oliven (202–395–7316), Office of Management and Budget, Room 10230, New Executive Office Building, Washington, D.C. 20503.

Chuck Mierzwa,

Clearance Officer.

[FR Doc. 96–14411 Filed 6–6–96; 8:45 am]

BILLING CODE 7905–01–M

SECURITIES AND EXCHANGE COMMISSION

[Release No. 34–37272; File No. 10–100]

Exempted Exchanges; AZX, Inc.; Order Amending Exemption Order and Granting Amendment to Application for Exemption From Registration as an Exchange Under Section 5 of the Securities Exchange Act of 1934; Final Order

June 3, 1996.

I. Summary

AZX, Inc., formerly known as Wunsch Auction Systems; Inc., has requested that the Commission amend the exemption order pursuant to which AZX, Inc. operates the Arizona Stock Exchange (''AZX'') without registration as a national securities exchange.[1] The proposal was published for comment and two comment letters were received.[2] After evaluating the proposal and the comment letters, the Commission concludes that AZX will continue to meet the statutory standard governing the granting of an exemption from registration as a national securities exchange under the Securities Exchange Act of 1934 (''Act''). Accordingly, the Commission hereby amends AZX's Exemption Order to: (1) grant AZX Inc.'s amended application for exemption from registration as a national securities exchange, to permit AZX to operate a single auction during regular trading hours; and (2) make technical corrections to the Exemption Order to conform to changes in the operation of the system since the Exemption Order was issued, and to clarify reporting requirements applicable to AZX under the Exemption Order.

II. Description of AZX

AZX is a single-price auction system that facilitates secondary market trading of registered equity securities by permitting institutional and broker-dealer participants to enter buy and sell orders for those securities and have those orders executed at an ''equilibrium'' price determined by the interaction of the orders.[3] Bid orders entered at prices equal to or above the equilibrium price, and offer orders entered at prices equal to or below the equilibrium price, are eligible for execution for the equilibrium price. After the equilibrium price is determined, Investment Technology Group, Inc. (''ITG''), the crossing broker for AZX, executes eligible orders on the basis of time priority.[4]

AZX's single-price auctions are currently conducted outside the regular trading hours of the New York Stock Exchange (''NYSE'') and the Nasdaq system, at 5:00 p.m. and 5:30 p.m. (ET) each trading day. During the period immediately proceding an auction, AZX participants may enter orders into the system by specifying the name of the security and the price and size of their order. Orders may be entered into any of four separate AZX ''books'': the Open Book, Reserve Book, Balanced Book, and Match Book.

The Open Book contains orders eligible for the auction and displays those orders on an anonymous basis to all AZX participants. The Reserve Book conceals orders from other participants until a *contra* side order is entered into either the Open Book or the Reserve Book. If such a *contra* side order is entered, the order placed in the Reserve Book will move into the Open Book, where it will become eligible for the auction. The Balanced Book conceals orders from other AZX participants until immediately prior to the auction, at which time any orders that match each other, and still meet parameters set by the participants regarding net dollars bought or sold,[5] are matched in the Open Book. The Match Book accommodates orders that are not eligible for the auction (because, for

[1] Securities Exchange Act Release No. 28899 (February 20, 1991), 56 FR 8377 (''Exemption Order''). AZX also operates pursuant to a no-action letter regarding non-registration as a broker-dealer, clearing agency, transfer agent, and securities information processor. Letter regarding Wunsch Auction Systems, Inc. (February 28, 1991) (''No-action Letter'').

[2] Securities Exchange Release No. 35922 (June 30, 1995), 60 FR 35445 (July 7, 1995), soliciting comment on *Amendment to Application for Exemption from Registration as a National Securities Exchange.* File No. 10–100 (May 31, 1995).

[3] AZX is more fully described in the Exemption Order and in the No-action Letter.

[4] Where there is not sufficient eligible interest on one side of a transaction to satisfy all eligible interest on the other side of the transaction, eligible orders entered earlier in time will be filled first under AZX's time priority rules.

[5] For example, a participant may specify that it is willing to purchase *ABC* stock, and sell *PQR* stock, but only if the proceeds received from the sale of *PQR* exceed by a specified amount the money spent on purchasing *ABC.*

example, the participant requires the order to be matched at the closing price for the security on the NYSE and not at any other price, such as the price discovered in the AZX auction). The Match Book permits such orders to be prematched prior to the auction and routed for execution to ITG.[6]

AZX participants may gain access to the system by establishing a communications connection between their computer terminals and the central host computer, through direct line, public data network, or dial-in via modem.[7] Alternatively, AZX participants who are customers of ITG may request that unfilled orders for AZX-eligible securities be routed by the QuantEX system to other trading environments or the next AZX auction.[8]

III. The Proposed Morning Auction

In its amendment to its application for exempting from exchange registration, AZX Inc. proposes to operate AZX during regular trading hours.[9] Under the proposal, AZX would conduct a daily auction, at a fixed time between 9:45 and 10 a.m. (ET), in addition to its current operation outside of regular trading hours.[10] Trading in the proposed morning auction would be limited to Nasdaq National Market (''NNM'') securities.[11] AZX initially plans to trade only 15 of the approximately 4,023 Nasdaq National Market securities, but will expand as demand warrants.[12]

AZX's proposed morning auction is identical to AZX's current evening auctions in terms of its: Participation criteria; means of access to the system; algorithm for discovering the ''equilibrium'' price; confirmation, clearance and settlement of matched transactions; and commission structure.

The proposed morning auction will differ from AZX's current evening sessions in terms of:

- *Eligible securities.* Securities eligible to be traded in the morning auction will be limited to NNM securities. Both Nasdaq and exchange-listed securities are eligible for trading in the evening auctions.
- *Time period for order entry.* The time period during which a participant may enter a limit order for auction trading will be limited to the period from 9:00 a.m. to ''auction end'' time—a minimum of 45 minutes and a maximum of one hour. Participants in the evening auctions may enter orders within a two-hour period (from 3:00 p.m. to 5:00 p.m.) prior to the 5:00 p.m. auction, and a one-half hour period prior to the 5:30 p.m.
- *Price increments for entered orders.* Orders must be entered in ⅛ point price increments, and are limited to ''odd'' sixteenths (*i.e.,* 1/16, 3/16, 5/16, etc.). By contrast, participants in the evening auctions enter orders in increments of 1/16 point.[13]
- *Absemce of Match Book Service.* The Match Book, which is available for the evening sessions, is not available for the morning auction.
- *Same-day transaction reporting.* ITG, the clearing and crossing broker for AZX, will have same-day reporting obligations with respect to securities traded during the morning auction.[14]

IV. Comment Letters

The Commission received two comments on the AZX proposal, from the Pacific Stock Exchange (''PSE'') and the National Association of Securities Dealers, Inc. (''NASD'').[15] In their comment letters, the NASD and PSE stated that they did not oppose AZX's operation during regular trading hours. Both commenters, however, expressed concern that the new morning auction would likely cause AZX's volume to increase so as to invalidate the limited volume exemption. Furthermore, they stated that the operation of the morning auction should subject AZX to all the rules and regulations to which registered national securities exchanges are subject. In particular, they argued that AZX should be treated similarly to the Chicago Match System operated by the Chicago Stock Exchange (''CHX'') and be regulated as a national securities exchange.[16] Finally, they raised issues dealing with AZX's compliance with the Act and the NASD's rules.

V. Discussion

A. Consistency of Morning Operation With Exemption Order and No-action Letter

The current Exemption Order and NO-action Letter are premised on AZX's conducting auctions at discrete, relatively infrequent points of time, the absence of broker-dealer participants who have market-maker type obligations, and after-hours operation as elements that justify an expectation that AZX will have only limited volume as required for an exemption under Section 5 of the Act.[17] The Commission reserved the right to apply further conditions or rescind the exemption if circumstances changed or AZX did not operate as originally represented.[18] The Commission did not preclude AZX from conducting a morning trading session during regular trading hours. Rather, the Commission envisioned that AZX would have to file such a proposed change as an amendment to its original application for exemption pursuant to Rule 6a–1 under the Act,[19] and that the Commission would evaluate the proposal to determine whether AZX would continue to warrant an exemption from exchange registration.

The Commission believes that the mere existence of an early morning trading session should not change AZX's status as an exempted exchange. As previously, AZX will continue to conduct a very limited number of auctions at discrete, relatively infrequent points of time and will not have broker-dealer participants who owe market-maker type obligations to AZX. The limited volume exemption

[6] The Match Book feature operates subject to AZX's: (1) Aggregating Match Book volume with AZX auction volume in its monthly reports pursuant to the Exemption Order, for purposes of the limited volume exemption; (2) separately reporting Match Book volume in its monthly reports; (3) limiting Match Book trading to securities registered pursuant to Sections 12(b) and 12(g) of the Act; and (4) limiting the service to transactions in which both sides of the trade are entered by the same participant.

[7] Information regarding the prices and volumes of orders in the Open Book and the equilibrium prices and volumes of completed transactions in AZX auctions are available through Bridge Information Systems (''Bridge'') and through AZX's ''home page'' on the World Wide Web. Orders cannot be entered into AZX through these two media.

[8] QuantEX, which is owned and operated by ITG, allows ITG customers to transmit orders to: The NYSE and American Stock Exchange, an automated trading system operated by ITG called the Portfolio System for Institutional Trading (''POSIT''), the regional stock exchanges, over-the-counter market makers, selected broker-dealers, the ITG trading desk, and AZX.

[9] ''Regular trading hours'' refers to the time period in which the NYSE and the Nasdaq system permit trading, *i.e.,* 9:30 a.m. to 4 p.m. (ET) each trading day.

[10] AZX will notify the Commission of the exact time of the morning auction prior to commencing operation.

[11] NNM securities are the top tier of securities quoted on the Nasdaq system. They are subject to a transaction reporting plan approved by the Commission and to last sale reporting requirements.

[12] AZX is not required to seek separate Commission approval in order to add additional NNM securities to the list of securities eligible for regular-hours trading.

[13] The purpose of the minimum ⅛ increment is to encourage early entry of Open Book orders, by protecting those orders from being out-bid or out-offered by small amounts, such as sixteenths, at the end of the auction. The purpose of requiring the minimum increments to fall on odd sixteenths is to allow a participant to enter an order that may potentially trade at a price that is within that spread in the Nasdaq market.

[14] *See* Section 11A of the Act, 15 U.S.C. § 78K–1; and Schedule D to the NASD's By-Laws, NASD Manual (CCH) § 1867, at 1637–1643.

[15] Letters from: Richard G. Ketchum, Executive Vice President, NASD, dated August 11, 1995 (''NASD Letter'') and David P. Semak, Vice President, PSE, dated September 1, 1995 (''PSE Letter''), included in File No. 10–100.

[16] In particular, the NASD notes that AZX should not be able to trade more NNM securities than other exchanges do through unlisted trading privileges, *i.e.* 500 maximum.

[17] Exemption Order, 56 FR at 8380.

[18] Exemption Order, 56 FR at 8383.

[19] 17 CFR 240.6a–1.

continues to be premised on AZX's average daily volume (including both day and after-hours auctions) remaining below the average daily volume of the lowest volume national securities exchange.[20] The average daily volume currently experienced by AZX is well below that of the lowest volume national securities exchange.[21] Moreover, given the wide range of alternative trading environments for registered equity securities available to investors during regular trading hours, the mere operation of a single AZX morning session does not seem likely to cause AZX's volume to exceed the volume of any national securities exchange. Should AZX's volume to exceed the volume of any national securities exchange. Should AZX's volume exceed the limited volume threshold, however, the Commission may rescind the exemption and require AZX to register as a national securities exchange under Section 6 of the Act.[22]

B. Equal Regulation in the Securities Markets

Both the NASD and PSE expressed a concern that regulatory fairness was jeopardized by allowing AZX to operate without being bound by the rules applicable to other exchanges. As an example, they cited the operation of the Chicago Match System which was regulated according to the rules and regulations governing national securities exchanges.[23]

The Chicago Match System was a facility of the Chicago Stock Exchange (''CHX''), a national securities exchange; as such, it was regulated as part of the CHX. By comparison, the Commission determined not to regulate AZX as a national securities exchange due to low volume. Consequently, the AZX auction is not a facility of any national securities exchange. Accordingly, the requirements that apply to the facilities of national securities exchanges do not necessarily apply to AZX.

C. Surveillance

As a condition of the Exemption Order, AZX undertook to conduct surveillance with respect to after-hours trading to detect, among other things, potential insider trading and manipulative abuses. In their comment letters, the NASD and PSE expressed concern regarding whether those surveillance procedures remain adequate with respect to the regular-hours auction, because the regular-hours auction will take place while other markets for AZX-eligible securities are operating.[24] In response to these concerns, AZX has agreed to implement a number of additional surveillance procedures to detect possible market manipulation and insider trading. The new surveillance procedures, among other things, require AZX to compare auction prices and bids and offers entered into AZX with activity in the primary trading market for the security, and to monitor the effects of an order cancellation or order revision on the primary market.

D. Limitations on Unlisted Trading Privileges

The NASD argued that AZX should be subject to the restrictions on unlisted trading privileges (''UTP'') to which national securities exchanges are subject under Temporary Commission Approval of the Joint Industry Plan for Exchange Trading of Nasdaq National Market Securities (''Temporary Approval''), *i.e.*, no participant national securities exchange may trade more than 500 NNM securities on an unlisted basis.[25] AZX proposes to trade only 15 NNM securities at the outset, although this number may increase. By virtue of its limited volume exemption, AZX is not subject to rules and regulations governing national securities exchanges, and thus would not be subject to the limits in place under the Temporary Approval. Moreover, premising AZX's operation on limited volume places a restraint on AZX volume to which national securities exchanges trading NNM securities based on UTP are not subject. It would be needless at this time to further restrain AZX volume by limiting the number of NNM securities it may trade. However, the Commission reserves the right to revisit this issued should the number of NNM securities traded in the morning auction approach 500.

E. Compliance with NASD Rules

1. *Limit Order Protection.* The NASD expressed concern regarding whether AZX's procedures adequately facilitate surveillance of possible violations of the NASD's Limit order Protection Interpretation (''Interpretation'') by AZX participants who are NASD members.[26] The Interpretation generally prohibits a member firm that accepts and holds an unexecuted customer limit order from its own customer or the customer of another member from ''trading ahead'' of the customer limit order at a price that would satisfy the customer limit order, unless it also executes the limit order.

Under its surveillance procedures, AZX will maintain records of every order entered into the system and will provide the NASD, on request, with access to the identities of participants who have entered specific orders. In addition, pursuant to the enhanced surveillance procedures it has adopted, AZX also will monitor instances in which an order is entered at a price that is outside the Nasdaq best bid and offer for a particular security. These procedures will facilitate detection of possible instances of violation of the NASD's Interpretation.

2. *Proposed NAqcess Rules.* The NASD also raised an issue regarding the applicability of the proposed NAqcess rules to AZX participants who are NASD members. NAqcess is a proposed Nasdaq system intended to provide small customer orders with limit order

[20] The Exemption Order states that the ''volume levels of fully regulated national securities exchanges provide a useful benchmark,'' and the Commission would be concerned if the volume of an exempted exchange ''exceeded that of any of the fully regulated national securities exchanges.'' Exemption Order, 56 FR at 8380.

[21] The Philadelphia Stock Exchange (''Phlx'') is currently the lowest volume national securities exchange. For calendar year 1995, the average daily volume of the Phlx was approximately 5,965,346 shares. In its comment letter the NASD argues that, in determining whether AZX is no longer eligible for the limited volume exemption, the Commission is required to apply, as its benchmark for limited volume, the average daily volume reported by the Cincinnati Stock Exchange (''CSD'') as of the date of the Exemption Order.

Contrary to the NAS's argument, nothing in the Exemption Order limits the Commission's review to the volume level of the CSE at the time of the Exemption Order. Rather, the Commission's statement that it would be concerned over the competitive implications of AZX volume exceeding ''any of the fully regulated national securities exchanges'' focuses on current volume reported by the national securities exchanges. Accordingly, at the present time, a comparison of AZX's volume levels to the reported volume of the Phlx is an appropriate benchmark.

[22] The Exemption Order states that ''[s]hould the Commission learn that any of the conditions set forth in this Order or otherwise imposed upon the granting of this exemption have been breached * * * the Commission will commence a review to determine whether to rescind the exemption.'' Exemption Order, 56 FR 8383.

[23] The Chicago Match System recently ceased operations.

[24] In view of the potential impact that daylight trading could have on trading in other markets, the NASD suggested that AZX specify the exact time of the daylight auction. AZX states in its amendment to its exemptive application that it will establish a set time for the auction, to be announced prior to conducting the initial auction.

[25] Until last year, participant national securities exchanges were limited to 100 NNM securities. In August 1995, however, the Commission expanded the number or NNM securities that a participant national securities exchange could trade to 500 securities. *See* Securities Exchange Act Release No. 36102 (August 14, 1995), 60 FR 43626.

[26] NASD Manual (CCH), Rules of Fair Practice, Art. III, Section 1, § 2151.07.

protection and price improvement.[27] In general, the NAqcess rules as proposed would apply to AZX participants who are NASD members.

The enhanced surveillance procedures adopted by AZX appear to be consistent with the proposed NAqcess rules. Because the NAqcess rules are currently in the proposing stage, however, it is premature to consider the need for possible changes to AZX's surveillance procedures. The Commission will address this issue prior to the approval of any NAqcess rules.

3. *Short Sale Rule.* The NASD notes that its short sale rule would apply to AZX participants who are NASD members.[28] AZX has taken measures to promote compliance with the NASD short sale rule by its members. Specifically, orders that are entered into AZX and that constitute short sales are put in the Balanced Book and not the Open Book. At the time of the auction, if it appears that certain of these orders, if executed, would breach the short sale restriction, then they will not be allowed to participate in the auction.

F. Terms and Conditions of the Exemption

All of the original terms and conditions of the Exemption Order remain in effect. The Amended Order notes, in this connection, that the following reporting requirements of the Order may be satisfied by compliance with the recordkeeping and reporting requirements contained in Rule 17a–23 under the Act:[29]

- The number and identity of system participants;
- The volume of business (expressed in dollars, transactions, and shares) transacted through the system;
- Instances when system participants failed to deliver securities or make payment (expressed in transactions, shares and dollars); and
- A list of securities trading on the system.

The following information also must continue to be reported pursuant to the Exemption Order:

- The identity of applicants denied participation and reasons for the denial;
- The number of auctions conducted; and
- The prices at which particular blocks of securities were sold during the auctions.

[27] *See* Securities Exchange Act Release No. 36548 (December 1, 1995), 60 FR 63092.

[28] Art. III, Section 48 of the Rules of Fair Practice, NASD Manual (CCH) § 2200H, at 2216.

[29] Rule 17a–23 requires registered broker-dealer sponsors of certain automated trading systems (''broker-dealer trading systems'') to make and keep current certain records, and file reports with the Commission (and in certain circumstances, with the appropriate self-regulatory organization) regarding the operation of the system. ITG, the crossing broker for AZX, is subject to Rule 17a–23 with respect to the operation of AZX.

VI. Conclusion

The Commission has reviewed AZX's amendment to its application for exemption from registration as a national securities exchange and has determined that AZX continues to qualify for the limited volume exemption under the Act. As it found in the Exemption Order, the Commission finds that, by reason of the limited volume of transactions effected on AZX, it is not practicable and not necessary or appropriate in the public interest or for the protection of investors to require AZX's registration as a national securities exchange, subject to the conditions described herein.

It is therefore ordered that AZX's Exemption Order be amended to: (1) Grant AZX Inc.'s amended application for exemption from registration as a national securities exchange; and (2) reflect changes to the operation of the system as set forth herein.

By the Commission.

Jonathan G. Katz,

Secretary.

[FR Doc. 96–14399 Filed 6–6–96; 8:45 am]

BILLING CODE 8010–01–M

Issuer Delisting; Notice of Application to Withdraw From Listing and Registration; (Bitwise Designs, Inc., Common Stock, $.001 Par Value) File No. 1–13276

June 3, 1996.

Bitwise Designs, Inc. (''Company'') has filed an application with the Securities and Exchange Commission (''Commission''), pursuant to Section 12(d) of the Securities Exchange Act of 1934 (''Act'') and Rule 12d2–2(d) promulgated thereunder, to withdraw the above specified security (''Security'') from listing and registration on the Boston Stock Exchange Incorporated (''BSE'').

The reasons alleged in the application for withdrawing the Security from listing and registration include the following:

According to the Company, the Security is presently listed on the BSE, PSE and the Nasdaq SmallCap Market. The Company wishes to delist its Security from the BSE. The decision to delist from the BSE has been occasioned by reason of the Company's listing on the PSE. PSE and Nasdaq quotations are readily available to the public from various media sources, and there appears to be no continuing benefit either to the Company or its shareholders for continued listing on the BSE. In addition, delisting from the BSE will save the Company redundant listing fees. The Company's Security will continue to be traded on the PSE and the Nasdaq SmallCap Market.

Any interested person may, on or before June 24, 1996, submit by letter to the Secretary of the Securities and Exchange Commission, 450 Fifth Street, N.W., Washington, D.C. 20549, facts bearing upon whether the application has been made in accordance with the rules of the exchanges and what terms, if any, should be imposed by the Commission for the protection of investors. The Commission, based on the information submitted to it, will issue an order granting the application after the date mentioned above, unless the Commission determines to order a hearing on the matter.

For the Commission, by the Division of Market Regulation, pursuant to delegated authority.

Jonathan G. Katz,

Secretary.

[FR Doc. 96–14355 Filed 6–6–96; 8:45 am]

BILLING CODE 8010–01–M

[Rel. No. IC—22000; International Series Release No. 990; File No. 812–10136]

The Chase Manhattan Bank, N.A. and Chemical Bank; Notice of Application

May 31, 1996.

AGENCY: Securities and Exchange Commission (''SEC'').

ACTION: Notice of application for exemption under the Investment Company Act of 1940 (the ''Act'').

APPLICANTS: The Chase Manhattan Bank, N.A. (''Chase'') and Chemical Bank (''Chemical'').

RELEVANT ACT SECTIONS: Order requested under section 6(c) of the Act for an exemption from section 26(a) (2)(D) of the Act.

SUMMARY OF APPLICATION: Applicants request an order that would amend a prior order (the ''Prior Order'')[1] granted to Chase which permits Chase, as trustee for certain unit investment trusts (''UITs''), to deposit trust assets in the custody of the Euroclear System (''Euroclear'') and Cedel Bank S.A. (''Cedel''). The requested order would substitute the entity surviving the anticipated merger of Chase and Chemical as the party to which relief is granted. Chemical will survive the merger and change its name to ''The Chase Manhattan Bank.''

FILING DATE: The application was filed on May 8, 1996.

[1] *The Chase Manhattan Bank, N.A.*, Investment Company Act Release Nos. 21673 (Jan. 16, 1996) (notice) and 21751 (Feb. 13, 1996) (order).

HEARING OR NOTIFICATION OF HEARING: An order granting the application will be issued unless the SEC orders a hearing. Interested persons may request a hearing by writing to the SEC's Secretary and serving applicants with a copy of the request, personally or by mail. Hearing requests should be received by the SEC by 5:30 p.m. on June 25, 1996 by proof of service on applicants, in the form of an affidavit or, for lawyers, a certificate of service. Hearing requests should state the nature of the writer's interest, the reason for the request, and the issues contested. Persons who wish to be notified of a hearing may request notification by writing to the SEC's Secretary.

ADDRESSES: Secretary, SEC, 450 Fifth Street, N.W., Washington, D.C. 20549. Applicants, c/o Daniel L. Goelzer, Esq., Baker & McKenzie, 815 Connecticut Avenue, N.W., Washington, D.C. 20006.

FOR FURTHER INFORMATION CONTACT: David W. Grim, Staff Attorney, at (202) 942–0571, or Robert A. Robertson, Branch Chief, at (202) 942–0564 (Division of Investment Management, Office of Investment Company Regulation).

SUPPLEMENTARY INFORMATION: the following is a summary of the application. The complete application may be obtained for a fee at the SEC's Public Reference Branch.

Applicants' Representations

1. Chase is a national banking association, regulated by the Comptroller of the Currency under the National Bank Act. At December 31, 1995, Chase had shareholders' equity in excess of $8.065 billion. Through its Global Securities Services division, Chase provides custody and related services to global institutional investors, including U.S. registered investment companies.

2. Chemical is a banking institution, organized under the laws of the State of New York. It is regulated as a bank by the Superintendent of Banks of New York, and is a member bank of the Federal Reserve System. At December 31, 1995, Chemical had shareholders' equity in excess of $8.18 billion. Through its Geoserve Securities Services division, Chemical provides custody and related services to global institutional investors, including U.S. registered investment companies.

3. On March 31, 1996, Chase's parent holding company, The Chase Manhattan Corporation, and Chemical's parent holding company, Chemical Banking Corporation, merged. Chemical Banking Corporation was the surviving entity in the merger, and it has changed its name to ''The Chase Manhattan Corporation.'' During July 1996, it is anticipated that Chase will be merged into Chemical (the ''Merger''). Chemical will survive the Merger, and will change its name to ''The Chase Manhattan Bank'' (''New Chase''). Applicants state that, upon the Merger, New Chase will succeed by operation of law to the rights and obligations of Chase, including Chase's obligations under the trust indentures it has with various UITs predicated on the Prior Order.

4. Euroclear and Cedel (together, the ''Transnational Depositories'') are among the largest clearance and custody systems in the world. The Transnational Depositories were organized principally to provide a simple, economic, and automated means of settling secondary market transactions in internationally traded securities, regardless of the geographical location of the parties to the transaction. Many U.S. institutions, including numerous investment companies registered under the Act, routinely hold substantial assets through the facilities of these entities.

5. The Prior Order permits Chase to place the assets of certain UITs in the custody of the Transnational Depositories. After the Merger, however, Chase, the party to which the Prior Order was granted and which is bound by the conditions thereunder, will cease to exist. Accordingly, applicants request an order to amend the Prior Order to substitute New Chase as the party to which relief is granted. Such an amendment will ensure that UITs may continue utilizing the services of the Transnational Depositories through the New Chase after the Merger under the same conditions as are contained in the Prior Order.

6. Under the conditions in the Prior Order, each indenture pursuant to which Chase acts as trustee for any UIT that utilizes the custody services of either of the Transnational Depositories must contain provisions under which (i) Chase agrees to indemnify the UIT against any loss occurring as a result of a Transnational Depository's willful misfeasance, reckless disregard, bad faith, or gross negligence in performing custodial duties, and (ii) Chase agrees to perform all the duties assigned by rule 17f–5, as now in effect or as it may be amended in the future, to the boards of directors of management investment companies. In addition, Chase must maintain certain records regarding the basis for the choice or the continued use of a particular Transnational Depository and to make such records available for inspection by unitholders and by the staff of the SEC. Chase also must provide disclosure regarding foreign securities and foreign custody required for management investment companies by Forms N–1A and N–2 in the prospectus of any UIT relying on the relief.

Applicants' Legal Conclusions

1. Under sections 2(a)(5) and 26(a)(1) of the Act, the trustee of a UIT must be a bank that is subject to regulation by the U.S. government or one of the states. Section 26(a)(2)(D) requires that the trust indenture provide that the trustee ''shall have possession of all securities and other property in which the funds of the trust are invested * * * and shall segregate and hold the same in trust * * * until distribution thereof to the security holders of the trust.'' Under these sections, the only foreign entity that qualifies as a UIT custodian is an overseas branch of a U.S. bank.[2]

2. Section 6(c) provides that the SEC may exempt any person, security, or transaction from any provision of the Act or any rule or regulation thereunder, if and to the extent that such exemption is necessary or appropriate in the public interest and consistent with the protection of investors and the purposes fairly intended by the policy and provisions of the Act.

3. Applicants request an order under section 6(c) for an exemption from section 26(a)(2)(D) that would amend the Prior Order. The Prior Order exempted Chase, any UIT for which Chase serves as trustee, any co-trustee or subcustodian thereof, and any sponsor of such UIT from section 26(a)(2)(D) to the extent necessary to permit Chase to maintain securities and other assets of such UITs in the custody of the Transnational Depositories. Applicants request an order to amend the Prior Order to substitute New Chase as the party to which relief is granted.

4. Applicants believe that the requested amendment is necessary and appropriate in the public interest to permit UITs for which Chase serves as trustee to continue to use the arrangements currently in place under the Prior Order after the Merger, and to permit new UIT customers for which New Chase may serve in such capacity to have access to such arrangements. Absent an amendment, New Chase may be unable to offer these services to UITs under the existing order. To require current UIT customers of Chase to bear the substantial expense and effort of implementing alternative arrangements merely because of the Merger would be

[2] *See* Custody of Investment Company Assets Outside the United States, Investment Company Act Release No. 21259 (July 27, 1995).

contrary to the best interests of investors, and contrary to public policy.

5. Applicants believe that the assets to which the Prior Order relate will be as effectively protected by New Chase as they have been by Chase. Chase qualifies as a ''bank'' for purposes of section 26, since it is a banking institution organized under the laws of the United States and has an aggregate capital, surplus, and undivided profits substantially in excess of the $500,000 required by the Act. Chemical also qualifies as a ''bank'' for section 26 purposes, since it is a member of the Federal Reserve System and has capital substantially in excess of the $500,000 minimum. New Chase will continue to qualify as such a ''bank'' on and after the Merger. With respect to global custody services, New Chase will combine the size, expertise, and reputation of both Chase and Chemical. UITs for which Chase acts as trustee and custodian will therefore be at least as well-protected after the Merger as before.

6. Applicants state that New Chase will be required to indemnify UITs against loss of assets held by the Transnational Depositories to the same extent that Chase is required to do so under the Prior Order. Also, applicants believe that securities deposited in the Transnational Depositories are as well-protected as if they were deposited with a foreign branch of a U.S. bank, or shipped to the U.S. for foreign custody. The Transnational Depositories are among the largest and most experienced clearance and custody systems for internationally-traded securities in the world.

7. Applicants state that sections 26(a)(1) and 26(a)(2)(D) were adopted for essentially the same purposes as section 17(f) of the Act. The purpose of section 17(f) is to ensure that U.S. investment companies hold securities in a safe manner that protects the interests of their shareholders. The purpose of rule 17f–5 is to relieve U.S. investment companies of the expense and inconvenience of transferring assets to the custody of a U.S. bank or other qualified custodian outside the jurisdiction in which the primary trading market for those assets is located and to reduce the risks inherent in maintaining assets outside the U.S. The requested amendment would permit New Chase to continue offering the arrangements under the same terms and conditions as set forth in the Prior Order and is, therefore, consistent with these purposes.

8. Applicants state that in granting the Prior Order, the SEC determined that the arrangements permitted by that order satisfy the standards of section 6(c). Applicants believe that the substitution of New Chase for Chase as the party to which the terms and conditions of those orders apply in no way detracts from the continuing validity of the SEC's determinations. Therefore, applicants believe the requested order satisfies these standards.

Applicants' Condition

Applicants agree that the order granting the requested relief shall be subject to the condition that, following the merger of Chase and Chemical, New Chase will comply with all of the terms and conditions set forth in the Prior Order as if such order had been granted to New Chase.

For the Commission, by the Division of Investment Management, under delegated authority.

Jonathan G. Katz,

Secretary.

[FR Doc. 96–14359 Filed 6–6–96; 8:45 am]

BILLING CODE 8010–01–M

[Release No. 35–26526]

Filings Under the Public Utility Holding Company Act of 1935, As Amended (''Act'')

May 31, 1996.

Notice is hereby given that the following filing(s) has/have been made with the Commission pursuant to provisions of the Act and rules promulgated thereunder. All interested persons are referred to the application(s) and/or declaration(s) for complete statements of the proposed transaction(s) summarized below. The application(s) and/or declaration(s) and any amendments thereto is/are available for public inspection through the Commission's Office of Public Reference.

Interested persons wishing to comment or request a hearing on the application(s) and/or declaration(s) should submit their views in writing by June 24, 1996, to the Secretary, Securities and Exchange Commission, Washington, D.C. 20549, and serve a copy on the relevant applicant(s) and/or declarant(s) at the address(es) specified below. Proof of service (by affidavit or, in case of an attorney at law, by certificate) should be filed with the request. Any request for hearing shall identify specifically the issues of fact or law that are disputed. A person who so requests will be notified of any hearing, if ordered, and will receive a copy of any notice or order issued in the matter. After said date, the application(s) and/or declaration(s), as filed or as amended, may be granted and/or permitted to become effective.

Columbia Gas System, Inc., et al. (70–8471)

Columbia Gas System, Inc. (''Columbia''), 20 Montchanin Road, Wilmington, Delaware, 19807, a registered holding company; nineteen wholly-owned subsidiary companies of Columbia,[1] all of which are engaged in the natural gas business; twelve subsidiary companies of TriStar Ventures (''TriStar Ventures Subsidiaries''); [2] Columbia Service Partners, Inc. (''Columbia Service''), 121 Hill Pointe Drive, Suite No. 100, Cannonsburg, Pennsylvania, 15317, a non-utility subsidiary of Columbia; and TriStar System, Inc. (''TriStar System''), 20 Montchanin Road, Wilmington, Delaware, 19807, a non-utility

---

[1] Columbia Gas of Pennsylvania, Inc. (''Columbia Pennsylvania''), 200 Civic Center Drive, Columbus, Ohio, 43215; Columbia Gas of Ohio, Inc. (''Columbia Ohio''), 200 Civic Center Drive, Columbus Ohio, 43215; Columbia Gas of Maryland, Inc. (''Columbia Maryland''), 200 Civic Center Drive, Columbus, Ohio, 43215; Columbia Gas of Kentucky, Inc. (''Columbia Kentucky''), 200 Civic Center Drive Columbus, Ohio, 43215; Commonwealth Gas Services, Inc. (''Commonwealth Services''), 200 Civic Center Drive, Columbus, Ohio, 43215; Columbia Gulf Transmission Co. (''Columbia Gulf''), 1700 MacCorkle Avenue, S.E., Charleston, West Virginia, 25314; Columbia Gas Development Corp. (''Columbia Development''), One Riverway, Houston, Texas, 77056; Columbia Natural Resources, Inc. (''Columbia Resources''), 900 Pennsylvania Avenue, Charleston, West Virginia, 25302; Columbia Coal Gasification Corp. (''Columbia Coal''), 900 Pennsylvania Avenue, Charleston, West Virginia, 25302; Columbia Energy Services Corp. (''Columbia Services''), 121 Hill Pointe Drive, Suite No. 100, Cannonsburg, Pennsylvania, 15317; Columbia Gas System Service Corp. (''Service Corporation''), 20 Montchanin Road, Wilmington, Delaware, 19807; Columbia Propane Corp. (''Columbia Propane''), 800 Moorefield Park Drive, Richmond, Virginia, 23236; Commonwealth Propane, Inc. (''Commonwealth Propane''), 800 Moorefield Park Drive, Richmond, Virginia, 23236; TriStar Ventures Corp. (''TriStar Ventures''), 20 Montchanin Road, Wilmington, Delaware, 19807; TriStar Capital Corp. (''TriStar Capital''), 20 Montchanin Road, Wilmington, Delaware, 19807; Columbia Atlantic Trading Corp (''Columbia Atlantic''), 20 Montchanin Road, Wilmington, Delaware, 19807; Columbia LNG Corp., 20 Montchanin Road, Wilmington, Delaware, 19807; Columbia Gas Transmission Corp. (''Gas Transmission''), 1700 MacCorkle Avenue, S.E., Charleston, West Virginia, 25314; and Columbia Energy Marketing Corp. (''Energy Marketing''), 121 Hill Pointe Drive, Suite No. 100, Cannonsburg, Pennsylvania, 15317.

[2] TriStar Pedrick Limited Corporation, TriStar Pedrick General Corporation, TriStar Binghamton Limited Corporation, TriStar Binghamton General Corporation, TriStar Vineland Limited Corporation, TriStar Vineland General Corporation, TriStar Rumford Limited Corporation, TriStar Georgetown General Corporation, TriStar Georgetown Limited Corporation, TriStar Fuel Cells Corporation, TVC Nine Corporation, and TVC Ten Corporation, all of 20 Montchanin Road, Wilmington, Delaware, 19807.

subsidiary of Columbia, have filed a post-effective amendment to the application-declaration previously filed under Section 6, 7, 9(a), 10, 12(b), 12(c), and 12(f) of the Act and Rules 42, 43, 45, and 46 thereunder.

By Order dated December 22, 1994 (HCAR No. 26201), Columbia, and fourteen of the subsidiary companies,[3] were authorized to recapitalize Columbia Gulf, Columbia Development, and Columbia Coal, to implement the 1995 and 1996 Long-Term and Short-Term Financing Programs of the Subsidiaries, and to continue the Intrasystem Money Pool (''Money Pool'') through 1996.

By order dated March 14, 1995 (HCAR No. 26251), the TriStar Ventures Subsidiaries were authorized to invest in, but not to borrow from, the Money Pool. By order dated November 8, 1995 (HCAR No. 26404), Gas Transmission and Energy Marketing were authorized to invest in, but not to borrow from, the Money Pool. By Order dated February 16, 1996 (HCAR No. 26471), Columbia was authorized to revise the cost of money on all short-term advances from, and the investment rate for money invested in, the Money Pool.

Columbia now proposes that Columbia Service and TriStar System be included as potential investors in the Money Pool.[4] Columbia also requests authorization, through December 31, 1996, to include in the Money Pool as potential investors any new direct or indirect subsidiaries engaged in new lines of business established pursuant to an order of the Commission or any new direct or indirect subsidiaries engaged in existing lines of business.

General Public Utilities Corporation, et al. (70–8829)

General Public Utilities Corporation, 100 Interpace Parkway, Parsippany, New Jersey 07054, a registered holding company (''GPU''), and its subsidiaries, Jersey Central Power & Light Company, 300 Madison Avenue, Morristown, New Jersey 07962 (''JCP&L''), Metropolitan Edison Company, P.O. Box 16001, Reading, Pennsylvania 19640 (''Met-Ed''), Pennsylvania Electric Company, P.O. Box 16001, Reading, Pennsylvania 19640 (''Penelec'') and Energy Initiatives, Inc., One Upper Pond Road, Parsippany, New Jersey 07054 (''EI''); (together with GPU, JCP&L, Met-Ed and Penelec, the ''EIM Applicants''), and GPU Service Corporation, 100 Interpace Parkway, Parsippany, New Jersey 07054 (''GPUSC''), have filed an application-declaration pursuant to sections 9(a), 10, 12(b) and 13(b) of the Act and rules 45, 90 and 91 thereunder.

The EIM Applicants believe that there are business opportunities that they may wish to pursue which involve energy information and management (''EIM'') systems. EIM systems employ interactive technology which, among other things, enables customers to automatically and remotely control HVAC and other appliance usage in response to variable energy pricing, thus providing customers with more control over their electric usage and costs. EIM systems also allow utilities to implement various demand-side management and load-control programs, and to remotely read the customers' meters. EIM systems also store customer load profile data and allow utilities to remotely access such data for forecasting and marketing purposes. EIM systems may also provide opportunities for real-time inter-active communications with customers with respect to a wide variety of information, products and services that are not exclusively energy-related. Communications may be effectuated through, but not limited to, fiber optics, radio, paging or personal communications systems.[5]

One or more of the EIM Applicants have been engaged in discussions with nonassociate EIM system companies (each, an ''EIMCo'') which design, manufacture, fabricate, integrate, market and distribute EIM system and components, or the enabling technology for EIM systems, which are in various stages of development, testing and deployment. These discussions, to date, have addressed two different approaches to possible involvement with EIM systems. First, JCP&L, Met-Ed and Penelec have discussed limited deployment of EIM systems to their respective electric utility customers within their respective service territories as part of a pilot program, looking towards possible broad-based deployment among their respective electric utility customers.[6] In addition, one or more of the EIM Applicants may acquire an interest in the business of designing, manufacturing, fabricating, integrating, marketing and distributing EIM systems to non-customers both within and beyond the boundaries of the service territories of JCP&L, Met-Ed and Penelec (collectively, the ''EIM Business''), either directly, through the acquisition of securities of an EIMCo, or, alternatively, through new wholly-owned or partly-owned subsidiary compan(ies), to be formed (each, an ''EIM Subsidiary''), or through a joint venture involving any of the foregoing and an EIMCo or an EIMCo affiliate (each, and ''EIM JV'').[7] Notwithstanding the foregoing, GPU will not acquire a direct interest in the EIM Business other than through the acquisition of securities of an EIMCo.

The EIM Applicants therefore propose to: (1) Engage in the EIM Business; and (2) acquire the securities of an EIMCo or one or more EIM Subsidiaries or, directly or indirectly, one or more EIM JVs. It is also requested that the Commission authorized the provision of goods and services relating to the EIM Business: (1) To JCP&L, Met-Ed and Penelec by EI or any EIM Subsidiaries or EIM JVs; and (2) to any EIM Subsidiaries and EIM JVs by GPUSC, all of which goods and services will be provided at cost in compliance with Rules 90 and 91 under the Act. For this purpose, each EIM Applicant, EIM Subsidiary and EIM JV will maintain separate financial records relating to the EIM Business. The aggregate amount of the EIM Applicants' investment in the EIM Business will not exceed $50 million through December 31, 1998.

The EIM Applicants or any EIM Subsidiaries or EIM JVs may provide financing to utility customers within the respective service territories of JCP&L, Met-Ed or Penelec through direct loan and operating or finance lease arrangements in connection with, for example, a customer's purchase of EIM systems either from an EIM Applicant, affiliate or a third party. The ability to make such loans would include participation in or facilitating customer

[3] Columbia Pennsylvania, Columbia Ohio, Columbia Maryland, Columbia Kentucky, Commonwealth Services, Columbia Gulf, Columbia Development, Columbia Resources, Columbia Coal, Services Corporation, Columbia Propane, Commonwealth Propane, TriStar Capital, and Columbia Atlantic.

[4] Service Partners was formed on March 21, 1996 by Columbia Services to provide energy-related services to customers of local distribution companies (''LDCs'') affiliated with Columbia and non-affiliated LDCs served by Columbia interstate natural gas transmission companies. TriStar System was formed on September 28, 1995 by TriStar Ventures to engage in natural gas vehicle activities.

[5] *See The Southern Company*, Holding Co. Act Release No. 26221 (January 25, 1995) (Southern was authorized to develop, purchase, construct, own or operate a prototype energy management communications network to provide both energy-related and nonenergy-related services, including fire, intrusion and health alarm monitoring services).

[6] *See Leidy Hub, Inc.*, Holding Co. Act Release No. 26048 (May 6, 1994) (National Fuel Gas Company was authorized to make a series of equity investments in Leidy Hub, Inc., which was developing and commercializing an automatic remote meter reading system).

[7] *See Eastern Utilities Assoc. et al.*, Holding Co. Act Release No. 26232 (February 15, 1995) (EUA was permitted to expand its energy management services business beyond its service territory and without regard to the 50% revenue limitation previously imposed by the Commission in similar matters).

access to government energy-related loan programs. Interest on loans and imputed interest on lease payments will range from zero percent to the then prevailing market rate. The obligations may either be secured or unsecured, will generally be evidenced by promissory notes and will have maturities not exceeding five years. The aggregate amount of such outstanding obligations at any one time will not exceed $20 million.

The authorization requested with respect to the acquisition of securities of an EIMCo or any EIM Subsidiaries or EIM JVs shall expire upon the first to occur of: (1) December 31, 1998; and (2) the adoption by the Commission of proposed rule 58 (HCAR No. 26313, June 20, 1995) or such other rule, regulation or order as shall exempt the transactions as proposed from section 9(a) of the Act. The authorization requested with respect to financing transaction shall, upon the enactment of Rule 58, extend to any energy-related company, as defined in Rule 58, which is a subsidiary company of GPU and engaged in the EIM Business.

For the Commission, by the Division of Investment Management, pursuant to delegated authority.

Jonathan G. Katz,

Secretary.

[FR Doc. 96–14356 Filed 6–6–96; 8:45 am]

BILLING CODE 8010–01–M

[Investment Company Act Release No. 21999; 812–10010]

GMO Trust and Grantham, Mayo, Van Otterloo & Co.; Notice of Application

May 31, 1996.

AGENCY: Securities and Exchange Commission (''SEC'').

ACTION: Notice of application for an order under the Investment Company Act of 1940 (the ''Act'').

APPLICANTS: GMO Trust and Grantham, Mayo, Van Otterloo & Co. (''GMO'').

RELEVANT ACT SECTIONS: Order requested under section 6(c) of the Act from sections 12(d)(1) (A) and (B) of the Act and under sections 6(c) and 17(b) of the Act from section 17(a) of the Act.

SUMMARY OF APPLICATION: Applicants request an order that would permit certain series of GMO Trust to operate as ''funds of funds.''

FILING DATES: The application was filed on February 23, 1996 and amended on May 23, 1996.

HEARING OR NOTIFICATION OF HEARING: An order granting the application will be issued unless the SEC orders a hearing. Interested persons may request a hearing by writing to the SEC's Secretary and serving applicants with a copy of the request, personally or by mail. Hearing requests should be received by the SEC by 5:30 p.m. on June 25, 1996, and should be accompanied by proof of service on applicants, in the form of an affidavit, or, for lawyers, a certificate or service. Hearing requests should state the nature of the writer's interest, the reason for the request, and the issues contested. Persons may request notification of a hearing by writing to the SEC's Secretary.

ADDRESSES: Secretary, SEC, 450 Fifth Street, N.W., Washington, D.C. 20549. Applicants, 40 Rowes Wharf, Boston, MA 02110.

FOR FURTHER INFORMATION CONTACT: Marianne H. Khawly, Staff Attorney, at (202) 942–0562, or Alison E. Baur, Branch Chief, at (202) 942–0564 (Division of Investment Management, Office of Investment Company Regulation).

SUPPLEMENTARY INFORMATION: The following is a summary of the application. The complete application may be obtained for a fee from the SEC's Public Reference Branch.

Applicants' Representations

1. GMO Trust is an open-end series management investment company organized as a Massachusetts business trust. GMO Trust's existing and prospective shareholders are highly sophisticated individual investors and institutional investors such as endowments, foundations, international tax-exempt organizations, and ERISA/pension funds. The minimum initial investment in the GMO Trust is $10,000,000. GMO Trust consists of 22 separate series (each a ''Portfolio''), including: International Equity Allocation Fund; Global Equity Allocation Fund; U.S. Equity with International Allocation Fund; and Global Balanced Allocation Fund (collectively, the ''Allocation Funds''). Each Allocation Fund is designed to serve the needs and objectives of long-term investors who seek a simple and cost-effective response to their asset allocation demands.

2. GMO is a Massachusetts general partnership registered as an investment adviser under the Investment Advisers Act of 1940 that serves each Portfolio, including the Allocation Funds, as investment adviser and principal underwriter. With respect to each Portfolio, GMO voluntarily reduces its management fees and bears certain expenses to the extent that each portfolio's total annual operating expenses, excluding certain expenses such as brokerage commissions, extraordinary expenses, and transfer taxes exceed specified percentages of net assets (the ''Voluntary Expense Limits''). The Voluntary Expense Limits vary among Portfolios primarily because of each Portfolio's type of asset class and the style of GMO's management. In the case of each Allocation Fund, GMO expects to waive any advisory fees, and bear expenses, to the extent that the Allocation Fund's total operating costs would exceed the relevant Voluntary Expense Limit.

3. Applicants propose a fund of funds arrangement whereby each Allocation Fund will invest in shares of Portfolios other than Allocation Funds (the ''Underlying Funds''). Applicants request that any relief granted pursuant to the application also apply to any future Portfolio and to any open-end management investment company that currently or in the future is part of the same ''group of investment companies,'' as defined in rule 11a–3 under the Act, as GMO Trust (collectively, the ''GMO Funds'').[1]

Applicants' Legal Analysis

1. Section 12(d)(1)(A) of the Act provides that no registered investment company may acquire securities of another investment company if such securities represent more than 3% of the acquired company's outstanding voting stock, more than 5% of the acquiring company's total assets, or if such securities, together with the securities of any other acquired investment companies, represent more than 10% of the acquiring company's total assets. Section 12(d)(1)(B) provides that no registered open-end investment company may sell its securities to another investment company if the sale will cause the acquiring company to own more than 3% of the acquired company's voting stock, or if the sale will cause more than 10% of the acquired company's voting stock to be owned by investment companies.

2. Section 6(c) of the Act provides that the SEC may exempt persons or transactions from any provision of the Act if such exemption is necessary or appropriate in the public interest and consistent with the protection of investors and the purposes fairly intended by the policy and provisions of the Act. Applicants request an order

[1] Rule 11a–3 under the Act defines a ''group of investment companies'' as two or more companies that: (a) hold themselves out to investors as related companies for purposes of investment and investor services; and (b) that have a common investment adviser or principal underwriter.

permitting each Allocation Fund to acquire shares of the Underlying Funds in excess of the limits imposed under section 12(d)(1).

3. The restrictions in section 12(d)(1) were intended to prevent certain abuses perceived to be associated with the pyramiding of investment companies, including: (a) undue influence by the fund holding company over its underlying funds through the threat of large scale redemptions of the securities of the underlying funds; (b) layering of costs, *e.g.* sales loads, advisory fees, and administrative costs; and (c) creation of structure that could cause investor confusion. For the following reasons, applicants believe that the proposed arrangement will not create these dangers and, therefore, that the requested relief is appropriate.

4. Applicants argue that the proposed arrangement will be structured to minimize large scale redemption concerns. Each Allocation Fund seeks to provide existing and prospective long-term investors with a sophisticated asset allocation service on a cost-effective basis. This investment objective will not result in large-scale redemptions from the Underlying Funds, but rather will involve small adjustments on a continuing basis to maintain balance in the allocation of investors' assets among the Underlying Funds. Thus, applicants assert that the operation of each Allocation Fund actually decreases the possibility for undue influence to any particular Underlying Fund through a threat of redemption.

5. Applicants state that the proposed arrangement will not raise the fee layering concerns contemplated by section 12(d)(1). The proposed arrangement will not involve the layering of advisory fees since, before approving any advisory contract the board of trustees of each Allocation Fund, including a majority of the trustees who are not ''interested persons,'' as defined in section 2(a)(19) of the Act, will find that the advisory fees charged under the contract are based on services provided that are in addition to, rather than duplicative of, services provided under any Underlying Fund advisory contract. In addition, the proposed structure will not involve layering of sales charges. Currently, neither the Allocation Funds nor the Underlying Funds impose sales charges or 12b–1 fees. Although one or more GMO Funds may charge a sales load in the future, any sales charges or service fees relating to the shares of an Allocation Fund will not exceed the limits set forth in Article III, section 26 of the Rules of Fair Practice of the National Association of Securities Dealers, Inc. (''NASD'') when aggregated with any sales charges or service fees that an Allocation Fund pays relating to Underlying Portfolio shares. Applicants contend that although an Allocation Fund shareholder may pay advisory fees for the Allocation Funds directly and advisory fees for the Underlying Funds indirectly, these advisory fees are not unfair nor excessive because the shareholder is obtaining different services through different advisory contracts.

6. Applicants also state that the proposed arrangement will not be confusing to investors. Applicants assert that each Allocation Fund's structure will illuminate rather than confuse its shareholders about the value and nature of their holdings. The prospectus for each Allocation Fund will state its investment objective and apprise shareholders of what Portfolios constitute Underlying Funds for their investment. In addition, GMO Trust's existing and prospective shareholders are highly sophisticated individuals or institutional investors able to understand and bear the risks of such investments.

7. Section 17(a) of the Act makes it unlawful for an affiliated person of a registered investment company to sell securities to, or purchase securities from, the company. The Allocation Funds and the Underlying Funds are considered affiliated persons because they are under the common control of GMO. An Underlying Fund's issuance of its shares to an Allocation Fund may be considered a sale prohibited by section 17(a).

8. Section 17(b) of the Act provides that the SEC shall exempt a proposed transaction from section 17(a) if evidence establishes that: (a) The terms of the proposed transaction are reasonable and fair and do not involve overreaching; (b) the proposed transaction is consistent with the policies of the registered investment company involved; and (c) the proposed transaction is consistent with the general provisions of the Act. Applicants request an exemption under sections 6(c) and 17(b) to allow the above transactions.

9. Applicants believe that the proposed transactions meet the standards of sections 6(c) and 17(b). The consideration paid for the sale and redemption of Underlying Fund shares will be without a sales load and at the same price that is available to other investors. The Allocation Funds' purchase and sale of Underlying Fund shares is consistent with the Allocation Funds' policies, as set forth in GMO Trust's registration statements. Applicants also believe that the proposed transactions are consistent with the general purposes of the Act.

Applicants' Conditions

Applicants agree that the order granting the requested relief shall be subject to the following conditions:

1. Each Allocation Fund and each Underlying Fund will be part of the same ''group of investment companies,'' as defined in rule 11a–3 under the Act.

No Underlying Fund will acquire securities of any other investment company in excess of the limits contained in section 12(d)(1)(A) of the Act.

3. A majority of the board of trustees of GMO Trust will not be ''interested persons,'' as defined in section 2(a)(19) of the Act.

4. Before approving any advisory contract for an Allocation Fund under section 15, the board of trustees including a majority of the trustees who are not ''interested persons'' as defined in section 2(a)(19), shall find that advisory fees charged under the contract are based on services provided that are in addition to, rather than duplicative of, services provided under any Underlying Fund's advisory contract. Such finding, and the basis upon which the finding was made, will be recorded fully in the minute books of GMO Trust.

5. Any sales charges or distribution-related fees charged with respect to shares of an Allocation Fund, when aggregated with any sales charges and distribution-related fees paid by the Allocation Fund with respect to shares of the Underlying Funds, shall not exceed the limits set forth in Article III, section 26, of the Rules of Fair Practice of the NASD.

6. Applicants agree to provide the following information, in electronic format, to the Chief Financial Analyst of the SEC's Division of Investment Management: monthly average total assets for each Allocation Fund and each of its Underlying Funds; monthly purchases and redemptions (other than by exchange) for each Allocation Fund and each of its Underlying Funds; monthly exchanges into and out of each Allocation Fund and each Underlying Fund; month-end allocations of each Allocation Fund portfolio's assets among the Underlying Funds; annual expense ratios for each Allocation Fund and each Underlying Fund; and a description of any vote taken by the shareholders of any Underlying Fund, including a statement of the percentage of votes cast for and against the proposal by each Allocation Fund and by the other shareholders of the Underlying Fund. Such information will be

provided as soon as reasonably practicable following each fiscal year-end of the GMO Trust (unless the Chief Financial Analyst shall notify applicants in writing that such information need no longer be submitted).

For the Commission, by the Division of Investment Management, under delegated authority.

Jonathan G. Katz,

Secretary.

[FR Doc. 96–14360 Filed 6–6–96; 8:45 am]

BILLING CODE 8010–01–M

Issuer Delisting; Notice of Application To Withdraw From Listing and Registration; (INCSTAR Corporation, Common Stock, $.01 Par Value) File No. 1-9800

June 3, 1996.

INCSTAR Corporation (''Company'') has filed an application with the Securities and Exchange Commission (''Commission''), pursuant to Section 12(d) of the Securities Exchange Act of 1934 (''Act'') and Rule 12d2–2(d) promulgated thereunder, to withdraw the above specified security (''Security'') from listing and registration on the American Stock Exchange, Inc. (''Amex'').

The reasons alleged in the application for withdrawing the Security from listing and registration include the following:

According to the Company, its Board of Directors unanimously approved resolutions on February 28, 1996 to withdraw the Security from listing on the Amex and instead, to list the Security on the National Association of Securities Dealers Automated Quotations National Market System (''Nasdaq/NMS'').

The decision of the Board followed a thorough study of the matter and was based upon the belief that listing the Security on the Nasdaq/NMS will be more beneficial to the Company's stockholders than the present listing on the Amex for the following reasons:

(a) The Nasdaq/NMS system of competing market makers should result in increased visibility and sponsorship for the Security of the Company than is currently the case under the single specialist system on the Amex;

(b) Greater liquidity and less volatility in prices per share when trading volume is light might be expected as a result of listing on the Nasdaq/NMS than is presently the case on the Amex;

(c) Listing on the Nasdaq/NMS system might be expected to result in there being a greater number of market makers in the Security of the Company and expanded capital base available for trading in such stock; and

(d) Because it might be expected that a larger number of firms will make a market in the Security, it might also be expected that there will be a greater interest in information and research reports respecting the Company and as a result there may be an increase in the number of institutional research and advisory reports reaching the investment community with respect to the Company.

Any interested person may, on or before June 24, 1996 submit by letter to the Secretary of the Securities and Exchange Commission, 450 Fifth Street, N.W., Washington, D.C. 20549, facts bearing upon whether the application has been made in accordance with the rules of the exchanges and what terms, if any, should be imposed by the Commission for the protection of investors. The Commission, based on the information submitted to it, will issue an order granting the application after the date mentioned above, unless the Commission determines to order a hearing on the matter.

For the Commission, by the Division of Market Regulation, pursuant to delegated authority.

Jonathan F. Katz,

Secretary.

[FR Doc. 96–14354 Filed 6–6–96; 8:45 am]

BILLING CODE 8010–01–M

[Release No. 34–37257; International Series Release No. 989; File No. SR–CBOE–96–33]

Self-Regulatory Organizations; Notice of Filing and Immediate Effectiveness of Proposed Rule Change by the Chicago Board Options Exchange, Incorporated Relating To Strike Prices for Options on the Mexican Indice de Precios y Cotizaciones

May 30, 1996.

Pursuant to Section 19(b)(1) of the Securities Exchange Act of 1934 (''Act''), 15 U.S.C. 78c(b)(1), notice is hereby given that on May 30, 1996, the Chicago Board Options Exchange, Incorporated (''CBOE'' or ''Exchange'') filed with the Securities and Exchange Commission (''Commission'' or ''SEC'') the proposed rule change as described in Items, I, II, and III below, which items have been prepared by the CBOE. The Commission is publishing this notice to solicit comments on the proposed rule change from interested persons.

I. Self-Regulatory Organization's Statement of the Terms of Substance of the Proposed Rule Change

The CBOE hereby gives notice that it proposes to add Interpretation .06 to Rule 24.9, Terms of Index Option Contracts, concerning the use of ''implied forward levels'' instead of the ''current index level'' in determining the strike prices to add for options on the Indice de Precios y Cotizaciones (''IPC'' or ''Index'').

The text of the proposed rule change is available at the Office of the Secretary, CBOE and at the Commission.

II. Self-Regulatory Organization's Statement of the Purpose of, and Statutory Basis for, the Proposed Rule Change

In its filing with the Commission, the CBOE included statements concerning the purpose of and basis for the proposed rule change and discussed any comments it received on the proposed rule change. The text of these statements may be examined at the places specified in Item IV below. The CBOE has prepared summaries, set forth in sections (A), (B), and (C) below, of the most significant aspects of such statements.

(A) Self-Regulatory Organization's Statement of the Purpose of, and Statutory Basis for, the Proposed Rule Change

The purpose of this rule proposal is to permit the Exchange to list strike prices on the IPC based upon the ''implied forward level'' instead of upon the current index level. Currently, under Interpretation .05 to Rule 24.9, the Exchange may list strike prices, except in the case of long-term options, up to the lesser of 50 points or 15% above or below the current index level. In the case of long-term options (other than reduced value long-term options), the Exchange may list strike prices within 25% of the current index level.

Because of the high prevailing market interest rates in Mexico (currently about 28%), CBOE believes that centering strike prices around the current index value is impractical. Although IPC options are traded in terms of U.S. dollars, they are priced using these high Mexican rates. According to CBOE, high interest rates imply a high cost of holding the underlying securities because an investor must borrow at 28% to purchase the Mexican securities) or forego earning 28% on money previously invested). Therefore, over a given period of time, for example three months, the expected value of the IPC is approximately 7% (28% times ¼

year) higher than the current value.[1] Based on a current index value of approximately 335,[2] 7% implies a forward price of the Index of about 360 at the end of three months. Therefore, the strike prices for a three month option would need to bracket 360 rather than 335.

To address this problem, the Exchange intends to center the strike prices around the implied forward price of the IPC, rather than around the current index value. The implied forward price will change for each expiration month since one component of determining the implied forward price is the time to expiration. The formula for determining the implied forward price will be the index level times e^r*t, where r equals the current Mexican interest rate,[3] and t equals the time to expiration.

CBOE will adhere to all other rules, interpretations and policies regarding strike price introduction, with the exception that the index level will be calculated as described above. CBOE will monitor the implied forward rate on a continuous basis and CBOE market-makers will monitor the rate continuously for purposes of trading the options. Finally, CBOE will issue a circular to the membership describing this policy for centering strike prices around the implied forward level.

By interpreting the current rules in such a manner that the Exchange may list strike prices that more accurately reflect the expected value of the IPC, CBOE believes the proposed rule change is consistent with and furthers the objectives of Section 6(b)(5) of the Act, in that it is designed to perfect the mechanisms of a free and open market and to protect investors and the public interest.

(B) Self-Regulatory Organization's Statement on Burden on Competition

The Exchange does not believe that the proposed rule change will impose any inappropriate burden on competition.

[1] This same pricing situtation occurs in options based on U.S. securities, however, since U.S. interest rates are low relative to Mexico, the effect is quite small and does not necessitate the need for pricing off of an implied forward level.

[2] Full value IPC index options are priced at 1/10 the value of the IPC Index.

[3] The Mexican interest rate generally used in the calculation would be the Cetes rate with the appropriate maturity.

(C) Self-Regulatory Organization's Statement on Comments on the Proposed Rule Change Received From Members, Participants, or Others

No comments were solicited or received with respect to the proposed rule change.

III. Date of Effectiveness of the Proposed Rule Change and Timing for Commission Action

Because the foregoing rule change constitutes a stated policy, practice or interpretation with respect to the enforcement of an existing CBOE rule, it has become effective pursuant to Section 19(b)(3)(A) of the Act and subparagraph (e) of Rule 19b–4 thereunder. At any time within 60 days of the filing of the proposed rule change, the Commission may summarily abrogate such rule change if it appears to the Commission that such action is necessary or appropriate in the public interest, for the protection of investors, or otherwise in furtherance of the purposes of the Act.

IV. Solicitation of Comments

Interested persons are invited to submit written data, views, and arguments concerning the foregoing. Persons making written submissions should file six copies thereof with the Secretary, Securities and Exchange Commission, 450 Fifth Street, N.W., Washington, DC 20549. Copies of the submission, all subsequent amendments, all written statements with respect to the proposed rule change that are filed with the Commission, and all written communications relating to the proposed rule change between the Commission and any person, other than those that may be withheld from the public in accordance with the provisions of 5 U.S.C. 552, will be available for inspection and copying in the Commission's Public Reference Section, 450 Fifth Street, NW., Washington, DC 20549. Copies of such filing will also be available for inspection and copying at the principal office of the CBOE. All submissions should refer to the File No. SR–CBOE–96–33 and should be submitted by June 28, 1996.

For the Commission, by the Division of Market Regulation, pursuant to delegated authority.[4]

Jonathan G. Katz,

Secretary.

[FR Doc. 96–14401 Filed 6–6–96; 8:45 am]

BILLING CODE 8010–01–M

[4] 17 CFR 200.30–3(a)(12) (1994).

[Release No. 34–37264; File No. SR–CBOE–96–26]

Self-Regulatory Organizations; Notice of Filing and Immediate Effectiveness of Proposed Rule Change and Amendment No. 1 Thereto by the Chicago Board Options Exchange, Incorporated Relating to Continuous Representation of Orders

May 31, 1996.

Pursuant to Section 19(b)(1) of the Securities Exchange Act of 1934 (''Act''), 15 U.S.C. 78s(b)(1), notice is hereby given that on April 18, 1996, the Chicago Board Options Exchange, Incorporated (''CBOE'' or ''Exchange'') filed with the Securities and Exchange Commission (''Commission'' or ''SEC'') the proposed rule change as described in Items I, II, and III below, which Items have been prepared by the CBOE. On May 30,1996, the CBOE filed Amendment No. 1 to the proposal.[1] The Commission is publishing this notice to solicit comments on the proposed rule change from interested persons.

I. Self-Regulatory Organization's Statement of the Terms of Substance of the Proposed Rule Change

The CBOE is hereby setting forth its interpretation of the meaning of an existing Exchange rule which concerns the obligation of a floor broker to continuously represent certain orders at the trading station where the option class is traded. The text of the proposed rule change is available at the Office of the Secretary, CBOE and at the Commission.

II. Self-Regulatory Organization's Statement of the Purpose of, and Statutory Basis for, the Proposed Rule Change

In its filing with the Commission, the CBOE included statements concerning the purpose of and basis for the proposed rule change and discussed any comments it received on the proposed rule change. The text of these statements may be examined at the places specified in Item IV below. The CBOE has prepared summaries, set forth in sections (A), (B), and (C) below, of the most significant aspects of such statements.

[1] Amendment No. 1 corrects a technical error in Exhibit A of the CBOE's filing, and is not substantive in nature. *See* Letter from Timothy Thompson, Senior Attorney, CBOE, to James McHale, Attorney, Office of Market Supervision, Division of Market Regulation, Commission, dated May 16, 1996 (''Amendment No. 1'').

A. Self-Regulatory Organization's Statement of the Purpose of, and Statutory Basis for, the Proposed Rule Change

The purpose of the proposed rule change is to make a clarifying amendment to Interpretation .04 of Rule 6.73, which requires a floor broker to continuously represent certain orders in the trading crowd.

Paragraph (a) of Rule 6.73, Responsibilities of Floor Brokers, states that a floor broker must use due diligence in handling an order to execute the order at the best price or prices available to the broker, in accordance with Exchange rules. In further clarifying a broker's responsibility to use due diligence, Interpretation .04 of Rule 6.73 states that a floor broker's use of due diligence includes the immediate and continuous representation of ''market or marketable orders'' at the trading station where the option class represented by the order is traded. The use of the term ''marketable'' has lead to some ambiguity in the interpretation of the Rule, however, because some members have assumed that the term refers to marketable limit orders which are limit orders where the specified price at which to sell is below or at the current bid, or if to buy is at or above the current offer. In fact, however, the interpretation should read, and has been interpreted to mean, that a floor broker must immediately and continuously represent market orders or limit orders where the specified price to sell is at or below the current offer, or if to buy is at or above the current bid. Because this interpretation will require floor brokers to continuously and immediately represent some orders that are neither market orders or marketable limit orders, *i.e.* those orders whose limit price is between the bid and offer, the Exchange thought it was appropriate to revise the interpretation to clarify the intent of the term marketable. The proposed rule change will ensure that floor brokers will represent an order in a trading crowd when that order is likely to be executed soon, even if it is not immediately executable.

By clarifying an existing rule of the Exchange in order to clear up any possible ambiguity, the CBOE believes that the proposed rule change is consistent with and furthers the objectives of Section 6(b)(5) of the Act, in that it is designed to perfect the mechanisms of a free and open market and to protect investors and the public interest.

B. Self-Regulatory Organization's Statement on Burden on Competition

The exchange does not believe that the proposed rule change will impose any inappropriate burden on competition.

C. Self-Regulatory Organization's Statement on Comments on the Proposed Rule Change Received From Members, Participants, or Others

No written comments were solicited or received with respect to the proposed rule change.

III. Date of Effectiveness of the Proposed Rule Change and Timing for Commission Action

Because the foregoing rule change constitutes a stated policy with respect to the meaning, administration, or enforcement of an existing rule, it has become effective pursuant to Section 19(b)(3)(A) of the Act and Rule 19b–4 thereunder. At any time within 60 days of the filing of the proposed rule change, the Commission may summarily abrogate such rule change if it appears to the Commission that such action is necessary or appropriate in the public interest, for the protection of investors, or otherwise in furtherance of the purposes of the Act.

IV. Solicitation of Comments

Interested persons are invited to submit written data, views, and arguments concerning the foregoing. Persons making written submissions should file six copies thereof with the Secretary, Securities and Exchange Commission, 450 Fifth Street, N.W., Washington, D.C. 20549. Copies of the submission, all subsequent amendments, all written statements with respect to the proposed rule change that are filed with the Commission, and all written communications relating to the proposed rule change between the Commission and any person, other than those that may be withheld from the public in accordance with the provisions of 5 U.S.C. 552, will be available for inspection and copying in the Commission's Public Reference Section, 450 Fifth Street, N.W., Washington, D.C. 20549. Copies of such filing will also be available for inspection and copying at the principal office of the CBOE. All submissions should refer to the File No. SR–CBOE–96–26 and should be submitted by June 28, 1996.

For the Commission, by the Division of Market Regulation, pursuant to delegated authority.

Jonathan G. Katz,

Secretary.

[FR Doc. 96–14402 Filed 6–6–96; 8:45 am]

BILLING CODE 8010–01–M

[Release No. 34–37265; File No. SR–CHX–96–13]

Self-Regulatory Organizations; Order Granting Accelerated Approval of Proposed Rule Change and Amendment No. 1 and Notice of Filing and Order Granting Accelerated Approval of Amendment No. 2 by the Chicago Stock Exchange, Incorporated Relating to the Modification of the Hours of the Exchange's Primary Trading Session and the Establishment of a Post Primary Trading Session

May 31, 1996.

I. Introduction

On April 9, 1996, the Chicago Stock Exchange, Incorporated (''CHX'' or ''Exchange'') submitted to the Securities and Exchange Commission (''Commission''), pursuant to Section 19(b)(1) of the Securities Exchange Act of 1934 (''Act''),[1] and Rule 19b–4 thereunder,[2] a proposed rule change to modify the hours of the Exchange's Primary Trading Session and to establish a Post Primary Trading Session. On May 10, 1996 the Exchange submitted to the Commission Amendment No. 1 to the proposed rule change.[3] The proposed rule change, as amended by Amendment No. 1, was published for comment in Securities Exchange Act Release No. 37204 (May 13, 1996), 61 FR 24988 (May 17, 1996). On May 29, 1996 the Exchange submitted Amendment No. 2 to the proposed rule change.[4] This order

[1] 15 U.S.C. 78s(b)(1).

[2] 17 CFR 240.19b–4.

[3] *See* Letter from David T. Rusoff, Attorney, Foley & Lardner, to Ivette Lopez, Assistant Director, Division of Market Regulation, SEC, dated May 9, 1996 (''Amendment No. 1'').

[4] *See* Letter from David T. Rusoff, Attorney, Foley & Lardner, to Ivette Lopez, Assistant Director, Division of Market Regulation, SEC, dated May 29, 1996 (''Amendment No. 2'') Amendment No. 2 amends Article XX, Rule 2 to clarify that this rule also applies to the Post Primary Trading Session and Interpretation and Policy .01 to this rule to correct an inaccurate cross-reference. In addition, Amendment No. 2 revises the proposed changes to Article IX, Rule 10(b) to clarify that if a security's primary market is the Pacific Stock Exchange, Incorporated (''PSE''), the Primary Trading Session for that security shall end no later than 3:00 p.m. (CT). Amendment No. 2 also revises the proposed changes to Article IX, Rule 10(b) to remove the extension of the Primary Trading Session for CHX exclusive issues from 3:00 p.m. to 3:30 p.m. (CT)

approves the proposed rule change, as amended by Amendment Nos. 1 and 2, on an accelerated basis.

II. Description

Currently, the Exchange's Primary Trading Session runs from 8:30 a.m. to 3:00 p.m. (CT), Monday through Friday. One purpose of the proposed rule change is to amend Article XX, Rule 10(b) to conform the Exchange's Primary Trading Session hours for each traded security to the trading hours during which the security is traded on its primary market.[5] If a security's primary market is the CHX, the Primary Trading Session for such security will continue to run from 8:30 a.m. to 3:00 p.m. (CT).[6]

The proposed rule change would also add a Post Primary Trading Session (''PPS'') on the trading floor.[7] The PPS for orders and securities designated as eligible for the PPS would be for one-half hour after the close of the regular trading session on the security's primary market.[8] Securities in which the CHX is the primary market will be eligible for the PPS.

Only orders designated as eligible for the PPS would be eligible for execution during the PPS.[9] Market, limit and contingent order types currently acceptable would be accepted for PPS if so designated. In this regard, GTX orders would only be accepted if specifically designated as PPS-eligible. The Exchange's MAX System will not be available as an automated execution system or as an automated routing system during the PPS. As a result, order sending firms must contact a floor broker in order to send an order to the CHX for execution during the PPS.[10] Because the PPS will be an extension of the Exchange's daily auction market, all the Exchange's rules applicable to floor trading during the Exchange's Primary Trading Session, as modified by proposed Interpretation and Policy .05 of Rule 37, Article XX, will continue to be applicable.[11] For example, specialists will be required to quote markets and trading will occur based on real-time price and quote changes.

To accomplish the foregoing, the Exchange is amending Article XX, Rules 1 and 2 and Article XXI, Rule 1 to make it clear that these rules also apply to the PPS.[12] The Exchange is also amending Interpretation and Policy .02 of Rule 37, Article XX to make it clear that although GTX orders are executable after the close the PPS (*i.e.*, in the Exchange's Secondary Trading Session), they are executed based on trading that occurs in a security in a primary market's after-hours closing price trading session, at that closing price, and are not executable based on trading in, or the closing price established in, the PPS.[13]

In addition, the Exchange is amending Article IX, Rule 10(b) to provide that if trading on the Exchange is halted during the Primary Trading Session pursuant to Article XX, Rule 10A, and such trading halt is still in effect at the close of the Primary Trading Session, the PPS scheduled for that day will be canceled.[14] Finally, Article XX, Rule 2, Interpretation and Policy .01 is being amended in order to correct an inaccurate internal cross-reference.[15]

The Exchange requests the Commission to find good cause, pursuant to Section 19(b)(2) of the Act, for approving the proposed rule change prior to the thirtieth day after publication in the Federal Register.

III. Commission's Findings and Order Granting Accelerated Approval of Proposed Rule Change

The Commission finds that the CHX's proposal to modify the definition of its Primary Trading Session and to establish a post-primary auction market trading session extending to 3:30 p.m. (CT) is consistent with the requirements of the Act and the rules and regulations thereunder applicable to a national securities exchange, and, in particular, with the requirements of Section 6(b).[16] Specifically, the Commission finds that the proposed rule change is consistent with the Section 6(b)(5) requirements that the rules of an exchange be designed to promote just and equitable principles of trade, and, in general, to protect investors and the public interest.

The Commission believes that the CHX's modification of the definition of its Primary Trading Session to track the hours that each security is traded on its primary market is a more flexible

---

and to provide that CHX exclusive issues are eligible for the Post Primary Trading Session. Finally, Amendment No. 2 deletes a provision of proposed Article XX, Rule 37, Interpretation and Policy .05 that would have allowed a specialist to decline to accept, under certain circumstances, orders entered during the Post Primary Trading Session.

[5] The proposed rule change provides that for a security whose primary market is the PSE, the Primary Trading Session for that security shall end no later than 3:00 p.m. (CT). *See* Amendment No. 2, *supra* note 4.

[6] *See* Amendment No. 2, *supra* note 4. The proposal, as originally filed, would have changed the trading hours for securities whose primary market is the CHX to 8:30 a.m.–3:30 p.m. (CT). *See* Securities Exchange Act Release No. 37204 (May 13, 1996), 61 FR 24988 (May 17, 1996).

However, trading in the Chicago Basket, currently conducted on the Floor of the Exchange from 8:30 a.m. to 3:15 p.m. (CT), will be unaffected by the proposed rule change.

[7] The CHX represents that ITS will be available for both inbound and outbound trades during the PPS to the extent that other market centers (*i.e.*, the PSE and the Philadelphia Stock Exchange, Inc. (''Phlx'') are open for trading. The CHX also represents that the PPS will be surveilled in the same manner and using the same techniques as those used to surveil the Primary Trading Session. To facilitate the surveillance of the PPS, CHX's surveillance staff will remain on-site during the PPS and for any necessary additional time period after the close of the PPS. *See* Letter from David T. Rusoff, Attorney, Foley & Lardner, to Ivette Lopez, Assistant Director, Division of Market Regulation, SEC, dated May 9, 1996 (''ITS/Surveillance Letter'').

[8] For purposes of the PPS, the Exchange considers the close of regular trading to occur at 3:00 p.m. (CT) with respect to securities whose primary market is the PSE. Telephone conversation between David T. Rusoff, Attorney, Foley & Lardner, and Jon Kroeper, Attorney, SEC, dated May 31, 1996.

[9] The Exchange will require order tickets of PPS-eligible orders to include an ''E'' designator, which will indicate that the order is eligible for execution during the PPS. *See* ITS/Surveillance Letter, *supra* note 7.

[10] The CHX has represented that it has held a number of meetings with its members in which it has explained the necessary steps members must take in order to make orders eligible for execution during the PPS. The CHX has represented further that it will distribute a Notice to Members that will state, among other things, that PPS orders may not be entered with a specialist prior to 3:00 p.m. (CT) and orders entered during the Primary Trading Session must be replaced after 3:00 p.m. (CT) with order tickets bearing the ''E'' designator in order to be eligible for the PPS. Telephone conversation between David T. Rusoff, Attorney, Foley & Lardner, and Jon Kroeper, Attorney, SEC, dated May 31, 1996.

[11] As part of the proposed rule change, the Exchange has moved existing Interpretation and Policies .01–.03 of Rule 37(a), Article XX, currently found at the end of subparagraph (a) of Rule 37, to the end of Rule 37, and renumbered existing Interpretation and Policy .01 of Rule 37 as Interpretation and Policy .04.

[12] *See* Amendment Nos. 1 and 2, *supra* notes 3 and 4.

Article XX of the CHX Rules contains the Exchange's trading rules. Article XX, Rule 1 currently states that the rules contained in Article XX have general applicability to Exchange Contracts made on the Exchange during the Primary Trading Session, and, to the extent determined by the Exchange, to Exchange Contracts not made on the Exchange. Article XX, Rule 2 currently states that no member or member organization shall make any bid, offer or transaction upon the Floor of the Exchange, issue an ITS commitment from the Floor, or send an order in a Nasdaq National Market Security for execution via telephone to a Nasdaq System market maker other than during the Primary Trading Session, unless pursuant to the ITS Plan.

Article XXI, Rule 1 currently requires each Exchange member to promptly advise the Exchange of each of his or her transactions that are executed on the Floor of the Exchange during the Primary Trading Session or through the Portfolio Trading System.

[13] Therefore, under the proposed rule change, as amended, and the rules of the other national securities exchanges, as of May 31, 1996: the Primary Trading Session will run from 8:30 a.m. to 3:00 p.m. (CT); the PPS will run from 3:00 p.m. to 3:30 p.m. (CT); and the Secondary Trading Session will run from 3:30 p.m. to 5:00 p.m. (CT).

For a description of operation of the Exchange's Secondary Trading Session, see Securities Exchange Act Release No. 33991 (May 2, 1994), 59 FR 23904 (May 9, 1994) (File No. SR–CHX–93–23).

[14] *See* Amendment No. 1, *supra* note 3.

[15] Currently, Interpretation and Policy .01 refers to the Exchange's ITS rules as being located in Article XX, Rule 36, whereas they are actually located in Article XX, Rule 39.

[16] 15 U.S.C. 78f(b).

definition that the existing one in that it can readily accommodate future changes in the trading hours of the other national securities exchanges, without, at present, affecting a substantive change to the existing hours of trading in these securities on the Exchange.

The Commission also believes that the initiation of the PPS does not raise any new regulatory concerns. Currently, auction market trading after 4:00 p.m. (ET) occurs on the Phlx until 4:15 p.m. (ET) and the PSE until 4:50 p.m. (ET).[17] The CHX's PPS will operate in a substantially similar manner and enable the CHX to compete with both the Phlx and PSE for after-hours volume. Specifically, the CHX PPS will continue to provide full transparency by disseminating quotes through the Consolidated Quotation System and reporting trades to the consolidated tape. In addition, although the Exchange's MAX System will be unavailable for automated order routing or executions during the PPS, there will continue to be complete access to the CHX and the usual auction market trading rules of the Exchange will continue to apply.[18] Moreover, in order to preserve the execution quality of market, limit, contingent (including GTX) orders placed on the CHX specialists' books during the Primary Trading Session, such orders will not automatically migrate to the PPS, but rather will do so only if the order is so designated (*i.e.*, with an ''E'' indicator on the ticket) and entered with the specialist after 3:00 p.m. (CT).[19]

Furthermore, the Commission believes that the CHX's proposal to cancel the PPS for a particular day as a result of any trading halt during the Primary Trading Session pursuant to Article XX, Rule 10A that is still in effect at the close of the Primary Trading Session removes from its consideration any regulatory concerns that may have existed if this provision was not present.

The Commission notes, however, that the only other national securities exchanges that will be operating an auction market after 4:00 p.m. (ET) will be the Phlx and PSE. In this regard, the CHX has represented to the Commission that the ITS will be available between the three exchanges during their post-4:00 p.m. (ET) auction market sessions.[20] Thus, ITS commitments will be able to be routed back and forth, just as during the regular hours of auction trading on the primary markets.

Although the NYSE is operating its Off-Hours Trading facility and the Amex is operating its After-Hours Trading facility during this time period, these sessions are limited to accepting single stock orders priced at either the NYSE or Amex closing price, respectively, or effecting portfolio trades. Because the PPS trading session will not overlap the 5:00 p.m. (ET) executions in Crossing Session I of the NYSE's Off-Hours Trading facility or the Amex's After-Hours Trading Facility, the proposal being approved today does not raise market structure issues regarding the interaction between the PPS and these two after-hours trading facilities.

Accordingly, the Commission does not believe that an extension of auction market trading on the CHX until 4:30 p.m. (ET) will have an adverse effect on the maintenance of fair and orderly markets or disadvantage public customers.

The Commission finds good cause for approving the proposed rule change prior the thirtieth day after the date of publication of notice of filing thereof in the Federal Register. The Commission believes that accelerated approval of the proposal to modify the definition of the Exchange's Primary Trading Session is appropriate because the CHX's proposal does not alter, at present, the existing hours of the Primary Trading Session. Moreover, the Commission will retain the ability to consider the effects of any future change in the hours of the CHX's Primary Trading Session brought about by the modification of another exchange's trading hours through its review under Section 19(b) of the Act of any proposed rule that would precipitate such a change.

The Commission believes that accelerated approval of the proposal to establish a PPS is appropriate because the CHX's proposal is substantively the same as the PPS currently operated by the Phlx, with the exception that the CHX's PPS remains open for an additional fifteen minutes.[21] In this regard, the Commission does not believe that this difference is a significant one, as the same market situation that currently exists between 4:00 to 4:15 (ET) when only the Phlx and PSE are conducting auction market trading will prevail between 4:15 to 4:30 p.m. (ET) when only the CHX and PSE will be conducting such trading.

IV. Solicitation of Comments

Interested persons are invited to submit written data, views and arguments concerning Amendment No. 2. Persons making written submissions should file six copies thereof with the Secretary, Securities and Exchange Commission, 450 Fifth Street, N.W., Washington, D.C. 20549. Copies of the submission, Amendment Nos. 1 and 2, and all written statements with respect to the proposed rule change that are filed with the Commission, and all written communications relating to the proposed rule change between the Commission and any person, other than those that may be withheld from the public in accordance with the provisions of 5 U.S.C. 552, will be available for inspection and copying at the Commission's Public Reference Section, 450 Fifth Street, N.W., Washington, D.C. 20549. Copies of such filing will also be available for inspection and copying at the principal office of the Exchange. All submissions should refer to File No. SR–CHX–96–13 and should be submitted by June 28, 1996.

V. Conclusion

It is therefore ordered, pursuant to Section 19(b)(2) of the Act[22] that the proposed rule change is hereby approved on an accelerated basis.

For the Commission, by the Division of Market Regulation, pursuant to delegated authority.[23]

Jonathan G. Katz,

Secretary.

[FR Doc. 96–14400 Filed 6–6–96; 8:45 am]

BILLING CODE 8010–01–M

[17] *See* Securities Exchange Act Release No. 35188 (January 3, 1995), 60 FR 2422 (January 9, 1995) (SR–Phlx–94–46) (order approving establishment of Phlx PPS from 4:00 to 4:15 (ET)); Securities Exchange Act Release No. 29631 (August 30, 1991), 56 FR 46025 (September 9, 1991) (SR–PSE–91–21) (order approving extension of PSE post-1 p.m. session from 1:30 to 1:50 p.m. (PT)).

[18] The Commission notes that the CHX has represented that trading during the PPS will be surveilled in the same manner and using the same techniques as those used to surveil the Primary Trading Session. *See* ITS/Surveillance Letter, *supra* note 7.

[19] The Commission notes the CHX's representation that it will distribute a Notice to Members setting forth the procedures to be followed to make orders eligible for the PPS. *See supra* note 10.

[20] *See* ITS/Surveillance Letter, *supra* note 7.

[21] The Commission notes that the proposal to establish the Phlx's PPS was noticed previously in the Federal Register for the full statutory period and the Commission did not receive any comments on it. *See supra* note 17.

[22] 15 U.S.C. 78s(b)(2).

[23] 17 CFR 200.30–3(a)(12).

[Release No. 34–37256; File No. SR–DTC–96–08]

Self-Regulatory Organizations; The Depository Trust Company; Notice of Filing of a Proposed Rule Change To Establish a Custody Service For Certain Non-depository Eligible Securities

May 30, 1996.

Pursuant to Section 19(b)(1) of the Securities Exchange Act of 1934

(''Act''),[1] notice is hereby given that on April 2, 1996, The Depository Trust Company (''DTC'') filed with the Securities and Exchange Commission (''Commission'') the proposed rule change (File No. SR–DTC–96–08) as described in Items I, II, and III below, which items have been prepared primarily by DTC. The Commission is publishing this notice to solicit comments on the proposed rule change from interested persons.

I. Self-Regulatory Organization's Statement of the Terms of Substance of the Proposed Rule Change

DTC is filing the proposed rule change to establish procedures for its Custody that will enable DTC participants that hold certain non-depository eligible securities to deposit those securities with DTC for safekeeping and other limited depository services.

II. Self-Regulatory Organization's Statement of the Purpose of, and Statutory Basis for, the Proposed Rule Change

In its filing with the Commission, DTC included statements concerning the purpose of and basis for the proposed rule change and discussed any comments it received on the proposed rule change. The text of these statements may be examined at the places specified in Item IV below. DTC has prepared summaries, set forth in sections (A), (B), and (C) below, of the most significant aspects of such statements.[2]

(A) Self-Regulatory Organization's Statement of the Purpose of, and Statutory Basis for, the Proposed Rule Change

The purpose of the proposed rule change is to establish a method by which the securities industry may centralize the safe-keeping of certificates which are not currently deposited at DTC because either the DTC participant desires that the certificate be held in customer or firm name or the issue is not eligible for full depository services (*e.g.,* securities with certain transfer restrictions). The Custody Service will permit DTC participants to deposit such securities at DTC for safe-keeping and other limited depository services.[3] Certificates deposited through the Custody Service will be held by DTC in customer or firm name and will not be transferred into DTC's nominee name. Therefore, a security issue deposited through the Custody Service (''Custody Issue'') will not be eligible for DTC's book-entry services unless a depositing participant directs DTC to transfer the position originally credited to the participant's custody free account to the participant's general free account.[4]

DTC believes that the Custody Service will provide brokers and dealers with appropriate control over Custody Issues for purposes of Rule 15c3–3(b)[5] under the Act. In accordance with the requirements for the satisfactory control of securities set forth in Rule 15c3–3(c)(5),[6] DTC believes (i) it is a ''bank'' within the meaning of Section 3(a)(6) of the Act because it is a member bank of the Federal Reserve System, (ii) the delivery of Custody Issues to brokers and dealers will not require the payment of money or value, and (iii) the Custody Issues in DTC's custody or control will not be subject to any right, charge, security interest, lien, or claim of any kind in favor of DTC or any person claiming through DTC.

The proposed Custody Service will be implemented in three phases. As each phase is introduced, additional services will be offered to DTC participants. During the first phase, DTC will accept deposits, process withdrawals, and transfer eligible Custody Issues into a participant's general free account. DTC also will respond to inquiries regarding custody deposits and offer automated and physical activity reports to participants.

The second phase of the Custody Service will add redemption and reorganization services. When a custody position becomes the subject of a reorganization or redemption, DTC generally will report the event to its participants using existing services.[7] In addition, DTC participants will be able to utilize DTC's Reorg Deposit Service[8] to present eligible Custody Issues for mandatory reorganizations, full and partial calls, maturities, name changes, reverse splits, mergers, and other similar activities. Participants will be able to submit negotiable and transferable Custody Issues for voluntary reorganizations through existing, modified services. DTC also will collect and distribute the proceeds derived from the presentment of custody deposits.

In the third phase of the Custody Service, DTC will implement the capability to collect and distribute dividend and interest payments for Custody Issues registered in customer or firm name. Although DTC is seeking approval for each phase of the Custody Service, it intends only to implement Phase I at this time, with the other phases to follow in accordance with the experience and needs of DTC participants.

DTC believes the proposed rule change will reduce the costs, inefficiencies, and risks associated with the physical safe-keeping of securities which are not current depository eligible at DTC because its participants will be able to reduce the inventories of securities in their physical vault and in turn should reduce their processing, labor, and insurance expenses. DTC believes the proposed rule change is consistent with the requirements of the Act and the rules and regulations thereunder applicable to DTC in that it promotes efficiencies in the prompt and accurate clearance and settlement of securities transactions. Moreover, DTC believes the proposed service establishes uniform procedures for clearance and settlement which will reduce unnecessary costs and increase the protection of investors and persons facilitating transactions by and acting on behalf of investors. DTC also believes the proposed rule change supports industry efforts to immobilize securities certificates and maximize efficiencies in securities processing.

(B) Self-Regulatory Organization's Statement on Burden on Competition

DTC does not believe that the proposed rule change will impose any burden on competition not necessary or appropriate in furtherance of the purposes of the Act, in the public interest, and for the protection of investors.

[1] 15 U.S.C. § 78s(b)(1) (1988).

[2] The Commission has modified the text of the summaries prepared by DTC.

[3] A description of DTC's proposed Custody Services is set forth in Exhibit B to the filing ''DTC Custody Service,'' which is available for review at the Commission's Public Reference Room.

[4] All necessary documents (*e.g.,* stock powers or endorsements) to effect a legal transfer from customer or firm name to DTC's nominee name must be deposited with DTC prior to or contemporaneously with a participant's instruction to transfer the position from a participant's custody free account to the participant's general free account. Custody Issues eligible for transfer from a participant's custody free account to its general free account are those Custody Issues for which (i) all necessary documents of transfer are on deposit at DTC, (ii) there are no pending restrictions on transferability, and (iii) the issue is otherwise DTC eligible.

[5] 17 CFR 240.15c3–3(b) (1995).

[6] 17 CFR 240.15c3–3(c) (1995).

[7] DTC will require its participants to notify DTC of redemptions and reorganizations involving Custody Issues where DTC has not already announced such an activity.

[8] The Reorg Deposit Service enables DTC participants to deposit at DTC certificates for up to two years after the reorganization activity and to have DTC collect the proceeds on their behalf. For a complete description of DTC's Reorg Deposit Service, refer to Securities Exchange Act Release No. 34189 (June 9, 1994), 59 FR 30818 [SR–DTC–94–06] (notice of filing and immediate effectiveness of proposed rule change).

(C) Self-Regulatory Organization's Statement on Comments on the Proposed Rule Change Received From Members, Participants, or Others

DTC has not solicited comments from its participants on the proposed rule change. A number of DTC participants have requested that DTC develop a custody service and informally have committed to using such a service.

III. Date of Effectiveness of the Proposed Rule Change and Timing for Commission Action

Within thirty-five days of the date of publication of this notice in the Federal Register or within such longer period (i) as the Commission may designate up to ninety days of such date if it finds such longer period to be appropriate and publishes its reasons for so finding or (ii) as to which DTC consents, the Commission will:

(A) by order approve such proposed rule change or

(B) institute proceedings to determine whether the proposed rule change should be disapproved.

IV. Solicitation of Comments

Interested persons are invited to submit written data, views, and arguments concerning the foregoing. Persons making written submissions should file six copies thereof with the Secretary, Securities and Exchange Commission, 450 Fifth Street, N.W., Washington, D.C. 20549. Copies of the submission, all subsequent amendments, all written statements with respect to the proposed rule change that are filed with the Commission, and all written communications relating to the proposed rule change between the Commission and any person, other than those that may be withheld from the public in accordance with the provisions of 5 U.S.C. § 552, will be available for inspection and copying in the Commission's Public Reference Room, 450 Fifth Street, N.W., Washington, D.C. 20549. Copies of such filing will also be available for inspection and copying at the principal office of DTC. All submissions should refer to the file number SR–DTC–96–08 and should be submitted by June 28, 1996.

For the Commission by the Division of Market Regulation, pursuant to delegated authority.[9]

Jonathan G. Katz,

Secretary.

[FR Doc. 96–14357 Filed 6–6–96; 8:45 am]

BILLING CODE 8010–01–M

[9] 17 CFR 200.30–3(a)(12) (1995).

[Release No. 34–37258; File No. SR–OCC–95–17]

Self-Regulatory Organizations; The Options Clearing Corporation; Notice of Filing of a Proposed Rule Change Modifying the Escrow Deposit Program

May 30, 1996.

Pursuant to Section 19(b)(1) of the Securities Exchange Act of 1934 (''Act''),[1] notice is hereby given that on November 2, 1995, The Options Clearing Corporation (''OCC'') filed with the Securities and Exchange Commission (''Commission'') the proposed rule change as described in Items I, II, and III below, which Items have been prepared primarily by OCC. OCC amended the proposed rule change on March 22, 1996.[2] The Commission is publishing this notice to solicit comments on the proposed rule change from interested persons.

I. Self-Regulatory Organization's Statement of the Terms of Substance of the Proposed Rule Change

The purpose of the proposed rule change is to amend OCC's escrow deposit program to permit escrow deposits for stock put contracts and stock index put contracts and to make other conforming changes to OCC's rules.

II. Self-Regulatory Organization's Statement of the Purpose of, and Statutory Basis for, the Proposed Rule Change

In its filing with the Commission, OCC included statements concerning the purpose of and basis for the proposed rule change and discussed any comments it received on the proposed rule change. The text of these statements may be examined at the places specified in Item IV below. OCC has prepared summaries, set forth in sections (A), (B), and (C) below, of the most significant aspects of such statements.[3]

A. Self-Regulatory Organization's Statement of the Purpose of, and Statutory Basis for, the Proposed Rule Change

OCC proposes to modify its escrow deposit program to (i) permit escrow deposits for stock put options and stock index put options; (ii) delete provisions regarding OCC's batch system for processing escrow receipts; (iii) change provisions regarding the timing of the release of escrow deposits; and (iv) delete provisions for bulk deposits for call options and deposits of Treasury bills for put options. In addition, OCC proposes to modify other OCC rules to conform to this rule change.

Pursuant to OCC rules, clearing members may deposit with an OCC approved custodian shares of stock which may be in the form of escrow deposits, underlying certain options in lieu of margin. Escrow deposits are specific deposits of assets held by OCC at an approved custodian for the account of a specific customer. Presently, OCC's rules restrict escrow deposits to short positions in stock calls and stock index calls. For stock call options, the underlying security may be deposited in escrow with an OCC-approved custodian and for stock index call options, any combination of cash, short-term government securities, or marginable equity securities may be deposited in escrow with an OCC-approved custodian.

Permitting escrow deposits with respect to stock put contracts and stock index put contracts had been deferred until sufficient interest existed and an acceptable system could be developed to process escrow deposits for put options. OCC recently received requests to expand its escrow program to include such deposits for stock and stock index puts. Those requests prompted OCC to review its escrow program and its processing systems that support the escrow program. As a result thereof, OCC determined to make several enhancements and modifications to its escrow program as described below.

First, OCC proposes to expand its escrow program to permit escrow deposits for stock put contracts and stock index put contracts and process those deposits through its on-line Escrow Receipt Depository (''ERD'') system.[4] To accomplish the proposed expansion of its escrow program, certain changes to OCC Rules 610 and 1801 are necessary. In general, the changes will accommodate the Deposit of any combination of cash and short-term government securities for put contracts, will provide for the valuation and substitution of deposited assets and, in the event of the value of the property declines below a specified amount, will permit OCC to disregard the escrow

[1] 15 U.S.C. § 78s(b)(1) (1988).

[2] Letter from Jean M. Cawley, OCC, to Jerry W. Carpenter, Assistant Director, Division of Market Regulation, Commission (March 20, 1996).

[3] The Commission has modified the text of the statements prepared by OCC.

[4] For a complete description of the batch ERD system and the transition to the on-line ERD system, refer to Securities Exchange Act Release No. 31595 (December 11, 1992), 57 FR 61139 [SR–OCC–92–30] (order approving on an accelerated basis a proposed rule change relating to the conversion of OCC's current batch ERD system to an on-line system).

deposit and require the clearing member to deposit margin upon notice.

Second, OCC proposes to eliminate its batch ERD system for processing escrow receipts. OCC always contemplated that the on-line ERD system would eventually replace the batch ERD system after a reasonable transition period. OCC believes that clearing members and custodian banks now have completed their transition to the on-line system because the batch ERD system is no longer used. To eliminate the batch ERD system, the proposed changes will eliminate references to escrow receipts in Rule 610 and 1801, and the batch processing system described in Rule 613(a).

Third, OCC proposes to modify the time at which it releases escrow deposits. OCC currently releases an escrow deposit on the second business day following the expiration of the short position covered by the deposit, and thereafter if assigned, collects margin for the position formerly covered by the deposit until the next business day after the exercise settlement date. OCC now proposes to hold an escrow deposit covering a short position to which an exercise has been allocated until the business day after the exercise settlement date and will no longer collect margin.

Fourth, OCC proposes to eliminate bulk deposits of underlying securities for call options and the deposit of Treasury bills for put options because these capabilities have been rarely, if ever, used by clearing members. Furthermore, the provisions for depositing Treasury bills for put options is being superseded by the new provisions for put escrow deposits.

Finally, OCC proposes to modify rules that relate to the suspension and liquidation of a clearing member to conform the rules to the changes to OCC's escrow deposit program described above.

Changes to OCC's Rules

Rule 610

Rule 610 is being amended to permit deposits of cash and/or short-term Government securities (with such securities being valued at the lesser of par value or 100% of current market value) with respect to short positions in put options. The proposal also adds Section 2 to the Interpretations and Policies (''Interpretations'') under Rule 610, which interpretation states that for purposes of Rule 610 the term short-term government securities means securities with a fixed principal amount that are issued or guaranteed by the U.S. and that have one year or less to maturity. As proposed, the total value of the deposited property at the trade date (*i.e.,* the date on which the put covered by the deposit was written) will have to be not less than 105% of the aggregate exercise price (*i.e.,* the exercise price times the number of contracts). This requirement in conjunction with OCC's ability under proposed paragraph (h) to require margin if the value of the deposited property falls below 97.5% of the aggregate exercise price should provide ample protection against adverse market moves. Substitution of deposited property will be permitted provided that the substituted property is at least equal to the value of the property being replaced.

Paragraph (k) is being added to Rule 610 to make explicit OCC's authority to receive from the depository if a clearing member fails to make timely settlement with respect to an assignment (i) in the case of call options, the underlying security or (ii) in the case of put options, an amount in cash (out of the deposited property or its proceeds) equal to the aggregate exercise price plus commissions and other charges.

Rule 610 also is being amended to make various other changes, including changes to make clear that underlying securities may be deposited only with respect to short positions in call options, to eliminate unnecessary provisions of the rule, and to reletter the rule to reflect the deletion and addition of certain paragraphs.[5]

Rule 1801

The proposed changes to OCC rule 1801 are intended to permit escrow deposits with respect to short positions in put index options carried in clearing members' customers' accounts. Currently, such deposits must relate to short positions in call index options carried in customers' accounts. In general, the changes to rule 1801 parallel those being made to Rule 610 to accommodate escrow deposits for put options.

Under amended rule 1801, only cash and short-term government securities will be permitted to be deposited for index put option contracts. A proposed Interpretation to Rule 1801 clarifies that short-term government securities means securities that have a fixed principal amount, that are issued or guaranteed by the U.S., and that have one year or less to maturity. The total value of the deposited property at the trade date (*i.e.,* the date on which the put covered by the deposit was written) cannot be less than the aggregate exercise price per contract. The 5% cushion above the aggregate exercise price that OCC proposes to require for equity put escrow deposits is unnecessary for index put escrow deposits because the settlement amount payable on exercise of an index put is not the gross exercise price but rather is the excess of the exercise price over the closing index value. An escrow deposit with a value equal to 100% of the aggregate exercise price would thus exceed the exercise settlement amount so long as the underlying index value remained above zero. Requiring an escrow deposit with a value equal to 100% of aggregate exercise price in conjunction with OCC's ability under the proposed amendment to rule 1801(e) to require margin if the value of the deposited property falls below 50% of the aggregate exercise price per contract should provide ample protection against adverse market moves. Substitution of deposited property will be permitted provided that the substituted property is at least equal to the value of the property being replaced.

New paragraph (i) is being added to rule 1801 to make explicit OCC's authority to receive from the depository if a clearing member fails to make timely settlement with respect to an assignment an amount in cash (out of the deposited property or its proceeds) equal to the product of the number of contracts covered by the assignment (up to the aggregate number of contracts covered by the escrow deposit) and the exercise settlement amount per contract plus commissions and other charges.

Rule 1801 also is being amended for various other reasons, including to make clear that marginable equity securities may be deposited only with respect to short positions in index call option contracts, to eliminate provisions for hard copy escrow receipts, and to reletter the rule to reflect the addition of new paragraph (i).

[5] Provisions for bulk deposits are being deleted as clearing members have rarely, if ever, made such deposits with OCC. Provisions for hard copy escrow receipts are being deleted as are provisions for hard copy third party pledge depository receipts. However, a newly proposed Interpretation of OCC Rule 610 is intended to permit depositories that currently issue hard copy depository receipts to OCC and that are ''clearing corporations'' as defined in Article 8 of the Uniform Commercial Code to continue to issue such depository receipts to OCC until such time as they develop an EDP System.

The current EDP Pledge System is operated by DTC and allows OCC members who are participants in DTC's participant terminal system (''PTS'') to electronically pledge to OCC securities on deposit at DTC. For a complete description of DTC's EDP Pledge System refer to Securities Exchange Act Release No. 22887 (February 18, 1986), 51 FR 5823 [File No. SR–OCC–86–01] (notice of filing and immediate effectiveness of proposed rule change permitting OCC clearing members to use EDP Pledge System to pledge securities to meet margin and clearing fund obligations).

Rule 613

Rule 613 is being amended to change the time at which an escrow deposit may be released. OCC's current practice is to release all escrow deposits on the second business day following the expiration of the short position covered by the deposit. OCC now proposes to hold an escrow deposit covering a short position to which an exercise has been allocated until the business day after the exercise settlement date and no longer will collect margin. Accordingly, a new provision is being added to Rule 613 that will prohibit the release of an escrow deposit covering a short position for which an exercise notice has been allocated until the first business day after the exercise settlement date (if the exercise is settled through a correspondent clearing corporation) or after OCC receives confirmation of settlement (if the exercise was settled otherwise as directed by OCC).

Rule 613 is being amended further to replace references to ''ERD banks'' with ''Escrow banks'' and to provide for the obligations of an Escrow bank to deliver the aggregate exercise price of the puts covered by an escrow deposit (plus all applicable commissions and charges) upon delivery of a duly executed payment order.

Finally, rule 613 is being amended to delete the references to the batch ERD system for processing escrow receipts and to reletter the rule to reflect the elimination of those provisions.

Rule 612

Rule 612, which permits the deposit of Treasury bills with respect to short positions in put options, is being deleted because clearing members rarely, if ever, use this capability. The alternative of escrow deposits for put options now will be permitted under the changes proposed herein.

Rule 1107

Rule 1107 sets forth the method of settlement of exercised option contracts to which a suspended clearing member is a party and is being amended to reflect the addition of escrow deposits for puts and the deletion of bulk deposits and deposits of Treasury bills for puts. Rule 1107(a)(1) is being amended to include the method of settlement where the suspended clearing member was the assigned clearing member with respect to any exercised option contract and where the exercise notice was allocated by the suspended clearing member (or is allocated by OCC pursuant to provisions of the rule) to a short position for which a specific deposit or an escrow deposit has been made.

Rule 1107(a)(2) is being amended to provide for cases where the custodian of a specific deposit or escrow deposit made for the account of a suspended clearing member fails to perform its obligations to OCC on a timely basis. Rule 1107(a)(2) applies where the customers' account of a suspended clearing member contains pending assignments that are not guaranteed by a stock clearing corporation but are covered by specific or escrow deposits. The rule contemplates that in such a situation that OCC would do the following.

1. In the case of an assigned short call position in stock options, OCC would obtain delivery of the deposited stock from the custodian (against payment of the exercise price in the case of an escrow deposit) and redeliver the stock to the exercising clearing member against payment of the exercise price.

2. In the case of an assigned short put position in stock options, OCC would obtain payment of the exercise price from the custodian (against delivery of the underlying stock in the case of an escrow deposit) and pay the exercise price to the exercising clearing member against delivery of the underlying stock.

3. In the case of an assigned short position in index put or calls, OCC would obtain payment of the exercise settlement amount from the escrow bank and pay it to the exercising clearing member.

However, it is possible that OCC might experience a delay in obtaining delivery or payment from a custodian. Under Rule 1107(a)(2) in its present form, OCC would be obligated to settle with the exercising clearing member in the ordinary course notwithstanding the custodians' failure to perform. In order to do that in the case of a stock option, OCC would have to either buy the underlying stock for delivery to the exercising clearing member (in the case of a call option) or resell the underlying stock on receipt from the exercising clearing member (in the case of a put option). The proposed amendment would give OCC the option of directing the exercising clearing member to buy-in (in the case of a call option) or sell out (in the case of a put option) the underlying stock. OCC would then settle with the exercising clearing member on a net basis pursuant to Rule 1107(a)(6) for the excess of the buy-in cost over the exercise price (in the case of a call option) or the excess of the exercise price over the sell out price (in the case of a put option). Settling on a net basis would relieve OCC of the transaction costs associated with buying or reselling the underlying stock.

Conforming Changes to Rules

The proposed rule change also makes changes to other OCC rules in order to conform those rules to the amendments described above. Rules 305, 601, and 602 are being amended to accommodate escrow deposits for put options and to reflect the deletion of rule 612.

Rule 908 concerning the delivery of underlying securities deposited under rule 610 is being deleted as the requirements of the rule seem impractical in the current three business day settlement environment, especially when an assigned clearing member may not learn of an assignment until T+1.

Rules 1104, and 1106[6] and are being amended to reflect the addition of escrow deposits for puts and the deletion of bulk deposits and deposits of Treasury bills for puts. Subsections (2) and (3) to rule 1106(b) are being amended to eliminate references to hard copy escrow receipts and depository receipts. Rule 1106(b)(2) is being amended to make explicit that OCC will make timely settlement on an exercise assigned to a covered short position of a suspended clearing member even if the depository has not turned over the deposited property to OCC at the time of settlement. OCC will be entitled to reimburse itself for the cost of effecting such settlement from the deposited property when such property is remitted to OCC.

Rules 1301 and 1401 are being amended to reflect the deletion of the provisions relating to bulk deposits and the relettering of rule 610. Rules 1302, 1402, 1502, 1601, 1701, 1808, 1901, 2101, 2301, and 2411 are either being deleted or amended to reflect the deletion of rule 612.

OCC believes the proposed rule change is consistent with Section 17A of Act in that it promotes the prompt and accurate clearance and settlement of securities transactions by enhancing OCC's escrow deposit program.

B. Self-Regulatory Organization's Statement on Burden on Competition

OCC does not believe the proposed rule change will impose any burden on competition.

C. Self-Regulatory Organization's Statement on Comments on the Proposed Rule Change Received From Members, Participants or Others

Written comments were not and are not intended to be solicited with respect

[6] The amendments to Rule 1106 contemplate the prior approval of SR–OCC–95–20. However, if SR–OCC–95–20 is not approved prior to the current filing, OCC has provided an alternative version of the amendments to Rule 1106 to accomplish the desired changes.

to the proposed rule change, and none have been received.

III. Date of Effectiveness of the Proposed Rule Change and Timing for Commission Action

Within thirty-five days of the date of publication of this notice in the Federal Register or within such longer period (i) as the Commission may designate up to ninety days of such date if it finds such longer period to be appropriate and publishes its reasons for so finding or (ii) as to which OCC consents, the Commission will:

(a) by order approve such proposed rule change or

(b) institute proceedings to determine whether the proposed rule change should be disapproved.

IV. Solicitation of Comments

Interested persons are invited to submit written data, views, and arguments concerning the foregoing. Persons making written submissions should file six copies thereof with the Secretary, Securities and Exchange Commission, 450 Fifth Street, N.W., Washington, D.C. 20549. Copies of the submission, all subsequent amendments, all written statement with respect to the proposed rule change that are filed with the Commission, and all written communications relating to the proposed rule change between the Commission and any person, other than those that may be withheld from the public in accordance with the provisions of 5 U.S.C. § 552, will be available for inspection and copying in the Commission's Public Reference Section, 450 Fifth Street, N.W., Washington, D.C. 20549. Copies of such filing also will be available for inspection and copying at the principal office of OCC. All submissions should refer to File No. SR–OCC–95–17 and should be submitted by June 28, 1996.

For the Commission by the Division of Market Regulation, pursuant to delegated authority.[7]

Jonathan G. Katz,

Secretary.

[FR Doc. 96–14358 Filed 6–6–96; 8:45 am]

BILLING CODE 8010–01–M

[7] 17 CFR 200.30–3(a)(12) (1995).

DEPARTMENT OF TRANSPORTATION

Aviation Proceedings; Agreements Filed During the Week Ending May 31, 1996

The following Agreements were filed with the Department of Transportation under the provisions of 49 U.S.C 412 and 414. Answers may be filed within 21 days of date of filing.

Docket Number: OST–96–1407.
Date filed: May 28, 1996.
Parties: Members of the International Air Transport Association.
Subject:
TC3 Telex Mail Vote 804
Japan-South East Asia fares
r–1–076e r–2–081pp
Intended effective date: July 16, 1996

Docket Number: OST–96–1408
Date filed: May 28, 1996
Parties: Members of the International Air Transport Association
Subject:
TC3 Telex Mail Vote 803
Korea-China fare specification
Intended effective date: June 3, 1996

Docket Number: OST–96–1409
Date filed: May 28, 1996
Parties: Members of the International Air Transport Association
Subject:
COMP Telex Mail Vote 805
Fares from Malawi
Intended effective date: July 1, 1996

Docket Number: OST–96–1420
Date filed: May 30, 1996
Parties: Members of the International Air Transport Association
Subject:
TC23 Telex Mail Vote 806
Europe-Japan/Korea Reso 010r
Intended effective date: July 1, 1996

Paulette V. Twine,

Chief, Documentary Services Division.

[FR Doc. 96–14442 Filed 6–6–96; 8:45 am]

BILLING CODE 4910–62–P

Notice of Applications for Certificates of Public Convenience and Necessity and Foreign Air Carrier Permits Filed Under Subpart Q During the Week Ending May 31, 1996

The following Applications for Certificates of Public Convenience and Necessity and Foreign Air Carrier Permits were filed under Subpart Q of the Department of Transportation's Procedural Regulations (See 14 CFR 302.1701 et. seq.). The due date for Answers, Conforming Applications, or Motions to Modify Scope are set forth below for each application. Following the Answer period DOT may process the application by expedited procedures. Such procedures may consist of the adoption of a show-cause order, a tentative order, or in appropriate cases a final order without further proceedings.

Docket Number: OST–96–1423.
Date filed: May 31, 1996.
Due Date for Answers, Conforming Applications, or Motion to Modify Scope: June 28, 1996.
Description: Application of Continental Airlines, Inc., pursuant to 49 U.S.C. Section 41102 and Subpart Q of the Department's Rules of Practice, requests renewal of the authority on Segment 12 of its certificate of public convenience and necessity for Route 29–F authorizing Continental to provide scheduled foreign air transportation of persons, property and mail between New York (Newark) and Madrid and Barcelona via the Azores and Lisbon and beyond to points in Algeria, Tunisia, Egypt, Uganda, Kenya, Tanzania, Turkey, Jordan, Syria, Bahrain, Kuwait, Oman, Qatar, Yemen, United Arab Emirates, Iran, Afghanistan, Pakistan, and India.

Docket Number: OST–96–1426.
Date filed: May 31, 1996.
Due Date for Answers, Conforming Applications, or Motion to Modify Scope: June 28, 1996.
Description: Application of SouthStar Airlines, Inc., pursuant to 49 U.S.C. Section 41102 and Subpart Q of the Regulations, requests a certificate of public convenience and necessity to engage in interstate scheduled air transportation of persons, property and mail.

Paulette V. Twine,

Chief, Documentary Services Division.

[FR Doc. 96–14443 Filed 6–6–96; 8:45 am]

BILLING CODE 4910–62–P

Federal Aviation Administration

RTCA, Inc., Special Committee 182, Minimum Operational Performance Standards (MOPS) for an Avionics Computer Resource (ACR)

Pursuant to section 10(a) (2) of the Federal Advisory Committee Act (P.L. 92–463, 5 U.S.C., Appendix 2), notice is hereby given for Special Committee 182 meeting to be held July 17–19, 1996, starting at 9:00 a.m. The meeting will be held at RTCA, Inc., 1140 Connecticut Avenue, N.W., Suite 1020, Washington, DC, 20036.

The agenda will include: (1) Chairman's Introductory Remarks; (2) Review and Approval of Meeting Agenda; (3) Review and Approval of Minutes from the Previous Meeting; (4) Continue to Develop MOPS Draft Revision 2; (5) Update Glossary; (6) Working Group Report; (7) Other Business; (8) Date and Place of Next Meeting.

Attendance is open to the interested public but limited to space availability. With the approval of the chairman, members of the public may present oral statements at the meeting. Persons wishing to present statements or obtain information should contact the RTCA Secretariat, 1140 Connecticut Avenue, N.W., Suite 1020, Washington, D.C. 20036; (202) 833–9339 (phone) or (202) 833–9434 (fax). Members of the public may present a written statement to the committee at any time.

Issued in Washington, D.C., on June 3, 1996.

Janice L. Peters,

Designated Official.

[FR Doc. 96–14446 Filed 6–6–96; 8:45 am]

BILLING CODE 4810–13–M

RTCA, Inc., Special Committee 169, Aeronautical Data Link Applications

Pursuant to section 10(a)(2) of the Federal Advisory Committee Act (P.L. 92–463, 5 U.S.C., Appendix 2), notice is hereby given for Special Committee 169 meeting to be held June 25–26, 1996, starting at 9:00 a.m. The meeting will be held at RTCA, Inc., 1140 Connecticut Avenue, NW., Suite 1020, Washington, DC, 20036.

The agenda will include: (1) Plenary Administration: Chairman's Introductory Remarks; Review and Approval of Meeting Agenda; Review and Approval of Minutes from the Previous Meeting; Review of Outstanding Action Items; (2) Working Group (WG) Progress: WG–1, Air/Ground Air Traffic Service Applications; WG–2, Systems Architecture/Performance; WG–3, Flight Information Services Applications; WG–4, International Coordination: WG–5, Ground/Ground Traffic Flow Management Applications; WG–6, Human Factors Guidelines; (3) Presentations (None Planned); (4) Document Approvals: DO–219/Change 1; Human Factors Guidelines; (5) Other Business; (6) Plenary Administration Wrap-Up: Work Plan Modifications; Data and Place of Next Meeting.

Attendance is open to the interested public but limited to space availability. With the approval of the chairman, members of the public may present oral statements at the meeting. Persons wishing to present statements or obtain information should contact the RTCA Secretariat, 1140 Connecticut Avenue, NW., Suite 1020, Washington, DC 20036; (202) 833–9339 (phone) or (202) 833–9434 (fax). Members of the public may present a written statement to the committee at any time.

Issued in Washington, DC, on June 3, 1996.

Janice L. Peters,

Designated Official.

[FR Doc. 96–14447 Filed 6–6–96; 8:45 am]

BILLING CODE 4810–13–M

Federal Highway Administration

Environmental Impact Statement; Wake County, NC

AGENCY: Federal Highway Administration (FHWA), Department of Transportation (DOT).

ACTION: Notice of intent.

SUMMARY: The FHWA is issuing this notice to advise the public that an environmental impact statement will be prepared for a proposed highway project in Wake County, North Carolina.

FOR FURTHER INFORMATION CONTACT: Mr. Roy Shelton, Operations Engineer, Federal Highway Administration, 310 New Bern Avenue, Suite 410, Raleigh, North Carolina 27601, Telephone: (919) 856–4350.

SUPPLEMENTARY INFORMATION: The FHWA, in cooperation with the North Carolina Department of Transportation, will prepare an environmental impact statement (EIS) on a proposal to construct the Western Wake Expressway, a multi-lane, controlled access freeway on new location. The proposed action will be a link in the Wake Outer Loop, a circumferential freeway encompassing the City of Raleigh, and the Towns of Cary, Apex, Garner, and Morrisville. The proposed Western Wake Expressway will be located generally west of existing NC 55, tying into the Northern Wake Expressway (now under construction) near SR 1630 at NC 55 and terminating at NC 55 north of SR 1172, south of Apex. The proposed action will be approximately 20.52 kilometers (12.75 miles) in length.

Construction of the proposed freeway is considered necessary to accommodate the existing and projected traffic demand in this rapidly growing portion of Wake County. Also included in the proposal is construction of interchanges at NC 55, US 1, and US 64, as well as an interchange at a forth undetermined location. Alternatives under consideration include: (1) Taking no action; (2) using alternative travel modes; (3) widening existing NC 55 from two-lanes to a multi-lane facility; and, (4) construction of a multi-lane, controlled access facility on new location. Design variations of alignment and grade will be incorporated into the study of each of the build alternatives.

Letters describing the proposed action and soliciting comments will be sent to appropriate Federal, State, and local agencies, and to private organizations and citizens who have previously expressed or are known to have an interest in this proposal. A formal scoping meeting with various Federal, State, and local agencies will be held at 10:00 a.m. on June 17, 1996 at the Transportation Building, 1 South Wilmington Street, Raleigh, North Carolina. Two citizen information workshops will be held in the project area between July, 1996 and April, 1997. In addition, a public hearing will be held. Public notice will be given of the time and place of the workshops and hearing. The draft EIS will be available for public and agency review and comment prior to the public hearing.

To ensure that the full range of issues related to this proposed action are addressed and all significant issues are identified, comments and suggestions are invited from all interested parties. Comments or questions concerning this proposed action and the EIS should be directed to the FHWA at the address provided above.

(Catalog of Federal Domestic Assistance Program Number 20.205, Highway Planning and Construction. The regulations implementing Executive Order 12372 regarding intergovernmental consultation on Federal programs and activities apply to this program.)

Issued on: May 29, 1996.

Roy Shelton,

Operations Engineer, Raleigh.

[FR Doc. 96–14339 Filed 6–6–96; 8:45 am]

BILLING CODE 4910–22–M

Federal Railroad Administration

[Docket No. RSI–95–1, Notice No. 2]

Regulatory Reinvention; Notice of Railroad Safety Advisory Committee (RSAC) Task Acceptance

AGENCY: Federal Railroad Administration (FRA), Department of Transportation (DOT).

ACTION: Notice of Railroad Safety Advisory Committee Task Acceptance.

SUMMARY: Pursuant to the President's March 4, 1995, directive regarding regulatory reinvention, the Federal Railroad Administration (FRA) conducted an intensive review of its regulations and committed itself to eliminating and reinventing over 95 pages of regulations from the Code of Federal Regulations (CFR) by June 1, 1996. Consistent with the President's initiative on reinventing government, FRA chartered a new Railroad Safety Advisory Committee (RSAC) for consensual rulemaking and deliberation on key railroad safety issues. At the Committee's inaugural meeting on April 1–2, 1996, the RSAC accepted regulatory reinvention of: power brake systems for freight equipment (49 CFR Part 232), the Track Safety Standards

(49 CFR Part 213), and the Radio Standards and Procedures (49 CFR Part 220).

In addition, FRA has decided that the Passenger Equipment Safety Standards and Passenger Train Emergency Preparedness working groups, which currently are addressing the reinvention of 49 CFR Part 223, Safety Glazing Standards, and the steam locomotive standards working group, which currently is addressing the reinvention of 49 CFR Part 230, Steam Locomotive Inspection, should all continue their operation under the aegis of the RSAC.

FOR FURTHER INFORMATION CONTACT: Vicky McCully, FRA, 400 7th Street, S.W., Washington, D.C. 20590 at (202) 366–6569; Lisa Levine, Office of Chief Counsel, FRA, 400 7th Street, S.W., Washington, D.C. 20590 at (202) 366–0621; or Grady C. Cothen, Jr., Deputy Associate Administrator for Safety Standards Program Development, FRA, 400 7th Street, S.W., Washington, D.C. 20590 at (202) 366–0897.

Issued in Washington, D.C. on May 30, 1996.

Donald M. Itzkoff,

Deputy Administrator.

[FR Doc. 96–14260 Filed 6–6–96; 8:45 am]

BILLING CODE 4910–06–P

Surface Transportation Board [1]

[Finance Docket No. 32810]

Douglas M. Head, Kent P. Shoemaker, and Charles H. Clay; Continuance in Control Exemption; Minnesota River Bridge Company

AGENCY: Surface Transportation Board.

ACTION: Notice of Exemption.

SUMMARY: Under 49 U.S.C. 10505, the Board exempts from the prior approval requirements of 49 U.S.C. 11343–45 the continuance in control by Douglas M. Head, Kent P. Shoemaker, and Charles H. Clay of the Minnesota River Bridge Company, subject to standard labor protective conditions.

DATES: This exemption will be effective on July 7, 1996. Petitions to stay must be filed by June 17, 1996. Petitions to reopen must be filed by June 27, 1996.

ADDRESSES: Send pleadings, referring to Finance Docket No. 32810 to: (1) Surface Transportation Board, Office of the Secretary, Case Control Branch, 1201 Constitution Avenue, N.W., Washington, DC 20423; and (2) Jo A. DeRoche, 1350 New York Avenue, N.W., Suite 800, Washington, DC 20005–4797.

FOR FURTHER INFORMATION CONTACT: Beryl Gordon, (202) 927–5660. [TDD for the hearing impaired: (202) 927–5721.]

SUPPLEMENTARY INFORMATION: Additional information is contained in the Board's decision. To purchase a copy of the full decision, write to, call, or pick up in person from: DC NEWS & DATA, INC., 1201 Constitution Avenue, N.W., Room 2229, Washington, DC 20423. Telephone: (202) 289–4357/4359. [Assistance for the hearing impaired is available through TDD services (202) 927–5721.]

Decided: May 23, 1996.

By the Board, Chairman Morgan, Vice Chairman Simmons, and Commissioner Owen.

Vernon A. Williams,

Secretary.

[FR Doc. 96–14414 Filed 6–6–96; 8:45 am]

BILLING CODE 4915–00–P

Surface Transportation Board [1]

[STB Finance Docket No. 32967]

Norfolk and Western Railway Company; Corporate Family Transaction Exemption; the Toledo Belt Railway Company

Norfolk and Western Railway Company (NW), a Class I common carrier by railroad, and the Toledo Belt Railway Company (Toledo), a Class III common carrier railroad, have jointly filed a verified notice of exemption. The exempt transaction is a merger of Toledo with and into NW.[2]

The transaction is expected to be consummated on or after June 1, 1996.

The proposed merger will eliminate Toledo as a separate corporate entity, thereby simplifying the corporate structure of NW and the NW system, and eliminating costs associated with separate recordkeeping, tax, and administrative functions.

This is a transaction within a corporate family of the type specifically exempted from prior review and approval under 49 CFR 1180.2(d)(3). The parties state that the transaction will not result in adverse changes in service levels or significant operational changes. In addition, while the parties do not specifically say it, the transaction would apparently not result in a change in the competitive balance with carriers outside the corporate family.

As a condition to this exemption, any employees adversely affected by the transaction will be protected by the conditions set forth in *New York Dock Ry.—Control—Brooklyn Eastern Dist.*, 360 I.C.C. 60 (1979).

If the verified notice contains false or misleading information, the exemption is void *ab initio*. Petitions to reopen the proceeding to revoke the exemption under 49 U.S.C. 10502(d) may be filed at any time. The filing of a petition to revoke will not automatically stay the transaction.

An original and 10 copies of all pleadings, referring to STB Finance Docket No. 32967, must be filed with the Surface Transportation Board, Office of the Secretary, Case Control Branch, 1201 Constitution Avenue, N.W., Washington, DC 20423. In addition, a copy of each pleading must be served on J. Gary Lane, Norfolk Southern Corporation, Three Commercial Place, Norfolk, VA 23510–2191.

Decided: May 30, 1996.

By the Board, David M. Konschnik, Director, Office of Proceedings.

Vernon A. Williams,

Secretary.

[FR Doc. 96–14417 Filed 6–6–96; 8:45 am]

BILLING CODE 4915–00–P

---

[1] The ICC Termination Act of 1995, Pub. L. No. 104–88, 109 Stat. 803 (the ICCTA), which was enacted on December 29, 1995, and took effect on January 1, 1996, abolished the Interstate Commerce Commission (ICC) and transferred certain functions and proceedings to the Surface Transportation Board (Board). Section 204(b)(1) of the ICCTA provides, in general, that proceedings pending before the ICC on the effective date of that legislation shall be decided under the law in effect prior to January 1, 1996, insofar as they involve functions retained by the ICCTA. This notice relates to a proceeding that was pending with the ICC prior to January 1, 1996, and to functions that are subject to Board jurisdiction pursuant to 49 U.S.C. 11323. Therefore, this notice applies the law in effect prior to the ICCTA, and citations are to the former sections of the statute, unless otherwise indicated.

[1] The ICC Termination Act of 1995, Pub. L. No. 104–88, 109 Stat. 803, which was enacted on December 29, 1995, and took effect on January 1, 1996, abolished the Interstate Commerce Commission and transferred certain functions to the Surface Transportation Board (Board). This notice relates to functions that are subject to Board jurisdiction pursuant to 49 U.S.C. 11323–24.

[2] Toledo is a wholly owned, direct subsidiary of NW with authorized capital stock consisting of 3,000 shares of Common Stock all of which are issued and outstanding and owned by NW. NW or its predecessors have operated the properties of Toledo since the early 1900's. The Agreement and Plan of Merger provides that all shares of Toledo's capital stock will be canceled and retired, and no consideration will be paid in respect of such shares. NW is a direct wholly owned subsidiary of Norfolk Southern Railway Company (NSR), a Class I railroad. NSR is controlled through stock ownership by Norfolk Southern Corporation, a noncarrier holding company.

Surface Transportation Board [1]

[Docket No. AB–167 (Sub-No. 1151X)]

Consolidated Rail Corporation—Abandonment Exemption—in Bergen and Passaic Counties, NJ

AGENCY: Surface Transportation Board.

ACTION: Notice of Exemption.

SUMMARY: The Board exempts from the prior approval requirements of 49 U.S.C. 10903–04 the abandonment by Consolidated Rail Corporation of its 1.8-mile line of railroad known as the Dundee Spur Track, from milepost 0.0 near Garfield to the end of the track at approximately milepost 1.8 near Monroe St., in the city of Passaic, Bergen and Passaic Counties, NJ, subject to public use, historic preservation, and standard labor protective conditions.

DATES: Provided no formal expression of intent to file an offer of financial assistance (OFA) has been received, this exemption will be effective on July 7, 1996. Formal expressions of intent to file an OFA under 49 CFR 1152.27(c)(2) [2] must be filed by June 17, 1996; petitions to stay must be filed by June 24, 1996; and petitions to reopen must be filed by July 2, 1996.

ADDRESSES: Send pleadings referring to Docket No. AB–167 (Sub-No. 1151X) to: (1) Surface Transportation Board, Office of the Secretary, Case Control Branch, 1201 Constitution Avenue, N.W., Washington, DC 20423, and (2) Petitioner's representative: John J. Paylor, 2001 Market St., 16A, Philadelphia, PA 19101–1416.

FOR FURTHER INFORMATION CONTACT: Beryl Gordon, (202) 927–5660. [TDD for the hearing impaired: (202) 927–5721.]

SUPPLEMENTARY INFORMATION: Additional information is contained in the Board's decision. To purchase a copy of the full decision, write to, call, or pick up in person from: DC News & Data, Inc., 1201 Constitution Avenue, N.W., Room 2229, Washington, DC 20423. Telephone: (202) 289–357/4359. [Assistance for the hearing impaired is available through TDD services (202) 927–5721.]

Decided: May 23, 1996.

By the Board, Chairman Morgan, Vice Chairman Simmons, and Commissioner Owen.

Vernon A. Williams,

Secretary.

[FR Doc. 96–14415 Filed 6–6–96; 8:45 am]

BILLING CODE 4915–00–P

[2] *See Exempt. of Rail Abandonment—Offers of Finan. Assist.*, 4 I.C.C.2d 164 (1987).

[1] The ICC Termination Act of 1995, Pub. L. No. 104–88, 109 Stat. 803, which was enacted on

Surface Transportation Board [1]

[STB Docket No. AB–55 (Sub-No. 528X)]

CSX Transportation, Inc.—Abandonment Exemption—in Marion County, IN

CSX Transportation, Inc. (CSXT) filed a notice of exemption under 49 CFR 1152 Subpart F—*Exempt Abandonments* to abandon approximately 1.4 miles of its line of railroad between milepost BD–127.8 at Moorefield and milepost BD–129.2 at Speedway, in Marion County, IN.

CSXT has certified that: (1) No local traffic has moved over the line for at least 2 years; (2) there is no overhead traffic on the line; (3) no formal complaint filed by a user of rail service on the line (or by a state or local government entity acting on behalf of such user) regarding cessation of service over the line either is pending with the Board or with any U.S. District Court or has been decided in favor of complainant within the 2-year period; and (4) the requirements at 49 CFR 1105.7 (environmental reports), 49 CFR 1105.8 (historic reports), 49 CFR 1105.11 (transmittal letter), 49 CFR 1105.12 (newspaper publication), and 49 CFR 1152.50(d)(1) (notice to governmental agencies) have been met.

As a condition to use of this exemption, any employee adversely affected by the abandonment shall be protected under *Oregon Short Line R. Co.—Abandonment—Goshen*, 360 I.C.C. 91 (1979). To address whether this condition adequately protects affected employees, a petition for partial revocation under 49 U.S.C. 10502(d) must be filed.

Provided no formal expression of intent to file an offer of financial assistance (OFA) has been received, this exemption will be effective on July 7, 1996, unless stayed pending reconsideration. Petitions to stay that do not involve environmental issues,[2] formal expressions of intent to file an OFA under 49 CFR 1152.27(c)(2),[3] and trail use/rail banking requests under 49 CFR 1152.29 [4] must be filed by June 17, 1996. Petitions to reopen or requests for public use conditions under 49 CFR 1152.28 must be filed by June 27, 1996, with: Office of the Secretary, Case Control Branch, Surface Transportation Board, 1201 Constitution Avenue, N.W., Washington, DC 20423.

A copy of any petition filed with the Board should be sent to applicant's representative: Charles M. Rosenberger, Senior Counsel, 500 Water Street J150, Jacksonville, FL 32202.

If the verified notice contains false or misleading information, the exemption is void *ab initio*.

CSXT has filed an environmental report which addresses the abandonment's effects, if any, on the environment and historic resources. The Section of Environmental Analysis (SEA) will issue an environmental assessment (EA) by June 12, 1996. Interested persons may obtain a copy of the EA by writing to SEA (Room 3219, Surface Transportation Board, Washington, DC 20423) or by calling Elaine Kaiser, Chief of SEA, at (202) 927–6248. Comments on environmental and historic preservation matters must be filed within 15 days after the EA becomes available to the public.

Environmental, historic preservation, public use, or trail use/rail banking conditions will be imposed, where appropriate, in a subsequent decision.

Decided: June 3, 1996.

By the Board, David M. Konschnik, Director, Office of Proceedings.

Vernon A. Williams,

Secretary.

[FR Doc. 96–14418 Filed 6–6–96; 8:45 am]

BILLING CODE 4915–00–P

[1] The ICC Termination Act of 1995, Pub. L. No. 104–88, 109 Stat. 803, which was enacted on December 29, 1995, and took effect on January 1, 1996, abolished the Interstate Commerce Commission and transferred certain functions to the Surface Transportation Board (Board). This notice relates to functions that are subject to the Board's jurisdiction pursuant to 49 U.S.C. 10903.

[2] The Board will grant a stay if an informed decision on environmental issues (whether raised by a party or by the Board's Section of Environmental Analysis in its independent investigation) cannot be made before the exemption's effective date. *See Exemption of Out-of-Service Rail Lines*, 5 I.C.C.2d 377 (1989). Any request for a stay should be filed as soon as possible so that the Board may take appropriate action before the exemption's effective date.

[3] *See Exempt. of Rail Abandonment—Offers of Finan. Assist.*, 4 I.C.C.2d 164 (1987).

[4] The Board will accept late-filed trail use requests so long as the abandonment has not been consummated and the abandoning railroad is willing to negotiate an agreement.

DEPARTMENT OF THE TREASURY

Customs Service

Quota Status Reports

ACTION: Proposed change in issuance; request for comments.

SUMMARY: As part of its continuing effort to reduce paperwork and respondent burden, Customs invites the general public and other Federal agencies to comment on a change in issuance regarding Quota Status Reports. This request for comment is being made

pursuant to the Paperwork Reduction Act of 1995 (Public Law 104–13; 44 U.S.C. 3505(c)(2)).

DATES: Written comments should be received on or before [July 8, 1996], to be assured of consideration.

ADDRESSES: Direct all written comments to U.S. Customs Service, Quota, Technical Programs, Office of Field Operations, Room 1316, 1301 Constitution Avenue, NW., Washington, D.C. 20229.

FOR FUTHER INFORMATION CONTACT: Requests for additional information or copies of the reports should be directed to U.S. Customs Service, Attn: Karen Cooper, Room 1316, 1301 Constitution Avenue, NW., Washington, D.C. 20229, Telephone (202) 927–5401.

SUPPLEMENTARY INFORMATION: Customs invites the general public and other Federal agencies to comment on a proposal of Customs: (1) To cease publication of the various quota reports in paper format; and (2) to disconnect the telephone lines used only to provide a weekly update on usage of textile quotas for 16 different countries. These quota reports (Textile Status Report, Sugar report, and Commodities Other than Textiles Report) are currently on the Customs Electronic Bulletin Board, available for down- loading, to all with a personal computer, modem and telephone line, free of charge. These reports will also be on the Customs Home Page on the Internet. The comments that are submitted will be summarized and will become a matter of public record.

Dated: June 3, 1996.

Samuel H. Banks,

Assistant Commissioner, Office of Field Operations.

[FR Doc. 96–14419 Filed 6–06–96; 8:45 am]

BILLING CODE 4820–02–P

Internal Revenue Service

Proposed Collection; Comment Request for Regulation CO–111–90

AGENCY: Internal Revenue Service (IRS), Treasury.

ACTION: Notice and request for comments.

SUMMARY: The Department of the Treasury, as part of its continuing effort to reduce paperwork and respondent burden, invites the general public and other Federal agencies to take this opportunity to comment on proposed and/or continuing information collections, as required by the Paperwork Reduction Act of 1995, Public Law 104–13 (44 U.S.C. 3506(c)(2)(A)). Currently, the IRS is soliciting comments concerning an existing final and temporary regulation, CO–111–90 (TD 8515), Revision of Section 338 Consistency Rules. (Regulation §§ 1.338–1, 1.338(b)–1, 1.338(h)(10)–1.)

DATES: Written comments should be received on or before August 6, 1996 to be assured of consideration.

ADDRESSES: Direct all written comments to Garrick R. Shear, Internal Revenue Service, room 5571, 1111 Constitution Avenue NW., Washington, DC 20224.

FOR FURTHER INFORMATION CONTACT: Requests for additional information or copies of the information collection should be directed to Carol Savage, (202) 622–3945, Internal Revenue Service, room 5569, 1111 Constitution Avenue NW., Washington, DC 20224.

SUPPLEMENTARY INFORMATION:

Title: Revision of Section 338 Consistency Rules.

OMB Number: 1545–1295.

Regulation Project Number: CO–111–90 Final and Temporary.

Abstract: Section 338 of the Internal Revenue Code provides rules under which a qualifying stock acquisition is treated as an asset acquisition (a deemed asset acquisition) when an appropriate election is made. The collection of information in this regulation is necessary to make the election, to calculate and collect the appropriate amount of tax liability when a qualifying stock acquisition is made, to determine the persons liable for such tax, and to determine the bases of assets acquired in the deemed asset acquisition.

Current Actions: There is no change to this existing regulation.

Type of Review: Extension of OMB approval.

Affected Public: Business or other for-profit organizations.

Estimated Number of Respondents: 45.

Estimated Time Per Respondent: 34 minutes.

Estimated Total Annual Burden Hours: 25 hours.

REQUEST FOR COMMENTS: Comments submitted in response to this notice will be summarized and/or included in the request for OMB approval. All comments will become a matter of public record. Comments are invited on: (a) Whether the collection of information is necessary for the proper performance of the functions of the agency, including whether the information shall have practical utility; (b) the accuracy of the agency's estimate of the burden of the collection of information; (c) ways to enhance the quality, utility, and clarity of the information to be collected; (d) ways to minimize the burden of the collection of information on respondents, including through the use of automated collection techniques or other forms of information technology; and (e) estimates of capital or start-up costs of operation, maintenance, and purchase of services to provide information.

Approved: June 3, 1996.

Garrick R. Shear,

IRS Reports Clearance Officer.

[FR Doc. 96–14314 Filed 6–6–96; 8:45 am]

BILLING CODE 4830–01–U

UNITED STATES INFORMATION AGENCY

Submission for OMB Review; Comment Request

AGENCY: United States Information Agency.

ACTION: Submission for OMB review; comment request.

SUMMARY: Under the provisions of the Paperwork Reduction Act of 1995 (44 U.S.C. Chapter 35), this notice announces that the following information collection activity has been forwarded to the Office of Management and Budget (OMB) for review and comment. USIA is requesting approval for a revision and three-year extension of an information collection entitled ''Application for Certificate of International Educational Character'', IAP–17, under OMB control number 3116–0007 which expires June 30, 1996. This request for comment is being made pursuant to the Paperwork Reduction Act of 1995 (Public Law 104–13; 44 U.S.C. 3506 (c)(2)(A)).

The information collection activity involved with the program is conducted pursuant to the mandate given to the United States Information Agency under the terms and conditions of the multilateral Agreement for Facilitating the International Circulation of Visual and Auditory Materials of an Educational, Scientific and Cultural Character, Public Law 89–634.

DATES: Comments are due on or before July 8, 1996.

COPIES: Copies of the Request for Clearance (OMB 83–I), supporting statement, and other documents that have been submitted to OMB for approval may be obtained from the USIA Clearance Officer. Comments should be submitted to the Office of Information and Regulatory Affairs of

OMB, Attention: Desk Officer for USIA, and also to the USIA Clearance Officer.

FOR FURTHER INFORMATION CONTACT: Agency Clearance Officer, Ms. Jeannette Giovetti, United States Information Agency, M/ADD, 301 Fourth Street, S.W., Washington, D.C. 20547, telephone (202) 619–4408, internet address JGiovett@USIA.GOV; and OMB review: Ms. Victoria Wassmer, Office of Information And Regulatory Affairs, Office of Management and Budget, New Executive Office Building, Docket Library, Room 1002, NEOB, Washington, D.C. 20503, Telephone (202) 395–5871.

SUPPLEMENTARY INFORMATION: An Agency may not conduct or sponsor, and a person is not required to respond to a collection of information unless it displays a currently valid OMB control number. The Federal Register Notice with a 60-day comment period soliciting comments on this collection of information was published on April 9, 1996 (vol, 61, no. 69). Public reporting burden for this collection of information (Paper Work Reduction Project: OMB No. 3116–0007) is estimated to average 25 minutes per response. Respondents are required to respond only one time, including the time for reviewing instructions, searching existing data sources, gathering and maintaining the data needed, and completing and reviewing the collection of information. Send comments regarding this burden estimate or any other aspect of this collection of information, including suggestions for reducing the burden, to the United States Information Agency, M/ADD, 301 Fourth Street, S.W., Washington, D.C. 20547; and to the Office of Information and Regulatory Affairs, Office of Management and Budget, New Executive Office Building, Docket Library, Room 10202, NEOB, Washington, D.C. 20503.

Current Actions: This information collection has been submitted to OMB for the purpose of extending the expiration date and announcing the following changes:

(1) The Public Use form for this Information Collection (IAP–17) has undergone two revisions: The microfilm section on the reverse side of the form has been removed as it is no longer required; and the spelling of ''Materials'' has been corrected under the ''Description of Model'' section.

(2) Under the previous submission the ''number of respondents'' was listed as 2000 and the ''total annual burden'' as 834. Under the current proposed submission, the number of respondents is 400 and the total annual burden is 259. The adjustment in the number of annual hours is due to the fact that there has been a decrease in the number of organizations/individuals submitting applications (number of respondents) for certification. This decrease may be the result of the North American Free Trade agreement between the United States, Canada, and Mexico. Canada is the United States' major trading party with respect to audiovisual materials.

Title: ''Application for Certificate of International Educational Character''.

Form Numbers: IAP–17.

Abstract: This information collection is used to certify the international character of visual and auditory materials (motion pictures, videotapes, recordings, sound recordings, filmstrips, slides, maps, charts, posters, models, etc.) for producers and distributors who have an interest in exporting their materials abroad in accordance with the provisions of P.L. 89–634 and E.O. 11311.

Proposed Frequency of Responses:

No. of Respondents .....400.
Recordkeeping Hours .....0.25.
Total Annual Burden .....259.

Dated: June 3, 1996.

Rose Royal,

Federal Register Liaison.

[FR Doc. 96–13612 Filed 6–6–96; 8:45 am]

BILLING CODE 8230–01–M

federal register

Friday
June 7, 1996

Part II

Department of Housing and Urban Development

24 CFR Parts 35, 36 and 37

Requirements Notification, Evaluation, and Reduction of Lead-Based Paint Hazards in Federally Owned Residential Property and Housing Receiving Federal Assistance; Proposed Rule

DEPARTMENT OF HOUSING AND URBAN DEVELOPMENT

Office of the Secretary

24 CFR Parts 35, 36 and 37

[Docket No. FR–3482–P–01]

RIN 2501–AB57

Office of Lead-Based Paint Abatement and Poisoning Prevention; Requirements for Notification, Evaluation and Reduction of Lead-Based Paint Hazards in Federally Owned Residential Property and Housing Receiving Federal Assistance

AGENCY: Office of the Secretary—Office of Lead-Based Paint Abatement and Poisoning Prevention, HUD.

ACTION: Proposed rule.

SUMMARY: This proposed rule implements sections 1012 and 1013 of the Residential Lead-Based Paint Hazard Reduction Act of 1992, Title X of the Housing and Community Development Act of 1992. These sections set forth significant new requirements concerning lead-based paint hazard notification, evaluation, and reduction for federally owned residential property and housing receiving Federal assistance. This proposed rule constitutes a major revision of the Department's lead-based paint regulations. For the first time, HUD's lead-based paint requirements for all Federal programs will be consolidated in the Code of Federal Regulations. One part or subpart will set out programmatic requirements concerning lead-based paint hazard notification, evaluation and reduction for all covered HUD programs, as well as programs of other Federal agencies. One part or subpart will distill information concerning how to perform lead-based paint hazard evaluation and reduction activities, such as risk assessment and interim controls, based on the *HUD Guidelines for the Evaluation and Control of Lead-Based Paint Hazards in Housing.* Another part or subpart will set out requirements concerning lead-based paint notification for all pre-1978 residential property sold or leased, including non-federally related privately owned residential property. (This last part or subpart was published jointly by HUD and the Environmental Protection Agency as a proposed rule, on November 2, 1994; a final rule is expected soon.)

DATES: Comments on this proposed rule must be received on or before September 5, 1996.

The deadline for comments on the information collection requirements is August 6, 1996, although commenters are advised that a comment is best assured of having its full effect if it is received by the Office of Management and Budget (OMB) within 30 days of publication.

ADDRESSES: Interested persons are invited to submit comments regarding this proposed rule to the Rules Docket Clerk, Office of General Counsel, room 10276, Department of Housing and Urban Development, 451 7th Street, SW, Washington, DC 20410–0500. Communications should refer to the above docket number and title. Facsimile (FAX) comments are *not* acceptable. A copy of each communication submitted will be available for public inspection and copying between 7:30 a.m. and 5:30 p.m. weekdays at the above address.

Comments on the proposed information collection requirements must refer to FR–3482, Requirements for Notification, Evaluation and Reduction of Lead-Based Paint Hazards in Federally Owned Residential Property and Housing Receiving Federal Assistance, and must be sent to:

Joseph F. Lackey, Jr., HUD Desk Officer, Office of Management and Budget, New Executive Office Building, Washington, DC 20503

and

Reports Liaison Officer, Office of Lead-Based Paint Abatement and Poisoning Prevention, Department of Housing & Urban Development, 451 7th Street SW., Room 4244, Washington, DC 20410.

FOR FURTHER INFORMATION CONTACT: For further information on part 36 in the proposed rule, contact Joan Catherine Tetrault, and for further information on part 37 of the proposed rule contact Conrad Arnolts. The address for both of these persons is: Office of Lead-Based Paint Abatement and Poisoning Prevention, Department of Housing and Urban Development, 451 7th Street, SW, Room B–133, Washington, DC 20410–0500, Telephone: (202) 755–1805, E-mail: Joan__C.__Tetrault@hud.gov, or Conrad__C.__Arnolts@hud.gov. For legal questions, contact Kenneth A. Markison or John B. Shumway, Office of General Counsel, Room 9262, Department of Housing and Urban Development, Telephone: (202) 708–9988, E-mail: John__B.__Shumway@hud.gov. For hearing- and speech-impaired persons, these numbers may be accessed via TTY (text telephone) by calling the Federal Information Relay Service at 1–800–877–8339.

SUPPLEMENTARY INFORMATION:

I. Paperwork Reduction Act Statement

The information collection requirements contained in sections 36.63, 36.64, 36.70, 36.84, 36.144, 36.162, 36.164, 36.168, 36.170, 36.188, 36.208, 36.230, 36.232, 36.256, 36.274, 36.276, 36.284, 36.294, and 36.302 of this proposed rule have been submitted to the Office of Management and Budget (OMB) for review under the Paperwork Reduction Act of 1995 (44 U.S.C. 3501–3520). An agency may not conduct or sponsor, and a person is not required to respond to, a collection of information unless the collection displays a valid control number.

Information on the estimated public reporting burden and where to send comments is provided under the preamble heading, *Other Matters.* OMB is required to make a decision concerning the collection of information contained in these proposed regulations between 30 and 60 days after publication of this document in the Federal Register. Therefore, a comment to OMB is best assured of having its full effect if OMB receives it within 30 days of publication. This does not affect the deadline for the public to comment on the proposed rule.

II. Background

A. Lead Poisoning

Childhood lead poisoning is ''the most common environmental disease of young children,'' (''Strategic Plan for the Elimination of Lead Poisoning'', Centers for Disease Control (''CDC''), U.S. Department of Health and Human Services, Atlanta, Georgia, 1991) eclipsing all other environmental health hazards found in the residential environment (''The Nature and Extent of Lead Poisoning in Children in the United States: A Report to Congress'', Agency for Toxic Substances and Disease Registry, U.S. Department of Health and Human Services, Atlanta, Georgia, 1988) (hereafter ''ATSDR, 1988''). Lead is highly toxic and affects virtually every system of the body. At high exposure levels, lead poisoning can cause coma, convulsions, and death. While adults can suffer from excessive lead exposures, the groups most at risk are fetuses, infants, and children under age six. At low levels, the neurotoxic effects of lead have the greatest impact on children's developing brains and nervous systems, causing reductions in IQ and attention span, reading and learning disabilities, hyperactivity, and behavioral problems (Davis, J.M., R. Elias and L. Grant ''Current Issues in Human Lead Exposure and Regulation

of Lead'', *Neurotoxicologist,* 14(2–3):1528, 1993). These effects have been identified in many carefully controlled research studies (''Measuring Lead Exposure in Infants, Children and Other Sensitive Populations'', Committee on Measuring Lead in Critical Populations, Board on Environmental Studies and Toxicology, Commission on Life Sciences, National Academy of Sciences, 1993). However, the vast majority of childhood lead-poisoning cases go undiagnosed and untreated, since most poisoned children have no obvious symptoms.

Although significant declines have been observed in the overall mean blood lead levels of children, which can be attributed to Federal Government actions resulting in the removal of lead from gasoline and soldered cans, approximately 1.7 million children are estimated to have blood lead levels high enough to be of a health concern. Lead poisoning affects children across all socioeconomic strata and in all regions of the country. However, because lead-based paint hazards are most severe in older housing in disrepair, the poor in inner cities are disproportionately affected. In some inner city communities, over half of all young children have lead levels exceeding the CDC threshold of concern (10 micrograms per deciliter). Nationwide, African-American children of low and middle income families are twice as likely to be lead poisoned as white children of similar income families (Phase I of the Third National Health and Nutrition Examination Survey, NHANES III, 1988–1992, as reported in the *Journal of American Medical Association,* July 27, 1994).

Today, children in the United States are lead poisoned primarily through ingestion by normal hand-to-mouth activity and, to a lesser extent, inhalation. Because lead is ubiquitous in industrial societies, there are many sources and pathways of lead exposure. The foremost source of childhood lead exposure in the United States today is lead-based paint and the accompanying lead-contaminated dust and soil found in and around older houses (''Preventing Lead Poisoning in Young Children'', CDC, U.S. Department of Health and Human Services, Atlanta, Georgia, 1991; Rabinowitz, M., J. Leviton, H. Needleman, D. Bellinger and C. Waternaux, ''Environmental Correlates of Infant Blood Lead Levels in Boston'', *Environmental Research* 38:96–107, 1985). As early as 1897, lead-based paint was identified as a cause of childhood lead poisoning (Turner, 1897). Many countries prohibited the use of lead in residential paints as far back as 1922 (Rabin, R., ''Warnings Unheeded: A History of Lead Poisoning'', *American Journal of Public Health* 79:1668–1674, 1989). Lead was a major ingredient in most interior and exterior house oil-based paints prior to 1950, with some paints containing as much as 50 percent lead by dry weight. In the early 1950s, other ingredients became more popular, but some lead pigments, corrosion inhibitors, and drying agents were still used.

In the 1950's and 1960's, several large cities in the United States banned the use of lead-based paint (using varying definitions) on interior surfaces in residential structures. In 1955, the paint industry adopted a voluntary standard limiting the use of lead in interior paints to no more than 1 percent by weight of nonvolatile solids. In 1972, HUD prohibited the use of lead-based paint (at the 1 percent standard) in HUD-associated housing. In 1972, the Consumer Product Safety Commission (''CPSC'') reduced the acceptable lead content in residential paint to 0.5 percent, and in 1978 subsequently banned the sale of residential paint containing greater than 0.06 percent lead. CPSC also prohibited the use of such paint in residences and other areas where consumers have direct contact with painted surfaces.

HUD estimates that three-quarters of pre-1980 dwelling units contain some lead-based paint. The likelihood, extent, and concentration of lead-based paint all increase with the age of the building. Fully 90 percent of privately owned dwelling units constructed before 1940 contain some lead-based paint, 80 percent of dwelling units constructed between 1940 and 1959, and 62 percent of dwelling units constructed between 1960 and 1979 (''Comprehensive and Workable Plan for the Abatement of Lead-Based Paint in Privately-Owned Housing: A Report to Congress'', U.S. Department of Housing and Urban Development, Washington, D.C., December 7, 1990). Because the greatest risk is in residential property constructed before 1960, older property generally commands a higher priority for lead hazard controls. However, there is evidence that significant amounts of lead-based paint were sold as late as 1971, when New York City's Health Department tested 78 ''new'' residential paints and found eight of them to have lead ranging from 2.6 percent to 10.8 percent (Bird, D., ''High Lead Paints Listed by City'', NY Times, August 4, 1971:18).

For many years, the conventional belief was that in order to be poisoned children *must* eat lead paint chips. More recent medical research has determined that the most common cause of childhood lead exposure is the ingestion, through hand-to-mouth transmission, of lead-contaminated surface dust (Clark, C.S., R. Bornschein, P. Succop, S. Roda and B. Peace, ''Urban Lead Exposures of Children in Cincinnati, Ohio'', Journal of Chemical Speciation and Bioavailability, 3(¾): 163–171, 1991; Bellinger, D., J. Sloman, A. Leviton, M. Rabinowitz, H. Needleman and C. Waternaux, ''Low Level Lead Exposure and Children's Cognitive Function in the Preschool years'', *Pediatrics*, (87):219–227, 1991). Lead-contaminated dust may be so fine that it cannot be seen by the naked eye. In addition, lead-contaminated dust is difficult to clean up. Leaded dust is generated when lead-based paint is damaged by moisture, abraded on friction and impact surfaces, or is disturbed in the course of repainting, renovation, repair, or abatement. Lead can also be tracked into homes from exterior dust and soil.

Children can also be exposed to lead found in bare soil. High levels of lead in soil around the foundation of a house may come from the scraping and repainting of exterior lead-based paint or simply the deterioration of such paint (Ter Harr, G. and R. Arnow, ''New Information on Lead in Dirt and Dust as Related to the Childhood Lead Problem'', *Environmental Health Prospectives,* May, 1974:83–89; Linton, R.W., D.F.S. Natush, R.L. Solomon and C.A. Evans, ''Physicochemical Characterization of Lead in Urban Dusts: A Microanalytical Technique to Lead Tracing'', *Environmental Science Technology,* 14:159–164, 1980). Soil is also contaminated with lead by the fallout of lead emissions from the combustion of leaded automobile gasoline and from industrial sources (ATSDR, 1988, *supra*). In some areas, high leaded soil levels result from factory and smelter emissions or deteriorating lead-based paint on steel structures, such as bridges. Bare soil that is contaminated with lead poses a hazard to children who play in it.

Based on the belief that children had to eat lead-based paint chips to be poisoned, the typical response to lead poisoning during the 1970s and early 1980s consisted of removing deteriorated and/or accessible lead-based paint by scraping, uncontrolled sanding, or open flame burning, all of which generated large amounts of lead dust. Approaches differed slightly from city to city. Some cities required removal of all lead-based paint to a certain height, such as 5 feet; others required only that deteriorating paint be removed. However, these traditional

abatements had one common characteristic: little attention was paid to controlling, containing and cleaning up leaded dust. In many cases, these paint removal methods actually aggravated the problem, increasing lead exposures and poisoning workers and children in the process. Several studies found that uncontrolled abatement and inadequate cleanup caused increased blood lead levels (Farfel, M. and J.J. Chisolm, Jr, ''Health and Environmental Outcomes of Traditional and Modified Practices for Abatement of Residential Lead-Based Paint'', *American Journal of Public Health,* 80:10,1240–1245, 1990;; Rabinowitz, M., A. Leviton and D. Bellinger, ''Home Refinishing, Lead Paint and Infant Blood Lead Levels'', *American Journal of Public Health*, 75(4):403–404, 1985; Amitai, Y., J.W. Graef, M.J. Brown, R.S. Gerstle, N. Kahn and P.E. Cochrane, ''Hazards of Deleading Homes of Children with Poisoning'', *American Journal of Diseases of Children,* 141:758–760, 1987). The Department's *Lead-Based Paint: Guidelines for Hazard Identification and Abatement in Public and Indian Housing,* (1990) (''Interim Guidelines'') properly emphasized the danger of lead-contaminated dust and the need for worker protection and thorough cleanup.

Title X redefines the concept of ''lead-based paint hazards.'' Under prior Federal legislation, a lead-based paint hazard was defined as any paint greater than or equal to one milligram per square centimeter (mg/cm2) of lead, regardless of its condition or location. Title X states that a lead-based paint hazard is ''any condition that causes *exposure* to lead from lead-contaminated dust, lead-contaminated soil or lead-contaminated paint that is deteriorated or present in accessible surfaces, friction surfaces, or impact surfaces that would result in adverse human health effects.'' Thus, under this definition, intact lead-based paint on most walls and ceilings is not considered a ''hazard,'' although the condition of the paint should be monitored and maintained to ensure that it does not become deteriorated. While most efforts to address lead hazards in residential property will now be aimed at reducing lead-based paint hazards as defined by Title X, Federal law makes one notable exception: in public and Indian housing all lead-based paint and lead-based paint hazards must be abated during modernization.

Title X defines two methods of identifying or ''evaluating'' lead-based paint hazards or lead-based paint. One method, ''risk assessment'', includes wipe sampling and other environmental sampling to identify lead-based paint hazards. The other, ''inspection'' (or ''paint inspection''), determines the presence only of lead-based paint. Lead-based paint hazard evaluation may also be accomplished by a combination of the two methods. The combination approach results in an identification of all lead-based paint *and* lead-based paint hazards. Title X provides for three types of lead-based paint hazard control: interim controls, abatement of lead-based paint hazards, and complete abatement of all lead-based paint. Interim controls are ''measures designed to reduce temporarily human exposure or likely exposure to lead-based paint hazards.'' Abatement means ''a set of measures designed to permanently eliminate lead-based paint hazards'' or lead-based paint. To ensure that lead-based paint hazard evaluation and reduction is carried out safely and effectively, Title X imposes new requirements for consistency and quality control.

B. Legislative and Regulatory History

The existing lead-based paint regulations pertaining to the Department's programs, as well as to all federally owned residential property, were written pursuant to the passage of the Lead-Based Paint Act, as amended prior to 1992. This legislation required the Secretary to ''establish procedures to eliminate as far as practicable the hazards of lead-based paint poisoning with respect to any existing housing which may present such hazards and which is covered by an application for mortgage insurance or housing assistance payments under a program administered by the Secretary.'' HUD interpreted the phrase ''housing assistance payments'' broadly and therefore in 1976 the Department drafted regulations to eliminate the hazards of lead-based paint for virtually all of its programs. Part 35 of the Department's regulations in Title 24 was promulgated setting forth general procedures for the inspection and treatment of defective paint surfaces in all HUD-associated housing. Subsection 35.5(c), however, gave each Assistant Secretary the authority to develop regulations pertaining to their specific areas of responsibility, and varying program regulations concerning lead-based paint now exist throughout Title 24.

The Department's lead-based paint regulations have been amended from time to time in response to changes in the law, court orders and increased knowledge about the hazards and treatment of lead-based paint. The most recent Department-wide regulatory revisions pertaining to lead-based paint were made in 1986, 1987 and 1988. Some additional revisions specific to the public and Indian housing programs were issued in 1991.

On May 12, 1994, at 59 FR 24850, the Department published a proposed rule for comment that was intended to be the first phase of a process to revise HUD's lead-based paint regulations. In this first phase, HUD intended to remedy inaccuracies in existing regulations and respond to advancements in the state of knowledge in the field of lead-based paint testing and hazard reduction. The proposed rule did not reflect changes in the Title X amendment to the Lead-Based Paint Act. However, many of the public comments the Department received on this proposed rule reflected a misimpression that the proposed rule was intended to implement Title X. Other comments were impatient with HUD and felt strongly that the Department should devote its resources to implementing the new legislation, rather then making minor adjustments to the existing regulations. The Department agreed and consequently the May 12, 1994 proposed rule was withdrawn. The proposed changes to the regulations, where consistent with Title X, have been incorporated into this rulemaking.

Title X represents a new and sweeping approach to the problem of lead-based paint poisoning of children, necessitating a comprehensive revision of HUD's lead-based paint regulations. Title X amends what had previously been general language contained in the Lead-Based Paint Act and sets out specific requirements for federally owned residential property and housing receiving Federal assistance. Title X stresses identification of hazards, notification to occupants of the existence of these hazards, and, in many cases, interim control and monitoring of lead-based paint hazards, although abatement of lead-based paint hazards is not precluded. This proposed rule also reflects current knowledge of the causes of lead poisoning and current lead-based paint hazard evaluation and reduction technologies and practices. The presence of lead-based paint will be more accurately identified, with fewer false negatives or false positives. Likewise, the existence, nature, severity and location of lead-based paint hazards (in dust, soil and deteriorated paint) will be more accurately identified and reported. By improving lead-based paint hazard evaluation, decisions about hazard reduction activities will be more fully informed and available resources will be better targeted to reduce

exposure to occupants and to the environment.

III. HUD Reinvention

In 1993 the Department launched a major restructuring, or reinvention, to meet the changing housing and development needs of communities across the country. HUD's reinvention efforts took place in the context of a broader, government-wide reinvention process, the National Performance Review, initiated by President Clinton and Vice-President Gore. The Department's proposed reinvention process will consolidate HUD programs by replacing numerous individual programs, each imposing its own prescriptive rules and requirements, with far fewer streamlined funds, which would stress performance-based objectives. These new funds will give State and local decision makers maximum flexibility to tailor Federal resources in response to local circumstances, needs and priorities. The Department also proposes to phase out direct public housing subsidies to housing agencies, converting the funds to tenant-based rental assistance that will allow residents an expanded choice of housing. Finally, the Department's reinvention will transform the Federal Housing Administration (FHA) into a business-like, government-owned corporation, enabling it to work more effectively and improve its efficiency.

In order to keep pace with the changes HUD is undertaking, the Department's program regulations must also change. Although the proposed lead-based paint rule was developed to implement the statutory requirements of Title X for federally owned residential property and housing receiving Federal assistance, the Department saw this as an opportunity to revise all of its lead-based paint regulations to keep pace with changes in lead-based paint technology and in HUD service delivery.

The proposed rule consolidates numerous lead-based paint regulations found throughout HUD's program regulations into two parts (parts 36 and 37) of title 24 of the Code of Federal Regulations. At the final rule stage, the Department will consider combining all of its lead-based paint regulations into one part of the Code of Federal Regulations.

The Department is seeking to eliminate redundant lead-based paint regulations and to achieve a measure of consistency among the lead-based paint requirements for different HUD programs, recognizing that HUD clients often receive funding from several HUD programs and must juggle separate and sometimes inconsistent sets of program regulations. Furthermore, the Department is engaged in a larger effort to streamline and eliminate unnecessary regulations, as part of the reinvention of HUD, and the extent to which this larger effort may impact our objective to eliminate unnecessary lead-based paint regulations is not yet clear. As a result, the Department has not included as part of this proposed rule the specific deletions of lengthy lead-based paint program regulations and new references and cross citations to parts 36 and 37. These deletions, as well as new references and cross citations also will be added during final rulemaking.

The proposed rule groups HUD programs by the type of assistance provided. This was done to ease the burden on HUD clients in locating the lead-based paint requirements that correspond to the type of assistance they receive. For instance, a client receiving HUD funds for rehabilitation will find only one rehabilitation subpart, rather than a rehabilitation subpart for multifamily property and a separate subpart on rehabilitation using HOME or CDBG funds. In addition, grouping HUD programs by type of assistance allows the Department greater flexibility as it consolidates many individual programs into the three performance-based funds. For example, the proposed rule has a subpart for public housing as it now exists and a subpart for tenant-based rental assistance. If a conversion of public housing subsidies to tenant-based rental assistance occurs, the appropriate lead-based paint requirements will already be in place.

Finally, the proposed rule reflects HUD's efforts to balance the practical need for cost-effective, affordable lead-based paint hazard notification, evaluation and reduction measures with the statutory requirements of Title X as well as with HUD's duty to protect children living in a residential property that is owned or assisted by the Federal government from lead-based paint poisoning. Where possible, the proposed rule provides opportunities for HUD clients to implement hazard reduction measures that will best meet the needs of their communities. For example, in subpart B of part 36, States, Indian tribes and insular areas that meet certain eligibility criteria have the opportunity to develop their own lead-based paint procedures and localities located in such a State have the option of adopting these State procedures (*See* Section VII A.3 of the Preamble below).

IV. Public Input on Rulemaking

Consistent with Executive Order 12866, HUD has increased public participation in the regulatory development process. Because of the magnitude of the changes required in HUD's lead-based paint proposed rule and the potential impact of these changes, public involvement was crucial to the rulemaking process. The three main avenues for public involvement in the development of the proposed rule were the HUD Guidelines for the Evaluation and Control of Lead-Based Paint Hazards in Housing (June 1995) (''HUD Guidelines''), the recommendations from the Task Force on Lead-Based Paint Hazard Reduction and Financing, and three major meetings of HUD clients to seek input on the implementation of Title X.

A. HUD Guidelines

The HUD Guidelines were mandated by Section 1017 of Title X. They were developed by housing, public health and environmental professionals with broad experience in lead-based paint hazard identification and control. The HUD Guidelines form the basis for many of the lead-based paint hazard evaluation and reduction methods described in Part 37 of the proposed rule, and are intended to help property owners, government agencies and private contractors sharply reduce children's exposure to lead-based paint, without adding unnecessarily to the cost of housing.

B. Title X Task Force

The creation of the Title X Task Force on Lead-Based Paint Hazard Reduction and Financing was also mandated by Section 1015 of Title X. The Task Force submitted its recommendations, *Putting the Pieces Together: Controlling Lead Hazards in the Nation's Housing,* to HUD Secretary Henry Cisneros and EPA Administrator Carol Browner in July 1995. Members of the Task Force included representatives from Federal agencies, the Federal Home Loan Mortgage Corporation, the Federal National Mortgage Association, the building and construction industry, landlords, tenants, primary lending institutions, private mortgage insurers, single family and multifamily real estate interests, nonprofit housing developers, property liability insurers, public housing agencies, low-income housing advocacy organizations, lead-poisoning prevention advocates and community-based organizations serving communities at high-risk for childhood lead poisoning. The mandate of the Task Force was to address sensitive issues related to lead-based paint hazards in private housing, including standards of hazard evaluation and control, financing hazard control activities, and liability and insurance for rental property

owners and hazard control contractors. The Department used the Task Force recommendations to guide the development of the lead-based paint requirements for Section 8 tenant-based rental assistance programs set forth in Part 36, subpart O, of the proposed rule.

C. Meetings with HUD Clients

Finally, the Department held three meetings with HUD clients on the potential implications of Title X on HUD programs. The meetings involved HUD constituents, grantees, and field staff of the Offices of Public and Indian Housing (PIH), Community Planning and Development (CPD), and Housing, as well as advocacy and tenant representatives. Participants shared their thoughts on several Title X issues including: risk assessment and interim controls, hazard reduction activities during the course of rehabilitation, occupant notice of hazard evaluation and reduction activities, and children with elevated blood-lead levels. Additional written comments were accepted from participants after the meetings. Participants' written comments, as well as meeting transcripts, are available for public review between 7:30 a.m. and 5:30 p.m. weekdays, in the Office of the Rules Docket Clerk, Office of General Council, U.S. Department of Housing and Urban Development, 451 7th Street SW., Washington, DC 20410–0500.

V. Scope and Applicability.

A. Sections 1012 and 1013 of Title X

This proposed rule implements the requirements of the Lead-Based Paint Act, as amended by Section 1012 and Section 1013 of Title X. Section 1012(a) of Title X amends the first sentence of the Lead-Based Paint Act to add the phrase ''or otherwise receives more than $5,000 in project-based assistance under a Federal housing program'' so that 42 U.S.C. 4822(a) now reads as follows:

> The Secretary of Housing and Urban Development * * * shall establish procedures to eliminate as far as practicable the hazards of lead-based paint poisoning with respect to any existing housing which may present such hazards and which is covered by an application for mortgage insurance or housing assistance payments under a program administered by the Secretary or otherwise receives more than $5,000 in project-based assistance under a Federal housing program.

Section 1012 sets out minimum procedures for all ''target housing'' that falls within the three categories discussed above—mortgage insurance, housing assistance payments or more than $5,000 in project-based assistance. Target housing is defined in Title X as housing constructed prior to 1978, except housing for the elderly or persons with disabilities (unless any child who is less than 6 years of age resides or is expected to reside) or any 0-bedroom dwelling unit. HUD has interpreted the exceptions for elderly and disabled housing (*See* § 36.2) to apply only to residential property which is designated exclusively for elderly or disabled use. After considerable discussion, HUD has determined that it would be unworkable and contrary to the intent of the statute to expand these exceptions to each particular dwelling unit occupied by an elderly or disabled person, regardless of its designation.

In the past, the Department has taken the position that the requirements of the Lead-Based Paint Act applied only to new applications for mortgage insurance or other types of housing assistance, under any program administered by the Secretary. The Department interprets the new phrase added by Section 1012(a), ''more than $5,000 in project-based assistance under a Federal housing program'', to cover any Federal housing program administered by any Federal agency which provides project-based assistance. Consequently, subpart I of Part 36 applies to both new and existing inventory receiving project-based assistance under a HUD program, and subpart D applies these requirements to other Federal agencies. Finally, although Title X only requires the Secretary to establish lead-based paint procedures for residential property receiving more than $5,000 in project-based assistance, Subpart I includes additional minimal lead-based paint procedures (i.e. the procedures for tenant-based rental assistance) for multifamily property receiving less than $5,000 in project-based assistance from HUD. The Department also applies these minimal lead-based paint procedures to single family properties receiving Section 8 Moderate Rehabilitation or Project-Based Certificate assistance from HUD. The Department wants to extend some limited lead-based paint protections to properties receiving minimal project-based assistance and also wants to relieve single family owners with limited financial resources from being required to comply with the extensive lead-based paint requirements for project-based assistance. These additional minimal procedures were not included in Subpart D for project-based assistance provided by a Federal agency other than HUD.

Under Title X, Congress is silent with respect to whether the new minimum procedures for lead-based paint hazard notification, evaluation and reduction apply to tenant-based rental assistance and HUD's examination of legislative intent is inconclusive. Congress did not amend the first sentence of the Lead-Based Paint Act, set out above, to delete or amend the phrase ''housing assistance payments.'' HUD has historically interpreted this general phrase to cover virtually all types of housing assistance, including tenant-based rental assistance—*the type of assistance that it seems to cover most obviously*. The legislative history for Title X states, however, that housing receiving tenant-based rental assistance would be exempt from the Lead-Based Paint Act, as amended by Title X. Congress was concerned that, due to the tendency of residential properties to pass in and out of tenant-based Federal assistance programs, it would be unworkable and inequitable to impose greater burdens on owners of such properties than on other private landlords. *See* Senate Committee on Banking, Housing, and Urban Affairs, Senate Report 102–332, July 23, 1992 (hereafter, ''Senate Report 102–332'').

In HUD's view, Congress clearly did not intend for HUD to apply the new minimum procedures for lead-based paint hazard notification, evaluation and reduction set out in Title X to tenant-based rental assistance. However, HUD does not believe that Congress intended to abolish HUD's current procedures, which serve to protect, in a minimal way, the recipients of this type of housing assistance. Rather, Congress may have intended for the Department to effectively retain its present lead-based paint requirements for tenant-based rental assistance. In its current regulations, HUD requires tenant-based rental property occupied by families with children under six to meet the minimal standard for lead-based paint found in its Housing Quality Standards (HQS). In this proposed rule, then, HUD continues to require tenant-based rental property to meet HQS. The Department, however, modifies the lead-based paint requirements in HQS somewhat, in accordance with the general approach of Title X, to require visual evaluation, dust testing in some situations, paint repair, cleanup, a response to an elevated blood level (EBL) child and related activities in accordance with part 37.

Section 1013 amends 42 U.S.C. 4822(a)(3) to modify existing requirements for the disposition (*i.e.* sale) of all residential property constructed before 1978 and owned by a Federal agency. Consequently, the Department includes here new subpart C of Part 36 which sets out these requirements concerning the disposition of all federally owned residential

property. Elsewhere in Part 36, the Department sets out specific requirements for the disposition of HUD-Owned Single Family and Multifamily property.

Section 1013 adds 42 U.S.C. 4822(a)(3)(C), which states the following: In the absence of appropriations sufficient to cover the costs of subparagraphs (A) and (B) (which contain evaluation and abatement requirements for pre-1960 housing, and evaluation and notification requirements for housing constructed between 1960 and 1978), these requirements shall not apply to the affected agency or agencies.

The Department interprets this language to state that HUD (and other Federal agencies that own residential property covered herein) need not comply with the requirements set out in Section 1013 if sufficient funds are not provided to the agency for this purpose. In the Department's view, it is consistent with the intent of Congress to nevertheless make some effort to evaluate and treat deteriorated paint in HUD-owned properties (similar to existing procedures), even if funding is not made available to the Department to carry out more extensive lead-based paint hazard evaluation and reduction. Since these properties are owned by the Department, HUD feels that it has the authority to adopt an alternative response to potential lead-based paint hazards in the absence of sufficient appropriations. Therefore, subparts F and G of part 36, for HUD-Owned Single Family Housing, and subparts J and K of part 36, for HUD-Owned and Mortgagee-in-Possession Multifamily Property, set forth alternative requirements when appropriated money is available and when appropriated money is not available. When appropriated money is available, the regulatory requirements track the language of Section 1013. When appropriated money is not available, alternative regulatory requirements are set forth. Other agencies may also wish to develop alternative requirements to those set out in part 36, subpart C, when appropriated monies are not available.

B. Format

Throughout this proposed rule, lead-based paint hazard notification, evaluation, and reduction requirements represent the minimum activities that are required under this proposed rule; of course, parties may wish to voluntarily undertake more extensive lead-based paint activities. It should also be noted that throughout part 36, paint repair or interim controls of deteriorated paint surfaces are required for various programs and cross references to the relevant subparts of part 37 concerning treatment are included. These subparts of part 37 each include a section describing a de minimis level of paint deterioration, consistent with the HUD Guidelines, below which no action is required. This de minimis level is defined as not more than 10 square feet of deteriorated paint on an exterior wall, not more than 2 square feet on a component with a large surface area other than an exterior wall including, but not limited to, interior walls, ceilings, floors and doors, or not more than 10 percent of the total surface area on an interior or exterior component with a small surface area including, but not limited to, window sills, baseboards and trim.

To avoid requiring evaluation efforts that may have already been undertaken by property owners and to minimize costs, HUD has included exemptions for required evaluation activities if equivalent or more stringent evaluation activities have already been conducted and have indicated the absence of lead-based paint or lead-based paint hazards. The proposed rule also provides opportunities to forego evaluation activities if certain lead-based paint hazard *reduction* measures consistent with the requirements of parts 36 and 37 have been conducted. In addition, where paint inspection or risk assessment are required, the proposed rule provides the option to assume the presence of lead-based paint or lead-based paint hazards or both and to perform hazard reduction activities. Finally, the requirements of visual evaluation, paint repair and cleanup do not apply if a suitable paint inspection has already been completed indicating the absence of lead-based paint (i.e. lead-free).

An owner or recipient of Federal assistance hoping to meet a lead-free exemption may question whether correcting for possible false (or outdated) positive findings during lead-based paint inspections is permissible. The owner or recipient always retains the option of having additional tests performed by certified paint inspectors. Nothing in either the law or the proposed regulation is intended to revoke or restrict that right. An additional test can sometimes clarify whether or not lead-based paint is present. For example, if an owner or recipient believed that a previous inspection had rendered a false positive result (all measurement techniques involve some small degree of sampling and analytical error), the owner or recipient could choose to have a certified paint inspector retest the area in question. If the additional testing by a certified paint inspector indicated that the initial positive results were false (i.e., that there was in fact no lead-based paint present), then the owner or recipient would qualify for a lead-based paint free exemption. Similarly, suppose an owner or recipient first had a test done in 1982 using an X-ray fluorescence (XRF) device that indicated the presence of lead-based paint. Because testing procedures were less reliable at that time (standard practice often failed to consider the effect of the substrate underneath the paint, or the accuracy of the measurement and instrument calibration checks were often deficient), the owner or recipient might choose to conduct a new test using the improved methodology available today. If this second test indicated that lead-based paint was not present, then the owner or recipient would qualify for a lead-based paint free exemption. As a third example, an owner or recipient who had all lead-based paint removed from a property following an earlier inspection could choose to have a new inspection or clearance examination conducted on the abated property. If the new information indicated that lead-based paint was no longer present, then the owner or recipient would qualify for a lead-based paint free exemption. In all three cases, if the second test confirmed the original findings, or if the test was not conducted by a certified paint inspector, an exemption would not be available.

As stated above, the proposed rule sets forth new parts 36 and 37 that, together with part 35, subpart H, comprise all of HUD's regulatory requirements for lead-based paint in a single place. The numerous lead-based paint requirements set out in various program regulations will be deleted. Part 36 describes the lead-based paint requirements for each program covered under the Lead-Based Paint Act, grouped according to the manner in which program responsibility is divided in the Department and according to the relevant requirements. The requirements for single family and multifamily property appear separately. There are two single family property disposition subparts and two multifamily property disposition subparts—one if appropriations are sufficient and one if appropriations are not sufficient. There are also separate subparts for single family insured property and multifamily insured property, and for project- and tenant-based rental assistance programs. There is one rehabilitation subpart and one subpart for CPD non-rehabilitation programs. The requirements for public and Indian housing are located in a

single subpart. There is also a subpart that provides alternative procedures for States receiving Federal housing assistance, or operating a Federal housing assistance program. Finally, the requirements for properties owned by, or receiving project-based assistance from, a Federal agency other than HUD are set out in two subparts.

The program requirements set out in part 36 specifically reference the procedural information for conducting lead-based paint hazard evaluation and reduction activities included in part 37. Part 37 distills the extensive information found in the HUD Guidelines, in subparts on paint inspection, risk assessment, interim controls, abatement, occupant protection, worksite preparation, cleanup, clearance and monitoring. As stated in the discussion of HUD's Reinvention efforts, the Department is considering a more performance-based approach to its lead-based paint hazard evaluation and reduction requirements, and may consolidate parts 36 and 37 in the final rule. The Department requests comments on the format of the proposed rule, as well as the content.

C. Effective Date and Qualifications for Conducting Lead-Based Paint Hazard Evaluation and Reduction Activities

The proposed effective date of these regulations is one year after the date of publication of the final rule in the Federal Register. HUD anticipates that a final lead-based paint rule will be published by September 1996. In determining an appropriate effective date, the Department considered two options: the date of publication of the final rule and 12 months after publication of the final rule.

The argument in favor of an immediate effective date is that Title X (Sections 1012 and 1013) requires the evaluation and reduction of lead-based paint hazards in housing receiving Federal assistance and residential property owned by the Federal government to take effect on January 1, 1995; any further delay in implementing these requirements would pose a risk to the health of children. The argument against an immediate effective date is that program administrators at all levels of government, as well as property owners and contractors performing lead-based paint activities, would not have adequate education and training time to implement the new technical standards, requirements and procedures required under the proposed regulation. The Department is concerned that such a scenario would likely result in a delay in implementing the new lead-based paint requirements, difficulty in locating trained and certified workers, unreliable hazard evaluation results, and unsafe and ineffective hazard control activities.

Further, the Department recognizes that HUD clients conducting ongoing program activities will need time to incorporate, where feasible, the new lead-based paint requirements into their programs. HUD requests program-specific comments on the ''event'' to which the effective date of the rule should be linked with regard to ongoing program activities. Specifically, should HUD programs use (1) the date of the funding agreement between the client and HUD; (2) the date of the expenditure of HUD funds; (3) the date that the contract between the project owner and the funding agency is signed; or is there another more appropriate date?

An effective date of 12 months after publication of the final rule was chosen by the Department as a way to allow all parties—lead-based paint professionals, housing agencies, State and local government agencies, and private property owners—time to prepare for proper implementation of the new lead-based paint requirements. The effective date will also coincide approximately with the conclusion of the two-year period associated with EPA's training and certification requirements, as discussed below. The Department shares the concern of the public health community that further delays in implementing the requirements will place more children at risk of lead-based paint poisoning. However, it seemed impractical for HUD to establish an immediate effective date for the proposed rule, knowing that the infrastructure necessary to carry it out would not be fully in place.

The effective date issue is directly related to the qualifications necessary for persons carrying out lead-based paint hazard evaluation and reduction activities. The proposed rule requires that virtually all lead-based paint hazard evaluation and abatement activities required in part 36 be conducted by individuals and firms that are certified in accordance with the new EPA requirements for lead-based paint activities, developed pursuant to Section 1021 of Title X (adding Sections 402 and 404 of the Toxic Substances Control Act (TSCA). The EPA training and certification regulations were published as a proposed rule on September 2, 1994, and are expected as of this writing to be published as a final rule in 1996. States must have EPA approved training and certification programs in place within two years of publication of the final EPA rule. The EPA regulation will greatly affect the availability of individuals and firms that are trained and certified to conduct lead-based paint activities in each State. If the certification programs of the States and EPA have not developed sufficiently by the time HUD's new lead-based paint rule takes effect, the Department will need to consider temporary qualifications for persons conducting lead-based paint hazard evaluation and reduction activities. The Department requests comments on the certification requirement as well as the effective date.

It should be noted that in part 36, subpart N, public and Indian housing agencies (''HAs'') conducting dust and soil testing for public and Indian housing are not required to be certified in accordance with the new EPA requirements for lead-based paint activities. The Department recognizes that this is inconsistent with the general approach of the proposed rule. However, HAs were required to complete paint inspections by December 6, 1994 and many HAs have already taken the initiative to conduct risk assessments in housing projects. Therefore, in the Department's view, it is illogical to impose new certification requirements for evaluation activities conducted in public and Indian housing. Furthermore, the legislative history for Title X indicates that Congress did not intend for the new procedures set out under Title X to disrupt already ongoing public and Indian housing lead-based paint activities. Since the Department has not applied certification requirements to evaluation activities conducted by HAs, additional descriptive material concerning soil and dust testing has been added to subpart B of part 37. Further, HUD did not extend the certification requirement to dust testing conducted by HAs for the Section 8 tenant-based rental assistance program. However, a risk assessment, conducted in response to an identified EBL child, must be conducted by a certified risk assessor in accordance with 24 CFR part 37. HUD requests public comment on the issue of whether certification requirements for evaluation activities should be applied to HAs.

VI. Definitions

In order to implement Section 1012 and Section 1013 of Title X, certain terms need to be defined. To avoid redundancy, definitions used throughout both parts 36 and 37 are included in subpart A of part 36. Terms that are only used in a particular subpart are defined in that subpart.

Where possible, HUD has drawn definitions directly from Section 1004 of Title X. In cases where the statute either failed to define terms or where the definition was inadequate, the Department has drawn definitions from the HUD Guidelines, existing HUD or EPA regulations (as well as EPA proposed regulations promulgated pursuant to Title X), the National Institute of Building Sciences (''NIBS'') Lead-Based Paint Operations and Maintenance Work Practices Manual, and from definitions compiled and set forth by the American Society for Testing and Materials (ASTM) in a document entitled ''Standard Terminology Relating to Abatement of Hazards from Lead-Based Paint in Buildings and Related Structures''. HUD will accept comments on all definitions not taken directly from the statute.

VII. General Requirements

A. Part 36

1. Cross Cutting Issues

The requirements described below apply, in varying degrees, to HUD programs, as well as to some programs of other Federal agencies, covered under Part 36.

(a) Pamphlet. Section 1012 of Title X amends the Lead-Based Paint Act to add new subparagraph 42 U.S.C. 4822(a)(1)(A), which requires the provision of a lead-based paint hazard information pamphlet (''lead hazard information pamphlet'') to all purchasers and tenants of housing receiving Federal assistance. The lead hazard information pamphlet must be the one developed by EPA pursuant to Section 406 of TSCA (added pursuant to Section 1021 of Title X).

The lead hazard information pamphlet mandated by Section 406 of TSCA contains certain information, such as the health risks associated with exposure to lead, the presence of lead in residential property, approved and recommended methods of evaluation and reduction of lead-based paint hazards, how to obtain a list of certified evaluation and reduction contractors, and an informational statement that State and local governments may impose additional lead-based paint requirements.

Section 1018 of Title X also contains a lead hazard information pamphlet requirement. Under Section 1018, all sellers and landlords of virtually all pre–1978 target housing are required to provide purchasers and tenants with the same lead hazard information pamphlet prior to sale or lease. Since Section 1018 of Title X separately requires *all new purchasers and new tenants of target housing*, including federally owned residential property and housing receiving Federal assistance, to receive the lead hazard information pamphlet, the Department reads ''purchasers and tenants'' in new subparagraph 42 U.S.C. 4822(a)(1)(A) to cover ''*all existing owner-occupants and tenants that were residing in a residential dwelling unit covered by this proposed rule prior to the effective date of the regulation implementing Section 1018 of Title X*,'' since these owner-occupants and tenants would not have received the pamphlet upon initial occupancy. The proposed rule avoids duplicating the requirements set out in Section 1018 by not addressing situations in which the Department, another Federal agency, or a recipient or subrecipient of Federal housing assistance already has a duty as a seller or lessor to provide the pamphlet to new purchasers or tenants. That requirement will be set forth in 24 CFR Part 35, Subpart H.

(b) Notice. New subparagraph 42 U.S.C. 4822(a)(1)(F) of the Lead-Based Paint Act requires the provision of notice to occupants describing the nature and scope of any risk assessment, paint inspection, or reduction activities undertaken. The Department has interpreted this new provision to require the following: (1) Within 15 calendar days of receiving a risk assessment or paint inspection report or both, a written notice must be provided to tenants containing a summary of the nature, scope and results of the evaluation and a contact for more information or access to the actual reports; and (2) within 15 calendar days of completing hazard reduction activities, a notice must be provided to tenants of the actual hazard reduction activities conducted that contains a summary of the nature, scope and results of the hazard reduction activities, a contact for more information, and information on any remaining lead-based paint on a surface-by-surface basis. This notice shall be updated, based on any reevaluation of the dwelling unit or if additional lead-based paint hazard reduction work is conducted. The notices must be posted in a centrally located easily accessible common area or distributed to each occupied dwelling unit, must be of a size and type that are easily read, must be made available in an accessible format for persons with disabilities, to the extent practicable, and if possible must be provided in the tenant's primary language.

The language of 42 U.S.C. 4822(a)(1)(F) does not specifically require that separate notices be provided to tenants, initially after an evaluation has been conducted, and again after hazard reduction activities have been undertaken. However, in the Department's view, withholding information on the results of an evaluation until after hazard reduction activities have been performed and the lead-based paint hazard resolved, poses a serious risk to tenants. The sooner tenants are provided with this information, the better they can protect their children and themselves.

The notification requirements of 42 U.S.C. 4822(a)(1)(F) also do not specify the manner in which the notices must be distributed. The proposed rule provides the option of ''posting the notices in a centrally located, easily accessible common area, or distributing it to each occupied dwelling unit.'' In general, the Department believes that matters of notice format and distribution are best determined by the property owner or other recipient of Federal housing assistance. The Department requests comment on the content, format and distribution of the notices.

(c) Paint Repair. HUD's current lead-based paint regulations often require visual inspection and ''treatment of defective paint surfaces.'' That treatment usually consists of scraping deteriorated paint and in some cases repainting. Paint repair under this proposed rule involves similar visual evaluation and treatment for deteriorated paint surfaces (when the deteriorated paint surface exceeds a de minimis size), but additional safeguards are added. Unless a paint inspection or risk assessment has indicated the absence of lead-based paint, a deteriorated paint surface must be assumed to contain lead. Therefore, when paint repair is conducted, the proposed regulation requires various protections to ensure that the paint is repaired in a manner that does not cause exposure to lead-based paint. The requirements include: (1) The use of protective coverings on the floor or ground; (2) occupant protections that entail restricted access to a worksite until after all paint repair and cleanup have been completed; (3) use of wet methods and other work practices to control leaded dust; (4) surface preparation and cleaning before repainting; and (5) cleanup of the worksite. These additional provisions will help to ensure that lead-based paint hazards are reduced without unintended negative human health or environmental consequences.

The paint repair requirements in this proposed rule often apply where residential properties receive a minimum amount of housing assistance from HUD, and the relationship between

HUD and the recipient of HUD assistance is not continuous. The subparts of part 36 concerning HUD's single family and multifamily insured programs require only paint repair, as well as the subpart concerning HUD-owned properties without sufficient appropriations to carry out the requirements of Section 1013 of Title X. Paint repair is also required by CPD non-rehabilitation programs and the Department's tenant-based rental assistance programs, though these programs have an additional requirement of dust testing for residential properties built before 1950. In addition, HUD has extended the paint repair requirements to residential properties that receive less than $5,000 in HUD funds for rehabilitation, because these rehabilitation activities are limited and the paint disturbance is minimal. Rather than requiring interim controls or abatement activities for this category of rehabilitation, the Department has chosen a ''do no harm'' policy that requires paint repair and cleanup of the surfaces to be disturbed by rehabilitation.

(d) EBLs. The use of children with elevated blood lead levels (EBLs) as a trigger to initiate evaluation or reduction of lead-based paint hazards does not exist in any of the new requirements under Title X. Rather, Congress makes clear that the Department is to focus on preventing the poisoning of children, rather than reacting to children with EBLs (*See* Section 566(a)(1), Housing and Community Development Act of 1987 (''HCD Act of 1987'') (Pub. L. 100–242, enacted February 5, 1988); p. 243, Conference Report for the HCD Act of 1987 (Report 100–426, November 6, 1987); and Title X, Senate Report 102–332). While the Department's primary focus in this rule is on prevention, HUD feels a special duty to children who have already been poisoned by lead-based paint. HUD cannot ignore the possible connection between a child's EBL and the condition of the dwelling unit where the child lives.

Therefore, in each subpart of Part 36 in which HUD maintains a continuing relationship with the recipients of Federal housing assistance, or where an EBL child resides in residential property owned by the Federal government, *additional* requirements are included to evaluate and reduce lead-based paint hazards when an EBL child is identified. Often, the EBL requirements for a particular program are an acceleration of the lead-based paint hazard evaluation and reduction requirements for that program. In some instances, such as in the case of tenant-based rental assistance, the EBL response may be more stringent than the proposed requirements for that program.

In response to the United States General Accounting Office report entitled ''Children in Section 8 Tenant-Based Housing are not Adequately Protected'' (GAO/RCED–94–137, dated May 13, 1994), HUD has also added language to the proposed rule requiring an HA or other individual or organization (e.g. grantee or participating jurisdiction) administering a Section 8 or CPD-funded tenant-based rental assistance program, to the extent practicable, to attempt to obtain the names and addresses of EBL children from local public health agencies on an annual basis. They would then match this information with the names and addresses of families receiving tenant-based rental assistance. The intent of this requirement is not for case-management of an EBL child, but to ensure that families with young children that receive Section 8 tenant-based rental assistance are obtaining housing free of lead-based paint hazards. At the same time, the Centers for Disease Control and Prevention (''CDC'') is urging local public health agencies to provide EBL-related information to HAs. While the Department understands the value of sharing EBL information, we would like to receive public comment concerning two issues: (1) Does this requirement impose an undue administrative burden on the individual or organization administering the tenant-based rental assistance program? (2) Does this requirement adversely impact the privacy rights of families receiving tenant-based rental assistance?

(e) Other Required Practices. Depending on the type of activity conducted and the degree of Federal involvement, the parties that are required to perform lead-based paint hazard evaluation and reduction activities must also perform certain protective activities such as occupant protection, worksite preparation, cleanup, clearance, monitoring, and control of new hazards. With respect to paint repair, specific protective activities are included in subpart D of Part 37. Further, the parties that are required to perform lead-based paint hazard evaluation and reduction activities may be subject to Department of Labor worker protection requirements set out at 29 CFR 1926.62, and EPA waste disposal requirements set out at 40 CFR 260–270. These requirements are not described in Part 37.

2. Subpart A—General Requirements

Subpart A sets out general requirements for all federally owned residential property and housing receiving Federal assistance. This subpart includes a provision concerning the scope of part 36, as well as general exemptions from coverage under part 36. These exemptions include (1) residential property constructed on or after January 1, 1978; (2) single room occupancy (SRO) dwelling units; (3) residential property designated exclusively for the elderly or persons with disabilities, unless a child who is less than six resides or is expected to reside (the Department interprets the phrase, ''a child who is less than six * * * is expected to reside,'' to include any pregnant woman residing in a dwelling unit constructed before 1978 that is covered under this subpart); (4) residential property undergoing emergency repairs in response to a natural disaster; and, (5) residential property required to undergo visual evaluation, paint repair and cleanup for which documentation is provided that a paint inspection has been completed in accordance with part 37 and indicates the absence of lead-based paint on all surfaces. The subpart sets out a general provision for parties required to undertake paint inspection or risk assessment, whereby they may choose to assume the presence of lead-based paint or lead-based paint hazards or both and to conduct hazard reduction activities. There is also a provision allowing for a reasonable delay for evaluation, paint repair, hazard reduction or abatement activities on exterior painted surfaces due to unsuitable weather conditions.

Subpart A also includes provisions concerning the following: a prohibition against the use of paint containing more than 0.06 percent by weight of lead in federally owned residential property and housing receiving Federal assistance; prohibited methods of paint removal; compliance with Federal laws and authorities; compliance with State and local laws, ordinances, codes or regulations governing lead-based paint; a statement that Part 36 is intended to set out the Department's minimum requirements for notification, evaluation and reduction of lead-based paint hazards and that these requirements do not preclude the recipient of Federal assistance from conducting more rigorous activities; Secretarial waivers; and the consequences of noncompliance with the requirements of parts 36 and 37. Terms which are used throughout parts 36 and 37 are defined in this subpart.

3. Subpart B—State Procedures

This subpart allows States, Indian tribes and insular areas that are recipients of Federal housing assistance or that are administering a Federal housing assistance program established by the Secretary, to develop their own alternative lead-based paint procedures to implement Federal requirements for evaluating and reducing lead-based paint and lead-based paint hazards in the following programs: (1) Rehabilitation and (2) Community Planning and Development (CPD) non-rehabilitation. HUD requirements for these programs are set out in subparts L and M of part 36 and in the relevant subparts of part 37. Specifically, subpart B identifies the minimum HUD requirements for each of these programs, but permits States, Indian tribes and insular areas to determine how best to meet these requirements. For instance, Title X requires abatement of lead-based paint hazards in the course of rehabilitation projects receiving more than $25,000 per unit in Federal funds. Under subpart B, an eligible State, Indian tribe or insular area is permitted to establish its own abatement procedures, as long as the clearance standards set out in subpart B are met. This subpart is intended to provide States, Indian tribes and insular areas with latitude in developing lead-based paint hazard reduction measures that are as protective as Federal requirements, but which may be better suited to the specific economic and technological needs of that unit of government.

In order to qualify under this subpart, a State shall have in place a certification program for individuals and firms engaged in lead-based paint activities which has been approved by EPA pursuant to Sections 402 and 404 of TSCA. A State shall also have in place alternative evaluation and hazard reduction procedures that have been approved by the Secretary prior to implementation of the procedures. Further HUD approval is required if the State procedures are substantially modified at any time after implementation. A unit of general local government located in a State that has HUD-approved alternative lead-based paint procedures may also adopt these procedures or choose to follow the applicable provisions of parts 36 and 37.

In developing its own lead-based paint procedures, a State shall adhere to general requirements set out in subpart B concerning the lead-based paint hazard information pamphlet, notice of risk assessment, paint inspection, paint repair and hazard reduction activities, prohibited practices and occupant protection. Specific minimum requirements for each program covered under subpart B and clearance standards for dust and soil tests established by HUD are also set out. These requirements and clearance standards must be incorporated into a State's alternative procedures. In preparing this subpart, the Department received input concerning the possibility of alternative evaluation and reduction procedures for States during meetings with HUD clients (discussed in Paragraph IV C above). HUD requests additional comments concerning this subpart, from State officials in particular, and from the general public.

4. Subpart C—Disposition of Residential Property Owned by a Federal Agency other than HUD

This subpart establishes minimum lead-based paint requirements for residential property built before 1978 that is owned and to be sold by a Federal agency other than HUD, and is consequently subject to the requirements of Section 1013 of Title X. The subpart basically restates the requirements set out in Section 1013, with minimal elaboration. The Department believes that the details of how another Federal agency should carry out the requirements of Section 1013 are best determined by the affected agency. At a minimum, for residential property constructed prior to 1960, the Federal agency shall conduct a paint inspection, risk assessment and abatement of all lead-based paint hazards. Section 1013 does not specifically address when the abatement of hazards must take place and, in HUD's view, abatement may be made a condition of sale with sufficient funds escrowed when a sale is to a non-occupant purchaser.

For residential property constructed after 1959 and before 1978, the Federal agency shall conduct a paint inspection and risk assessment, and the results shall be provided to purchasers as specified under Section 1018 of Title X. Title X gives the Secretary authority to waive the requirements for residential property constructed after 1959 and before 1978 in which a federally or *privately* funded risk assessment performed by a certified risk assessor shows an absence of lead-based paint hazards, or that a paint inspection, performed by a certified paint inspector, shows an absence of lead-based paint. (Although the strict language of Section 1013 states ''federally-funded'' risk assessment or paint inspection, the Department has extended the waiver to privately funded risk assessments or paint inspections, so long as they are performed by a certified risk assessor or paint inspector.) In addition, the Secretary may waive the requirements for residential property constructed after 1959 and before 1978 if a clearance test conducted by a certified risk assessor shows an absence of lead-based paint hazards. If abatement of lead-based paint hazards is performed, additional protective measures must be taken under the general heading of ''other required practices.'' Those practices were discussed in Section VII.A.1(d) of the Preamble above, and are further described in Section VII.B. of the Preamble below.

In the absence of appropriations sufficient to cover the costs of these lead-based paint requirements, the requirements shall not apply. As discussed in Section V.A. of the Preamble, the Department expects a Federal agency to determine whether to establish alternative lead-based paint requirements for its agency if sufficient funds are not appropriated to carry out the requirements of this subpart.

5. Subpart D—Project-Based Assistance Provided by a Federal Agency Other Than HUD

This subpart sets out minimum requirements, consistent with Section 1012, for Federal agencies other than HUD that have housing programs and provide more than $5,000 (per project) of project-based assistance. For the reasons described in Section VII.A.4. above, the subpart basically restates the requirements set out in Section 1012.

Each tenant residing in a dwelling unit prior to the effective date of the regulation implementing Section 1018 of Title X shall receive a lead hazard information pamphlet. Each owner shall provide notices to the tenants of risk assessment and hazard reduction activities conducted in the dwelling unit. Each owner shall also complete a risk assessment in accordance with a schedule determined by the Federal agency, and shall conduct hazard reduction to reduce lead-based paint hazards identified in the risk assessment. In the case of an EBL child residing in a dwelling unit, the owner shall immediately conduct risk assessment and hazard reduction in that unit. The owner shall also comply with the other required practices set forth in this subpart.

It should be noted that the Department is concerned that if interim controls were required under this subpart in accordance with the minimum procedure specified in Title X, owners would not have had the option of conducting abatement

activities if they were recommended in the risk assessment report and receiving a rent adjustment if needed. As a consequence, under this subpart both interim controls and abatement are acceptable responses to lead-based paint hazards.

6. Subpart E—Single Family Insured Property

This subpart sets out the requirements for the Department's single family insured property programs. Manufactured homes and property improvement loan programs under Title I of the National Housing Act are not covered under this regulation, as neither program is the subject of ''an application for mortgage insurance.'' Applications for mortgage insurance in connection with a refinancing transaction are excluded from coverage if an appraisal is not required under the applicable procedures established by HUD. For those mortgage insurance programs that are covered, the extent of Federal involvement is limited and, consequently, the requirements under Title X are also limited.

For a covered refinancing transaction, each occupant residing in a dwelling unit prior to the effective date of the regulation implementing Section 1018 of Title X, shall receive the lead hazard information pamphlet. If an initial application for mortgage insurance is made, the purchaser would receive the lead hazard information pamphlet under the requirements for sale transactions in Section 1018 of Title X.

For single family property that receives HUD mortgage insurance, before the mortgage is endorsed for insurance, the appraiser shall conduct a visual evaluation of painted surfaces to identify deteriorated paint. The appraiser need not be a certified paint inspector or risk assessor because the purpose of the visual evaluation is only to determine the presence of deteriorated paint and visual evaluation does not identify the content of lead in paint. Deteriorated paint surfaces must be repaired and cleanup conducted. With limited exceptions, the commitment or other approval document must contain the requirement that all deteriorated paint surfaces are to be repaired and cleanup conducted before the mortgage is endorsed for insurance. An escrow fund may be established to conduct paint repair and cleanup after endorsement of the mortgage under specific conditions. As stated above, due to the limited relationship between the purchaser and the Federal government, HUD deemed it impracticable to include requirements for an EBL child.

If documentation is provided to the appraiser that a limited paint inspection of specific deteriorated paint surfaces has been completed in accordance with part 37 and indicated the absence of lead-based paint on the particular surfaces, the requirements of this subpart would not apply with respect to those surfaces. Many of the requirements in subpart E are similar to the current lead-based paint requirements for single family insurance programs, except that proper paint repair and cleanup procedures for deteriorated paint are now specified in part 37.

7. Subparts F and G—Disposition of HUD-Owned Single Family Property (With and Without Sufficient Appropriations)

These subparts set out requirements for the disposition (*i.e.* sale) of HUD-owned single family property. The requirements of subpart F would apply in the event the Secretary determines that there are sufficient appropriations to cover the costs of evaluation and reduction of lead-based paint hazards as set out in Section 1013 of Title X. The requirements of subpart G would apply in the event the Secretary determines that there are not sufficient appropriations to cover the costs of evaluation and reduction of lead-based paint hazards as set out in Section 1013 of Title X. *See* the discussion in Section V A. of the Preamble above.

Under subpart F, for single family property constructed prior to 1960, HUD shall conduct a paint inspection and risk assessment, and abate identified lead-based paint hazards before the closing of the sale of the property. Abatement may be made a condition of sale to a non-owner occupant purchaser, with sufficient funds escrowed. A residential property is exempt from the requirements of this subpart if extensive damage requires major rehabilitation or demolition.

For residential property constructed after 1959 and before 1978, HUD shall conduct a paint inspection and risk assessment before the closing of the sale of the property. Results of the paint inspection and risk assessment would be provided to purchasers in accordance with the disclosure requirements of Section 1018. Title X gives the Secretary authority to waive the paint inspection and risk assessment requirements if a federally or *privately* funded risk assessment, performed by a certified risk assessor, shows an absence of lead-based paint hazards; or that a federally or *privately* funded paint inspection, performed by a certified paint inspector, shows an absence of lead-based paint. In addition, the Secretary may waive the requirements for residential property constructed after 1959 and before 1978 if a clearance test conducted by a certified risk assessor shows an absence of lead-based paint hazards. The Department shall also comply with the other required practices set forth in subpart F.

Under subpart G, before the closing of the sale of a residential property, HUD shall conduct a visual evaluation of all paint surfaces to identify deteriorated paint. The Department shall repair deteriorated paint surfaces and perform cleanup of the work area in accordance with Part 37, before the closing of the sale of the property. If the Department retains ownership of a residential property for more than one year, monitoring must be conducted in accordance with subpart J of Part 37 and paint repair and cleanup conducted if necessary, unless a residential property is leased during this period (in which case HUD may make monitoring a condition of the lease). In the case of a sale to a non-occupant purchaser, paint repair and cleanup may be made a condition of sale, with sufficient funds escrowed. HUD may be exempt from the requirements of this subpart for a specific deteriorated paint surface if a limited paint inspection has been completed and shows an absence of lead-based paint on the specific surface. A residential property is also exempt from the requirements of this subpart if extensive damage requires major rehabilitation or demolition. In addition, the Department may be exempt from the repainting requirements described in this subpart if weather conditions make repainting infeasible or if the property is scheduled for major rehabilitation or demolition.

Risk assessments are not specifically required for federally owned residential properties under Section 1013. In fact, Section 1013 contains language requiring inspections for lead-based paint and lead-based paint hazards. However, Title X itself defines ''inspection'' as an investigation for lead-based paint on a surface-by-surface basis, and defines a ''risk assessment'' as an investigation for lead-based paint hazards, which include lead in dust, paint and soil. Since Section 1013 requires actions to be taken to treat lead-based paint hazards, the Department interprets Section 1013 to also require risk assessments of federally owned residential properties in subpart F.

Neither subpart F nor G requires specific action regarding an EBL child. Less than 1 percent of the single family property is occupied when HUD acquires ownership, and, in most cases,

HUD-owned single family property is vacant within three months of the transfer of ownership to HUD. Further, HUD-owned single family properties are generally sold within six months of acquisition. Because of the limited occupancy and relatively high turnover of HUD-owned single family property, the Department thought it impracticable to impose EBL requirements. Existing EBL requirements for single family property owned by the Department have proven to be impractical and difficult to implement.

8. Subpart H—Multifamily Insured Property

This subpart sets out the requirements for the Department's multifamily insured property programs. As with the single family insured property programs, applications for mortgage insurance in connection with a refinancing transaction are excluded from coverage if an appraisal is not required under the applicable procedures established by HUD. Again, because the extent of Federal involvement is limited in multifamily insured property programs, the requirements under Title X are also limited.

For a covered refinancing transaction, each tenant that was residing in a dwelling unit prior to the effective date of the regulation implementing Section 1018 of Title X shall receive the lead hazard information pamphlet. As with the single family insured property program, a new purchaser applying for mortgage insurance would receive the lead hazard information pamphlet under the requirements of Section 1018. Before the issuance of the firm commitment, the Department's or the sponsor's architect shall conduct a visual evaluation of painted surfaces to identify deteriorated paint. The architect need not be a certified paint inspector or risk assessor because the purpose of the visual evaluation is only to determine the presence of deteriorated paint and the visual evaluation does not identify the content of lead in paint. Deteriorated paint surfaces must be repaired and cleanup of the work area conducted. As stated above, due to the limited relationship between the purchaser and the Federal government, HUD deemed it impracticable to include requirements for an EBL child. In cases where multifamily mortgage insurance is combined with another HUD program (*i.e.* project-based assistance), the EBL requirements for that program would apply.

If documentation is provided that a limited paint inspection of specific deteriorated paint surfaces has been completed in accordance with part 37 and indicates the absence of lead-based paint on a specific surface, the requirements of this subpart would not apply with respect to that surface. Many of the requirements in subpart H are similar to the current lead-based paint requirements for multifamily insurance programs, except that proper paint repair and cleanup procedures for deteriorated paint are now specified in part 37.

9. Subpart I—Project-Based Assistance

This subpart sets out the requirements for the Department's project-based rental assistance programs. In this program area, the Department's involvement is ongoing and tied to the residential structure itself; consequently, the lead-based paint hazard evaluation and reduction requirements in Section 1012 are more expansive. Although Title X only requires the Secretary to establish lead-based paint procedures for residential property receiving more than $5,000 in project-based assistance, Subpart I includes additional minimal lead-based paint procedures (i.e. the procedures for tenant-based rental assistance) for multifamily property receiving less than $5,000 in project-based assistance from HUD. The Department also applies these minimum lead-based paint procedures to single family properties receiving Section 8 Moderate Rehabilitation or Project-Based Certificate assistance from HUD. As stated above, the Department wanted to extend some limited lead-based paint protections to properties receiving minimal project-based assistance and also wanted to relieve single family owners with limited financial resources from being required to comply with the extensive lead-based paint requirements for project-based assistance.

Section 1012 of Title X amends the Lead-Based Paint Act to add subparagraph 42 U.S.C. 4822(a)(1)(B), which requires, at a minimum, risk assessments and interim controls in accordance with a schedule determined by the Secretary. Senate Report 102–332, page 117, states that under Title X, ''Risk assessments would be performed in all housing receiving project-based Federal assistance in order to determine the level of risk and notify the residents of existing hazards.'' The Department has decided that the term ''project-based'' should be given its traditional meaning—housing assistance payment programs where the funding is tied to the residential property and not to the tenant (''tenant-based'' housing assistance payments). Further, the requirement for risk assessment only makes sense when it is applied to traditionally ''project-based'' housing assistance payment programs, where HUD maintains an ongoing relationship with the owner and is able to require a phase-in of risk assessment requirements.

The statute, at 42 U.S.C. 4822(a)(1)(B), sets out a schedule in which risk assessments and interim controls must be performed, *i.e.* pre-1960 dwelling units prior to January 1, 1996; 25 percent of 1960–1978 dwelling units by January 1, 1998; not less than 50 percent of 1960–1978 dwelling units by January 1, 2000; and the remainder by January 1, 2002. The Department does not anticipate issuing a final lead-based paint rule in time to meet the January 1, 1996 deadline. Therefore, the Department has delayed the risk assessment schedule, but maintained the same performance intervals (based on the construction date of the residential property) as set out in the statute: residential property constructed before 1960—(proposed to be 2 years after the effective date of this rule); residential property constructed after 1959 and before 1965—by (proposed to be 4 years after the effective date of this rule); residential property constructed after 1964 and before 1971—by (proposed to be 6 years after the effective date of this rule); and residential property constructed after 1970 and before 1978—by (proposed to be 8 years after the effective date of this rule). As stated above, the Department has revised the risk assessment schedule to provide adequate time for education and training in order to implement the new technical standards, requirements and procedures set forth in this proposed rule (*See* Effective Date and Qualifications for Conducting Lead-Based Paint Hazard Evaluation and Reduction Activities). The proposed rule also allows the Secretary to develop an alternative schedule, if necessary. This provision was included to provide the Department with flexibility in working with HUD clients whose housing assistance payment (HAP) contracts are due to expire close to the required date for completing risk assessments. The Department invites comments on the risk assessment schedule for housing programs receiving project-based assistance. Specifically, HUD requests comments on how to address the risk assessment requirements of Title X in residential property where the HAP contracts are due to expire within the next few years.

Under this subpart, each tenant residing in a dwelling unit prior to the effective date of the regulation

implementing Section 1018 of Title X shall receive a lead hazard information pamphlet. Each owner shall provide notices of evaluation, paint repair and hazard reduction activities to tenants. Each owner shall complete a risk assessment prior to execution of the HAP contract. If a risk assessment report identifies lead-based paint hazards, the owner is required to develop a hazard reduction plan (''reduction'' is defined as measures to reduce or eliminate lead-based paint hazards including interim controls or abatement) proposing hazard reduction activities consistent with the recommendations of the risk assessment report, and a schedule for completing hazard reduction activities. The hazard reduction plan will supplement the owner's application for rent increase and shall be submitted to HUD and a copy must be provided to any Contract Administrator or HA in conjunction with the next rent increase request, but no later than 120 calendar days after completion of the risk assessment. HUD will review each plan submitted by an owner and may recommend alternative reduction activities if the activities proposed are too costly. Before approving a hazard reduction plan or recommending alternative activities, the HUD official reviewing the plan shall also conduct a limited environmental review in accordance with 24 CFR part 50. A copy of the Department's determinations must be transmitted to any Contract Administrator or HA. If no rent increase is necessary to implement the plan, the owner shall certify to HUD that the contents of the plan are consistent with Part 37; in this instance, the owner does not have to submit the actual plan to HUD. However, certification must be submitted to the Department and a copy must be provided to any Contract Administrator or HA no later than 120 calendar days after completion of the risk assessment.

It should be noted that the Department is concerned that if interim controls are required under this subpart in accordance with the minimum procedure specified in Title X, owners will not have the option of conducting abatement activities if they were recommended in the risk assessment report and receiving a rent adjustment if needed. As a consequence, under this subpart, both interim controls and abatement are acceptable responses to lead-based paint hazards.

In the event risk assessment and hazard reduction are not completed prior to execution of the HAP contract, a risk assessment must be completed and a hazard reduction plan submitted during the housing assistance payment period. In the latter case, each risk assessment must be completed according to a schedule which places a priority on older dwelling units that are more likely to have lead-based paint. HUD welcomes comments concerning the timing of the implementation of hazard reduction for lead-based paint hazards identified in the risk assessment.

In the case of an EBL residing in a dwelling unit, the owner shall immediately conduct risk assessment and hazard reduction in the dwelling unit, rather than adhere to the established schedule. The owner shall also report the name and address of any known EBL child to the appropriate State or local health agency. When conducting hazard reduction, the owner shall also comply with the other required practices set forth in subpart I.

10. Subparts J and K—Disposition of HUD-Owned and Mortgagee-in-Possession Multifamily Property (With and Without Sufficient Appropriations)

These subparts set out requirements for the disposition (*i.e.* sale) of HUD-owned multifamily property. The requirements of subpart J would apply in the event the Secretary determines that there are sufficient appropriations to cover the costs of evaluation and reduction of lead-based paint hazards as set out in Section 1013 of Title X. The requirements of subpart K would apply in the event the Secretary determines that there are not sufficient appropriations to cover the costs of evaluation and reduction of lead-based paint hazards as set out in Section 1013 of Title X. *See* the discussion in Section V.A. of the Preamble above.

Under subpart J, for multifamily property constructed prior to 1960, HUD shall conduct a paint inspection and risk assessment before publicly advertising the property for sale. Abatement of all identified lead-based paint hazards must be completed no later than conveyance of the title or before a foreclosure sale required by the Secretary. If the disposition program provides for repairs to be performed by the purchaser, abatement may be included in the required repairs. A residential property is exempt from the requirements of this subpart if extensive damage requires major rehabilitation or demolition.

For residential property constructed after 1959 and before 1978, HUD shall conduct a paint inspection and risk assessment before publicly advertising the property for sale. Results of the paint inspection and risk assessment would be provided to purchasers in accordance with the disclosure requirements of Section 1018. Title X gives the Secretary authority to waive the paint inspection and risk assessment requirements if a federally or *privately* funded risk assessment, performed by a certified risk assessor, shows an absence of lead-based paint hazards; or that a federally or *privately* funded paint inspection, performed by a certified paint inspector, shows an absence of lead-based paint. In addition, the Secretary may waive the requirements for residential property constructed after 1959 and before 1978 if a clearance test conducted by a certified risk assessor shows an absence of lead-based paint hazards. The Department shall also comply with the other required practices set forth in subpart J.

Under subpart K, before publicly advertising a residential property for sale, HUD shall conduct a visual evaluation of all paint surfaces to identify deteriorated paint. The Department shall repair deteriorated paint surfaces and perform cleanup of the work area in accordance with Part 37, no later than conveyance of the title by HUD or before a foreclosure sale caused by the Secretary. If the disposition program provides for repairs to be performed by the purchaser, paint repair and cleanup may be included in the required repairs. If the Department retains ownership of a residential property for more than one year, monitoring must be conducted in accordance with subpart J of Part 37 and paint repair and cleanup conducted if necessary. HUD may be exempt from the requirements to repair a specific deteriorated paint surface if a limited paint inspection has been completed and shows an absence of lead-based paint on the specific surface. A residential property is exempt from the requirements of this subpart if extensive damage requires major rehabilitation or demolition.

Again, risk assessments are not specifically required for federally owned residential properties under Section 1013. In fact, Section 1013 contains language requiring inspections for lead-based paint and lead-based paint hazards. However, Title X itself defines ''inspection'' as an investigation for lead-based paint on a surface-by-surface basis, and defines a ''risk assessment'' as an investigation for lead-based paint hazards, which include lead in dust, paint and soil. Since Section 1013 requires actions to be taken to treat lead-based paint hazards, the Department interprets Section 1013 to also require risk assessments of federally owned residential properties in subpart J.

Unlike the requirements for single family property in subparts F and G,

subparts J and K require specific actions regarding an EBL child. As stated above, with respect to single family property, less than 1 percent of the single family property is occupied when HUD acquires ownership and all HUD-owned single family property must be vacant within three months of the transfer of ownership to HUD. This is not the case for multifamily property. Therefore, if a child with an EBL resides in a HUD-owned multifamily dwelling unit, the Department shall immediately conduct risk assessment and interim controls in that unit. The Department shall also report the presence of an EBL child, and any risk assessment or interim controls conducted, to the appropriate State or local health agency.

11. Subpart L—Rehabilitation

This subpart sets out the requirements for the Department's programs which provide assistance for rehabilitation. The majority of this assistance is provided through the Department's CPD programs. Other rehabilitation assistance is provided under the Flexible Subsidy-Capital Improvement Loan Program (CILP) for multifamily property. This subpart does not include other HUD programs that may be tied to rehabilitation activities, but do not provide direct funding of such activities. These include the Department's insurance programs and the Section 8 Moderate Rehabilitation program, which are covered in other subparts of the proposed rule. Public housing modernization programs are not included under this subpart.

Since rehabilitation work typically disturbs a painted surface and, therefore, the result of Federal involvement may be to create or exacerbate a lead-based paint hazard condition, the requirements under Title X for rehabilitation or renovation assistance are the most stringent. Title X requirements for rehabilitation vary based on whether federal rehabilitation assistance is above or below $25,000. The subpart discusses the manner in which rehabilitation costs are calculated for different programs. For purposes of determining whether the rehabilitation cost is under or over $25,000, the Department will look at the hard costs of rehabilitation and not at soft costs, such as administrative fees. Lead-based paint hazard evaluation and cleanup activities will not be considered part of the rehabilitation costs. The Department recognizes that it may be difficult in practice to distinguish between rehabilitation and lead-based paint hazard evaluation and reduction activities and welcomes comments on this issue.

There are three general exemptions in this subpart. Rehabilitation that does not disturb a painted surface is exempt from the requirements of this subpart for the reasons discussed below. Also, if a grantee, participating jurisdiction or CILP recipient certifies to the Department that a dwelling unit undergoing federally funded rehabilitation has been previously abated of all lead-based paint, the requirements of this subpart do not apply. A dwelling unit may also be exempt from the requirement to conduct a limited paint inspection if the grantee, participating jurisdiction or CILP recipient certifies that a paint inspection has been completed and indicates the absence of lead-based paint.

Although many of the requirements under this subpart refer to the grantee or participating jurisdiction, as is the case with many CPD programs, the grantee or participating jurisdiction may require virtually all of these functions to be performed by a subrecipient or other entity administering the financial assistance. A subrecipient can be a public or private nonprofit agency, authority or organization, or a for-profit entity, selected by the grantee or participating jurisdiction to administer all or a portion of the financial assistance. An owner or developer receiving Federal rehabilitation assistance for a residential property is not considered a subrecipient for the purposes of carrying out that project.

All tenants or owner-occupants shall be provided with the lead hazard information pamphlet by the grantee, participating jurisdiction or CILP recipient. In all cases where evaluation, paint repair and hazard reduction activities are undertaken, each grantee, participating jurisdiction or CILP recipient shall post or distribute a notice to tenants of the results of the evaluation. The grantee, participating jurisdiction or CILP recipient shall also post or distribute a notice of the results of the hazard reduction activities.

For housing receiving an average of less than $5,000 per unit in Federal funds for rehabilitation, HUD is requiring the grantee, participating jurisdiction or CILP recipient to conduct a visual evaluation of all painted surfaces to identify deteriorated paint. Before occupancy of a vacant dwelling unit or, where a dwelling unit is occupied, before rehabilitation work begins, the subrecipient or other entity (defined to include an owner) shall repair deteriorated paint surfaces and perform cleanup in accordance with subpart D of part 37. HUD has created this special category for housing receiving less than $5,000 in Federal funds for rehabilitation, for which the evaluation and hazard reduction requirements are more lenient, because the rehabilitation activity is limited and the paint disturbance minimal. Rather than exclude this category from coverage under the proposed rule, the Department chose a ''do no harm'' policy when minimally disturbing a painted surface. This category of housing receiving an average of less than $5,000 per unit in Federal funds for rehabilitation, however, should not be confused with the category of housing established in the statute receiving less than $5,000 in project-based assistance.

For housing receiving an average of $25,000 or less per unit (but greater than $5,000) in Federal funds for rehabilitation, the grantee, participating jurisdiction or CILP recipient is required to conduct a paint inspection of surfaces to be disturbed in the course of the rehabilitation. A paint inspection must be completed before occupancy of a vacant dwelling unit or, where a dwelling unit is occupied, before rehabilitation work begins, in accordance with subpart C of part 37. In addition, each grantee, participating jurisdiction or CILP recipient shall complete a risk assessment in a sample of the federally assisted dwelling units (including common areas and exteriors) in accordance with subpart B of part 37. A risk assessment must be completed before occupancy of a vacant dwelling unit or, where a dwelling unit is occupied, before rehabilitation work begins, and may be done in conjunction with the paint inspection. Hazard reduction activities are required to address any lead-based paint hazards found.

For housing receiving an average of more than $25,000 per unit in Federal funds for rehabilitation, the grantee, participating jurisdiction or CILP recipient is required to conduct a paint inspection of surfaces to be disturbed in the course of the rehabilitation. A paint inspection must be completed before occupancy of a vacant dwelling unit or, where a dwelling unit is occupied, before rehabilitation work begins, in accordance with subpart C of part 37. In addition, each grantee, participating jurisdiction or CILP recipient shall also complete a risk assessment in a sample of the federally assisted dwelling units (including common areas and exteriors) in accordance with subpart B of part 37. A risk assessment must be completed before occupancy of a vacant dwelling unit or, where a dwelling unit is occupied, before rehabilitation work begins, and may be done in conjunction with the paint inspection. Abatement of

lead-based paint hazards identified on a surface to be disturbed by rehabilitation is required. Each grantee, participating jurisdiction or CILP recipient shall conduct hazard reduction activities if lead-based paint hazards are identified in the risk assessment on a surface not to be disturbed by rehabilitation.

Because the relationship between the Department and the grantee, participating jurisdiction or CILP recipient is not ongoing, HUD deemed it impracticable to include requirements for an EBL child. The grantee, participating jurisdiction or CILP recipient, however, shall comply with the other required practices set forth in subpart L.

The Department includes risk assessments as a requirement for rehabilitation programs although risk assessments are not clearly required for rehabilitation activities under Title X. The statute does, however, in new subparagraphs (a)(1)(D) and (E), require reduction or abatement of lead-based paint hazards. Grantees, participating jurisdictions or CILP recipients receiving rehabilitation funds, therefore, are required to perform a risk assessment to determine where lead-based paint hazards exist, so they can then reduce or abate all such hazards.

New subparagraph (a)(1)(C) requires inspection for the presence of lead-based paint prior to federally funded renovation or rehabilitation likely to disturb painted surfaces. HUD has interpreted this language to require inspection of the painted surfaces to be disturbed in the course of federally funded rehabilitation (the term ''rehabilitation'' includes ''renovation''). HUD's interpretation does not require inspection of all painted surfaces in the dwelling unit to be rehabilitated. HUD has attempted to focus paint inspection and abatement efforts on those surfaces where the greatest hazard may be created. This focus seems to be consistent with legislative intent. The Senate Report, cited *supra*, at page 117, specifically states that ''prior to beginning work likely to disturb painted surfaces, owners would be required to have an paint inspection performed to determine the lead content of the paint.''

After the inspection of the painted surfaces to be disturbed is performed, for rehabilitation receiving an average of $25,000 or less (but more than $5,000) per unit, the grantee, participating jurisdiction or CILP recipient is responsible for reduction of any lead-based paint hazards identified in the risk assessment in the entire dwelling unit. HUD has extended the hazard reduction requirement to the entire dwelling unit to correspond with the areas covered in the risk assessment. For rehabilitation receiving an average of $25,000 or more per unit, grantee, participant jurisdiction or CILP recipient is responsible for abating lead-based paint hazards on surfaces to be disturbed by the rehabilitation, and reducing lead-based paint hazards identified in the risk assessment in the rest of the dwelling unit.

12. Subpart M—Community Planning and Development (CPD) Non-Rehabilitation Programs

This subpart sets out the requirements for certain CPD programs which provide Federal funding for acquisition, leasing, tenant-based rental assistance, operating or support services. With the exception of tenant-based rental assistance, since the Federal funding for these programs is often provided by the HUD grantees or participating jurisdictions to the property owner or developer in a single instance and the relationship is not ongoing, the requirements under Title X are limited. For the CPD tenant-based rental assistance program, the requirements of subpart O of Part 36 apply, except for the provision of the lead hazard information pamphlet. Instead, the lead hazard information pamphlet must be distributed in accordance with the requirements set out in subpart M (§ 36.256). Although all the requirements under this subpart refer to the grantee or participating jurisdiction, the grantee or participating jurisdiction may require virtually all of these functions to be performed by the subrecipient administering the financial assistance. A subrecipient can be a public or private nonprofit agency, authority or organization, or a for-profit entity, selected by the grantee or participating jurisdiction to administer all or a portion of the financial assistance. An owner or developer of an assisted residential property is not considered a subrecipient for the purposes of carrying out that project.

All tenants or owner-occupants shall be provided with the lead hazard information pamphlet by the grantee or participating jurisdiction. Before providing financial assistance to an owner, each grantee or participating jurisdiction shall conduct a visual evaluation of all painted surfaces to identify deteriorated paint. For housing constructed before 1950, each grantee or participating jurisdiction shall also conduct dust sampling to determine the presence of lead-contaminated dust. Before occupancy of a vacant dwelling unit or, where a dwelling unit is occupied, immediately after receipt of financial assistance, the grantee or participating jurisdiction shall repair any deteriorated paint surfaces and perform cleanup of the worksite in accordance with part 37. For housing constructed before 1950, if dust sampling identifies lead-contaminated dust, the grantee or participating jurisdiction shall conduct cleanup of the horizontal surfaces in the room, dwelling unit or common areas where lead-contaminated dust is located. The grantee or participating jurisdiction is exempt from the requirement to repair a specific deteriorated paint surface if a limited paint inspection has been completed in accordance with part 37 and indicates an absence of lead-based paint on the specific surface.

As stated above, because the relationship between the HUD grantee or participating jurisdiction and the property owner or developer is not ongoing, HUD deemed it impracticable to include requirements for an EBL child, except in the case of the CPD tenant-based rental assistance programs.

13. Subpart N—Public and Indian Housing Programs

Section 1012 of Title X does not specifically add new requirements to public or Indian housing. The Senate Report, cited *infra*, at page 118, states that Congress did not intend the changes to the Lead-Based Paint Act introduced by Title X to pose a barrier to ongoing efforts by PIH to conduct risk assessments, paint inspections and abatement activities. According to the Report, ''the changes made by Title X to the public housing provision of the LPPPA are intended merely to conform the terminology of Title X's definition of terms.'' Nevertheless, in order to consolidate all of the lead-based paint requirements for HUD in a single place, the Department is including subpart N for public and Indian housing in this rulemaking. This subpart implements the requirements set out in 42 U.S.C. 4822(d)(1) and (3) prior to Title X; where necessary, however, the Department has modified these requirements in order to be consistent with the intent of Title X. Such modifications are noted below in the subpart discussion.

If a tenant has resided in a public or Indian housing unit prior to the effective date of the regulation implementing Section 1018, the HA shall provide the tenant with the new lead hazard information pamphlet. In all cases where lead-based paint or lead-based paint hazard evaluation or reduction activities are undertaken, the HA shall post or distribute a notice to tenants of the results of the evaluation. The HA shall also post or distribute a

notice of the results of the hazard reduction or abatement activities. The notification requirement is intended to respond, in part, to the recommendations made in the 1993 General Accounting Office (GAO) report entitled, *Lead-Based Paint Poisoning: Children in Public Housing Are Not Adequately Protected* (GAO/RCED–93–138).

The Lead-Based Paint Act requires HAs to complete paint inspections by December 6, 1994. The proposed rule adds a supplemental requirement to the regulations for HAs that have not completed paint inspections: any paint inspection not completed by the effective date of this rule must then be immediately conducted in accordance with part 37. If a paint inspection was completed prior to the effective date of this regulation, the Department strongly encourages HAs to conduct quality control activities prescribed by PIH to ensure that paint inspections were conducted properly. PIH set out these quality control procedures in Notice PIH 95–8, issued February 9, 1995.

If a paint inspection has indicated the presence of lead-based paint, each HA shall complete a visual evaluation, dust and soil test, in accordance with part 37, in the housing project before January 1, 1999. If a paint inspection has indicated that no lead-based paint is present, the HA shall complete a soil test (with limited exceptions) in the housing project. A housing project shall be exempt from these requirements if the HA can certify that it has been abated of all lead-based paint and lead-based paint hazards; or that a paint inspection, and a risk assessment conducted in accordance with part 37, was completed prior to January 1, 1999 and identifies the absence of any lead-based paint and lead-based paint hazards in the housing project.

As discussed in Section V.C. of the Preamble above, HAs conducting dust and soil testing for public and Indian housing are not required by this proposed rule to be certified in accordance with the new EPA requirements for lead-based paint activities. However, HAs were required to complete paint inspections by December 6, 1994 and many HAs have already taken the initiative to conduct risk assessments in housing projects; consequently, it seems burdensome to impose new certification requirements for dust and soil testing conducted in public and Indian housing. Since the Department has not applied certification requirements to dust and soil testing conducted by HAs, the individual or firm conducting these activities on behalf of the HA shall be trained in lead hazard evaluation and additional descriptive material concerning soil and dust testing has been added to subpart B of part 37.

As stated in Section II.A. of the Preamble above, most of HUD's lead-based paint requirements will focus on reducing lead-based paint hazards in residential property, pursuant to Title X. The notable exception to this policy continues to be the required abatement of all lead-based paint and lead-based paint hazards in public and Indian housing, as set forth in 42 U.S.C. 4822(d) (1) and (3).

Each HA shall abate all identified lead-based paint and lead-based paint hazards during the course of physical improvements conducted under modernization, or as soon as practical after completing the evaluation requirements set out in this subpart. Each HA shall also conduct interim controls to treat lead-based paint hazards identified in dust and soil testing prior to abatement of these hazards; initial interim controls must be conducted within 30 calendar days of completing the evaluation requirements set out in this subpart. Whenever hazard reduction is conducted, the HA shall comply with the other required practices set forth in § 36.286 of this subpart. A public or Indian housing project shall be exempt from this requirement if the HA can provide documentation to the Department that interim controls are already being conducted in accordance with part 37.

To be consistent with the Title X definition of a lead-based paint hazard, the Department thought it necessary to include the requirement for dust and soil sampling. The Department recognizes that many HAs have taken the initiative to conduct risk assessments in housing projects. The Department does not intend to penalize those HAs at the forefront of lead-based paint hazard control, and provides certain evaluation exemptions to address this situation. Where a lead-based paint hazard is identified and is not being addressed prior to a HA's planned abatement schedule, the proposed rule requires the HA to implement interim controls.

If an EBL child is identified in a public or Indian housing project, the HA shall complete a risk assessment of the dwelling unit in accordance with part 37 within 15 calendar days of notification of the EBL condition, and shall conduct hazard reduction of identified lead-based paint hazards in accordance with part 37 within 15 calendar days of receipt of the risk assessment report. The HA may relocate the family to a post-1978 or previously evaluated dwelling unit that was found to be free of lead-based paint hazards. Because many HAs have completed paint inspection and abatement in their housing projects, the Department has determined that relocation to a dwelling unit free of lead-based paint hazards is a reasonable option to conducting risk assessment and interim controls. In addition, the HA shall report the name and address of the EBL child to the State or local health agency.

The requirements for conducting risk assessment and hazard reduction activities when an EBL child is identified and reporting EBL information to the State or local health agency, and the requirement to notify tenants whenever lead-based paint or a lead-based paint hazard is identified, are intended to address, in part, GAO's concerns about protecting children in public housing from lead-based paint poisoning (*See Lead-Based Paint Poisoning: Children in Public Housing Are Not Adequately Protected,* (GAO/RCED–93–138), and Secretary Cisneros' written reply to Senator John Glenn, past-Chairman, Committee on Government Affairs, United States Senate, December 20, 1993).

14. Subpart O—Tenant-Based Rental Assistance

This subpart sets out new lead-based paint requirements for the Department's tenant-based rental assistance programs. The Title X Task Force on Lead-Based Paint Hazard Reduction and Financing issued recommendations on reducing lead-based paint hazards in the Section 8 housing stock. The Task Force's June 1995 report, discussed in Section IV.B. of the Preamble above, provided the Department with a set of national ''benchmark standards'' to reduce lead-based paint hazards in private rental property. To the extent practicable, the proposed rule incorporates these standards into the lead-based paint requirements for tenant-based rental assistance programs.

As stated in Section V.A., the Department believes that Congress did not intend for HUD to apply the new minimum procedures for lead-based paint hazard notification, evaluation and reduction set out in Title X to tenant-based rental assistance. However, HUD does not believe that Congress intended to abolish HUD's current procedures, which serve to protect, in a minimal way, the recipients of this type of housing assistance. In this proposed rule, HUD continues to require tenant-based rental property to meet the minimal standards for lead-based paint found in the Department's HQS. The proposed rule slightly modifies these

standards to incorporate the spirit of Title X and its new lead-based paint terminology, as well as incorporating some of the recommendations of the Title X Task Force.

The requirements set forth in subpart O apply only to dwelling units in which a family with a child under age six resides. The scope of this subpart is more narrow than the scope of other program subparts, and deviates from Title X's directive to address lead-based paint hazards in *all* federally owned residential property or housing receiving Federal assistance (with limited exceptions for the elderly, disabled and single room occupancy dwelling units). The Department thought it reasonable to continue to restrict the lead-based paint requirements for the tenant-based rental assistance programs to dwelling units in which a family with a child under age six resides because of the program's ability to identify any changes in the composition of an assisted family. In addition, the HAs are able to monitor the property owner's compliance with HQS through initial and periodic dwelling unit inspections. These two safeguards will help to ensure that an HA will know whether a child under age 6 resides in a dwelling unit. It should be noted that an owner that refuses to rent a dwelling unit to a family with a child under the age of six may be in violation of the provisions of the Fair Housing Act prohibiting discrimination on the basis of familial status.

Because this subpart focuses on dwelling units with young children who are at greatest risk of lead poisoning, the Department has added a requirement for dust testing to the existing requirement for visual evaluation in order to identify potential lead-based paint hazards. This additional protection applies to initial inspections of rental property constructed prior to 1950, where lead-based paint hazards are more prevalent.

If a tenant has resided in a dwelling unit prior to the effective date of the regulation implementing Section 1018, the HA shall provide the tenant with a lead hazard information pamphlet at the next periodic dwelling unit inspection. Prior to approval by the HA for a family to lease a dwelling unit constructed before 1950, an HQS inspector shall conduct a visual evaluation of all painted surfaces to identify deteriorated paint and conduct dust sampling in accordance with part 37. Since the proposed rule does not require a complete risk assessment, and the Department recognizes the cost constraints faced by HAs, the HQS inspector need not be certified as a paint inspector or risk assessor in accordance with Section 402 of TSCA, in order to conduct dust tests. Rather, this subpart requires the HQS inspector to be trained in lead-based paint hazard evaluation that must include proper procedures for dust sampling and additional descriptive material concerning dust testing has been added to subpart B of part 37.

The owner shall repair deteriorated paint surfaces before occupancy of a vacant dwelling unit constructed before 1950, or where the pre-1950 dwelling unit is occupied, within 30 days of notification of the results of the visual evaluation. If dust sampling identifies lead-contaminated dust above the applicable level, cleanup of the horizontal surfaces in the room, dwelling unit or common areas where lead-contaminated dust is located must be completed prior to occupancy. If dust sampling does not indicate lead-contaminated dust, cleanup of the worksite must be completed prior to occupancy.

Prior to approval by the HA for a family to lease a dwelling unit constructed after 1949, an HQS inspector shall conduct a visual evaluation of all painted surfaces to identify deteriorated paint. The owner shall repair deteriorated paint surfaces and perform cleanup of the worksite prior to occupancy or, if the dwelling unit is unoccupied, within 30 calendar days of the results of the visual evaluation.

If an EBL child is identified in a dwelling unit receiving Federal assistance under this subpart, the owner shall complete a risk assessment of the dwelling unit where the EBL child resides within 15 calendar days of notification, and conduct interim controls to treat the identified lead-based paint hazards within 15 calendar days of receiving the risk assessment report. The HA shall also, to the extent practicable, attempt to obtain the names and addresses of EBL children from local public health agencies on an annual basis and match this information with the names and addresses of families receiving tenant-based rental assistance. As discussed in VII.A.1.(c) of the Preamble above, these additional lead-based paint requirements imposed on the tenant-based rental assistance programs when an EBL child is identified respond to concerns about protecting children living in Section 8 tenant-based rental property from lead poisoning (*See* the United States General Accounting Office report entitled ''Children in Section 8 Tenant-Based Housing are not Adequately Protected'' (GAO/RCED–94–137, dated May 13, 1994), and are consistent with the recommendations of the Title X Task Force.

The requirements of this subpart do not apply for specific deteriorated paint surfaces if the owner certifies that a limited paint inspection was completed with respect to the specific surfaces and indicated an absence of lead-based paint on those surfaces. An owner shall also be exempt from the evaluation and hazard reduction requirements of this subpart if certification is provided to the HA that the dwelling unit has been abated of all lead-based paint hazards.

The Department considered several options for addressing lead-based paint hazards in the tenant-based rental assistance program. The requirements set forth in subpart O attempt to strike a balance between the tradition of limiting Federal requirements imposed on the private housing stock associated with tenant-based rental assistance programs, and the recognition that as HUD's Reinvention shifts to tenant-based rental assistance instead of subsidies to public housing agencies, protections must continue to be provided to HUD clients living in private rental property (*See* Section III of the Preamble above).

B. Part 37

The requirements set forth in part 37 are designed to ensure that lead-based paint hazard evaluation and reduction activities are performed safely and effectively. They prescribe *''how''* these activities are to be accomplished. In writing part 37, the Department sought to balance the competing objectives of effectiveness and affordability by including only the requirements needed to achieve acceptable performance. The Department also incorporated performance-oriented requirements wherever possible, thereby allowing residential property owners to use the most cost-effective methods for their properties and to take advantage of cost-saving improvements in technology as they occur. The requirements included in part 37 are based on the HUD Guidelines, which contain standard methods for effectively identifying and controlling lead-based paint hazards, given current knowledge and technology.

1. Subpart A—General Requirements

Subpart A explains the purpose and applicability of part 37, noting that paint inspection, risk assessment and abatement activities (including clearance examinations) must be conducted by paint inspectors, risk assessors and abatement supervisors and workers certified in accordance

with EPA regulations (40 CFR 745.226). Part 37 provides interim requirements for these activities when paint inspectors, risk assessors and abatement supervisors and workers are not certified in accordance with EPA regulations. Recognizing that the supply of certified paint inspectors, risk assessors and abatement supervisors and workers may be inadequate at the effective date of this rule, this subpart also authorizes the Secretary to establish temporary qualifications for these individuals until such time as there is a sufficient number of certified personnel. In addition, Subpart A notes that any lead-based paint hazard evaluation and reduction activities that are *not* included in 40 CFR 745.226 (e.g. paint repair, interim controls) are to be conducted in accordance with the standards and methods set out at 24 CFR part 37. The Department requests comment on the level of detail necessary in 24 CFR part 37 to carry out the lead-based paint hazard evaluation and reduction requirements found at 24 CFR part 36.

Finally, Subpart A also includes a reference to the HUD Guidelines for more specific information, and a requirement for the accreditation of laboratories performing lead-based paint analyses by the EPA National Lead Laboratory Accreditation Program. Definitions applicable to 24 CFR part 36 are also applicable to part 37.

2. Subpart B—Risk Assessment

A risk assessment, as prescribed in subpart B, consists of a visual assessment to determine the condition of painted surfaces in the building and the need for structural repairs; limited environmental sampling of deteriorated paint, dust, and soil; and a written report that describes identified lead-based paint hazards and lists acceptable abatement or interim control methods for controlling these hazards. This subpart specifies, in some detail, elements of a visual assessment, the conditions that constitute lead-based paint hazards, and the requirements for testing paint, dust, and soil to determine whether such hazards are present. This subpart is written prescriptively because of the following reasons: (1) The risk assessment requirements found in part 37 are intended to be HUD's minimum requirements for performing risk assessments as required by 24 CFR part 36. The Department is concerned that without the guidance of this subpart, a risk assessor may include additional testing protocols that would not accurately reflect the Department's intent. In such a case, a HUD client may misinterpret the risk assessor's recommendations as the Department's minimum requirements for risk assessment. This could result in significant increases in cost to the Department and its clients; (2) the concept of risk assessment is new; (3) there does not exist at the time of this writing a well established consensus standard for risk assessments; (4) very few risk assessors have been trained and certified; and (5) housing authority employees with some degree of training, but not certified, will be performing dust and soil sampling for public housing and require more detailed guidance. The Department requests comments on these procedures particularly interpreting dust sample results to determine what surfaces should be cleaned.

Subpart B requires that a risk assessment be performed by risk assessors certified under EPA certification regulations. Recognizing that the supply of certified risk assessors may be inadequate at the effective date of this proposed rule, this subpart authorizes the Secretary to establish temporary qualifications for risk assessors until such time when State programs can produce a sufficient number of certified personnel.

This subpart incorporates EPA guidance for lead in dust, paint, and soil. At the time of this writing, EPA had not yet published the health-based standards mandated by Section 403 of TSCA (added pursuant to Section 1021 of Title X) that will apply to lead in dust (including dust in carpeted floors), paint or soil. When the health-based standards are published, HUD will consider modifying the requirements set out in 24 CFR parts 36 and 37, accordingly.

Because risk assessors will need guidance in evaluating surfaces with wall-to-wall carpeting, HUD has included in this proposed rule a dust standard for carpeted floors equal to the standard for hard surface floors. HUD believes that a carpet dust standard that parallels the threshold for hard floors provides a reasonable level of protection. HUD requests information on levels of lead dust in carpets that would be dangerous to young children, the prevalence of lead dust in carpets in the nation's housing stock, and effective and feasible methods of removing lead dust from carpets.

Under this subpart, risk assessments of multifamily properties must evaluate the conditions in every dwelling unit, except when five or more similar dwelling units are present. Among similar dwelling units, a targeted sample of dwelling units may be used as the basis for evaluating the nature and extent of lead-based paint hazards among all units. This subpart establishes parameters that must be satisfied when selecting a targeted sample of dwelling units.

The HUD Guidelines permit the use of a lead-based paint hazard screen in properties that are in good physical condition. This technique is a modified risk assessment using limited paint sampling and dust sampling of the floors and window troughs. The standards for passing a lead-based paint hazard screen are more stringent than those for passing a risk assessment. This procedure was excluded from the proposed rule because the results of sampling dust in window troughs would probably fail the standards set out in part 37 in a large majority of dwelling units. Window troughs are essentially an exterior window surface that is frequently in poor condition due to weathering; troughs are subject to continuous contamination and, therefore, are difficult to clean to the extent necessary in order to satisfy the standards set out in part 37.

3. Subpart C—Paint Inspection

A paint inspection, as prescribed in Subpart C, is a surface-by-surface investigation of all similarly painted surfaces in a dwelling unit, both interior and exterior, to determine the presence and location of lead-based paint. In multifamily properties, the paint inspection also includes an investigation of surfaces in the common areas of buildings.

This subpart specifies the minimum requirements for selecting surfaces to inspect in single family and multifamily property and identifies acceptable methods for testing the lead content of the paint on these surfaces with portable x-ray fluorescence (XRF) analyzers and, if necessary, laboratory analysis of paint samples. Paint inspections of multifamily property of 21 or more dwelling units may rely on the results from a random sample of units selected in accordance with the procedures established by this subpart. This sample is more extensive than that required in current HUD regulations and provides a 95 percent confidence level.

The purpose of a paint inspection is to identify the location of lead-based paint in a dwelling unit or building, not the presence of lead-based paint hazards. Paint inspections, as required by part 36, aid in planning abatement in modernization of public and Indian housing, and rehabilitation or renovation work by identifying the surfaces where precautions must be taken during construction to avoid creating lead-based paint hazards.

The requirements for paint inspection, like those for risk assessment, are much more prescriptive than existing regulations. This is so because (1) correct paint inspection procedures are essential to ensure accurate results, and (2) new paint inspection procedures have resulted from recent research by EPA and HUD.

4. Subpart D—Paint Repair

Paint repair constitutes the minimum treatment for deteriorated paint surfaces. It requires only surface preparation by acceptable methods, surface cleaning, repainting, and a modified cleanup of the immediate worksite. This subpart exempts treatment of deteriorated paint surfaces below a de minimis level.

5. Subpart E—Interim Controls

Subpart E, like subpart B concerning risk assessment, describes in prescriptive terms the requirements for performing effective interim control treatments to reduce lead-based paint hazards. Interim controls refer to a set of hazard reduction measures designed to achieve temporary control of identified lead-based paint hazards. The requirements are prescriptive because the concept of interim controls is new, and there is no established training or certification program for interim control workers. For this reason, the regulation requires these workers to be supervised by a certified abatement supervisor.

There are four basic types of interim control treatments: paint stabilization, friction and impact surface controls, dust controls, and soil controls. In addition to establishing requirements for these treatments, this subpart identifies methods that may not be used as interim controls. The subpart also specifies circumstances when interim controls are not acceptable hazard reduction methods. This subpart exempts treatment of deteriorated paint surfaces below a de minimis level.

Interim controls often have a lower initial cost than abatement methods. However, interim controls require regular monitoring and reevaluation because they are not permanent treatments. The cost of monitoring should be considered when deciding whether to use interim controls or to abate a lead-based paint hazard. For some hazards, abatement methods will be more cost-effective than interim controls when the cost of monitoring is considered.

6. Subpart F—Abatement

This subpart, which establishes the requirements for abatement, is written largely in performance terms (e.g. permanently eliminate the lead-based paint hazard) since abatement procedures are well established, and a significant number of qualified abatement supervisors and workers currently exists.

The regulation defines component replacement, enclosure, removal, and encapsulation as acceptable methods of abatement. It also prohibits seven methods of paint removal because they can easily contaminate the environment and/or are dangerous for workers to use. One abatement method, encapsulation, is prescribed in more detail, because there are no performance standards for encapsulants at this time.

There is no exclusion for deteriorated paint surfaces below a de minimis level from abatement requirements in subpart F. The two types of HUD programs that are most affected by the abatement requirements set out in this subpart are public and Indian housing projects and rehabilitation assistance programs. HAs are required under the Lead-Based Paint Act to abate *all* lead-based paint and lead-based paint hazards. For rehabilitation programs providing more than $25,000 in Federal rehabilitation assistance, abatement must occur on all lead-based paint surfaces to be disturbed by the rehabilitation. As a result, it is the Department's view that where abatement is required, an exclusion for a de minimis level would not be appropriate.

7. Subpart G—Occupant Protection and Worksite Preparation

This subpart establishes minimum requirements for protecting occupants of dwelling units undergoing lead-based paint hazard reduction activities from exposure to lead-based paint hazards while this work is being performed. It also establishes a performance requirement for preparing the hazard reduction worksite to prevent the uncontrolled release of lead-contaminated dust and debris beyond this area.

Lead-based paint hazard reduction activities frequently generate lead-based paint hazards while work is underway. Subpart G requires that the occupants of a dwelling unit undergoing hazard reduction not be permitted to enter the worksite until hazard reduction activities have been completed and the area has passed a clearance examination performed in accordance with subpart I. It also requires that occupant belongings be protected from contamination while work is in progress.

If occupants cannot safely live in a dwelling unit while lead-based paint hazard reduction is being performed, they must be temporarily relocated to a suitable dwelling unit until work is completed and the dwelling unit has passed a clearance examination. This subpart describes those circumstances when tenants can safely remain in the dwelling unit while hazard reduction is being performed. HUD recognizes that temporary relocation adds to the cost of hazard reduction and can inconvenience occupants. The Department believes that the provisions of this subpart require relocation only when it is essential to the safety of the occupants.

Protections are also needed to prevent any hazards generated during hazard reduction from spreading beyond the worksite. The level of protection needed to meet these requirements will vary depending on the type and extent of hazards to be treated, the methods of treatment, and the characteristics of the dwelling unit. HUD has not established a detailed set of protective measures that apply to all worksites because in some cases such protections would exceed those needed while in others, the protections would be inadequate. Instead, HUD is requiring that a properly certified risk assessor, abatement supervisor, or trained lead-based paint designer/planner determine the specific protections that must be used in a worksite to meet the requirements of this subpart.

8. Subpart H—Cleanup

Subpart H describes required cleanup activities following lead-based paint hazard reduction activities. Cleanup is the process of removing debris and dust.

The regulation specifies two types of cleanup activities: daily cleanup, and final cleanup. Daily cleanup is required at the end of each work day after hazard reduction activities. When cleaning debris, workers must use practices that minimize the generation of dust. Cleaning the troughs of windows is required in this process since they are frequent dust traps and can be cleaned along with the window sill. Troughs are not, however, required to be tested in the clearance examinations. Finally, the containment area's protective coverings must be examined and any defects repaired.

Final cleanup is performed after all hazard reduction activities have been completed. Final cleanup requirements establish safe practices for the removal of dust, debris and the protective coverings of the containment area. If the residential property is not required to pass a clearance examination, final cleanup may begin no sooner than one hour after hazard reduction activities have ceased.

The Department requests comments on the level of detail and the necessity of this subpart for the following reasons. If the final performance requirement is the safe reoccupancy of the residential property after passing a clearance examination, the need for cleanup regulations may be questionable. Although proper cleanup is a critical factor in satisfying clearance standards, the ultimate test is clearance which is likely not to occur if cleanup is neglected or incomplete. This is not intended to eliminate the requirement for modified cleanup in properties which have undergone lead-based paint hazard reduction work such as paint repair, but do not require a clearance examination.

9. Subpart I—Clearance

Subpart I establishes the minimum requirements for performing clearance examinations following lead-based paint hazard reduction. Clearance consists of a visual examination, dust testing and soil testing. A visual examination is done to ensure that all hazard reduction work was properly completed and to check for any remaining dust and debris. Dust testing is also required to confirm that no lead dust hazards remain in the residential property. This subpart establishes requirements for the number and location of dust and soil samples.

Clearance examinations may begin one hour after completing final cleanup. This is a significant change from previous guidance which required a 24-hour waiting period. The Department has acted upon analysis that indicates lead-contaminated dust settles much faster than originally determined—most of it within 1 hour.

Clearance examinations must be performed in all dwelling units and common areas in a multifamily property with less than 21 units. In properties with more than 21 dwelling units, a random sample of units may be examined if the dwelling units are selected in accordance with the unit sampling requirements established in subpart C. The regulation requires that components, rooms, or common areas that fail clearance testing be re-cleaned and retested until they pass.

10. Subpart J—Monitoring

Subpart J prescribes requirements for monitoring of residential properties to assure the effectiveness of the interim controls required in subpart E or other lead-based paint hazard reduction activities. If a residential property has no lead-based paint or has had all lead-based paint removed or permanently controlled (excluding encapsulation), monitoring is not required.

Monitoring consists of two types of activities: visual surveys by the property owner and a reevaluation by a risk assessor. A visual survey examines painted surfaces, lead-based paint hazard reduction treatments, and ground cover for signs of lead-based paint hazards. Any identified hazards must be promptly and safely corrected. In most cases, visual surveys will be performed annually.

A reevaluation is a modified risk assessment that includes a visual assessment of painted surfaces and lead-based paint hazard reduction treatments in conjunction with limited dust and soil sampling to determine if any hazards have developed since the most recent hazard reduction treatments were performed. This subpart establishes the minimum requirements for performing visual assessments, as well as dust and soil sampling. In multifamily properties with five or more similar dwelling units, a targeted sample of units selected in accordance with the unit selection requirements of subpart B, or a random sample selected according to requirements of subpart C, may be used as the basis for reevaluating all such units.

Reevaluations must be performed by a certified risk assessor (40 CFR 745.226) in accordance with the minimum schedule requirements established by this subpart. As part of each reevaluation, the risk assessor must prepare a report documenting the presence or absence of lead-based paint hazards, and acceptable control options for new hazards.

C. Regulatory Assessment

HUD has prepared a Regulatory Impact Analysis (RIA) that examines the costs and benefits of the proposed regulatory action in conjunction with this proposed rule. The major findings in the RIA are presented in this summary, organized into four sections appearing below: Cost-Benefit Analysis; Sensitivity Analysis and Regulatory Alternatives; Economic Impacts; and Environmental Justice. The complete document is available for inspection in the Office of the Rules Docket Clerk, Room 10276, 451 Seventh Street, SW, Washington, DC.

1. Cost-Benefit Analysis

The analysis of net benefits in the RIA reflects costs and benefits associated with the first year of hazard evaluation and reduction activities under the proposed rule. These costs and benefits, however, include the present value of future costs and benefits associated with first year hazard reduction activities. For example, the costs associated with first year activities include the present value of future reevaluation costs. Similarly, the benefits of first year activities include the present value of lifetime earnings benefits for children living in or visiting the affected unit during that first year, and for children living in or visiting that unit during the second and subsequent years after hazard reduction activities.

The present value of lifetime earnings benefits is particularly sensitive to discount rate assumptions in the analysis, because these benefits reflect lifetime earnings many decades into the future. The RIA presents estimated benefits of increased lifetime earnings using two different discount rates for lifetime earnings—3 percent and 7 percent. For estimates of costs and all other benefits, the RIA uses a 7 percent rate.

Employing a 3 percent discount rate of the lifetime earnings estimates, the RIA concludes that benefits of first-year activities are $1,538.2 million; costs are only $458 million. Thus the estimated net benefit is $1,080.2 million. If a 7 percent discount rate is used for lifetime earnings benefits, the present value of the benefits of the proposed rule associated with first year activities is estimated to be $497 million, and estimated costs remain at $458 million. The proposed rule would therefore realize a net-benefit of only $39 million using the 7 percent discount rate. Benefits and costs of the proposed rule using both discount rates are shown in Tables 7A and 7B.

While the Office of Management and Budget specifies 7 percent as the appropriate discount rate for most regulatory analyses, EPA's analysis of this issue (in the 1994 RIA for the proposed regulations implementing sections 402 and 404 of the Toxic Substances Control Act) has concluded that a 3 percent discount rate best reflects the social rate of time preference for annualized, non-capital costs and benefits. OMB guidance recognizes that a special social rate of time preference is appropriate when conducting intergenerational analysis. An intergenerational discount rate is applicable to the proposed rule because the costs will be borne by adult taxpayers, and lifetime earning benefits will be realized by the children and grandchildren of these adult taxpayers.

An intermediate approach, not quantified in the RIA, could have used a real discount rate based on the long-term borrowing costs of the Federal government. The 7 percent rate used in most regulatory analyses is intended to

reflect OMB's estimate of the opportunity cost of capital, based on the average real rates of return on private investments. This rate is appropriate for most regulatory analyses because most regulations impose costs on the private sector. The proposed rule, however, imposes costs on federally assisted housing. Most of these costs will be funded directly or indirectly by Federal expenditures. If these expenditures increase the national debt, then the real cost of that debt to future generations will compound at the real long-term Federal rate. The Internal Revenue Service's Applicable Federal Rate (AFR) measures the nominal cost of government borrowing over obligations with different maturities, and the long-term AFR adjusted for the implicit price deflator results in real AFRs of approximately 4 to 5 percent for the past 6 years. Therefore, benefits could be discounted at the same real AFR rate (*i.e.*, 4 to 5 percent).

By presenting results using both 3 and 7 percent, HUD is providing the broadest view of costs and benefits. Additional information on the methodology and results of the cost-benefit analysis is provided below.

Cost Estimation. The methodology used to estimate annual costs for the proposed rule is based on the following formula:

Regulatory Cost=(unit cost)×(unit cost frequency)×(number of affected units)

The ''unit cost'' estimates reflect the average estimated costs associated with specific hazard evaluation and reduction activities in a ''typical'' single or multifamily housing unit affected by the proposed rule. These unit cost estimates are based on interviews with lead-based paint hazard evaluation and abatement contractors, state officials, and other experts familiar with lead-based paint hazard evaluation and reduction costs. These cost estimates are also consistent with those presented in HUD's ''Comprehensive and Workable Plan for the Abatement of Lead-Based Paint in Privately Owned Housing'' (1990) and in the Lead-Based Paint Hazard Reduction and Financing Task Force report, ''Putting the Pieces Together: Controlling Lead Hazards in the Nation's Housing'' (1995).

Table 1 presents estimated average costs for lead-based paint hazard evaluation and both full and incremental cost estimates for hazard reduction activities. Incremental paint repair and abatement costs are those additional costs associated with the rule beyond the costs of non-lead-based paint repair and rehabilitation work in the absence of lead-based paint. Only incremental costs are incurred under rehabilitation programs, and full costs under other programs are offset by the estimated market values of routine paint repair and rehabilitation work.

Relocation costs are not included in this analysis, because HUD expects that relocation of occupants will rarely be required as a result of the proposed regulations. Most interim controls and small-scale abatements can be conducted without relocation by carefully containing dust to work areas and keeping occupants out of work areas. Relocation is usually only necessary in cases of extensive abatement of lead-based paint throughout the living areas of a housing unit. In the proposed regulations, abatement of lead-based paint or lead-based paint hazards is required in only two programmatic situations: public and Indian housing, and substantial rehabilitation projects receiving more than $25,000 per unit in Federal funds. This proposed rule, however, does not initiate the full abatement requirement in public and Indian housing; that requirement has been in place since 1986. In the case of substantial rehabilitation projects, it is unlikely that such housing will be occupied, so relocation will not be necessary. It is possible that extensive interim controls in occupied housing may necessitate relocation; but HUD believes this will be rare because, through the hazard control plan provision, HUD has given property owners receiving project-based assistance the flexibility to schedule such activity at the time of unit turnover. It is possible that extensive interim controls may sometimes be needed in units occupied by children with elevated blood-lead levels in public and Indian housing or in tenant-based assistance programs. HUD has not been able to estimate the frequency with which this will occur, but is of the opinion that it will be rare and that any such relocation costs will not materially affect the results of this cost-benefit analysis.

''Unit cost frequencies'' reflect the extent of required hazard evaluation activities under the proposed rule and the occurrence frequencies of different lead-based paint hazards that trigger hazard reduction requirements. Occurrence frequency estimates in this analysis generally reflect data from the National Survey of Lead-Based Paint in Housing completed in 1990 and are presented in Table 2. Estimates are provided for three construction-year intervals: Pre-1940, 1940–1959, and 1960–1977.

The ''number of affected units'' is the annual number of HUD-owned or assisted units affected by the proposed rule. Data gathered from each HUD program office indicates that more than 1.6 million housing units are affected Department-wide during the first year after promulgation. The number of affected units is shown in Table 3 by program and construction period.

The estimated incremental cost of the proposed rule during the first year of hazard evaluation and reduction activities is $458 million, or an average of $283 per unit, if it is assumed there are no appropriations to implement section 1013 of the Act for HUD-owned housing. The estimated incremental cost with appropriations is $572 million, or an average of $353 per unit. The estimated incremental cost by program is presented in Table 4.

TABLE 1.—ESTIMATED COSTS PER DWELLING UNIT FOR HAZARD EVALUATION AND REDUCTION ACTIVITIES

Unit cost activity	Cost per single family unit	Cost per multifamily unit
Hazard Evaluation:		
Visual Evaluation	$10	$5
Risk Assessment (RA)	375	260
RA and PI	550	400
Paint Inspection (PI)	400	300
2 composite dust tests	70	70
Clearance	150	120
Reevaluation	271	217
Hazard Reduction:		
Exterior paint repair	1,000	100

TABLE 1.—ESTIMATED COSTS PER DWELLING UNIT FOR HAZARD EVALUATION AND REDUCTION ACTIVITIES—Continued

Unit cost activity	Cost per single family unit	Cost per multifamily unit
Interior paint repair	500	500
Incremental exterior paint repair	100	10
Incremental interior paint repair	20	20
Incremental interior paint repair with rehab	60	40
Window work	300	200
Other friction/impact work	300	200
Soil cover	200	10
Exterior abatement	5,000	250
Interior abatement	3,000	2,000
Incremental exterior abatement	1,000	50
Incremental interior abatement	600	400
Area cleanup	75	75
Unit cleanup	450	300

TABLE 2.—ESTIMATED OCCURRENCE FREQUENCIES FOR COSTS AND BENEFITS

Unit cost occurrence trigger	(Percentage of all units): Freq.		
	Pre-1940	1940–1959	1960–1977
Multifamily Sample Testing:			
Risk assessment/RA and PI	16	16	16
Paint inspection only	23	23	23
Interior LBP Disturbed by Rehab:			
Single family interior <5K	45	22	11
Other Interior disturbed by rehab	80	40	20
Deteriorated Paint:			
Interior paint	41	24	9
Single family exterior deteriorated paint	42	28	12
Multifamily exterior deteriorated paint	21	14	6
Dust and Soil Hazards:			
Window sill dust >500 ug/sq. ft	54	14	13
Floor dust >100 ug/sq. ft	36	17	4
Bare soil >2000 ug/g	27	4	0
Deteriorated LBP:			
Interior LBP	16	6	3
Single family det. exterior LBP	28	12	6
Multifamily det. exterior LBP	14	6	3
Single family deteriorated interior plus exterior LBP	44	18	9
Multifamily deteriorated interior plus exterior LBP	30	12	6
Combined and Partial Hazards:			
Sill and/or floor dust	61	26	16
Interior deteriorated LBP without lead floor dust	3	3	2
Interior deteriorated paint without lead floor dust	14	13	5
Sill and/or floor dust and/or interior deteriorated LBP	4	29	18
Paint repair area dust	8	3	1

TABLE 3.—HUD-OWNED OR -ASSISTED HOUSING UNITS

Subparts	Number of units			Total
	Pre-1940	1940–1959	1960–1977	
Single Family Insurance	5,000	6,300	361,600	372,900
HUD-Owned Single Family Housing	22,528	12,672	20,240	55,440
Multifamily Insured	1,875	1,875	11,250	15,000
Multifamily Housing w/ Project-Based Assistance	25,030	25,030	74,484	124,544
HUD-Owned Multifamily Housing	991	3,364	18,592	22,947
Housing Rehab:				
HOME	2,090	2,578	243	.....
HOPE III	129	156	15	.....
CDBG	6,082	9,193	884	.....
Total Single Family Rehab <5K	8,301	11,927	1,142	21,370
HOME	8,832	10,680	1,026	.....
HOPE III	542	655	63	.....
CDBG	24,326	27,579	2,652	.....
Total Single Family Rehab 5K–25K	33,700	38,914	3,741	76,355
HOME	3,012	3,642	350	.....
HOPE III	189	229	22	.....

TABLE 3.—HUD-OWNED OR -ASSISTED HOUSING UNITS—Continued

Subparts	Number of units			Total
	Pre-1940	1940–1959	1960–1977	
CDBG	7,602	9,193	884	.....
Total Single Family Rehab >25K	10,803	13,064	1,256	25,123
HOME	2,960	2,247	274	.....
Multifamily	20	20	360	.....
CDBG	4,100	4,983	2,459	.....
Total Multifamily Rehab <5K	7,080	7,250	3,093	17,423
HOME	12,507	9,497	1,158	.....
Multifamily	80	80	1,440	.....
CDBG	12,300	14,950	7,376	.....
Total Multifamily Rehab 5K–25K	24,887	24,527	9,974	59,388
HOME	4,265	3,238	395	.....
Multifamily	10	10	180	.....
CDBG	4,101	4,983	2,459	.....
Total Multifamily Rehab >25K	8,376	8,231	3,034	19,641
Total Single Family Acquisition Under CPD Program	1,190	1,585	2,318	.....
Total Multifamily Acquisition Under CPD Program	1,998	1,514	2,591	.....
Pre-1950 Single Family Acquisition Under CPD Program	1,190	793	0	1,983
Pre-1950 Multifamily Acquisition Under CPD Program	1,998	757	0	2,755
Post-1949 Single Family Acquisition Under CPD Program	0	793	2,318	3,111
Post-1949 Multifamily Acquisition Under CPD Program	0	757	2,591	3,348
Public Housing	13,330	208,839	222,169	444,338
Indian Housing	259	4,050	4,308	8,617
Tenant-Based Rental Assistance:				
HOME	566	538	1,075	.....
Section 8	109,862	87,889	145,017	.....
Total	110,428	88,427	146,093	.....
Pre-1950	110,428	44,214	0	154,641
Post-1949	0	44,214	146,093	190,306
Total Number of Units	275,775	457,569	885,885	1,619,228

TABLE 4.—TOTAL COST BY PROGRAM

Subparts	Program cost			
	Pre-1940	1940–1959	1960–1977	Subpart total
Single Family Insured Housing	3,328,750	2,696,400	65,720,800	71,745,950
HUD-Owned Single Family Housing w/Appropriations	94,262,784	27,247,968	11,132,000	132,642,752
HUD-Owned Single Family Housing w/o Appropriations	14,772,736	5,296,896	3,476,220	23,545,852
Multifamily Insured Housing	490,781	294,375	705,938	1,491,094
Multifamily Housing w/ Project-Based Assistance	12,076,224	6,186,665	11,993,394	30,256,283
HUD-Owned Multifamily Housing w/Appropriations	1,563,699	2,686,490	2,472,736	6,722,925
HUD-Owned Multifamily Housing w/o Appropriations	254,439	511,328	1,073,688	1,839,455
Single Family Rehab <5K	2,278,625	3,273,962	313,479	5,866,065
Single Family Rehab 5K–25K	30,515,350	27,628,940	1,964,025	60,108,315
Single Family Rehab >25K	11,013,659	11,431,000	779,976	23,224,635
Multifamily Rehab <5K	1,940,628	1,982,150	843,152	4,765,930
Multifamily Rehab 5K–25K	10,176,294	5,685,359	1,367,435	17,229,088
Multifamily Rehab >25K	5,234,162	2,813,356	610,137	8,657,656
Pre-1950 Single Family CPD Program	1,212,610	466,386	0	1,678,996
Pre-1950 Multifamily CPD Program	1,022,976	214,231	0	1,237,207
Post-1949 Single Family CPD Program	0	331,265	398,117	729,382
Post-1949 Multifamily CPD Program	0	115,064	149,630	264,694
Public Housing	5,971,840	44,419,949	28,115,487	78,507,276
Indian Housing	257,350	1,932,053	1,261,382	3,450,785
Pre-1950 Single Family Tenant-Based Assistance	45,010,344	10,407,861	0	55,418,205
Pre-1950 Multifamily Tenant-Based Assistance	33,923,399	7,507,455	0	41,430,854
Post-1949 Single Family Tenant-Based Assistance	0	7,392,500	10,036,576	17,429,075
Post-1949 Multifamily Tenant-Based Assistance	0	4,032,273	5,062,116	9,094,388
Total Without Appropriations	179,480,167	144,619,466	133,871,551	457,971,184
Total With Appropriations	260,279,474	168,745,700	142,926,379	571,951,554
Average Cost per Unit Without Appropriations	651	316	151	283
Average Cost per Unit With Appropriations	944	369	161	353

Benefits Identification and Estimation Methodology. The methodology used to estimate annual benefits for the proposed rule is based on the following formula:

Regulatory Benefits=(unit benefit)×(unit benefit frequency)×(number of affected units).

This analysis is based on extensive academic and government research analyzing the risks of lead-poisoning and the benefits of lead-based paint hazard reduction. The ''unit benefit'' estimates are the average benefits per dwelling unit achieved by conducting hazard reduction activities. ''Unit benefit frequencies'' are determined by the occurrence frequencies of lead-based paint hazards (shown in Table 2), because benefits are realized by hazard reduction activities. The ''number of affected units'' is the annual number of HUD-owned or assisted units affected by the proposed rule (shown in Table 3).

The benefits of preventing elevated blood lead levels in young children have been monetized in published literature by Joel Schwartz of Harvard's School of Public Health in ''The Societal Benefits of Reducing Lead Exposure'' (1993), the Center for Disease Control (CDC) in ''Strategic Plan for the Elimination of Childhood Lead Poisoning'' (1991), and most recently in EPA's draft ''Title IV, Sections 402 and 404 Regulatory Impact Analysis'' (1994). Each of these sources identified the following types of monetized benefits that are directly applicable to the analysis of the benefits from the proposed rule:

—Reductions in medical costs, including physician visits, laboratory testing, chelation therapy, neuropsychological testing, and follow-up testing;
—Reductions in special education costs; and
—Increased lifetime earnings associated with higher cognitive abilities, such as increased intelligence and better academic performance in schools.

Monetized health benefits are divided into two categories: (1) Benefits achieved only for children with blood lead levels prevented from rising above 25 ug/dL; and (2) benefits achieved regardless of blood lead levels. The Schwartz, CDC, and EPA analyses included reduction in medical costs and special education costs in the first category, and increased lifetime earnings in the second. Non-rehabilitation programs also realize the market value benefits of housing quality improvements, as measured by the difference between the full and incremental costs of paint repair and abatement.

The proposed rule is not expected to produce any significant monetized benefits associated with reduced neonatal mortality. HUD's review of data suggests that neonatal mortality may not be a demonstrated or measurable risk at maternal blood levels below 10 ug/dL. Data from CDC's Third National Health and Nutrition Examination Survey (NHANES III) indicate that only 0.5 percent of reproductive-aged females have blood lead levels above 10 ug/dL, which suggests that the monetized benefit of avoided neonatal mortality may be just $0.23 per year per housing unit abated. In addition, the small percentage of reproductive-aged females with blood lead levels above 10 ug/dL may be primarily attributable to lead risks unrelated to residential lead-based paint hazards; CDC estimates that 94 percent of very high adult elevated blood lead levels result from occupational exposure, although some of these exposures will be controlled by the previous rule.

Non-Quantifiable Benefits. The following benefits of lead-based paint hazard reduction have not been estimated in monetary terms:

—Improving children's stature, hearing, and vitamin D metabolism;
—Reducing juvenile delinquency and the burden on the educational system;
—Avoiding the parental and family time, expenses, and emotional costs involved in caring for poisoned children;
—Reducing personal injury claims and court cases; and
—Aesthetic improvements in housing quality.

At Risk Population. Based on the NHANES III prevalence data and the neurotoxicological evidence, this analysis defines the principal at-risk population for lifetime earnings to be the national population of children aged one and two. Some studies suggest that children aged one and two are also the principal at-risk population for special education benefits, although older children will also experience significant benefits.

Reductions in Medical Costs and Special Education Costs. The estimates for reduced medical and special education costs are based on the Schwartz and CDC estimates, adjusted for inflation to 1994 dollars and to reflect NHANES III data on the current extent of childhood lead poisoning above 25 μg/dL. Reduced medical and special education costs are estimated at $1,800 and $4,000 per child, respectively.

Increased Lifetime Earnings. The estimate for increased lifetime earnings reflect EPA and CDC estimates, adjusted to reflect NHANES III data on the blood lead levels in young children. The analysis adopts the EPA estimate that a 1 year old infant loses $6,092 in lifetime earnings (based on 1993 dollars) per lost IQ point. If a 7 percent discount rate is used, a 1 year old infant loses $1,400 in lifetime earnings per lost I.Q. point. This total represents the direct link between IQ and the wage rate; the indirect effect of IQ on educational attainment; and the indirect effect of lead exposure on labor force participation. CDC and Schwartz estimate that 0.245 IQ points (standard error +/−0.41) are lost, on average, for each one μg/dL increase in a 1 year old child's blood lead level. Thus, preventing a one μg/dL increase in a 1 year old child's blood lead level saves $1,493 ($6,092×0.245) in lifetime earnings discounted at 3 percent, and saves $343 ($1,400×0.245) in lifetime earnings discounted at 7 percent. The potential benefit of increased earnings associated with blood lead reductions can be calculated by multiplying the potential blood lead decline for such young children by the value per unit of blood lead ($1,493 or $343 per one μg/dL, discounted at 3 or 7 percent, respectively). The potential blood lead reduction can be calculated by multiplying the average mean blood lead for children sensitive to cognitive losses by the total number of such at-risk children.

First Year Monetized Benefits for Resident Children Aged One and Two. Medical and special education benefits of avoiding lead poisoning are $5,800 for each child aged one or two prevented from developing elevated blood lead levels above 25 μg/dL. Census data indicate there are 7.5 million children aged one and two in the United States in 1990, and NHANES III data show that 0.6 percent of these children have blood lead levels above 25 μg/dL. Therefore, the potential first year medical and special education benefits of avoiding blood lead levels above 25 μg/dL in all U.S. children aged one and two are $261 million ($5,800×7.5 million×0.006). Benefits from increased earnings are $1,493 or $343 (depending on the discount rate used) multiplied by the total blood lead decline for all 1 and 2 year old children. NHANES III reported an average blood lead for 1 and 2 year olds of 4.1 μg/dL. If, for example, average blood lead could be reduced to 0.1 μg/dL for all 7.5 million of these children, then the potential benefit would be $44.8 billion

(4.0×7.5 million×$1,493) or $10.3 billion (4.0×7.5 million×$343) for all U.S. children. (Of course, the proposed regulations would affect only children in housing receiving Federal assistance and federally owned housing.) NHANES data suggest that lead-based paint hazard reduction activities can realize only a portion of this theoretical potential benefit of $44.8 billion or $10.3 billion, because the average blood lead for children with little or no lead-based paint hazard exposure (e.g., affluent children in newer housing) is approximately 2 μg/dL.

Unit Benefit of Lead Dust Hazard Reduction. American Housing Survey data indicate that 70 percent of young children live in pre-1978 units, or approximately 5.25 million children ages one and two. Based on the National Survey of Lead-Based Paint in Housing, it is estimated that 20 percent of these children live in housing units with dust lead levels on interior window sills of greater than 1,000 μg/ft² and another 4 percent are living in units with dust lead levels of 500–999 μg/ft². The average blood lead levels in the study by the University of Rochester School of Medicine and the National Center for Lead-Safe Housing, ''The Relation of Lead-Contaminated House Dust and Blood Levels Among Urban Children'' (1995), suggest that lead dust reduction could lower the average blood lead level of children living in the highest dust lead category (greater than 1,000 μg/ft²) by 5.47 μg/dL, and the average blood lead level in the category of 500–999 μg/ft² could be reduced by 2.47 μg/dL. These data are combined with the present value of lifetime earnings associated with each one μg/dL in blood lead ($1,493 or $343) and the estimated percentage of pre-1978 housing units failing the window dust standard to produce a monetized benefit of $516 or $118 per unit (using a 3 percent or 7 percent discount rate, respectively) brought up to standard.

5.25 million×(0.2)×(5.47)×($1,493)=$8.6 billion (using a three percent discount rate)

5.25 million×(0.2)×(5.47)×($343)=$1.97 billion (using a seven percent discount rate)

5.25 million×(0.04)×(2.47)×($1,493)= $0.8 billion (using a three percent discount rate)

5.25 million×(0.04)×(2.47)×($343)=$0.18 billion (using a seven percent discount rate)

Monetized benefit of enforcing dust standard in all units=$9.4 billion (using a 3 percent discount rate) and $2.5 billion (using a seven percent discount rate).

24% of 75.8 million pre-1979 housing units failing window dust standard=18.2 million units

Monetized benefit per unit brought up to standard=$516/unit using a 3 percent discount rate and $118/unit using a 7 percent discount rate.

Unit Benefit of Paint Repair. The RIA presents a summary of recent studies of lead-based paint hazard reduction benefits, as measured by reductions in childhood elevated blood lead levels. These studies are presented to illustrate why the subsequent analysis of paint repair distinguishes between the direct benefit of avoided paint chip ingestion and the indirect benefit of reduced lead dust hazards associated with interior deteriorated lead-based paint. This distinction is essential to avoid double counting of benefits.

Although the frequency of children with high elevated blood lead levels has declined, recent research indicates that paint chip ingestion is still a significant factor in the prevalence of very high blood lead levels in children. Analysis of data from abdominal radiographs of children in St. Louis with high blood lead levels indicates that approximately one-fourth of all childhood blood lead levels above 25 μg/dL may be attributable to paint chip ingestion. Based on the same data, it is estimated that the average blood lead level for all children above 25 μg/dL due to paint chip ingestion is approximately 40 μg/dL above the Rochester mean of 6.37 μg/dL for those children living in units belonging to the lowest dust lead category (under 249 μg/ft ²).

This analysis assumes that the estimated lifetime earnings benefit of avoided paint chip ingestion does not double count the estimated benefits for dust reduction because the Rochester study excluded children with medical interventions for very high elevated blood lead levels. Therefore, the Rochester data probably excluded children recovering from paint chip ingestion. Conversely, this analysis assumes that the Rochester data used in the unit benefit analysis for lead dust removal also reflects benefits for the fraction of elevated blood lead children under 25 μg/dL that may be recovering from paint chip ingestion, because the Rochester data showed a clear correlation between deteriorated lead-based paint and lead dust levels.

Data on the number of 1 and 2 year olds in pre-1978 housing (5.25 million), the percentage of these children with very high elevated blood lead levels due to paint chip ingestion (25 percent of 0.6 percent = 0.15 percent), the average blood lead decline for all children above 25 μg/dL achieved by repairing deteriorated lead-based paint (40 μg/dL), and the lifetime earnings benefit achieved by each one μg/dL decline in blood lead ($1,493 or $343) combine to produce a $535 million or $123 million total benefit of avoided paint chip ingestion. Combined with National Survey data that indicates about 20 percent of the inventory has deteriorated lead-based paint (15 million), the monetized benefit per unit in the first year of lead-based paint repair is $36 or $12 per unit, using a 3 percent or 7 percent discount rate, respectively.

National Survey data indicates that approximately 78 percent of units with deteriorated interior lead-based paint also fail the standards for window sill and/ or floor dust lead. By contrast, only 30 percent of the units with no deteriorated interior lead-based paint fail the dust standards. These data suggest that more than 60 percent of the dust hazards in units with deteriorated interior lead-based paint are attributable to that deteriorated lead-based paint.

The higher frequency of dust hazards in units with deteriorated interior lead-based paint is at least partially explained by correlation that does not reflect causation, because deteriorated lead-based paint and dust and soil hazards are all disproportionately concentrated in pre-1940 housing. However, National Survey data also indicate that dust hazards are approximately twice as common in post-1940 units with deteriorated lead-based paint as in post-1940 units without deteriorated interior lead-based paint. Therefore, this analysis assumes that area cleanup after paint repair realizes the same benefits as unit cleanup in one-half of the units with deteriorated lead-based paint.

Unit Benefit of Soil Hazard Reduction. The estimated unit benefit of soil cover is based on the EPA-funded study by Ann Aschengrau et. al., ''The Impact of Soil Lead Abatement on Urban Children's Blood Lead Levels: Phase II Results from the Boston Lead-in-Soil Lead Demonstration Project'' (1994), which tested the hypothesis that a reduction of lead in soil accessible to children would result in a decrease in blood lead levels. In this study, the mean blood lead level of the children whose homes received soil hazard reduction plus paint repair and dust removal declined by 2.5 μg/dL more than a comparison group whose homes just received dust removal and paint repair. With eight percent of units failing the proposed soil standard, the calculated total benefit of covering all soil that fails the standard is $1.57

billion or $361 million, which is a $261 or $60 benefit per unit with soil cover, using a 3 percent or 7 percent discount rate, respectively.

The proposed rule requires soil abatement when lead in bare soil exceeds 5,000 μg/g, but National Survey data indicate that only 3 percent of U.S. homes exhibit soil lead above this concentration. The costs of abating soil lead hazards (i.e. removing/replacing the soil, or providing permanent cover) will exceed the cost of interim control soil cover, but benefits would also be realized over many more years. The RIA estimates only the costs and benefits of soil cover for all soil hazards above 2000 μg/g, because the net effect of incorporating soil abatement costs and benefits for the small percentage of affected units is not expected to materially affect the cost-benefit analysis.

Duration of Benefits. The unit benefit estimates derived for lead dust and soil hazard reduction and paint repair are first year benefits, almost entirely attributable to the present value of increased lifetime earnings associated with higher IQs resulting from the prevention of childhood lead poisoning among resident children ages one and two. This present value represents only the first year benefit because additional benefits will accrue to a new population of 1 year olds each year, and to children older than 1 who move into or visit units in the years after hazard reduction activities are performed. Therefore, a critical issue in assigning total unit benefits to specific hazard reduction activities is the expected duration of risk reductions associated with those activities.

This analysis assumes that benefits from lead dust reduction activities associated with interim controls are realized for 4 years. In those cases where the proposed rule requires lead-based paint hazard abatement, the analysis assumes that dust benefits are realized for 8 years. These estimates are based on studies by Farfel et. al. (1994) and Clark (1995) that measured dust lead reaccumulation rates in treated housing. Farfel studied lead dust levels in abated units over a maximum 3.5 year period. From the data in the article, dust lead reaccumulation rates on floors and interior window sills following abatement were 11 μg/ft² per year and 36 μg/ft² per year, respectively. Since the guidance level for floors and sills is 100 μg/ft² and 500 μg/ft² respectively, these data suggest it would take approximately 8 years for dust lead to reaccumulate to levels above the clearance standards following abatement, assuming a linear increase (average dust lead levels at clearance were 14 μg/ft² for floors, and 13 μg/ft² for sills in the Farfel study). Unpublished data from the Cincinnati part of the EPA Three Cities Soil Abatement study by Clark generally support this conclusion. In the Three Cities Study in Cincinnati, soil was abated but no paint abatement or interim controls occurred. Lead dust reaccumulation rates were 10–15 μg/ft² per year on floors and 20–35 μg/ft² per year on sills, which is generally consistent with Farfel's work. For the purposes of this regulatory impact analysis, we have assumed that abatement will be twice as effective as interim controls in controlling dust lead levels over time. Paint repair benefits of avoided paint chip ingestion are realized for 5 years because paint repair should provide approximately 5 years of protection against significant amounts of deteriorated lead-based paint, as most paint will last at least 5 years. The annual unit benefit for soil cover is assumed to provide 5 years of benefits, because the proposed rule requires repair of any deteriorated exterior lead-based paint whenever soil cover is required. This assumption reflects National Survey data indicating a very high correlation between exterior deteriorated lead-based paint and soil hazards.

At this point in the analysis, the first year benefits calculated for resident 1 and 2 year olds also do not include any benefits for infants under age one, or for children over age three. Furthermore, these estimates do not include any benefits for other children who may visit units where hazard reduction activities are performed, because first year benefits were calculated only for children living in units with lead-based paint hazards. The total monetized unit benefits of lead-based paint hazard reduction activities and rough estimates for additional benefits realized by children other than the 1 and 2 year olds actually residing in targeted units is shown in both Tables 5A (3 percent discount rate) and 5B (7 percent discount rate). The first row in each table shows the first year benefit for resident 1 and 2 year olds for each type of lead-based paint hazard activity. The second row shows the estimated additional first year benefits for resident children ages 3 and older and for other children visiting the targeted unit. This analysis assumes that the sum of these benefits is 50 percent of the benefits realized by 1 and 2 year olds. The third line shows the second-year benefit for a new population of 1 year-olds, discounted at 7 percent. The fourth line shows the estimated second-year benefit for children visiting the unit and for new residents, discounted at 7 percent. This analysis assumes that second-year benefits for these other children are 20 percent of the benefit for the new population of 1 year-olds in the targeted units. This percentage is lower than the ''other benefit'' assumption for the first year, because any new population of resident children over the age of one would be limited to units with new residents (i.e., resulting from unit turnover). The benefits for years 3 through 20 are calculated using the same assumptions as applied to year 2, reflecting the anticipated average duration of each unit benefit.

Total First-Year Benefit Estimation. The estimated total benefit of first-year hazard evaluation and reduction activities is $1.54 billion or $496.6 million, which is an average of $950 or $307 per unit using a 3 percent or a 7 percent discount rate, respectively, assuming no appropriations for treatment of HUD-owned housing. The estimated benefit with appropriations is $1.64 billion or $563.1 million, which is an average of $1,014 or $348 per unit (using a 3 percent or a 7 percent discount rate, respectively). Total benefits by program are presented in Tables 6A and 6B.

Net Benefit Estimation. Estimated net benefits reflect the difference between costs and benefits associated with the first year of hazard evaluation and reduction activities under the proposed rule. These costs and benefits, however, include the present value of future costs and benefits associated with first year hazard reduction activities (e.g., reevaluation costs, lifetime earnings benefits, and benefits associated with the second and subsequent years after hazard reduction activities).

The first-year total net benefits are $1.08 billion or $38.6 million without appropriations for HUD-owned housing and $1.07 billion or $8.8 million with appropriations. Tables 7A (3 percent discount rate) and 7B (7 percent discount rate) present summaries of the estimated incremental costs, benefits, and net benefits of the first-year activities under the proposed rule, without appropriations for HUD-owned housing. Tables 8A (3 percent discount rate) and 8B (7 percent discount rate) present incremental net benefit (cost) data by program. Tables 9A (3 percent discount rate) and 9B (7 percent discount rate) present estimated incremental benefit (cost) data per dwelling unit by program.

Use of Cost-Benefit Analysis in Policy Development HUD has sought, within the flexibility provided in the statute, to

maximize the benefits relative to the costs that will derive from the proposed regulations. The cost-benefit analysis was useful in estimating the net benefit that might accrue from alternative lead-based paint policies.

An example of how this occurred is in the tenant-based rental assistance programs (subpart O of Part 36). One policy option for these programs was to apply the requirements under these programs to all housing units, as was done in other subparts of the rule. An alternative was to continue the current policy of limiting the applicability of the requirements only to housing occupied by families with young children. (This alternative was uniquely available in the tenant-based assistance programs, because the composition of the households receiving the rental assistance is known to the agencies administering the program.) As shown in tables 5A and 5B, the cost-benefit analysis indicates that limiting applicability to units occupied by young children yields benefits per affected unit in the tenant-based assistance programs that are over four times those in other programs. Therefore the limitation on applicability was retained in the proposed rule.

Another policy issue in the tenant-based assistance programs was whether to require any testing for lead-based paint hazards or to retain the current policy of not requiring dust testing and only requiring treatment of deteriorated paint. Based on the cost-benefit analysis, HUD concluded that the maximum net benefit of dust testing would derive from composite testing of housing built prior to 1950 combined with a thorough cleanup of housing units that had lead-contaminated dust. Therefore, that policy is being proposed.

Another example of use of cost-benefit analysis is found in the project-based rental assistance programs. The Department is proposing to give property owners in these programs the flexibility to gain some of the efficiencies available from prioritizing hazard reduction according to urgency. As explained above, under subpart I, part 36, HUD is proposing that owners with properties found to have lead-based paint hazards must prepare a hazard reduction plan that will include a schedule of hazard reduction activities consistent with the findings and recommendations of the risk assessment report. It is the Department's intent that owners should use the hazard reduction plan to schedule hazard reduction actions in order of priority, in accordance with the specific conditions of each property. For example, units occupied by young children could be treated immediately, and those not occupied by children might be treated at turnover to take advantage of the economies of working in vacant units. This will maintain benefits while minimizing costs.

2. Sensitivity Analysis and Regulatory Alternatives

The estimate of benefits is very sensitive to certain assumptions: (1) That blood lead levels have remained steady since phase I of NHANES III, (2) that the estimated loss of IQ associated with increased blood lead levels is correct, (3) that the amount of lifetime earnings lost per IQ point lost is correct, and (4) that the blood lead to IQ relationship holds at all blood lead levels. In addition, the RIA assumes that market value benefits offset all paint repair and abatement costs, except for incremental costs, and that lead hazard education activities play a role in reducing the reaccumulation of lead dust.

TABLE 5A.—SUMMARY TABLE OF MONETIZED UNIT BENEFITS DISCOUNTING INCREASED LIFETIME EARNINGS AT 3 PERCENT

Source of benefits	Unit dust 4 year	Unit dust 8 year	Paint repair	Paint hazard abatement	Soil cover
1st Year, 1 and 2 year olds	$516	$516	$36	$36	$261
1st Year, other	258	258	18	18	130
2nd Year, 1 year olds	241	241	17	17	122
2nd Year, other	48	48	3	3	25
3rd and 4th Year, 1 year olds	436	436	30	30	221
3rd and 4th Year, other	87	87	6	6	43
5th Year, 1 year olds	.....	197	14	14	100
5th Year, other	.....	39	3	3	20
Years 6–8, 1 year olds	.....	517	.....	36	.....
Years 6–8, other	.....	103	.....	7	.....
Years 9–20, 1 year olds	.....	.....	.....	118	.....
Years 9–20, other	.....	.....	.....	24	.....
Total $	1,586	2,442	127	312	922
Tenant-Based Assistance	8,882	.....	711	.....	.....
Public Housing	2,165	.....	173	.....	1,258
Project Based Assistance	2,062	.....	165	.....	1,199
Resident children aged 1 and 2	75%	78%	76%	80%	(76%)
Other children	25%	22%	24%	20%	(24%)

TABLE 5B.—SUMMARY TABLE OF MONETIZED UNIT BENEFITS DISCOUNTING INCREASED LIFETIME EARNINGS AT 7 PERCENT

Source of benefits	Unit dust 4 year	Unit dust 8 year	Paint repair	Paint hazard abatement	Soil cover
1st Year, 1 and 2 year olds	$118	$118	$12	$12	$60
1st Year, other	59	59	6	6	30
2nd Year, 1 year olds	55	55	6	6	28
2nd Year, other	11	11	1	1	6

TABLE 5B.—SUMMARY TABLE OF MONETIZED UNIT BENEFITS DISCOUNTING INCREASED LIFETIME EARNINGS AT 7 PERCENT—Continued

Source of benefits	Unit dust 4 year	Unit dust 8 year	Paint repair	Paint hazard abatement	Soil cover
3rd and 4th Year, 1 year olds	100	100	10	10	51
3rd and 4th Year, other	20	20	2	2	10
5th Year, 1 year olds	.....	45	5	5	23
5th Year, other	.....	9	1	1	5
Years 6–8, 1 year olds	.....	118	.....	12	.....
Years 6–8, other	.....	24	.....	2	.....
Years 9–20, 1 year olds	.....	.....	.....	30	.....
Years 9–20, other	.....	.....	.....	6	.....
Total $	363	559	43	93	213
Tenant-Based Assistance	2,033	.....	241	.....	.....
Public Housing	495	.....	59	.....	290
Project Based Assistance	472	.....	56	.....	277
Resident children aged 1 and	275%	78%	76%	80%	(76%)
Other children	25%	22%	24%	20%	(24%)

TABLE 6A.—TOTAL BENEFIT BY PROGRAM DISCOUNTING INCREASED LIFETIME EARNINGS AT 3 PERCENT

Subparts	Program benefit			
	Pre-1940	1940–1959	1960–1977	Subpart total
Single Family Insured Housing	$3,787,800	$2,757,132	$64,541,984	$71,086,916
HUD-Owned Single Family Housing w/ Appropriations	102,093,292	24,126,981	0	126,220,273
HUD-Owned Single Family Housing w/o Appropriations	17,066,312	5,545,774	3,612,638	26,224,723
Multifamily Insured Housing	713,775	357,413	810,900	1,882,088
Multifamily Housing w/ Project-Based Assistance	43,062,864	15,971,142	26,584,785	85,618,791
HUD-Owned Multifamily Housing w/ Appropriations	2,858,203	3,987,147	0	6,845,350
HUD-Owned Multifamily Housing w/o Appropriations	377,254	641,246	1,340,111	2,358,611
Single Family Rehab <5K	6,873,228	4,843,197	231,141	11,947,566
Single Family Rehab 5K–25K	55,770,130	28,692,070	1,310,173	85,772,374
Single Family Rehab >25K	26,874,623	15,072,198	701,376	42,648,197
Multifamily Rehab <5K	9,828,314	5,022,945	1,071,446	15,922,706
Multifamily Rehab 5K–25K	40,743,005	17,897,352	3,455,093	62,095,451
Multifamily Rehab >25K	20,688,050	9,433,549	1,682,687	31,804,286
Pre-1950 Single Family CPD Program	1,901,787	635,918	0	2,537,704
Pre-1950 Multifamily CPD Program	2,440,077	420,438	0	2,860,515
Post-1949 Single Family CPD Program	0	346,830	413,740	760,570
Post-1949 Multifamily CPD Program	0	144,299	186,759	331,059
Public Housing	24,015,461	139,541,709	83,064,546	246,621,716
Indian Housing	533,862	3,163,698	1,854,034	5,551,594
Pre-1950 Single Family Tenant-Based Assistance	278,527,893	49,598,721	0	328,126,614
Pre-1950 Multifamily Tenant-Based Assistance	387,403,895	66,915,563	0	454,319,457
Post-1949 Single Family Tenant-Based Assistance	0	13,469,912	17,765,470	31,235,382
Post-1949 Multifamily Tenant-Based Assistance	0	12,722,350	15,785,036	28,507,386
Total Without Appropriations	920,608,330	393,193,456	224,411,917	1,538,213,703
Total With Appropriations	1,008,116,258	415,120,564	219,459,168	1,642,695,991
Average Benefit per Unit Without Appropriations	3,338	859	253	950
Average Benefit per Unit With Appropriations	3,656	907	248	1,014

TABLE 6B.—TOTAL BENEFIT BY PROGRAM DISCOUNTING INCREASED LIFETIME EARNINGS AT 7 PERCENT

Subparts	Program benefit			
	Pre-1940	1940–1959	1960–1977	Subpart total
Single Family Insured Housing	$3,113,800	$2,430,729	$57,385,920	$62,930,449
HUD-Owned Single Family Housing w/ Appropriations	69,733,622	17,064,115	0	86,797,737
HUD-Owned Single Family Housing w/o Appropriations	14,029,537	4,889,238	3,212,088	22,130,863
Multifamily Insured Housing	483,075	269,719	616,613	1,369,406
Multifamily Housing w/ Project-Based Assistance	11,736,817	4,373,242	7,148,962	23,259,021
HUD-Owned Multifamily Housing w/ Appropriations	1,465,094	2,156,391	0	3,621,486
HUD-Owned Multifamily Housing w/o Appropriations	255,321	483,911	1,019,028	1,758,260
Single Family Rehab <5K	1,677,217	1,183,278	56,403	2,916,898

TABLE 6B.—TOTAL BENEFIT BY PROGRAM DISCOUNTING INCREASED LIFETIME EARNINGS AT 7 PERCENT—Continued

Subparts	Program benefit			
	Pre-1940	1940–1959	1960–1977	Subpart total
Single Family Rehab 5K–25K	13,289,595	6,851,977	313,421	20,454,993
Single Family Rehab >25K	6,386,193	3,585,807	167,023	10,139,023
Multifamily Rehab <5K	2,342,206	1,196,105	255,142	3,793,452
Multifamily Rehab 5K–25K	9,664,369	4,255,435	822,755	14,742,558
Multifamily Rehab >25K	4,901,049	2,238,009	399,547	7,538,605
Pre-1950 Single Family CPD Program	970,029	371,936	0	1,341,965
Pre-1950 Multifamily CPD Program	899,160	172,096	0	1,071,256
Post-1949 Single Family CPD Program	0	305,770	367,867	673,637
Post-1949 Multifamily CPD Program	0	108,894	142,013	250,907
Public Housing	6,496,376	37,920,895	22,181,353	66,598,623
Indian Housing	190,000	1,165,266	658,736	2,014,002
Pre-1950 Single Family Tenant-Based Assistance	84,851,344	16,609,426	0	101,460,770
Pre-1950 Multifamily Tenant-Based Assistance	101,248,758	18,179,713	0	119,428,471
Post-1949 Single Family Tenant-Based Assistance	0	8,339,907	11,291,221	19,631,128
Post-1949 Multifamily Tenant-Based Assistance	0	5,775,435	7,309,608	13,085,042
Total Without Appropriations	262,534,846	120,706,786	113,347,699	496,589,331
Total With Appropriations	319,448,703	134,554,144	109,116,583	563,119,430
Average Benefit per Unit Without Appropriations	952	264	128	307
Average Benefit per Unit With Appropriations	1,158	294	123	348

TABLE 7A.—COST-BENEFIT SUMMARY FOR FIRST YEAR ACTIVITIES DISCOUNTING INCREASED LIFETIME EARNINGS AT 3 PERCENT

[Millions of dollars, without appropriations]

Hazard Evaluation Costs	$98.4
Hazard Reduction Costs:	
Paint repair	197.5
Friction/impact work	56.8
Soil cover	3.2
Paint hazard abatement	10.4
Dust cleanup	91.7
Total First Year Costs	458.0
Monetized Benefits:	
Paint repair	77.4
Paint hazard abatement	7.7
Soil cover	47.1
Dust cleanup	1,230.4
Paint Repair Market Value	175.6
Total First Year Benefits	1,538.2
Total First Year Net Benefits	1,080.2

TABLE 7B.—COST-BENEFIT SUMMARY FOR FIRST YEAR ACTIVITIES DISCOUNTING INCREASED LIFETIME EARNINGS AT 7 PERCENT

[Millions of dollars, without appropriations]

Hazard Evaluation Costs	$98.4
Hazard Reduction Costs:	
Paint repair	197.5
Friction/impact work	56.8
Soil cover	3.2
Paint hazard abatement	10.4
Dust cleanup	91.7
Total First Year Costs	458.0
Monetized Benefits:	
Paint repair	26.2
Paint hazard abatement	2.3
Soil cover	10.9
Dust cleanup	281.6

TABLE 7B.—COST-BENEFIT SUMMARY FOR FIRST YEAR ACTIVITIES DISCOUNTING INCREASED LIFETIME EARNINGS AT 7 PERCENT—Continued

[Millions of dollars, without appropriations]

Paint Repair Market Value	175.6
Total First Year Benefits	496.6
Total First Year Net Benefits	38.6

TABLE 8A.—NET BENEFIT (COST) BY PROGRAM DISCOUNTING INCREASED LIFETIME EARNINGS AT 3 PERCENT

Subparts (Tables)	Net program benefit (cost)			Subpart total
	Pre-1940	1940–1959	1960–1977	
Single Family Insured Housing	$459,050	$60,732	($1,178,816)	($659,034)
HUD-Owned Single Family Housing w/ Appropriations	7,830,508	($3,120,987)	($11,132,000)	($6,422,479)
HUD-Owned Single Family Housing w/o Appropriations	2,293,576	248,878	136,418	2,678,871
Multifamily Insured Housing	222,994	63,038	104,963	390,994
Multifamily Housing w/ Project-Based Assistance	30,986,639	9,784,477	14,591,391	55,362,508
HUD-Owned Multifamily Housing w/ Appropriations	1,294,504	1,300,657	($2,472,736)	122,425
HUD-Owned Multifamily Housing w/o Appropriations	122,815	129,918	266,423	519,156
Single Family Rehab <5K	4,594,604	1,569,235	($82,338)	6,081,501
Single Family Rehab 5K–25K	25,254,780	1,063,130	($653,852)	25,664,059
Single Family Rehab >25K	15,860,965	3,641,198	($78,600)	19,423,562
Multifamily Rehab <5K	7,887,686	3,040,795	228,294	11,156,776
Multifamily Rehab 5K–25K	30,566,711	12,211,993	2,087,658	44,866,362
Multifamily Rehab >25K	15,453,888	6,620,193	1,072,549	23,146,630
Pre-1950 Single Family CPD Program	689,177	169,532	0	858,708
Pre-1950 Multifamily CPD Program	1,417,101	206,207	0	1,623,308
Post-1949 Single Family CPD Program	0	15,565	15,623	31,188
Post-1949 Multifamily CPD Program	0	29,235	37,129	66,364
Public Housing	18,043,621	95,121,760	54,949,059	168,114,440
Indian Housing	276,512	1,231,646	592,652	2,100,809
Pre-1950 Single Family Tenant-Based Assistance	233,517,549	39,190,859	0	272,708,409
Pre-1950 Multifamily Tenant-Based Assistance	353,480,495	59,408,108	0	412,888,603
Post-1949 Single Family Tenant-Based Assistance	0	6,077,413	7,728,894	13,806,307
Post-1949 Multifamily Tenant-Based Assistance	0	8,690,078	10,722,920	19,412,998
Total Without Appropriations	741,128,163	248,573,990	90,540,366	1,080,242,519
Total With Appropriations	747,836,784	246,374,864	76,532,789	1,070,744,437

TABLE 8B.—NET BENEFIT (COST) BY PROGRAM DISCOUNTING INCREASED LIFETIME EARNINGS AT 7 PERCENT

Subparts (tables)	Net program benefit (cost)			Subpart total
	Pre-1940	1940–1959	1960–1977	
Single Family Insured Housing	($214,950)	($265,671)	($8,334,880)	($8,815,501)
HUD-Owned Single Family Housing w/ Appropriations	(24,529,162)	(10,183,853)	(11,132,000)	(45,845,015)
HUD-Owned Single Family Housing w/o Appropriations	(743,199)	(407,658)	(264,132)	(1,414,989)
Multifamily Insured Housing	(7,706)	(24,656)	(89,325)	(121,688)
Multifamily Housing w/ Project-Based Assistance	(339,407)	(1,813,424)	(4,844,431)	(6,997,262)
HUD-Owned Multifamily Housing w/ Appropriations	(98,605)	(530,099)	(2,472,736)	(3,101,440)
HUD-Owned Multifamily Housing w/o Appropriations	882	(27,417)	(54,660)	(81,195)
Single Family Rehab <5K	(601,407)	(2,090,684)	(257,076)	(2,949,167)
Single Family Rehab 5K–25K	(17,225,755)	(20,776,963)	(1,650,604)	(39,653,322)
Single Family Rehab >25K	(4,627,465)	(7,845,193)	(612,953)	(13,085,611)
Multifamily Rehab <5K	401,578	(786,045)	(588,010)	(972,478)
Multifamily Rehab 5K–25K	(511,926)	(1,429,924)	(544,680)	(2,486,530)
Multifamily Rehab >25K	(333,114)	(575,347)	(210,590)	(1,119,050)
Pre-1950 Single Family CPD Program	(242,582)	(94,450)	0	(337,032)
Pre-1950 Multifamily CPD Program	(123,816)	(42,135)	0	(165,951)
Post-1949 Single Family CPD Program	0	(25,495)	(30,250)	(55,745)
Post-1949 Multifamily CPD Program	0	(6,170)	(7,618)	(13,787)
Public Housing	524,536	(6,499,054)	(5,934,134)	(11,908,653)
Indian Housing	(67,350)	(766,787)	(602,646)	(1,436,782)
Pre-1950 Single Family Tenant-Based Assistance	39,841,001	6,201,564	0	46,042,565
Pre-1950 Multifamily Tenant-Based Assistance	67,325,359	10,672,258	0	77,997,617
Post-1949 Single Family Tenant-Based Assistance	0	947,407	1,254,645	2,202,052
Post-1949 Multifamily Tenant-Based Assistance	0	1,743,162	2,247,492	3,990,654
Total Without Appropriations	83,054,679	(23,912,680)	(20,523,853)	38,618,147

TABLE 8B.—NET BENEFIT (COST) BY PROGRAM DISCOUNTING INCREASED LIFETIME EARNINGS AT 7 PERCENT—Continued

Subparts (tables)	Net program benefit (cost)			Subpart total
	Pre-1940	1940–1959	1960–1977	
Total With Appropriations	59,169,229	(34,191,557)	(33,809,796)	(8,832,124)

TABLE 9A.—NET BENEFIT (COST) PER UNIT BY PROGRAM DISCOUNTING INCREASED LIFETIME EARNINGS AT 3 PERCENT

Subparts	Net program		Benefit (cost)	Subpart
	Pre-1940	1940–1959	1960–1977	
Single Family Insured Housing	$92	$10	($3)	($2)
HUD-Owned Single Family Housing w/ Appropriations	348	(246)	(550)	(116)
HUD-Owned Single Family Housing w/o Appropriations	102	20	7	48
Multifamily Insured Housing	119	34	9	26
Multifamily Housing w/ Project-Based Assistance	1,238	391	196	445
HUD-Owned Multifamily Housing w/ Appropriations	1,306	387	(133)	5
HUD-Owned Multifamily Housing w/o Appropriations	124	39	14	23
Single Family Rehab <5K	554	132	(72)	285
Single Family Rehab 5K–25K	749	27	(175)	336
Single Family Rehab >25K	1,468	279	(63)	1,356
Multifamily Rehab <5K	1,114	419	74	640
Multifamily Rehab 5K–25K	1,228	498	209	755
Multifamily Rehab >25K	1,845	804	354	1,178
Pre-1950 Single Family CPD Program	579	214	0	433
Pre-1950 Multifamily CPD Program	709	272	0	589
Post-1949 Single Family CPD Program	0	20	7	10
Post-1949 Multifamily CPD Program	0	39	14	20
Public Housing	1,354	455	247	378
Indian Housing	1,070	304	138	244
Pre-1950 Single Family Tenant-Based Assistance	5,287	2,216	0	4,409
Pre-1950 Multifamily Tenant-Based Assistance	5,335	2,239	0	4,450
Post-1949 Single Family Tenant-Based Assistance	0	344	132	181
Post-1949 Multifamily Tenant-Based Assistance	0	328	122	170

TABLE 9B.—NET BENEFIT (COST) PER UNIT BY PROGRAM DISCOUNTING INCREASED LIFETIME EARNINGS AT 7 PERCENT

Subparts	Net Program		Benefit (Cost)	Subpart
	Pre-1940	1940–1959	1960–1977	
Single Family Insured Housing	($43)	($42)	($23)	($24)
HUD-Owned Single Family Housing w/ Appropriations	(1,089)	(804)	(550)	(827)
HUD-Owned Single Family Housing w/o Appropriations	(33)	(32)	(13)	(26)
Multifamily Insured Housing	(4)	(13)	(8)	(8)
Multifamily Housing w/ Project-Based Assistance	(14)	(72)	(65)	(56)
HUD-Owned Multifamily Housing w/ Appropriations	(100)	(158)	(133)	(135)
HUD-Owned Multifamily Housing w/o Appropriations	1	(8)	(3)	(4)
Single Family Rehab <5K	(72)	(175)	(225)	(138)
Single Family Rehab 5K–25K	(511)	(534)	(441)	(519)
Single Family Rehab >25K	(428)	(601)	(488)	(914)
Multifamily Rehab <5K	57	(108)	(190)	(56)
Multifamily Rehab 5K–25K	(21)	(58)	(55)	(42)
Multifamily Rehab >25K	(40)	(70)	(69)	(57)
Pre-1950 Single Family CPD Program	(204)	(119)	0	(170)
Pre-1950 Multifamily CPD Program	(62)	(56)	0	(60)
Post-1949 Single Family CPD Program	0	(32)	(13)	(18)
Post-1949 Multifamily CPD Program	0	(8)	(3)	(4)
Public Housing	39	(31)	(27)	(27)
Indian Housing	(261)	(189)	(140)	(167)
Pre-1950 Single Family Tenant-Based Assistance	902	351	0	744
Pre-1950 Multifamily Tenant-Based Assistance	1,016	402	0	841
Post-1949 Single Family Tenant-Based Assistance	0	54	21	29
Post-1949 Multifamily Tenant-Based Assistance	0	66	26	35

Steady Blood Lead Levels. Phase I of the National Health and Nutrition Evaluation Survey (NHANES) III conducted from October 1988 to October 1991 revealed that average blood lead levels for children under six

had declined since NHANES II. If blood lead levels have continued to decline since Phase I, the benefit estimate would decline. The change in net benefits of the proposed rule associated with any continuing decline in blood lead levels is impossible to quantify because the magnitude of any such decline cannot be quantified from available data, and because there are no systematic data on any associated potential declines in lead-based paint hazards (which would reduce the costs of the proposed rule). It is probable that any continuing decline in blood lead levels would reflect a continuing decline in lead-based paint hazards (e.g. soil and dust lead levels). Therefore, hazard reduction costs could decline to an extent roughly proportionate to any decline in hazard reduction benefits.

Sensitivity of Lifetime Earnings and IQ to Blood Estimates. The monetized benefits of preventing elevated blood lead levels are almost entirely due to the benefits from increased lifetime earnings associated with the higher cognitive abilities of children who are prevented from being lead poisoned. Increased lifetime earnings are quantified by multiplying the amount of lifetime earnings lost per IQ point (EPA's $6,092 estimate using a 3 percent discount rate, or $1,400 using a 7 percent discount rate) by the average amount of IQ points lost per each one ug/dL increase in blood (Schwartz' .245 point estimate). Therefore, the analysis assumes that preventing a one ug/dL increase in a 1 year old child's blood lead level saves $1,493 or $343 in lifetime earnings. However, this benefit is sensitive both to the dollar estimate of lifetime earnings per IQ point lost (and that estimate's chosen discount rate) and to the estimate of IQ points lost per one ug/dL increase in blood lead levels. Similarly, more recent meta-analysis estimated .257 IQ points lost per one ug/dL increase in blood lead levels; estimated IQ losses were found to be .185 point per one ug/dL increase in populations that were socially disadvantaged and .289 point per one ug/dL increase in populations that were not disadvantaged. Substituting the .185 figure for the .245 figure would reduce the total benefits derived from increased lifetime earnings by 27 percent (because 0.185 is 73 percent of 0.245) to a net benefit of $712 million (using a 3 percent discount rate).

Threshold for Blood Lead to IQ Relationship. Another uncertainty about the blood lead to IQ relationship is whether it applies at relatively low and high blood lead levels. The available evidence does not indicate any apparent threshold but the data on children under five ug/dL is extremely limited. If the lifetime earnings benefit is not realized at these lower levels, then the benefits of the proposed rule would be substantially reduced. For example, the Regulatory Impact Analysis estimates the annual benefit of increased lifetime earnings from preventing blood levels above 5 ug/dL for children ages one and two to equal $19.5 billion, or an average of $198 per unit brought up to the proposed standard for lead dust (using a 3 percent discount rate).

Market Value for Paint Repair and Abatement. The market value of paint repair accounts for about 11 percent, or $175 million of the $1,080 million in net benefits associated with first year hazard reduction activities under the proposed rule. The first year costs of paint repair are shown to be approximately 43 percent of total first-year costs. If the cost-benefit analysis reflected no benefits for the market value of paint repair associated with first year activities, then the proposed rule would still yield net benefits of $905 million for first year activities.

The proposed rule only requires lead-based paint hazard abatement for rehabilitation exceeding $25,000 per unit, and for HUD-owned housing with sufficient appropriations. Therefore, assigning no market value to non-rehabilitation programs does not affect the lead-based paint hazard abatement costs of the proposed rule without appropriations. Applying the full cost of abatement for HUD-owned housing with appropriations without any market value for associated rehabilitation work would result in net costs for the HUD-Owned Single Family Housing and HUD-owned and Mortgagee-in-Possession Multifamily Housing Subparts of the proposed rule. The market value of rehabilitation work associated with abatement, however, would certainly increase the expected market value of HUD-owned property. Therefore, the full costs of abatement should be substantially offset by the increased resale value of these properties.

Hazard Education. The Regulatory Impact Analysis notes that many hazard reduction studies reflect some amount of lead hazard education for residents and that it has been difficult to separate the benefits of hazard reduction from the benefits of hazard education. The estimated duration of dust removal benefits assumes that the baseline includes increased resident education about lead hazards, which reduces the reaccumulation of lead dust.

3. Economic Impacts

The economic impact analysis of which entities will bear the cost of the proposed lead-based paint hazard evaluation and reduction requirements for HUD programs is discussed below.

Single Family Insurance. Those purchasing and/or selling a home with Federal Housing Administration mortgage insurance will bear the cost of lead-based paint hazard evaluation and reduction requirements for single family insurance programs. The visual inspection required by the proposed rule will be conducted during appraisals, which are typically paid for by the purchaser. Repair of deteriorated surfaces and cleanup of the worksite area are performed before endorsement or financed through an escrow account, which implies that the FHA could pass on the cost of repair and cleanup to the buyer through raising the price of insurance. Higher insurance prices resulting from the additional costs of lead-based paint hazard evaluation and control activities could lessen the competitiveness of FHA insurance compared to other mortgage insurers.

The average cost of the proposed rule for single family insurance is $192 per unit, but 85 percent of this full cost could be recovered by the market value of paint repair. Compared to the cost of mortgage insurance and closing costs for a mortgage, the additional cost of the proposed rule is negligible. The distribution of costs for lead-based paint hazard evaluation and reduction, however, creates more significant economic impacts for units that incur the highest possible combination of costs. This combination of unit costs is incurred by units that require both interior paint repair at a cost of $500 and exterior paint repair at a cost of $100. These units would also require cleanup of the affected work area at a cost of $75, plus $10 for the initial visual evaluation, for a total cost of $1,585.

Project-Based and Tenant-Based Rental Assistance. For multifamily project-based assistance programs, the proposed rule allows the owner to request a rent increase from HUD to pay for the costs of implementing an interim control plan. For tenant-based assistance programs, the proposed rule states that the owner is responsible for paint repair and cleanup, but it may be possible for owners to raise the contract rent to finance the cost of lead-based paint hazard evaluation and reduction. Although this option is not explicitly stated in the proposed rule, it is reasonable to expect that property owners will try to recover regulatory

costs, and income-based limits on tenant-paid rents under this program suggest that HUD would pay the cost of any rent increase. For the purpose of this analysis, it is assumed that HUD will directly or indirectly pay the incremental costs of the proposed rule for tenant-based assistance programs and for project-based assistance programs.

If HUD is directly or indirectly paying the costs of the proposed rule for rental assistance programs, then the economic impact for these programs can be measured in terms of the number of households or units that HUD would be unable to assist each year with the funds that are expended on lead-based paint hazard evaluation and reduction. The total annual incremental cost of the proposed rule for tenant- and project-based assistance programs is $77 million. The annual per-household cost of tenant-based assistance is less than $7,000 per unit. Therefore, with funds expended on lead-based paint hazard evaluation and reduction for project- and tenant-based assistance programs, HUD could provide rental assistance to more than 11,000 families. This represents less than 1 percent of the total number of households presently receiving tenant-based rental assistance.

Rehabilitation Programs. In the case of rehabilitation programs, there is no explicit acknowledgement in the proposed rule that HUD will finance the additional costs of lead-based paint hazard evaluation and reduction, which suggests that the recipients of federal funds are responsible for funding these activities. These recipients, however, are receiving HUD assistance for rehabilitation. Therefore, it is reasonable to assume that the costs of the proposed rule will reduce the amount of rehabilitation work that the recipients can finance. In this case, the economic impact of the proposed rule can be measured by determining the number of rehabilitation projects that would not be funded due to the recipients' inability to finance these additional costs. Dividing the total cost of the proposed rule for rehabilitation programs ($120 million) by an average cost of $15,000 per unit for rehabilitation work indicates that the proposed rule could cause a loss of financing for more than 8,000 units in need of rehabilitation each year.

Public and Indian Housing. The economic impact of the proposed rule on Public and Indian housing programs can be measured by the amount by which annual maintenance and repair services would be reduced for each unit. Based on the average incremental cost per unit of the proposed rule, public housing programs would have to reduce annual maintenance and repair expenses by $149 per unit. Indian programs would have to reduce such expenditures by $292 per unit.

4. Environmental Justice

President Clinton issued Executive Order 12898 and an accompanying Presidential memorandum to focus attention on the environmental and human health conditions in minority and low-income communities with the goal of achieving environmental justice. As part of HUD's efforts to incorporate environmental justice into its policies and programs, the Department has examined the impacts of the proposed rule on low-income populations and minority populations. The proposed rule promotes environmental justice in the following ways:

—Conducting lead-based paint evaluation and control activities in federally assisted housing will most significantly benefit low-income and minority populations because low-income and minority families are more likely to have children with elevated blood lead levels, and because low-income families are more likely to live in federally assisted housing.

—By offering a more consistent and streamlined approach to addressing lead-based paint hazards, the proposed rule increases the effectiveness of lead-based paint hazard evaluation and control to the benefit of low-income and minority populations.

—In developing the proposed rule, the Department provided ample opportunity for participation by the public, including low-income housing advocates and tenant representatives.

—Provisions within the proposed rule ensure that low-income and minority populations will have access to public information about lead-based paint hazards. First, the proposed rule requires that the lead hazard information pamphlet developed by the EPA be distributed to existing owner-occupants and tenants residing in dwelling units covered by the proposed rule. Forthcoming Section 1018 requirements to be established in 24 CFR part 38 will require new purchasers and new tenants of target housing to receive the EPA lead hazard information pamphlet. Second, the proposed rule requires that occupants of federally owned housing and federally assisted rental housing be provided written notice of risk assessments, paint inspections, or hazard reduction activities required by this regulation and undertaken at the property.

VIII. Other Matters

Public Reporting Burden

(a) In accordance with 5 CFR 1320.5(a)(1)(iv), the Department is setting forth the following concerning the proposed collection of information:

(1) Title of the information collection proposal: Requirements for Notification, Evaluation and Reduction of Lead-Based Paint Hazards in Federally Owned Residential Property and Housing Receiving Federal Assistance (FR–3482)

(2) Summary of the collection of information: EPA Lead Hazard Information Pamphlet, Notice of Evaluation/Hazard Reduction; Hazard Reduction Plan; Elevated Blood-Level (EBL) Reporting. These collections of information are new requirements and are necessary for HUD to comply with the Residential Lead-Based Paint Hazard Reduction Act of 1992. In the case of the EPA pamphlet, notice of hazard evaluation and reduction activities, and EBL reporting, the new requirements replace existing information collection requirements found in HUD's program regulations pertaining to lead-based paint. As with the other requirements of the proposed rule, HUD has tried to simplify the information collection requirements and minimize the burden to respondents.

(3) Description of the need for the information and its proposed use:

EPA Lead Hazard Information Pamphlet: Statutory requirement, to provide information on health risks associated with exposure to lead hazards and recommended methods for evaluating and reducing such hazards, and related information.

Notice of Evaluation/Hazard Reduction: Statutory requirement, to provide notice to tenants describing the nature, scope and results of any risk assessment, paint inspection, or hazard reduction activities undertaken.

Hazard Reduction Plan: Risk assessments are statutorily required in housing receiving project-based assistance, according to a schedule set forth in the proposed rule. If a risk assessment report identifies lead-based paint hazards, and the property owner requests a rent adjustment increase from HUD to pay for hazard reduction activities, a hazard reduction plan must be submitted for approval by HUD as part of the standard rent adjustment increase request.

Elevated Blood Level (EBL) Reporting: The rule requires evaluation and reduction of lead-based paint hazards when an EBL child is identified in the covered properties in which HUD maintains a continuing relationship with the recipients of Federal housing

assistance, or that is owned and to be sold by HUD and in which an EBL child resides. The reporting requirement states that the name and address of an EBL child shall be reported to the State or local health agency to ensure coordination between housing and health agencies. The reporting requirements currently exists in some HUD programs (e.g. Section 8 tenant-based rental assistance).

(4) Description of the likely respondents, including the estimated number of likely respondents, and proposed frequency of response to the collection of information: Residential property owners and public housing agencies receiving Federal housing assistance; Federal grantees; any Federal agency that sells a pre-1978 residential property that is owned by the agency. Additional information on the numbers of respondents and frequency of responses is given in the next paragraph.

(5) Estimate of the total reporting and recordkeeping burden that will result from the collection of information:

REQUIREMENTS FOR NOTIFICATION, EVALUATION, AND REDUCTION OF LEAD-BASED PAINT HAZARDS IN FEDERALLY OWNED RESIDENTIAL PROPERTY AND HOUSING RECEIVING FEDERAL ASSISTANCE (FR–3482)

[Information collection requirement: Annual cost and hour burden]

Type of collection	Proposed section of 24 CFR affected	Number of respondents	Frequency of response	Hour burden	Annual cost
Lead Pamphlet	36.62 36.144 36.162 36.230 36.256 36.274 36.294	1,096,367	1	36,546	$825,934.00
Notice of Evaluation/Hazard Reduction	36.64 36.164 36.232 36.276	1,024,050	1	47,569	567,689.00
Hazard Reduction Plan	36.168	360	1	2,340	32,292.00
EBL Reporting	36.170 36.188 36.208 36.284 36.302	2,005	1	13,783	173,851.00
Total		2,122,782	1	100,238	1,599,766.00

(b) In accordance with 5 CFR 1320.8(d)(1), the Department is soliciting comments from members of the public and affected agencies concerning the proposed collection of information to:

(1) Evaluate whether the proposed collection of information is necessary for the proper performance of the functions of the agency, including whether the information will have practical utility;

(2) Evaluate the accuracy of the agency's estimate of the burden of the proposed collection of information;

(3) Enhance the quality, utility, and clarity of the information to be collected; and

(4) Minimize the burden of the collection of information on those who are to respond; including through the use of appropriate automated collection techniques or other forms of information technology, e.g., permitting electronic submission of responses.

Interested persons are invited to submit comments regarding the information collection requirements in this proposal. Under the provisions of 5 CFR part 1320, OMB is required to make a decision concerning this collection of information between 30 and 60 days after today's publication date. Therefore, a comment on the information collection requirements is best assured of having its full effect if OMB receives the comment within 30 days of today's publication. This time frame does not affect the deadline for comments to the agency on the proposed rule, however. Comments must refer to the proposal by name and docket number (FR–3482) and must be sent to:

Joseph F. Lackey, Jr., HUD Desk Officer, Office of Management and Budget, New Executive Office Building, Washington, DC 20503

and

Reports Liaison Officer, Office of the Lead-Based Paint Abatement and Poisoning Prevention, Department of Housing & Urban Development, 451—7th Street, SW., Room B–133, Washington, DC 20410.

The information collection requirements contained in this rule have been submitted to the Office of Management and Budget under the Paperwork Reduction Act of 1995 (44 U.S.C. 3501–3520). The Department has determined that the following provisions contain information collection requirements.

Regulatory Flexibility Act

The Secretary, in accordance with the Regulatory Flexibility Act (5 U.S.C. 605(b)), has reviewed this proposed rule before publication and by approving it certifies that this proposed rule does not have a significant economic impact on a substantial number of small entities, other than those impacts specifically required to be applied universally by the statute. The requirements of the proposed rule are applicable only to a limited and specifically defined portion of the nation's housing stock. To the extent that the requirements affect small entities, the impact is generally discussed in the economic analysis that accompanies the proposed rule.

Environmental Impact

A Finding of No Significant Impact with respect to the environment was made in accordance with HUD regulations in 24 CFR part 50 that implement section 102(2)(C) of the

National Environmental Policy Act of 1969 (42 U.S.C. 4332). This Finding is available for public inspection between 7:30 a.m. and 5:30 p.m. weekdays in the Office of the Rules Docket Clerk, Office of General Counsel, Room 10276, Department of Housing and Urban Development, 451 Seventh Street, SW., Washington, DC.

Executive Order 12866

Consistent with Executive Order 12866 and President Clinton's memorandum of March 4, 1995, to all Federal Departments and Agencies on the subject of Regulatory Reinvention, the Department is reviewing all of its regulations to determine which regulations can be eliminated, streamlined, or consolidated with other regulations. As part of this review, at the final rule stage this proposed rule will undergo revisions in accordance with the President's regulatory reform initiatives. In addition to comments on the substance of this proposed rule, the Department welcomes comments on how this proposed rule may be made more understandable and less burdensome in its final form.

OMB reviewed this proposed rule under Executive Order 12866, Regulatory Planning and Review. Any changes made to the proposed rule as a result of that review are identified in the docket file, which is available for public inspection at the Office of the Rules Docket Clerk, Office of General Counsel, Room 10276, Department of Housing and Urban Development, 451 Seventh Street, SW., Washington, DC 20410–0500. The Regulatory Impact Analysis performed on this proposed rule is also available for public inspection between 7:30 a.m. and 5:30 p.m. weekdays at the Office of the Rules Docket Clerk.

Executive Order 12612, Federalism

The General Counsel, as the Designated Official under Section 6(a) of Executive Order 12612, *Federalism,* has determined that the policies contained in this proposed rule will not have substantial direct effects on States or their political subdivisions, or the relationship between the Federal government and the States, or on the distribution of power and responsibilities among the various levels of government. As a result, the proposed rule is not subject to review under the Order. Promulgation of this proposed rule expands coverage of the applicable regulatory requirements pursuant to statutory direction.

Executive Order 12606, the Family

The General Counsel, as the Designated Official under Executive Order 12606, *The Family,* has determined that this proposed rule does not have potential for significant impact on family formation, maintenance, and general well-being, and, thus, is not subject to review under the order. No significant change in existing HUD policies or programs will result from promulgation of this proposed rule, as those policies and programs relate to family concerns.

List of Subjects

24 CFR Part 36

Grant programs—housing and community development, Lead poisoning, Mortgage insurance, Rent subsidies, Reporting and recordkeeping requirements.

24 CFR Part 37

Grant programs—housing and community development, Lead poisoning, Mortgage insurance, Rent subsidies, Reporting and recordkeeping requirements.

Accordingly, title 24 of the Code of Federal Regulations, is proposed to be amended by removing part 35, consisting of subparts A through G, and by adding part 36, consisting of subparts A through O, and by adding part 37, consisting of subparts A through J, as follows:

PART 35—LEAD-BASED PAINT POISONING PREVENTION IN CERTAIN RESIDENTIAL STRUCTURES [REMOVED]

PART 36—EVALUATION AND REDUCTION OF LEAD-BASED PAINT HAZARDS IN FEDERALLY OWNED RESIDENTIAL PROPERTY AND HOUSING RECEIVING FEDERAL ASSISTANCE

Subpart A—General Requirements

Sec.
36.1 Purpose and applicability.
36.2 Exemptions.
36.3 Assumption of lead-based paint or lead-based paint hazards or both.
36.4 Delay of evaluation, paint repair and hazard reduction activities on exterior surfaces.
36.6 Prohibition against the use of paint containing lead in federally owned housing and housing receiving Federal assistance.
36.8 Prohibited methods of paint removal.
36.10 Compliance with Federal laws and authorities.
36.12 Compliance with local codes and regulations.
36.13 Minimum requirements.
36.14 Waivers.
36.15 Noncompliance with the requirements of this part 36 and part 37.
36.16 Definitions.

Subpart B—State Procedures

36.20 Purpose and applicability.
36.22 General eligibility criteria.
36.24 General procedures.
36.26 Specific procedures.

Subpart C—Disposition of Residential Property Owned by Federal Agencies Other Than HUD

36.40 Purpose and applicability.
36.42 Exemption.
36.44 Disposition of residential property constructed before 1960.
36.46 Disposition of residential property constructed after 1959 and before 1978.
36.48 Other required practices.

Subpart D—Project-Based Assistance Provided by a Federal Agency Other Than HUD

36.60 Purpose and applicability.
36.62 Lead hazard information pamphlet.
36.64 Notice of evaluation, paint repair and hazard reduction activities.
36.66 Risk assessments.
36.68 Hazard reduction.
36.70 EBL child.
36.72 Other required practices.

Subpart E—Single Family Insured Property

36.80 Purpose and applicability.
36.82 Exemptions.
36.84 Lead hazard information pamphlet.
36.86 Visual evaluation of painted surfaces.
36.88 Paint repair and cleanup.

Subpart F—Disposition of HUD-Owned Single Family Property (With Sufficient Appropriations)

36.100 Purpose and applicability.
36.102 Exemptions.
36.104 Disposition of single family property constructed before 1960.
36.106 Disposition of single family property constructed after 1959 and before 1978.
36.108 Other required practices.

Subpart G—Disposition of HUD-Owned Single Family Property (Without Sufficient Appropriations)

36.120 Purpose and applicability.
36.122 Exemptions.
36.124 Visual evaluation of painted surfaces.
36.126 Paint repair and cleanup.
36.128 Monitoring.

Subpart H—Multifamily Insured Property

36.140 Purpose and applicability.
36.142 Exemptions.
36.144 Lead hazard information pamphlet.
36.146 Visual evaluation of painted surfaces.
36.148 Paint repair and cleanup.

Subpart I—Project-Based Assistance

36.160 Purpose and applicability.
36.162 Lead hazard information pamphlet.
36.164 Notice of evaluation, paint repair and hazard reduction activities.
36.166 Risk assessments.
36.168 Hazard reduction plan.
36.169 Hazard reduction.
36.170 EBL child.
36.172 Other required practices.

Subpart J—Disposition of HUD-Owned and Mortgagee-in-Possession Multifamily Property (With Sufficient Appropriations)

36.180 Purpose and applicability.
36.182 Exemption.
36.184 Disposition of multifamily property constructed before 1960.
36.186 Disposition of multifamily property constructed after 1959 and before 1978.
36.188 EBL child.
36.190 Other required practices.

Subpart K—Disposition of HUD-Owned and Mortgagee-in-Possession Multifamily Property (Without Sufficient Appropriations)

36.200 Purpose and applicability.
36.202 Exemptions.
36.204 Visual evaluation of painted surfaces.
36.206 Paint repair and cleanup.
36.208 EBL child.
36.210 Monitoring.

Subpart L—Rehabilitation

36.220 Purpose and applicability.
36.222 Definitions.
36.224 Exemptions.
36.226 Rehabilitation costs.
36.228 Calculating rehabilitation costs for the Flexible Subsidy-CILP program.
36.229 Determining evaluation, paint repair and hazard reduction requirements.
36.230 Lead hazard information pamphlet.
36.232 Notice of evaluation, paint repair and hazard reduction activities.
36.234 Residential property receiving an average of less than $5,000 per unit in Federal rehabilitation assistance.
36.236 Residential property receiving an average of $5,000 or more and $25,000 or less per unit in Federal rehabilitation assistance.
36.238 Residential property receiving an average of more than $25,000 per unit in Federal rehabilitation assistance.
36.240 Other required practices.

Subpart M—Community Planning and Development (CPD) Non-Rehabilitation Programs

36.250 Purpose and applicability.
36.252 Definitions—subrecipient.
36.254 Exemption—limited paint inspection.
36.256 Lead hazard information pamphlet.
36.258 Residential property constructed before 1950.
36.260 Residential property constructed after 1949 and before 1978.
36.262 Tenant-based rental assistance.

Subpart N—Public and Indian Housing Programs

36.270 Purpose and applicability.
36.272 Definitions—Public or Indian housing project.
36.274 Lead hazard information pamphlet.
36.276 Notices of evaluation and reduction of lead-based paint and lead-based paint hazards.
36.278 Evaluation.
36.280 Interim controls.
36.282 Abatement.
36.284 EBL child.
36.286 Other required practices.

Subpart O—Tenant-Based Rental Assistance

36.290 Purpose and applicability.
36.292 Exemptions.
36.294 Lead hazard information pamphlet.
36.296 Residential property constructed before 1950; initial inspections.
36.298 Residential property constructed before 1950; periodic inspections.
36.300 Residential property constructed after 1949 and before 1978; initial and periodic inspections.
36.302 EBL child.

Authority: 42 U.S.C. 3535(d) and 4822.

Subpart A—General Requirements

§ 36.1 Purpose and applicability.

(a) The requirements of this part are promulgated to implement the Lead-Based Paint Poisoning Prevention Act (42 U.S.C. 4822 *et seq.*).

(b) Subpart A of this part applies to all federally owned residential properties and housing receiving Federal assistance that is covered under this part.

§ 36.2 Exemptions.

(a) This part does not apply to the following:

(1) A residential property for which construction was completed on or after January 1, 1978;

(2) A single room occupancy (SRO) dwelling unit;

(3) Housing for the elderly or a residential property designated exclusively for persons with disabilities, except that if a child who is less than 6 years of age resides or is expected to reside (the Department interprets this phrase to include a pregnant woman), the relevant requirements of this part shall apply.

(b) A residential property undergoing emergency repairs in response to a natural disaster is exempt from the relevant evaluation and reduction requirements of this part that apply to the property.

(c) The requirements of visual evaluation, paint repair and cleanup do not apply for a dwelling unit if documentation is provided that a paint inspection has been completed in accordance with part 37, subpart C, of this subtitle and indicates the absence of lead-based paint in the dwelling unit (i.e. lead-free). Results of additional test(s) by a certified paint inspector may be used to confirm or refute a prior finding.

§ 36.3 Assumption of lead-based paint or lead-based paint hazards or both.

In subparts where interim controls or abatement are required, the presence of lead-based paint or lead-based paint hazards or both may be assumed throughout the residential property. If lead-based paint or lead-based paint hazards or both are assumed, paint inspection or risk assessment is not required. The requirements for interim controls or abatement or both must then be conducted in accordance with part 37, subparts E and F, of this subtitle. Interim controls and abatement are completed when cleanup and clearance are achieved in accordance with part 37, subparts H and I, of this subtitle.

§ 36.4 Delay of evaluation, paint repair and hazard reduction activities on exterior surfaces.

Performance of an evaluation, paint repair, lead-based paint hazard reduction, or abatement of lead-based paint on an exterior painted surface as required under this part may be delayed for a reasonable time when weather conditions are unsuitable for conventional construction activities.

§ 36.6 Prohibition against the use of paint containing lead in federally owned housing and housing receiving Federal assistance.

The use of paint containing more than 0.06 percent by weight of lead on any interior or exterior surface in federally owned housing or housing receiving Federal assistance is prohibited. Where appropriate, each Federal agency shall include the prohibition in contracts, grants, cooperative agreements, insurance agreements, guaranty agreements, trust agreements, or other similar documents.

§ 36.8 Prohibited methods of paint removal.

The following methods of paint removal may not be used to remove lead-based paint:

(a) Open flame burning or torching;

(b) Machine sanding or grinding without a high-efficiency particulate air (HEPA) exhaust control;

(c) Uncontained hydroblasting or high pressure wash;

(d) Abrasive blasting or sandblasting without HEPA exhaust control;

(e) Heat guns operating above 1100 degrees Fahrenheit;

(f) Chemical paint strippers containing methylene chloride; or

(g) Dry scraping or dry sanding, except scraping in conjunction with heat guns or around electrical outlets or when treating defective paint spots totalling no more than 2 square feet in any one interior room or space, or totalling no more than 20 square feet on exterior surfaces.

§ 36.10 Compliance with Federal laws and authorities.

All lead-based paint activities required in this part must be performed

in accordance with applicable Federal laws and authorities. Further, such activities are subject to the applicable environmental review requirements of the National Environmental Policy Act of 1969 (42 U.S.C. 4321 *et seq.*) and other environmental laws and authorities (See, *e.g.*, laws and authorities listed in § 50.4 of this subtitle).

§ 36.12 Compliance with local codes and regulations.

Nothing in this part is intended to relieve an owner or tenant of federally owned housing or housing receiving Federal assistance from any responsibility for compliance with State or local laws, ordinances, codes, or regulations governing lead-based paint. With respect to housing receiving Federal assistance, HUD does not assume any responsibility for ensuring compliance with such State or local requirements.

§ 36.13 Minimum requirements.

This part sets out the Department's minimum requirements for the evaluation and reduction of lead-based paint and lead-based paint hazards in federally owned housing and housing receiving Federal assistance. Nothing in this part is intended to preclude an owner or tenant of such housing from conducting additional evaluation and reduction measures. For example, if the Department requires interim controls, an owner or tenant may choose to implement abatement.

§ 36.14 Waivers.

(a) On a case-by-case basis and upon determination of good cause, the Secretary may, subject to statutory limitations, waive any provision of this part.

(b) In the case of jurisdictions which banned the sale or use of lead-based paint prior to 1978, the Secretary may designate an earlier date for certain provisions of this part.

§ 36.15 Noncompliance with the requirements of this part and part 37.

A property owner who informs a potential purchaser or tenant of possible lead-based paint hazards in the dwelling unit is not relieved of the requirements to evaluate and reduce lead-based paint or lead-based paint hazards in accordance with this part and part 37 of this subtitle. Further, noncompliance with any of these requirements by a recipient of Federal housing assistance (*e.g.*, owner, grantee or public or Indian housing agency) may result in sanctions by the Department corresponding to the type of assistance provided, or enforcement of these requirements by any other means authorized by law.

§ 36.16 Definitions.

Abatement means any set of measures designed to permanently eliminate lead-based paint or lead-based paint hazards. For the purposes of this definition, permanent means at least 20 years effective life. Abatement includes:

(1) The removal of lead-based paint and lead-contaminated dust, the permanent enclosure or encapsulation of lead-based paint, the replacement of components or fixtures painted with lead-based paint, and the removal or permanent covering of lead-contaminated soil; and

(2) All preparation, cleanup, disposal, and post abatement clearance testing activities associated with such measures.

Accessible (chewable) surface means an interior or exterior surface painted with lead-based paint that a young child can mouth or chew.

Act means the Lead-Based Paint Poisoning Prevention Act, 42 U.S.C. 4822 *et seq.*

Bare soil means soil not covered by grass, sod, or other live ground covers, or by wood chips, gravel, artificial turf, or similar covering. Bare soil includes sand.

Certified contractor means a risk assessor, inspector, or abatement supervisor who has been certified in accordance with 40 CFR 745.226.

Clearance examination means an activity conducted and a laboratory analysis by a clearance examiner after completion of lead-based paint hazard reduction activities to determine that the hazard controls are complete and that levels of lead in settled dust or bare soil or both meet the standards established in part 37, subpart I, of this subtitle. The clearance process includes a visual evaluation and collection of environmental samples.

Common area means a portion of a residential property (except in a condominium project) generally accessible to occupants of all dwelling units. Such an area may include, but is not limited to, hallways, stairways, laundry and recreational rooms, playgrounds, community centers, on-site day care facilities, garages and boundary fences.

Component means an element of a dwelling unit or common area identified by type and location, such as a bedroom wall, an exterior window sill, a baseboard in a living room, a kitchen floor, an interior window sill in a bathroom, a porch floor, stair treads in a common stairwell, or an exterior wall.

Composite sampling means the collection of more than one sample of the same medium (e.g. dust, soil or paint) for analysis as one sample.

Containment means the physical measures taken to ensure that dust and debris created or released during paint repair or lead-based paint hazard reduction are not spread, blown or tracked from inside to outside of the worksite.

Department means the United States Department of Housing and Urban Development (HUD).

Deteriorated paint means any interior or exterior applied paint that is peeling, chipping, chalking or cracking or any paint located on an interior or exterior surface or fixture that is otherwise damaged or separated from the substrate.

Dry sanding means sanding by machine or by hand without moisture.

Dwelling unit means a house or an apartment, occupied or intended for occupancy, including attached structures such as balconies, porches or stoops.

Elevated blood lead level (EBL) (requiring the evaluation of lead hazards) means an excessive absorption of lead that is a confirmed concentration of lead in whole blood of 20 ug/dl (micrograms of lead per deciliter of whole blood) for a single venous test or of 15–19 ug/dl in two consecutive venous tests taken 3 to 4 months apart.

Emergency repair means a single-purpose activity that must be performed immediately to maintain the integrity and habitability of a residential property. Examples include repair of roof damage or of utility or mechanical equipment.

Encapsulation means the application of any covering or coating that acts as a barrier between the lead-based paint and the environment and that relies, for its durability, on adhesion between the encapsulant and the painted surface, and on the integrity of the existing bonds between paint layers, and between the paint and the substrate.

Enclosure means the use of rigid, durable construction materials that are mechanically fastened to the substrate in order to act as a barrier between the lead-based paint and the environment.

Evaluation means visual evaluation, risk assessment, paint inspection, or a combination of risk assessment and paint inspection to determine the presence of deteriorated paint, a lead-based paint hazard or lead-based paint.

Federal agency means the United States or any executive department, independent establishment, administrative agency and instrumentality of the United States,

including a corporation in which all or a substantial amount of the stock is beneficially owned by the United States or by any of the entities mentioned above. The term ''Federal agency'' includes, but is not limited to, HUD, Rural Housing and Community Development Service (formerly Farmer's Home Administration), Resolution Trust Corporation, General Services Administration, Department of Defense, Department of Veterans Affairs, Department of the Interior and Department of Transportation.

Federally owned property means residential property owned or managed by a Federal agency, or for which a Federal agency is a trustee or conservator.

Friction surface means an interior or exterior surface that is subject to abrasion or friction including, but not limited to, certain window, floor, and stair surfaces.

Grantee means any State or local government, Indian tribe or insular area that has been designated by HUD to administer Federal housing assistance under a program covered by part 36, subparts B, L or M, except the HOME program or the Flexible Subsidy-Capital Improvement Loan Program (CILP).

Hazard reduction means measures designed to reduce or eliminate human exposure to lead-based paint hazards through interim controls and abatement.

HEPA vacuum means a vacuum with an attached high-efficiency particulate air (HEPA) filter capable of removing particles of 0.3 microns or larger from air at 99.97 percent efficiency.

Housing for the elderly means retirement communities or similar types of housing reserved for households composed of one or more persons 62 years of age or more at the time of initial occupancy.

Housing receiving Federal assistance means housing which is covered by an application for mortgage insurance or housing assistance payments under a program administered by the Secretary, or otherwise receives more than $5,000 in project-based assistance under a Federal housing program.

HUD-owned property means residential property to which HUD acquired title, or any federally owned residential property for which HUD has disposition responsibility.

Impact surface means an interior or exterior surface that is subject to damage by repeated sudden force, such as certain parts of door frames.

Indian tribes means any Indian tribe, band, group or nation, including Alaskan Indians, Aleuts and Eskimos, and any Alaskan Native Village of the United States that is considered an eligible recipient under Title I of the Indian Self-Determination and Education Assistance Act (25 U.S.C. 450), or was considered an eligible recipient under the State and Local Fiscal Assistance Act of 1972 (31 U.S.C. 1221) before repeal of that Act. Eligible recipients are determined by the Bureau of Indian Affairs.

Inspection (*See* Paint inspection)

Insular areas means Guam, the Northern Mariana Islands, the United States Virgin Islands and American Samoa.

Interim controls means a set of measures designed to reduce temporarily human exposure or likely exposure to lead-based paint hazards. Interim controls include repairs, maintenance, painting, temporary containment, specialized cleaning, ongoing monitoring of lead-based paint hazards or potential hazards, and the establishment and operation of management and resident education programs.

Interior window sill means the portion of the horizontal window ledge that usually protrudes into the interior of the room, adjacent to the window sash when closed; often called the window stool.

Lead-based paint means paint or other surface coatings that contain lead equal to or exceeding 1.0 milligram per square centimeter, or 0.5 percent by weight or 5,000 parts per million (ppm), or another level that may be established by the Secretary.

Lead-based paint hazard means any condition that causes exposure to lead from lead-contaminated dust, lead-contaminated soil, or lead-contaminated paint that is deteriorated or present in accessible surfaces, friction surfaces, or impact surfaces, and that would result in adverse human health effects.

Lead-contaminated dust means surface dust that contains an amount of lead exceeding the following levels, which may pose a threat of adverse health effects in pregnant women or children of less than 6 years of age:

(1) Hard floors—100 ug/ft^2;

(2) Carpeted floors—100 ug/ft^2; and

(3) Interior window sills—500 ug/ft^2.

Lead-contaminated soil means bare soil on residential property that contains lead exceeding the following levels, which may pose a threat of adverse health effects in pregnant women or children of less than 6 years of age:

(1) Children's play area—400 ug/g (micrograms per gram); and

(2) All other areas—2,000 ug/g.

Limited paint inspection means a paint inspection of only deteriorated paint surfaces or those painted surfaces likely to be disturbed or replaced during rehabilitation activities.

Multifamily property means a residence containing dwelling units for five or more families.

Occupant means a person who inhabits a dwelling unit.

Owner means a person, firm, corporation, guardian, conservator, receiver, trustee, executor, or other judicial officer who, alone or with others, owns, holds, or controls the freehold or leasehold title or part of the title to property, with or without actually possessing it. The definition includes a vendee who possesses the title, but does not include a mortgagee or an owner of a reversionary interest under a ground rent lease.

Paint inspection means a surface-by-surface investigation of all intact and nonintact interior and exterior painted surfaces for lead-based paint using an approved x-ray fluorescence analyzer, atomic absorption spectroscopy, or comparable approved sampling or testing technique, and includes the provision of a report explaining the results of the investigation.

Paint removal means a method of abatement that entails removing lead-based paint from surfaces.

Painted surface to be disturbed means paint that is scraped, sanded, cut, penetrated or otherwise affected by rehabilitation work in a manner that could potentially create a lead-based paint hazard by generating dust, fumes, paint chips, or exposed surfaces.

Participating jurisdiction means any State or local government, Indian tribe or insular area that has been designated by HUD to administer a HOME program.

Project-based assistance means Federal assistance that is tied to a residential property with a specific location and remains with that particular location throughout the term of the assistance.

Protective covering means a durable material, such as polyethylene or its equivalent, which protects from lead-contaminated dust, debris or abrasion.

Random sample means a sample drawn from a population (e.g. housing units in a multifamily property) so that each member of the population has an equal chance to be drawn.

Recognized laboratory means any environmental laboratory recognized by EPA under the National Lead Laboratory Accreditation Program as being capable of performing an analysis for lead compounds in paint, soil or dust.

Rehabilitation means the improvement of an existing structure through alterations, incidental additions or enhancements. Rehabilitation includes repairs necessary to correct the

results of deferred maintenance, the replacement of principal fixtures and components, improvements to increase the efficient use of energy, and installation of security devices.

Replacement means a strategy of abatement that entails the removal of building components that have surfaces coated with lead-based paint such as windows, doors, and trim, and the installation of new components free of lead-based paint.

Residential property means a dwelling unit, common areas and any surrounding land belonging to an owner and accessible to occupants.

Risk assessment means an on-site investigation to determine and report the existence, nature, severity, and location of lead-based paint hazards in residential properties, including:

(1) Information gathered on the age and history of the housing and occupancy by children under age 6;

(2) Visual assessment;

(3) Limited wipe sampling or other environmental sampling techniques;

(4) Identification of hazard reduction options; and

(5) Provision of a report explaining the results of the investigation.

Room equivalent means an identifiable part of a residence such as a room, a house exterior side or area, a hallway, stairway or a playground, identified for the purpose of conducting a paint inspection.

Secretary means the Secretary of the U.S. Department of Housing and Urban Development.

Similar dwelling units means dwelling units that were built at the same time, have a common maintenance and management history, have a common painting history, and are of similar construction.

Single family property means a residence containing dwelling units for one to four families.

Single room occupancy (SRO) means a 0-bedroom dwelling unit for occupancy by a single individual which may contain food preparation or sanitary facilities or both, and is located within a residential property.

Single-surface sampling means the collection of one sample from each sampling location or individual component with the intention that each sample will be analyzed individually.

Substrate means the material directly beneath the painted surface out of which the components are constructed, including wood, drywall, plaster, concrete, brick or metal.

Targeted sample means a sample of dwelling units selected from a multifamily property using information supplied by the owner. The units are selected to have the greatest probability of having lead-based paint hazards.

Tenant means the individual named on a lease or rental agreement to lease or rent a dwelling unit.

Visual evaluation means to look at interior and exterior painted surfaces for signs of deterioration.

Wet sanding or scraping means a process of removing loose paint in which both the surface to be scraped or sanded and the scraping or sanding tool are kept wet with water to minimize the dispersal of paint chips and airborne dust.

Window sill means the portion of the horizontal window ledge that protrudes into the interior of the room, adjacent to the window sash when the window is closed. The window sill is sometimes referred to as the window stool.

Window trough means the area between the interior window sill (stool) and the storm window frame. If there is no storm window, the window trough is the area that receives both the upper and lower window sashes when they are both lowered. The window trough is sometimes referred to as the window well.

Window well (*See* Window trough)

Worksite means an interior or exterior area where paint repair or a lead-based paint hazard reduction activity takes place. There may be more than one worksite in a dwelling unit or at a residential property.

XRF reading means the measurement of lead levels in paint with a portable X-ray fluorescence (XRF) instrument. The measurement is always in mg/cm^2 (milligrams per square centimeter).

Subpart B—State Procedures

§ 36.20 Purpose and applicability.

The purpose of this subpart B is to allow States, Indian tribes and insular areas to establish alternative procedures to those required under subparts L and M of this part, to eliminate as far as practicable lead-based paint hazards in housing receiving Federal assistance, or operating a Federal housing assistance program, established by the Secretary. A State, Indian tribe or insular area shall meet the general eligibility criteria set out in § 36.22.

§ 36.22 General eligibility criteria.

(a) A State, Indian tribe or insular area shall have in place a certification program for individuals and firms engaged in lead-based paint activities that is approved by EPA pursuant to sections 402 and 404 of Title IV of the Toxic Substances Control Act (TSCA), (15 U.S.C. 2682 and 2684).

(b) A State, Indian tribe or insular area shall have in place written evaluation and hazard reduction procedures that have been approved by the Secretary prior to implementation of authority under this subpart, and when such procedures are substantially altered by such entity.

(c) A unit of general local government located in a State that has HUD-approved alternate procedures in accordance with this section may adopt those State procedures for all or part of the programs assisted under subparts L and M of this part.

§ 36.24 General procedures.

Alternative lead-based paint hazard evaluation and reduction procedures developed by a State, Indian tribe or insular area must include the following minimum requirements:

(a) *Lead hazard information pamphlet.* The State, Indian tribe or insular area shall ensure that the lead hazard information pamphlet developed by the Environmental Protection Agency, pursuant to section 406(a) of the Toxic Substances Control Act, 15 U.S.C. 2686 is provided to the tenant, owner-occupant or purchaser of housing receiving Federal assistance under this subpart.

(b) *Notice of evaluation, paint repair and hazard reduction activities.* In cases where evaluation, paint repair or hazard reduction activities are undertaken, each owner shall provide a notice to tenants. The notice must include:

(1) A summary of the nature, scope and results of the evaluation, paint repair or hazard reduction activities;

(2) Information on how to obtain access to the actual evaluation report; and

(3) Available information on the location of any remaining lead-based paint on a surface-by-surface basis after conducting hazard reduction.

(c) *Occupant protection.* Occupants may not be permitted to enter the interior worksite during lead-based paint hazard reduction activities or paint repair. Occupant re-entry into the worksite is permitted only after the hazard reduction work is completed and clearance has been achieved, or after paint repair and cleanup are completed.

§ 36.26 Specific procedures.

The specific procedures for reducing lead-based paint hazards in housing covered under this subpart B are to be developed at the discretion of the State, Indian tribe or insular area, but must include the following minimum requirements:

(a) *Clearance standards.* When clearance is required under paragraph (b) of this section the following standards shall apply:

(1) *Dust testing.* Levels of lead in dust wipe samples may not exceed the following standards:

(i) Hard floors—100 ug/ft^2;

(ii) Carpeted floors—100 ug/ft^2;

(iii) Interior window sills—500 ug/ft^2.

(2) *Soil testing.* Lead levels in samples of bare soil may not exceed the following standards:

(i) Children's play area—400 ug/g (micrograms per gram);

(ii) All other areas—2,000 ug/g.

(3) *Visual evaluation.* A visual evaluation of all painted surfaces in order to identify deteriorated paint.

(b) *Rehabilitation.* A grantee or participating jurisdiction receiving HUD rehabilitation funds for a residential property constructed before 1978 shall require the following:

(1) *Housing receiving an average of $25,000 or less per unit in HUD funds for rehabilitation.* (i) A paint inspection of each surface to be disturbed by rehabilitation or which may be replaced during rehabilitation.

(ii) A risk assessment in the units receiving HUD rehabilitation assistance and in associated common areas and exterior surfaces.

(iii) Hazard reduction activities to reduce identified lead-based paint hazards must be conducted under the supervision of a certified abatement contractor. Hazard reduction is completed when the clearance standards set out in paragraph (a) of this section are achieved.

(iv) States may adopt less stringent procedures for addressing potential lead-based paint hazards when the average amount of HUD funds for rehabilitation is less than $5,000 per unit.

(2) *Housing receiving an average of more than $25,000 per unit in HUD funds for rehabilitation.* (i) A paint inspection of each surface to be disturbed by rehabilitation or which may be replaced during rehabilitation.

(ii) A risk assessment in the units receiving HUD rehabilitation assistance and in associated common areas and exterior surfaces.

(iii) Abatement of identified lead-based paint hazards must be conducted in the course of rehabilitation. Abatement is completed when the clearance standards set out in paragraph (a) of this section are achieved.

(c) *CPD non-rehabilitation programs.* A grantee or participating jurisdiction receiving Federal assistance under a HUD program described in subpart M of this part for a residential property constructed before 1978 shall require the following:

(1) *Housing constructed before 1950.* (i) Dust testing;

(ii) Paint repair of deteriorated paint and cleanup of the worksite; and

(iii) Cleanup of surfaces with high levels of leaded dust, if dust samples above the standards set out in paragraph (a)(1) of this section are identified.

(2) *Housing constructed after 1949 and before 1978.* Paint repair of deteriorated paint and cleanup of the worksite.

Subpart C—Disposition of Residential Property Owned by Federal Agencies Other Than HUD

§ 36.40 Purpose and applicability.

The purpose of this subpart C is to establish procedures to eliminate as far as practicable lead-based paint hazards prior to the disposition (*i.e.* sale) of a residential property that is owned by a Federal agency other than HUD.

§ 36.42 Exemption.

In the absence of appropriations sufficient to cover the costs of §§ 36.44, 36.46 and 36.48 these requirements shall not apply to the Federal agency.

§ 36.44 Disposition of residential property constructed before 1960.

(a) *Hazard evaluation.* The Federal agency shall conduct a risk assessment and a paint inspection in accordance with part 37, subparts B and C, of this subtitle. Hazard evaluation must be completed according to a schedule determined by the Federal agency.

(b) *Abatement of lead-based paint hazards.* The Federal agency shall conduct abatement of all identified lead-based paint hazards in accordance with part 37, subpart F, of this subtitle. Abatement is completed when cleanup and clearance are achieved in accordance with part 37, subparts H and I, of this subtitle. In the case of a sale to a non-owner occupant purchaser, abatement may be made a condition of sale with sufficient funds escrowed.

§ 36.46 Disposition of residential property constructed after 1959 and before 1978.

(a) *Exemption.* The Secretary may waive the paint inspection and risk assessment requirements of this section if documentation is provided to the Secretary by the Federal agency that a risk assessment, performed by a certified risk assessor, shows the absence of lead-based paint hazards, or that a paint inspection, performed by a certified paint inspector, shows an absence of lead-based paint. In addition, the Secretary may waive the requirements of this section if a clearance test conducted by a certified risk assessor has indicated the absence of lead-based paint hazards.

(b) *Hazard evaluation.* The Federal agency shall conduct a risk assessment and a paint inspection in accordance with part 37, subparts B and C, of this subtitle. Hazard evaluation must be completed according to a schedule determined by the Federal agency.

§ 36.48 Other required practices.

(a) *Required practices.* If abatement of lead-based paint hazards is conducted the following practices are required:

(1) *Occupant protection and worksite preparation* in accordance with part 37, subpart G, of this subtitle.

(2) *Monitoring* must be conducted in accordance with part 37, subpart J, of this subtitle if the Federal agency retains ownership of the property for more than 1 year.

(b) *Control of new hazards.* If monitoring identifies new lead-based paint hazards, the Federal agency shall conduct additional abatement activities in accordance with part 37, subpart F, of this subtitle. Abatement is completed when cleanup and clearance are achieved in accordance with part 37, subparts H and I, of this subtitle.

Subpart D—Project-Based Assistance Provided by a Federal Agency Other Than HUD

§ 36.60 Purpose and applicability.

The purpose of this subpart D is to establish procedures to eliminate as far as practicable lead-based paint hazards in a residential property that receives more than $5,000 in project-based assistance under a program administered by a Federal agency other than HUD.

§ 36.62 Lead hazard information pamphlet.

If a tenant resides in a residential property prior to the effective date of the regulation implementing section 1018 of Title X of the Housing and Community Development Act of 1992 (42 U.S.C. 4852d), and the property receives Federal project-based assistance, the owner shall provide the lead hazard information pamphlet developed by the Environmental Protection Agency, pursuant to section 406(a) of the Toxic Substances Control Act, 15 U.S.C. 2686 to the tenant.

§ 36.64 Notice of evaluation, paint repair and hazard reduction activities.

In cases where evaluation, paint repair or hazard reduction is undertaken, each owner shall provide a notice to tenants. The notice must include:

(a) A summary of the nature, scope and results of the evaluation, paint repair or hazard reduction activities;

(b) Information on how to obtain access to the actual evaluation report; and

(c) Available information on the location of any remaining lead-based paint on a surface-by-surface basis after conducting hazard reduction.

§ 36.66 Risk assessments.

Each owner shall complete a risk assessment in accordance with part 37, subpart B, of this subtitle. Each risk assessment must be completed no later than the schedule established by the Federal agency.

§ 36.68 Hazard reduction.

Each owner shall conduct hazard reduction activities consistent with the findings of the risk assessment report. Hazard reduction must be conducted in accordance with part 37, subparts E and F, of this subtitle and is completed when cleanup and clearance are achieved in accordance with part 37, subparts H and I, of this subtitle.

§ 36.70 EBL child.

Risk assessment and hazard reduction. If a child less than 6 years of age living in a federally assisted dwelling unit has an EBL, the owner shall immediately conduct a risk assessment in accordance with part 37, subpart B, of this subtitle. Reduction of identified lead-based paint hazards must be conducted in accordance with part 37, subparts E and F, of this subtitle and is completed when cleanup and clearance are achieved in accordance with part 37, subparts H and I, of this subtitle. The Federal agency shall establish a schedule for completing risk assessments and hazard reduction when an EBL child is identified.

§ 36.72 Other required practices.

(a) *Required practices.* If hazard reduction is conducted, the following practices are required:

(1) *Occupant protection and worksite preparation* in accordance with part 37, subpart G, of this subtitle.

(2) *Monitoring* in accordance with part 37, subpart J, of this subtitle.

(b) *Control of new hazards.* If monitoring identifies new lead-based paint hazards, each owner shall conduct additional hazard reduction activities in accordance with part 37, subparts E and F, of this subtitle. Hazard reduction is completed when cleanup and clearance are achieved in accordance with part 37, subparts H and I, of this subtitle.

Subpart E—Single Family Insured Property

§ 36.80 Purpose and applicability.

The purpose of this subpart E is to establish procedures to eliminate as far as practicable lead-based paint hazards in a single family property that receives mortgage insurance under a program administered by the Secretary, including One- to Four-Family Home Mortgage Insurance (12 U.S.C. 1709 (b) and (i)); Rehabilitation Mortgage Insurance (12 U.S.C. 1709(k)); Homeownership Assistance for Low- and Moderate-Income Families (12 U.S.C. 1715(d)(2)); Homes for Service Members (12 U.S.C. 1715m); Housing in Declining Neighborhoods (12 U.S.C. 1715n(e)); Condominium Housing (12 U.S.C. 1715y); Special Credit Risks (12 U.S.C. 1715z–2); Housing in Military Impacted Areas (12 U.S.C. 1715z–3(c)); Single Family Home Mortgage Coinsurance (12 U.S.C. 1715z–9); Graduated Payment Mortgages (12 U.S.C. 1715z–10); Adjustable Rate Mortgages (ARMs) (12 U.S.C. 1715z–16); and Home Equity Conversion Mortgage (HECM) (12 U.S.C. 1715z–20).

§ 36.82 Exemptions.

(a) Applications for insurance in connection with a refinancing transaction are excluded from the coverage of this subpart E if an appraisal is not required under the applicable procedures established by the Secretary.

(b) *Limited paint inspection.* The requirements of §§ 36.86 and 36.88 do not apply for a specific deteriorated paint surface on which a paint inspection has been completed in accordance with part 37, subparts B or C, of this subtitle and indicates the absence of lead-based paint (*i.e.* lead-free). To be exempt from §§ 36.86 and 36.88, documentation of the absence of lead-based paint on each deteriorated surface must be provided to the fee panel appraiser or direct endorsement appraiser. Results of additional test(s) by a certified paint inspector may be used to confirm or refute a prior finding.

§ 36.84 Lead hazard information pamphlet.

When an appraisal is required for refinancing under a program described in § 36.80, each mortgagee shall provide each prospective occupant residing in the residential property prior to the effective date of the regulation implementing section 1018 of Title X of the Housing and Community Development Act of 1992, with the lead hazard information pamphlet developed by the Environmental Protection Agency, pursuant to section 406(a) of the Toxic Substances Control Act, 15 U.S.C. 2686.

§ 36.86 Visual evaluation of painted surfaces.

The mortgagee must require the appraiser to conduct a visual evaluation of all painted surfaces in order to identify deteriorated paint.

§ 36.88 Paint repair and cleanup.

(a) *Paint repair and cleanup.* (1) Each deteriorated paint surface must be repaired, and cleanup of the worksite must be conducted, in accordance with part 37, subpart D, of this subtitle.

(2) The commitment or other approval document must contain the requirement that all deteriorated paint surfaces must be repaired and cleanup of the worksite conducted before the mortgage is endorsed for insurance.

(b) *Escrow procedure.* An escrow fund may be established in order to conduct paint repair and cleanup after the mortgage is endorsed for insurance only in the following three cases:

(1) For mortgage insurance to finance rehabilitation work under 12 U.S.C. 1709(k), provided that paint repair and cleanup are conducted in conjunction with the rehabilitation work and will be completed as expeditiously as possible; or

(2) For HECM mortgage insurance, provided that the paint repair and cleanup costs do not exceed 15 percent of the HECM maximum claim amount and the payment model includes a provision for funds reserved for post-endorsement repairs. Paint repair and cleanup must be completed as expeditiously as possible; or

(3) When weather conditions prevent the completion of paint repair and cleanup on exterior surfaces, provided that paint repair and cleanup are completed as soon as practicable.

Subpart F—Disposition of HUD-Owned Single Family Property (With Sufficient Appropriations)

§ 36.100 Purpose and applicability.

The purpose of this subpart F is to establish procedures to eliminate as far as practicable lead-based paint hazards prior to the disposition (*i.e.* sale) of a single family property that is owned by HUD. The Secretary shall determine:

(a) If there are sufficient appropriations to cover the costs of §§ 36.104–36.108; and

(b) When the procedures in these sections will take effect.

§ 36.102 Exemptions.

(a) In the absence of appropriations sufficient to cover the costs of §§ 36.104 through 36.108 as determined by the

Secretary, these requirements shall not apply to the Department. Instead, the Department shall, at a minimum, follow the requirements of subpart G of this part.

(b) A dwelling unit that has sustained extensive damage requiring major rehabilitation or demolition is exempt from the requirements of §§ 36.104 through 36.108.

§ 36.104 Disposition of single family property constructed before 1960.

(a) *Hazard evaluation.* Before the closing of the sale of the property, the Department shall conduct a risk assessment and a paint inspection in accordance with part 37, subparts B and C, of this subtitle.

(b) *Abatement of lead-based paint hazards.* Before the closing of the sale of the property, the Department shall conduct abatement of all identified lead-based paint hazards in accordance with part 37, subpart F, of this subtitle. Abatement is completed when cleanup and clearance are achieved in accordance with part 37, subparts H and I, of this subtitle. In the case of a sale to a non-occupant purchaser, abatement may be made a condition of sale with sufficient funds escrowed. In the case of a HUD-owned property leased to a unit of government or a nonprofit organization under a program administered by the Secretary, the Department shall make abatement a condition of the lease agreement and the lessor shall certify acceptance of the abatement responsibility. Occupancy is not permitted in either case until all required abatement is complete.

§ 36.106 Disposition of single family property constructed after 1959 and before 1978.

(a) *Exemption.* The Secretary may waive the paint inspection and risk assessment requirements of this section if documentation is provided to the Secretary that a risk assessment, performed by a certified risk assessor, shows an absence of lead-based paint hazards, or that a paint inspection, performed by a certified paint inspector, shows an absence of lead-based paint. In addition, the Secretary may waive the requirements of this section if a clearance test conducted by a certified risk assessor has indicated the absence of lead-based paint hazards.

(b) *Hazard evaluation.* Before the closing of the sale of the property, the Department shall conduct a risk assessment and a paint inspection in accordance with part 37, subparts B and C, of this subtitle.

§ 36.108 Other required practices.

(a) *Required practices.* If abatement of lead-based paint hazards is conducted, the following practices are required:

(1) *Occupant protection and worksite preparation* in accordance with part 37, subpart G, of this subtitle.

(2) *Monitoring* must be conducted in accordance with part 37, subpart J, of this subtitle if the Department retains ownership of the property for more than 1 year. In the case of a HUD-owned property leased to a unit of government or a nonprofit organization under a program administered by the Secretary, the Department shall make monitoring a condition of the lease agreement and the lessor shall certify acceptance of the monitoring responsibility.

(b) *Control of new hazards.* If monitoring identifies new lead-based paint hazards, the Department or the lessor shall conduct additional abatement activities in accordance with part 37, subpart F, of this subtitle. Abatement is completed when cleanup and clearance are achieved in accordance with part 37, subparts H and I, of this subtitle.

Subpart G—Disposition of HUD-Owned Single Family Property (Without Sufficient Appropriations)

§ 36.120 Purpose and applicability.

In the absence of appropriations sufficient to cover the costs of subpart F of this part as determined by the Secretary, the purpose of this subpart G is to establish alternative procedures to eliminate as far as practicable lead-based paint hazards prior to the disposition (*i.e.* sale) of a single family property that is owned by HUD.

§ 36.122 Exemptions.

(a) *Limited paint inspection.* The Department shall be exempt from the requirements of §§ 36.124 through 36.128 for a specific deteriorated paint surface if documentation exists that a paint inspection has been completed in accordance with part 37, subparts B or C, of this subtitle and indicates the absence of lead-based paint on each surface to be exempt (*i.e.* lead-free). Results of additional test(s) by a certified paint inspector may be used to confirm or refute a prior finding.

(b) *Extensive damage.* A dwelling unit that has sustained extensive damage requiring major rehabilitation or demolition is exempt from the requirements of §§ 36.124 through 36.128.

§ 36.124 Visual evaluation of painted surfaces.

Before the closing of the sale of the property, the Department shall conduct a visual evaluation of all painted surfaces in order to identify deteriorated paint.

§ 36.126 Paint repair and cleanup.

(a) *Paint repair and cleanup.* Before the closing of the sale of the property, the Department shall repair each deteriorated paint surface, and conduct cleanup of the worksite, in accordance with part 37, subpart D, of this subtitle.

(b) *Repainting exemption.* The Department may be exempt from the repainting requirements described in § 37.50(f) of this subtitle if weather conditions make repainting infeasible or if the property is scheduled for major rehabilitation or demolition. If the Department does not repaint a property because of weather conditions, major rehabilitation, or demolition, the possible existence of a lead-based paint hazard must be disclosed to the potential purchaser before the closing of the sale of the property.

(c) *Condition of sale or lease.* In the case of a sale to a non-occupant purchaser, paint repair and cleanup may be made a condition of sale with sufficient sale funds escrowed. In the case of a HUD-owned property leased to a unit of government or a nonprofit organization under a program administered by the Secretary, the Department shall make paint repair and cleanup a condition of the lease agreement and the lessor shall certify acceptance of the abatement responsibility.

(d) *Occupancy.* In the case of a sale or lease, occupancy is not permitted until all required paint repair and cleanup is complete.

§ 36.128 Monitoring.

If the Department retains ownership of the property for more than 1 year, monitoring must be conducted in accordance with part 37, subpart J, of this subtitle. In the case of a HUD-owned property leased to a unit of government or a nonprofit organization under a program administered by the Secretary, the Department shall make monitoring a condition of the lease agreement and the lessor shall certify acceptance of the monitoring responsibility. If monitoring identifies new deteriorated paint surfaces, the Department or the lessor shall conduct paint repair and cleanup in accordance with part 37, subpart D, of this subtitle.

Subpart H—Multifamily Insured Property

§ 36.140 Purpose and applicability.

The purpose of this subpart H is to establish procedures to eliminate as far

as practicable lead-based paint hazards in a multifamily property that receives mortgage insurance under a program administered by the Secretary, including Multifamily Rental Housing (12 U.S.C. 1713); Cooperative Housing (12 U.S.C. 1715e); Mortgage and Major Home Improvement Loan Insurance for Urban Renewal Areas (12 U.S.C. 1715k (a) and (h)); Multifamily Rental Housing for Moderate-Income Families (12 U.S.C. 1715(l)(d) (3) and (4)); Existing Multifamily Rental Housing (12 U.S.C. 1715n(f)); Mortgage Insurance for Housing for the Elderly (12 U.S.C. 1715v); Condominium Housing (12 U.S.C. 1715y); Title II of the Housing and Community Development Act of 1987 (Emergency Low Income Housing Preservation Act of 1987; 12 U.S.C. 1715l note); section 601 of the Cranston-Gonzalez National Affordable Housing Act (Low Income Housing Preservation and Resident Ownership Act of 1990; 12 U.S.C. 1715l note); and Supplemental Loan for Project Mortgage Insurance (12 U.S.C. 1715n).

§ 36.142 Exemptions.

(a) Applications for insurance in connection with a refinancing transaction are excluded from the coverage of this subpart H if an appraisal is not required under the applicable procedures established by the Secretary.

(b) *Limited paint inspection.* The requirements of §§ 36.146 and 36.148 do not apply for a specific deteriorated paint surface on which a paint inspection has been completed in accordance with part 37, subparts B or C, of this subtitle, and indicates the absence of lead-based paint (*i.e.* lead-free). To be exempt from §§ 36.146 and 36.148, documentation of the absence of lead-based paint on each deteriorated paint surface must be provided to the Department's and the sponsor's architect. Results of additional test(s) by a certified paint inspector may be used to confirm or refute a prior finding.

§ 36.144 Lead hazard information pamphlet.

When an appraisal is required for refinancing under a program described in § 36.140, each mortgagee shall provide each prospective occupant residing in the residential property prior to the effective date of the regulation implementing section 1018 of Title X of the Housing and Community Development Act of 1992, with the lead hazard information pamphlet developed by the Environmental Protection Agency, pursuant to section 406(a) of the Toxic Substances Control Act, 15 U.S.C. 2686.

§ 36.146 Visual evaluation of painted surfaces.

Before the issuance of the firm commitment, the Department's or the sponsor's architect shall conduct a visual evaluation of all painted surfaces in order to identify deteriorated paint.

§ 36.148 Paint repair and cleanup.

Before the issuance of the firm commitment, each deteriorated paint surface must be repaired, and cleanup of the worksite conducted, in accordance with part 37, subpart D, of this subtitle.

Subpart I—Project-Based Assistance

§ 36.160 Purpose and applicability.

(a) *Purpose.* The purpose of this subpart I is to establish procedures to eliminate as far as practicable lead-based paint hazards in a multifamily property receiving more than $5,000 in project-based assistance under a program administered by the Secretary including the Rent Supplement Payment Program (12 U.S.C. 1701s); Supportive Housing for the Elderly (12 U.S.C. 1701q); Rental Assistance Payments Program (12 U.S.C. 1715z–1); Supportive Housing for Persons with Disabilities (42 U.S.C. 8013); Direct Loans for Housing for the Elderly or Handicapped (12 U.S.C. 1701q); Section 8 Housing Assistance Payments Program for New Construction, Section 8 Housing Assistance Payments Program for Substantial Rehabilitation, Section 8 Housing Assistance Payment Program for State Housing Agencies, Section 8 Housing Assistance Payment Program for Section 515 Rural Rental Housing Projects, and Section 8 Housing Assistance Payments Program—Special Allocations (LMSA & Property Disposition Set Aside); Section 8 Moderate Rehabilitation Program (42 U.S.C. 1437f); Project-Based Certificate Program (42 U.S.C. 1437f); Homeownership of Multifamily Units (HOPE 2) (42 U.S.C. 12871–12880); Shelter Plus Care Project- and Sponsor-Based Rental Assistance (42 U.S.C. 11403 *et seq.*); and Assisted Housing Drug Elimination Program (42 U.S.C. 11901 note).

(b) *Applicability.* (1) For a multifamily property receiving more than the $5,000 per unit annual initial contract rent threshold in project-based assistance under a program described in § 36.160(a), the requirements of §§ 36.162–36.172 shall apply.

(2) For a multifamily property that receives less than the $5,000 per unit annual initial contract rent threshold in project-based assistance under a program described in § 36.160(a), or a single family property that receives project-based assistance through the Department's Section 8 Moderate Rehabilitation or Project-Based Certificate programs, the requirements of §§ 36.162 through 36.172 do not apply; and the requirements set out in §§ 36.292 through 36.302 shall apply. For a multifamily property receiving less than the $5,000 per unit in project-based assistance, the owner shall implement the requirements specified for the housing authority in §§ 36.292 through 36.302.

§ 36.162 Lead hazard information pamphlet.

If a tenant resides in a residential property prior to the effective date of the regulation implementing section 1018 of Title X of the Housing and Community Development Act of 1992, and the property receives project-based assistance as described in § 36.160, the owner shall provide the lead hazard information pamphlet developed by the Environmental Protection Agency, pursuant to section 406(a) of the Toxic Substances Control Act, 15 U.S.C. 2686 to the tenant.

§ 36.164 Notice of evaluation, paint repair and hazard reduction activities.

(a) *Notice of evaluation.* In cases where evaluation is undertaken, each owner shall provide a notice to tenants.

(1) Notice of the evaluation must include:

(i) A summary of the nature, scope and results of the evaluation; and

(ii) A contact name and phone number for more information, or to obtain access to the actual evaluation report.

(2) The owner shall post or distribute the notice within 15 calendar days of receiving the evaluation report.

(b) *Notice of paint repair and hazard reduction.* In cases where paint repair or hazard reduction is undertaken, each owner shall provide a notice to tenants.

(1) Notice of paint repair or hazard reduction must include:

(i) A summary of the nature, scope and results of the paint repair or hazard reduction;

(ii) A contact name and phone number for more information; and

(iii) Available information on the location of any remaining lead-based paint on a surface-by-surface basis.

(2) The owner shall post or distribute the notice within 15 calendar days of completing paint repair or hazard reduction.

(3) The owner shall periodically update the notice, based on any reevaluation of the residential property and as additional paint repair or hazard reduction work is conducted.

(c) *Availability of notices of evaluation, paint repair and hazard reduction.* (1) The notices of evaluation, paint repair or hazard reduction must be of a size and type that is easily read by tenants.

(2) To the extent practicable, each notice shall be made available, upon request, in an accessible format to persons with disabilities (i.e. braille, large type, computer disk, audio tape).

(3) To the extent practicable, each notice shall be provided in the tenant's primary language.

(4) The owner shall provide the notices to the tenants by:

(i) Posting it in a centrally located, easily accessible common area; or

(ii) Distributing it to each occupied dwelling unit.

§ 36.166 Risk assessments.

(a) *Risk assessments prior to the agreement period.* Prior to the agreement to enter into a housing assistance payment (HAP) contract or the project rental assistance contract (PRAC), each owner shall complete a risk assessment in accordance with part 37, subpart B, of this subtitle. If the risk assessment identifies lead-based paint hazards, the owner shall also submit a plan in accordance with § 36.168 prior to execution of the Agreement to Enter into a HAP Contract or the PRAC contract.

(b) *Risk assessment during the housing assistance payment contract period.* If a risk assessment and a hazard reduction plan were not completed prior to the agreement period described in (a) of this section, each owner shall complete a risk assessment in accordance with part 37, subpart B, of this subtitle. If the risk assessment identifies lead-based paint hazards, the owner shall submit a plan in accordance with § 36.168. Each risk assessment must be completed no later than the following schedule or a schedule otherwise determined by the Secretary:

(1) Risk assessments must be completed on or before (2 years after the effective date of this rule) in a multifamily property constructed before 1960.

(2) Risk assessments must be completed on or before (4 years after the effective date of this rule) in a multifamily property constructed after 1959 and before 1965.

(3) Risk assessments must be completed on or before (6 years after the effective date of this rule) in a multifamily property constructed after 1964 and before 1971.

(4) Risk assessments must be completed on or before (8 years after the effective date of this rule) in a multifamily property constructed after 1970 and before 1978.

§ 36.168 Hazard reduction plan.

If a risk assessment report identifies lead-based paint hazards, the owner shall develop an hazard reduction plan (hereafter, ''the plan'').

(a) *Contents of the plan.* The plan must propose hazard reduction activities consistent with the findings of the risk assessment report. Hazard reduction must be conducted in accordance with part 37, subparts E and F, of this subtitle, and are completed when cleanup and clearance is achieved in accordance with part 37, subparts H and I, of this subtitle. The plan must include the following:

(1) A summary of the nature, scope and results of the risk assessment, including the acceptable hazard reduction methods identified by the risk assessor;

(2) A detailed description of the nature and scope of the hazard reduction to be conducted;

(3) A description of how the requirements of § 36.172 will be conducted;

(4) A schedule for completing initial hazard reduction;

(5) An estimated cost of conducting the initial hazard reduction activities, including costs for clean-up, clearance, and monitoring; and

(6) Proof that the owner has sufficient funds to complete the initial hazard reduction activities proposed in the plan, except that such proof is not required for properties receiving assistance under the Section 8 Project-Based Certificate program.

(b) *Owner action.* (1) If no rent adjustment is necessary to implement the plan, the owner shall certify to the Department that the contents of the plan are consistent with the requirements of part 37, subparts E, F, H, and I, of this subtitle. The certification must be submitted to the Department and a copy must be provided to any Contract Administrator or HA no later than 120 days after completion of the risk assessment, unless otherwise permitted by the Department.

(2) If a rent adjustment is necessary to implement the hazard reduction plan, the owner shall submit the plan to the Department and a copy must be provided to any Contract Administrator or HA in conjunction with the next rent adjustment request, but no later than 120 days after completion of the risk assessment, unless otherwise permitted by the Department. This requirement does not apply to properties receiving assistance under the Section 8 Project-Based Certificate program.

(c) *HUD approval.* The Department shall review each plan submitted by an owner in conjunction with a rent adjustment request. The Department may recommend alternative activities for reducing lead-based paint hazards if the hazard reduction activities described in the plan are determined by the Department to be too costly for the property. Any alternative activity proposed by the Department must be consistent with the risk assessment report for the property and must be conducted in accordance with part 37, subparts E, F, H, and I, of this subtitle. The Department shall also conduct an environmental review in accordance with part 50 of this subtitle prior to approval of the hazard reduction plan or recommendation of alternative hazard reduction activities. A copy of the Department's determinations shall be transmitted to any Contract Administrator or HA. The requirements of this paragraph (c) do not apply to properties receiving assistance under the Section 8 Project-Based Certificate program.

§ 36.169 Hazard reduction.

Each owner shall conduct hazard reduction to treat the lead-based paint hazards identified in § 36.166 in accordance with part 37, subparts E and F, of this subtitle. Hazard reduction are considered completed when cleanup and clearance are achieved in accordance with part 37, subparts H and I, of this subtitle.

§ 36.170 EBL child.

(a) *Risk assessment and hazard reduction.* If a child less than 6 years of age living in a dwelling unit has an EBL, the owner shall immediately conduct a risk assessment in accordance with part 37, subpart B, of this subtitle. Hazard reduction of identified lead-based paint hazards must be conducted in accordance with part 37, subparts E and F, of this subtitle, and are completed when cleanup and clearance are achieved in accordance with part 37, subparts H and I, of this subtitle.

(b) *Reporting requirement.* The owner shall report the name and address of an identified EBL child to the State or local health agency. In the case of a property receiving assistance under the Section 8 Project-Based Certificate program and the Section 8 Moderate Rehabilitation program, the owner shall also report the name and address of the EBL child to the public housing agency.

§ 36.172 Other required practices.

(a) *Required practices.* If hazard reduction is conducted the following practices are required:

(1) *Occupant protection and worksite preparation* in accordance with part 37, subpart G, of this subtitle.

(2) *Monitoring* in accordance with part 37, subpart J, of this subtitle.

(b) *Control of new hazards.* If monitoring identifies new lead-based paint hazards, each owner shall conduct additional hazard reduction activities in accordance with subparts E and F. Hazard reduction is completed when cleanup and clearance are achieved in accordance with part 37, subparts H and I, of this subtitle.

Subpart J—Disposition of HUD-Owned and Mortgagee-in-Possession Multifamily Property (With Sufficient Appropriations)

§ 36.180 Purpose and applicability.

The purpose of this subpart is to establish procedures to eliminate as far as practicable lead-based paint hazards prior to the disposition (*i.e.* sale) of a multifamily property that is owned by HUD or for which HUD is identified as mortgagee-in-possession. The Secretary shall determine:

(a) if there are sufficient appropriations to cover the costs of §§ 36.184 through 36.190; and

(b) when the procedures in these sections will take effect.

§ 36.182 Exemption.

(a) In the absence of appropriations sufficient to cover the costs of §§ 36.184 through 36.190 as determined by the Secretary, these requirements shall not apply to the Department. Instead, the Department shall, at a minimum, follow the requirements of subpart K of this part.

(b) A dwelling unit that has sustained extensive damage requiring major rehabilitation or demolition is exempt from the requirements of §§ 36.184 through 36.190.

§ 36.184 Disposition of multifamily property constructed before 1960.

(a) *Hazard evaluation.* Before publicly advertising the property for sale, the Department shall conduct a risk assessment and a paint inspection in accordance with part 37, subparts B and C, of this subtitle.

(b) *Abatement of lead-based paint hazards.* The Department shall conduct abatement of identified lead-based paint hazards in accordance with part 37, subpart F, of this subtitle. Abatement is completed when cleanup and clearance are achieved in accordance with part 37, subparts H and I, of this subtitle. Abatement of all lead-based paint hazards must be completed no later than conveyance of the title by the Department at a HUD-owned sale, or before a foreclosure sale caused by the Secretary when the Department is Mortgagee-in-Possession of the property. If the disposition program under part 290 of this title provides for repairs to be performed by the purchaser, abatement may be included in the required repairs.

§ 36.186 Disposition of multifamily property constructed after 1959 and before 1978.

(a) *Exemption.* The Secretary may waive the paint inspection and risk assessment requirements of this section if documentation is provided to the Secretary that a risk assessment, performed by a certified risk assessor, shows an absence of lead-based paint hazards, or that a paint inspection, performed by a certified paint inspector, shows an absence of lead-based paint. In addition, the Secretary may waive the requirements of this section if a clearance test conducted by a certified risk assessor has indicated the absence of lead-based paint hazards.

(b) *Hazard evaluation.* Before publicly advertising the property for sale, the Department shall conduct a risk assessment and a paint inspection in accordance with part 37, subparts B and C, of this subtitle.

§ 36.188 EBL child.

(a) *Hazard evaluation and reduction.* If a child less than age 6 living in a multifamily dwelling unit owned by the Department (or where the Department is Mortgagee-in-Possession) has an EBL, the Department shall immediately conduct a risk assessment and a paint inspection in accordance with part 37, subparts B and C, of this subtitle. Reduction of identified lead-based paint hazards must be conducted in accordance with part 37, subparts E and F, of this subtitle, and is completed when cleanup and clearance are achieved in accordance with part 37, subparts H and I, of this subtitle.

(b) *Reporting requirement.* The Department shall report the name and address of an identified EBL child to the State or local health agency.

§ 36.190 Other required practices.

(a) *Required practices.* If reduction of lead-based paint hazards is conducted, the following practices are required:

(1) *Occupant protection and worksite preparation* in accordance with part 37, subpart G, of this subtitle.

(2) *Monitoring* must be conducted in accordance with part 37, subpart J, of this subtitle if the Department retains ownership of the property for more than 1 year.

(b) *Control of new hazards.* If monitoring identifies new lead-based paint hazards, the Department shall conduct abatement in accordance with part 37, subpart F, of this subtitle. Abatement is completed when cleanup and clearance are achieved in accordance with part 37, subparts H and I, of this subtitle.

Subpart K—Disposition of HUD-Owned and Mortgagee-in-Possession Multifamily Property (Without Sufficient Appropriations)

§ 36.200 Purpose and applicability.

In the absence of appropriations sufficient to cover the costs of subpart J as determined by the Secretary, the purpose of this subpart is to establish alternative procedures to eliminate as far as practicable lead-based paint hazards prior to the disposition (*i.e.* sale) of a multifamily property that is owned by HUD or for which HUD is identified as mortgagee-in-possession.

§ 36.202 Exemptions.

(a) *Limited paint inspection.* The Department shall be exempt from the requirements of §§ 36.204 through 36.210 for a specific deteriorated paint surface if documentation exists that a paint inspection has been completed in accordance with part 37, subparts B or C, of this subtitle, and indicates the absence of lead-based paint on each surface to be exempt (*i.e.* lead-free). Results of additional test(s) by a certified paint inspector may be used to confirm or refute a prior finding.

(b) *Extensive damage.* A dwelling unit that has sustained extensive damage requiring major rehabilitation or demolition is exempt from the requirements of §§ 36.204 through 36.210.

§ 36.204 Visual evaluation of painted surfaces.

Before publicly advertising the property for sale, the Department shall conduct a visual evaluation of all painted surfaces in order to identify deteriorated paint.

§ 36.206 Paint repair and cleanup.

(a) *Paint repair and cleanup.* The Department shall repair each deteriorated paint surface and conduct cleanup of the worksite in accordance with part 37, subpart D, of this subtitle.

(b) *Completion of paint repair and cleanup.* Paint repair and cleanup of deteriorated paint surfaces must be completed no later than conveyance of the title by the Department at a HUD-owned sale, or before a foreclosure sale caused by the Secretary when the Department is Mortgagee-in-Possession of the property. If the disposition program under part 290 of this title

provides for repairs to be performed by the purchaser, paint repair and cleanup may be included in the required repairs.

(c) *Occupancy.* In the case of sale or lease, occupancy is not permitted until all required paint repair and cleanup is complete.

§ 36.208 EBL child.

(a) *Hazard evaluation and reduction.* If a child less than age 6 living in a multifamily dwelling unit owned by the Department (or where the Department is Mortgagee-in-Possession) has an EBL, the Department shall immediately conduct a risk assessment in accordance with part 37, subpart B, of this subtitle. Reduction of identified lead-based paint hazards must be conducted in accordance with part 37, subparts E and F, of this subtitle, and are completed when cleanup and clearance are achieved in accordance with part 37, subparts H and I, of this subtitle.

(b) *Reporting requirement.* The Department shall report the name and address of an identified EBL child to the State or local health agency.

§ 36.210 Monitoring.

If the Department retains ownership of the property for more than 1 year, monitoring must be conducted in accordance with part 37, subpart J, of this subtitle. If monitoring identifies new deteriorated paint surfaces, the Department shall conduct paint repair and cleanup in accordance with part 37, subpart D, of this subtitle.

Subpart L—Rehabilitation

§ 36.220 Purpose and applicability.

(a) *Purpose and applicability.* The purpose of this subpart is to establish procedures to eliminate as far as practicable lead-based paint hazards in a residential property that receives Federal rehabilitation assistance under a program administered by the Secretary. These programs include the Community Development Block Grant (42 U.S.C. 5301 *et seq.*), HOME Investment Partnerships (42 U.S.C. 12701–12840), HOPE for Homeownership of Single Family Homes (HOPE 3), (42 U.S.C. 12891–12898); Indian Community Development Block Grant Program (42 U.S.C. 5301 *et seq.*, and 25 U.S.C. 450 *et seq.*); Indian HOME Investment Partnerships (42 U.S.C. 12701–12840, and 25 U.S.C. 450 *et seq.*); Homeownership of Multifamily Units (HOPE 2) (42 U.S.C. 12871–12880); Emergency Shelter Grants (42 U.S.C. 11371–11378); Permanent Housing for Handicapped Homeless Persons (42 U.S.C. 11381 *et seq.*); Supportive Housing Program (42 U.S.C. 11381–11389); and the Flexible Subsidy-Capital Improvement Loan Program (12 U.S.C. 1715z–1a).

(b) *Delegation of responsibility.* Where applicable, the grantee or participating jurisdiction may require the subrecipient or other entity administering Federal rehabilitation assistance to perform the responsibilities set forth in this subpart.

§ 36.222 Definitions.

For purposes of this subpart:

CILP recipient means an owner of a multifamily property which is undergoing rehabilitation funded by the Flexible Subsidy-Capital Improvement Loan Program (CILP).

Hard costs of rehabilitation means:

(1) Costs to correct substandard conditions or to meet the applicable local rehabilitation standards;

(2) Costs to make essential improvements, including energy-related repairs, and those necessary to permit use by handicapped persons; and costs to repair or replace major housing systems in danger of failure; and

(3) Costs of non-essential improvements, including additions and alterations to an existing structure.

Subrecipient means any organization selected by the grantee or participating jurisdiction to administer all or a portion of the Federal rehabilitation assistance. An owner or developer receiving Federal rehabilitation assistance for a residential property is not considered a subrecipient for the purposes of carrying out that project.

§ 36.224 Exemptions.

(a) Any rehabilitation that does not disturb a painted surface is exempt from the requirements of this subpart, except for the requirements of § 36.230.

(b) If a grantee, participating jurisdiction or CILP recipient certifies to the Department that a residential property undergoing federally funded rehabilitation has previously removed all lead-based paint, the requirements of this subpart do not apply.

(c) A dwelling unit may be exempt from the requirement to conduct a limited paint inspection if the grantee, participating jurisdiction or CILP recipient provides certification that a paint inspection has been previously completed in accordance with part 37, subpart C, of this subtitle and indicates the absence of lead-based paint in the dwelling unit (i.e. lead-free). Results of additional test(s) by a certified paint inspector may be used to confirm or refute a prior finding.

§ 36.226 Rehabilitation costs.

(a) *Applicability.* This section applies to recipients of Federal rehabilitation assistance as described in § 36.220, except for CILP recipients.

(b) *Rehabilitation assistance.* For purposes of implementing §§ 36.234 through 36.238, rehabilitation assistance is based on an average per unit investment of Federal funds for the hard costs of rehabilitation excluding lead-based paint hazard evaluation and cleanup activities.

(c) *Calculating rehabilitation assistance.* For a residential property that includes both federally assisted and non-assisted units, the rehabilitation costs of non-assisted units are not included in the calculation.

(1) The average cost of rehabilitation for the assisted units is calculated as follows:

Per Unit Rehab $ = [Total Federal Rehab Assistance for Units + (Federal Rehab $ for Common Areas & Exterior Painted Surfaces × % of Units Federally Assisted)] / Number of Federally Assisted Units.

(2) Example: Eight out of 10 dwelling units in a residential property receive Federal rehabilitation assistance. The total amount of Federal rehabilitation assistance for the dwelling units is $90,000 and the total amount of Federal rehabilitation assistance for the common areas and exterior surfaces is $10,000. Based on the formula above, the average per unit amount of Federal rehabilitation assistance would be $12,250. This is illustrated as follows: $12,250 = [$90,000 + ($10,000 × 80%)] / 8.

§ 36.228 Calculating rehabilitation costs for the Flexible Subsidy-CILP program.

All dwelling units and common areas in a residential property are considered to be assisted under the CILP program. The cost of rehabilitation is calculated as follows:

Per Unit Rehab $ = Federal Rehab Assistance/Total Number of Units.

§ 36.229 Determining evaluation, paint repair and hazard reduction requirements.

The following examples illustrate how to determine whether the requirements of §§ 36.234, 36.236, or 36.238 apply to a dwelling unit receiving Federal rehabilitation assistance (dollar amounts are on a per unit basis):

(a) If the total investment of Federal assistance is $2,000, and the hard costs of rehabilitation are $10,000, the lead-based paint requirements would be: visual evaluation, paint repair and cleanup under § 36.232, because Federal assistance is less than $5,000.

(b) If the total investment of Federal assistance is $6,000, and the hard costs of rehabilitation are $2,000, the lead-

based paint requirements would be the same as in paragraph (a) of this section. Although the total Federal investment is more than $5,000, only $2,000 constitutes Federal rehabilitation assistance.

(c) If the total investment of Federal assistance is $6,000, and the hard costs of rehabilitation are $6,000, the lead-based paint requirements would be: paint inspection, risk assessment and reduction under § 36.236.

§ 36.230 Lead hazard information pamphlet.

The grantee, participating jurisdiction or CILP recipient shall provide the lead hazard information pamphlet developed by the Environmental Protection Agency pursuant to section 406(a) of the Toxic Substance Control Act, 15 U.S.C. 2686 to the tenant, owner-occupant or purchaser of a residential property that receives Federal rehabilitation assistance under this subpart.

§ 36.232 Notice of evaluation, paint repair and hazard reduction activities.

(a) *Notice of evaluation.* In cases where evaluation is undertaken as part of federally funded rehabilitation, each grantee, participating jurisdiction or CILP recipient shall provide a notice to tenants.

(1) Notice of the evaluation must include:

(i) A summary of the nature, scope and results of the evaluation; and

(ii) A contact name and phone number for more information or to obtain access to the actual evaluation report.

(2) The grantee, participating jurisdiction or CILP recipient shall post or distribute the notice within 15 calendar days of receiving the evaluation report.

(b) *Notice of paint repair and hazard reduction activities.* In cases where paint repair or hazard reduction activities are undertaken as part of a federally assisted rehabilitation, each grantee, participating jurisdiction or CILP recipient shall provide a notice to tenants.

(1) Notice of paint repair or hazard reduction activities must include:

(i) A summary of the nature, scope and results of the paint repair or lead hazard reduction activities;

(ii) A contact name and phone number for more information; and

(iii) Available information on the location of any remaining lead-based paint on a surface-by-surface basis.

(2) The grantee, participating jurisdiction or CILP recipient shall post or distribute the notice within 15 calendar days of completing hazard reduction activities.

(3) The grantee, participating jurisdiction or CILP recipient shall periodically update the notice, based on any reevaluation of the residential property and as additional paint repair or lead hazard reduction work is conducted.

(c) *Availability of notices of evaluation, paint repair and hazard reduction.* (1) The notices of evaluation, paint repair or hazard reduction must be of a size and type that are easily read by tenants.

(2) To the extent practicable, each notice shall be made available, upon request, in an accessible format to persons with disabilities (i.e. braille, large type, computer disk, audio tape).

(3) To the extent practicable, each notice shall be provided in the tenant's primary language.

(4) The owner shall provide each notice to the tenants by:

(i) Posting it in a centrally located, easily accessible common area; or

(ii) Distributing it to each occupied dwelling unit.

§ 36.234 Residential property receiving an average of less than $5,000 per unit in Federal rehabilitation assistance.

(a) *Visual evaluation.* Each grantee, participating jurisdiction or CILP recipient shall conduct a visual evaluation of all painted surfaces to be disturbed by rehabilitation in order to identify deteriorated paint.

(b) *Paint repair and cleanup.* Before occupancy of a vacant dwelling unit or, where a unit is occupied, before completion of rehabilitation, the grantee, participating jurisdiction or CILP recipient shall repair each deteriorated paint surface and conduct cleanup of the worksite in accordance with part 37, subpart D, of this subtitle.

§ 36.236 Residential property receiving an average of $5,000 or more and $25,000 or less per unit in Federal rehabilitation assistance.

(a) *Limited paint inspection.* Each grantee, participating jurisdiction or CILP recipient shall complete a limited paint inspection in accordance with part 37, subpart C, of this subtitle. Each limited paint inspection must be conducted before occupancy of a vacant dwelling unit or, where a unit is occupied, before rehabilitation work begins.

(b) *Risk assessment.* Each grantee, participating jurisdiction or CILP recipient shall complete a risk assessment in the federally assisted dwelling units, and in associated common areas and exterior painted surfaces, in accordance with part 37, subpart B, of this subtitle. A risk assessment must be conducted before occupancy of a vacant dwelling unit or, where a unit is occupied, before rehabilitation work begins.

(c) *Hazard reduction.* Each grantee, participating jurisdiction or CILP recipient shall conduct hazard reduction activities in accordance with part 37, subparts E and F, of this subtitle if a limited paint inspection identifies lead-based paint, or a risk assessment identifies a lead-based paint hazard. Hazard reduction activities are completed when cleanup and clearance are achieved in accordance with part 37, subparts H and I, of this subtitle.

§ 36.238 Residential property receiving an average of more than $25,000 per unit in Federal rehabilitation assistance.

(a) *Limited paint inspection.* Each grantee, participating jurisdiction or CILP recipient shall complete a limited paint inspection in accordance with part 37, subpart C, of this subtitle. Each limited paint inspection must be conducted before occupancy of a vacant dwelling unit or, where a unit is occupied, before rehabilitation work begins.

(b) *Risk assessment.* Each grantee, participating jurisdiction or CILP recipient shall complete a risk assessment in the federally assisted dwelling units, and in associated common areas and exterior painted surfaces, in accordance with part 37, subpart B, of this subtitle. A risk assessment must be conducted before occupancy of a vacant dwelling unit or, where a unit is occupied, before rehabilitation begins.

(c) *Abatement of lead-based paint hazards.* Each grantee, participating jurisdiction or CILP recipient shall abate any lead-based paint hazard on a surface to be disturbed by rehabilitation identified in paragraphs (a) or (b) of this section in accordance with part 37, subpart F, of this subtitle. Abatement is completed when cleanup and clearance are achieved in accordance with part 37, subparts H and I, of this subtitle.

(d) *Hazard reduction.* Each grantee, participating jurisdiction or CILP recipient shall conduct hazard reduction activities in accordance with part 37, subparts E and F, of this subtitle if a risk assessment identifies a lead-based paint hazard on a surface not disturbed by rehabilitation and the hazard has not been abated in accordance with paragraph (c) of this section. Hazard reduction activities are completed when cleanup and clearance are achieved in accordance with part 37, subparts H and I, of this subtitle.

§ 36.240 Other required practices.

If paint repair or hazard reduction is conducted the following practices are required:

(a) *Occupant protection and worksite preparation* in accordance with part 37, subpart G, of this subtitle.

(b) *Monitoring,* to the extent practicable, must be conducted in accordance with part 37, subpart J, of this subtitle.

Subpart M—Community Planning and Development (CPD) Non-Rehabilitation Programs

§ 36.250 Purpose and applicability.

(a) *Purpose and applicability.* The purpose of this subpart is to establish procedures to eliminate as far as practicable lead-based paint hazards in a residential property that receives Federal assistance under certain programs administered by the Secretary for acquisition or leasing, tenant-based rental assistance, or for support services or operation provided for a property. These programs include the Community Development Block Grant (42 U.S.C. 5301 *et seq.*); HOME Investment Partnerships (42 U.S.C. 12701–12840); Homeownership of Multifamily Units (HOPE 2) (42 U.S.C. 12871–12880); HOPE for Homeownership of Single Family Homes (HOPE 3) (42 U.S.C. 12891–12898); Indian Community Development Block Grant Program (42 U.S.C. 5301 *et seq.*); Indian HOME Investment Partnerships (25 U.S.C. 450 *et seq.*); Housing Opportunities for Persons with Aids (HOPWA) (42 U.S.C. 12901–12912); Permanent Housing for Handicapped Homeless Persons (42 U.S.C. 11381 *et seq.*); and Supportive Housing Program (42 U.S.C. 11381–11389).

(b) *Delegation of responsibility.* Where applicable, the grantee or participating jurisdiction may require the subrecipient administering Federal assistance to perform the responsibilities set forth in this subpart.

§ 36.252 Definition—subrecipient.

Subrecipient means any organization selected by the grantee or participating jurisdiction to administer all or a portion of the Federal assistance. An owner or developer of an assisted property is not considered a subrecipient for the purposes of carrying out that project.

§ 36.254 Exemption—limited paint inspection.

The requirements of §§ 36.258 and 36.260 do not apply for a specific deteriorated paint surface if the grantee or participating jurisdiction certifies that a paint inspection has been completed in accordance with part 37, subparts B or C, of this subtitle, and indicates the absence of lead-based paint on the specific deteriorated paint surface (*i.e.* lead-free). Results of additional test(s) by a certified paint inspector may be used to confirm or refute a prior finding.

§ 36.256 Lead hazard information pamphlet.

The grantee or participating jurisdiction shall provide the lead hazard information pamphlet developed by the Environmental Protection Agency pursuant to section 406(a) of the Toxic Substance Control Act, 15 U.S.C. 2686 to the tenant, owner-occupant or purchaser of a residential property that receives Federal assistance under this subpart.

§ 36.258 Residential property constructed before 1950.

If a dwelling unit receives Federal assistance under this subpart (except with tenant-based rental assistance), each grantee or participating jurisdiction shall conduct:

(a) A visual evaluation of all painted surfaces in order to identify deteriorated paint;

(b) Dust testing in accordance with § 37.16 of this subtitle to determine the presence of lead-contaminated dust; and

(c) Paint repair of each deteriorated surface and cleanup in accordance with part 37, subpart D, of this subtitle before occupancy of a vacant dwelling unit or, where a unit is occupied, immediately after receipt of Federal assistance. If the dust testing required in paragraph (b) of this section identifies the presence of lead-contaminated dust, the grantee or participating jurisdiction shall conduct cleanup of the horizontal surfaces in the room, dwelling unit or common areas where the lead-contaminated dust is located. If the dust testing indicates the absence of lead-contaminated dust, the grantee or participating jurisdiction shall conduct cleanup of the worksite.

§ 36.260 Residential property constructed after 1949 and before 1978.

If a dwelling unit receives Federal assistance under this subpart (except with tenant-based rental assistance), each grantee or participating jurisdiction shall conduct:

(a) A visual evaluation of all painted surfaces in order to identify deteriorated paint;

(b) Paint repair of each deteriorated surface and cleanup of the worksite in accordance with part 37, subpart D, of this subtitle before occupancy of a vacant dwelling unit or, where a unit is occupied, immediately after receipt of Federal assistance.

§ 36.262 Tenant-based rental assistance.

(a) *Applicability.* Tenant-based rental assistance provided to a family with a child less than 6 years of age is subject to the requirements of part 36, subpart O, of this subtitle, except for § 36.294.

(1) *Lead hazard information pamphlet.* The grantee or participating jurisdiction shall provide the lead hazard information pamphlet in accordance with § 36.256.

(2) The HOME administering agency shall assume the responsibilities of the HA set out in subpart O of this part.

(b) *Monitoring.* For assistance provided under part 92 of this subtitle, monitoring must be conducted as part of the periodic unit inspection required under § 92.211(g) of this subtitle.

Subpart N—Public and Indian Housing Programs

§ 36.270 Purpose and applicability.

The purpose of this subpart is to establish procedures to eliminate as far as practicable lead-based paint hazards in existing public and Indian housing projects that are covered under Public Housing Development (42 U.S.C. 1437b, 1437c and 1437g); Public Housing Operating Subsidy (42 U.S.C. 1437g); Public Housing Authority Owned or Leased Projects—Maintenance and Operation (42 U.S.C. 1437d and 1437g); Public Housing Modernization (Comprehensive Grant Program) (42 U.S.C. 1437l); Public Housing Modernization (Comprehensive Improvement Assistance Program) (42 U.S.C. 1437l); Homeownership and Opportunity for People Everywhere (HOPE 1) (42 U.S.C. 1437aaa *et seq.*); Public and Indian Housing Drug Elimination (42 U.S.C. 11901 note); and the Indian Housing Programs (42 U.S.C. 1437aa *et seq.*).

§ 36.272 Definition—Public or Indian housing project.

Public or Indian housing project means a residential property developed, acquired or assisted by a public or Indian housing agency under the United States Housing Act of 1937 (42 U.S.C. 1437 *et seq.*) and the improvement of any such property, other than under section 8 of that 1937 Act.

§ 36.274 Lead hazard information pamphlet.

If a tenant resides in a dwelling unit prior to the effective date of the regulation implementing section 1018 of Title X of the Housing and Community Development Act of 1992 (42 U.S.C. 4852d), and the unit receives Federal

assistance under a program described in § 36.270, the public or Indian housing agency (hereafter, ''HA'') shall provide the lead hazard information pamphlet developed by the Environmental Protection Agency, pursuant to section 406(a) of the Toxic Substances Control Act, 15 U.S.C. 2686, to the tenant upon recertification of income eligibility.

§ 36.276 Notices of evaluation and reduction of lead-based paint and lead-based paint hazards.

(a) *Notice of evaluation of lead-based paint and lead-based paint hazards.* In cases where lead-based paint or lead-based paint hazard evaluation is undertaken, each HA shall provide a notice to all tenants.

(1) Notice of the evaluation must include:

(i) A summary of the nature, scope and results of the evaluation; and

(ii) A contact name and phone number for more information, or to obtain access to the actual evaluation report.

(2) The HA shall post or distribute the notice within 15 calendar days of receiving the evaluation report.

(b) *Notice of reduction of lead-based paint or lead-based paint hazards.* In cases where reduction of lead-based paint or lead-based paint hazards is undertaken, each HA shall provide a notice to tenants.

(1) Notice of hazard reduction must include:

(i) A summary of the nature, scope and results of the hazard reduction activities;

(ii) A contact name and phone number for more information; and

(iii) Available information on the location of any remaining lead-based paint on a surface-by-surface basis.

(2) The HA shall post or distribute the notice within 15 calendar days of completing hazard reduction activities.

(3) The HA shall periodically update the notice, based on reevaluation of the public and Indian housing project and as any additional hazard reduction work is conducted.

(c) *Availability of notices of lead hazard evaluation and reduction activities.* (1) The notices of evaluation and hazard reduction must be of a size and type that is easily read by tenants.

(2) To the extent practicable, each notice shall be made available, upon request, in an accessible format to persons with disabilities (i.e. braille, large type, computer disk, audio tape).

(3) To the extent practicable, each notice shall be provided in the tenant's primary language.

(4) The HA shall provide each notice to the tenants by:

(i) Posting it in a centrally located, easily accessible common area; or

(ii) Distributing it to each occupied public and Indian housing project unit.

§ 36.278 Evaluation.

(a) *Exemption.* A public or Indian housing project shall be exempt from the requirements of this section if the HA can certify to the Department that:

(1) The public or Indian housing project has previously had all lead-based paint removed and all lead-based paint hazards have been abated; or

(2) A paint inspection described in paragraph (b) of this section and a risk assessment conducted in accordance with part 37, subpart B, of this subtitle were completed prior to (the effective date of this rule).

(b) *Paint inspection.* Each HA shall complete a paint inspection in the public and Indian housing project in accordance with part 37, subpart C, of this subtitle no later than (the effective date of this rule). If a paint inspection was completed prior to [the effective date of this rule], the Department strongly encourages each HA to conduct quality control activities in accordance with procedures established by the Secretary for on-site lead-based paint testing activities. Quality control activities are encouraged in order to determine whether a paint inspection has been properly performed and the results are reliable.

(c) *Visual evaluation, dust and soil tests.* If a paint inspection has indicated the presence of lead-based paint, each HA shall complete a visual evaluation to identify the location of deteriorated paint and conduct dust and soil tests in the public and Indian housing project. Dust and soil tests must be conducted in accordance with §§ 37.16 and 37.18, of this subtitle, respectively, and must be completed on or before January 1, 1999. The HA shall identify locations of deteriorated lead-based paint based upon the visual evaluation and the paint inspection.

(d) *Soil test.* Except for the mutual-help homeownership projects and Turnkey III projects covered under the Indian Housing Program, each HA shall complete a soil test in the public and Indian housing project, even if a paint inspection has indicated that no lead-based paint is present. A soil test must be conducted in accordance with § 37.18 of this subtitle and must be completed on or before January 1, 1999.

(e) *Training.* An individual or firm conducting evaluation other than paint inspection on behalf of an HA shall be trained in lead hazard evaluation. An individual or firm conducting paint inspection shall meet the qualifications set out in § 37.1(b) of this subtitle.

§ 36.280 Interim controls.

Each HA shall conduct interim controls to treat the lead-based paint hazards identified in § 36.278 in accordance with part 37, subpart E, of this subtitle, prior to abatement of these hazards as required in § 36.282. Initial interim controls must begin within 30 days of completing the evaluation requirements described in § 36.278. Interim controls are completed when cleanup and clearance are achieved in accordance with part 37, subparts H and I, of this subtitle.

§ 36.282 Abatement.

Each HA shall abate all lead-based paint and lead-based paint hazards identified in § 36.278 in accordance with part 37, subpart F, of this subtitle. Abatement must be conducted according to the following schedule:

(a) *HAs receiving modernization assistance.* Each HA shall conduct abatement of lead-based paint and lead-based paint hazards during the course of physical improvements conducted under modernization as described in part 968 of this title.

(b) *HAs not receiving modernization assistance.* Each HA shall conduct abatement of lead-based paint and lead-based paint hazards as soon as practicable after the evaluation requirements of § 36.278 are completed. Abatement is completed when cleanup and clearance are achieved in accordance with part 37, subparts H and I, of this subtitle.

§ 36.284 EBL child.

(a) *Hazard evaluation and reduction.* If a child less than 6 years of age living in a public or Indian housing project has an EBL, the HA shall complete a risk assessment in accordance with part 37, subpart B, of this subtitle, within 15 days of notification of the child's EBL. The HA shall conduct reduction of identified lead-based paint hazards in accordance with part 37, subparts E and F, of this subtitle, within 15 days from receipt of the risk assessment report. Hazard reduction activities are completed when cleanup and clearance are achieved in accordance with part 37, subparts H and I, of this subtitle; or

(b) *Relocation.* If a child less than 6 years of age living in a public or Indian housing project has an EBL, the HA may assign the family to a post-1978 or previously evaluated unit (as described in § 36.278) which was found to be free of lead-based paint hazards, or in which such hazards have been abated as described in § 36.282.

(c) *Notice of hazard evaluation and reduction.* The HA shall notify building tenants of any evaluation or hazard reduction activities as described in § 36.276.

(d) *Reporting requirement.* The HA shall report the name and address of an identified EBL child to the State or local health agency.

§ 36.286 Other required practices.

(a) *Required practices.* If hazard reduction is conducted, the following practices are required:

(1) *Occupant protection and worksite preparation* in accordance with part 37, subpart G, of this subtitle.

(2) *Monitoring* in accordance with part 37, subpart J, of this subtitle.

(b) *Control of new hazards.* If monitoring identifies new lead-based paint hazards, each HA shall conduct additional hazard reduction activities in accordance with part 37, subparts E and F, of this subtitle. Hazard reduction is completed when cleanup and clearance are achieved in accordance with part 37, subparts H and I, of this subtitle.

Subpart O—Tenant-Based Rental Assistance

§ 36.290 Purpose and applicability.

(a) *Purpose.* The purpose of this subpart is to establish procedures to eliminate as far as practicable lead-based paint hazards in existing dwelling units where a tenant with a child less than 6 years of age resides and the tenant receives assistance through a tenant-based housing assistance program administered by the Secretary. The tenant-based housing assistance programs are the section 8 tenant-based rental certificate program and the section 8 rental voucher program under section 8 of the United States Housing Act of 1937 (42 U.S.C. 1437f); the HOME Tenant-Based Rental Assistance Program (42 U.S.C. 12701–12840); and Shelter Plus Care Tenant-Based Rental Assistance (42 U.S.C. 11403 *et.seq.*).

(b) *Applicability.* The requirements of this subpart apply to:

(1) All painted surfaces within a dwelling unit constructed before 1978 (including ceilings);

(2) Painted surfaces in the entrance and hallway providing access to a unit;

(3) Exterior painted surfaces up to 5 feet from the floor or ground that are readily accessible to a child under age six including, but not limited to, walls, stairs, decks, porches, railings, windows and doors; and

(4) painted playground equipment and painted boundary fences surrounding a child's exterior play area.

(c) The requirements of this section do not apply to outbuildings such as garages and sheds, or bare soil surrounding the residential property.

§ 36.292 Exemptions.

(a) *Limited paint inspection.* The requirements of §§ 36.296 through 36.302 do not apply for a specific deteriorated paint surface if the owner certifies to the HA that a paint inspection has been completed in accordance with part 37, subparts B or C, of this subtitle, and indicates the absence of lead-based paint on the specific deteriorated paint surface (i.e. lead-free). Results of additional test(s) by a certified paint inspector may be used to confirm or refute a prior finding.

(b) *Abatement of lead-based paint.* An owner shall be exempt from the requirements of §§ 36.296 through 36.302 for a dwelling unit if certification is provided to the HA that the unit has been abated of all lead-based paint in accordance with part 37, subpart F, of this subtitle.

§ 36.294 Lead hazard information pamphlet.

If a tenant resides in a dwelling unit prior to the effective date of the regulation implementing section 1018 of Title X of the Housing and Community Development Act of 1992, and receives Federal assistance under a program described in § 36.290, the HA shall provide the lead hazard information pamphlet developed by the Environmental Protection Agency, pursuant to section 406(a) of the Toxic Substance Control Act, 15 U.S.C. 2686 to the tenant at the next periodic unit inspection required under § 982.405 of this title.

§ 36.296 Residential property constructed before 1950; initial inspections.

(a) *Evaluation.* During the initial inspection required at § 982.305 of this title, a Housing Quality Standards (HQS) inspector trained in lead hazard evaluation shall conduct:

(1) A visual evaluation of all painted surfaces in order to identify deteriorated paint; and

(2) Dust testing in accordance with § 37.16 of this subtitle to determine the presence of lead in dust.

(b) *Paint repair and cleanup.* The owner shall repair each deteriorated paint surface and conduct cleanup in accordance with part 37, subpart D, of this subtitle before occupancy of a vacant dwelling unit or, where a unit is occupied, within 30 days of notification of the results of the visual evaluation. If the dust testing required in paragraph (b)(2) of this section identifies the presence of lead-contaminated dust, the owner shall conduct cleanup of the horizontal surfaces in the room, dwelling unit or common areas where the lead-contaminated dust is located. If the dust testing indicates the absence of lead-contaminated dust, the owner shall conduct cleanup of the worksite.

§ 36.298 Residential property constructed before 1950; periodic inspections.

(a) *Visual evaluation.* During the periodic inspection required at § 982.405 of this title, an HQS inspector trained in lead hazard evaluation shall conduct a visual evaluation of all painted surfaces in order to identify deteriorated paint.

(b) *Paint repair and cleanup.* The owner shall repair each deteriorated paint surface and conduct cleanup of the worksite in accordance with part 37, subpart D, of this subtitle, within 30 days of notification of the results of the visual evaluation.

§ 36.300 Residential property constructed after 1949 and before 1978; initial and periodic inspections.

(a) *Visual evaluation.* During the initial and periodic inspections required at §§ 982.305 and 982.405 of this title, an HQS inspector trained in lead hazard evaluation shall conduct a visual evaluation of all painted surfaces in order to identify deteriorated paint.

(b) *Paint repair and cleanup.* The owner shall repair each deteriorated paint surface and conduct cleanup of the worksite, in accordance with part 37, subpart D, of this subtitle, within 30 days of notification of the results of the visual evaluation.

§ 36.302 EBL child.

(a) *Risk assessment and interim controls.* If a child less than 6 years of age living in a dwelling unit where the family receives Federal assistance has an EBL, the owner shall complete a risk assessment in accordance with part 37, subpart B, of this subtitle within 15 calendar days of notification of the child's EBL. The owner shall conduct interim controls of identified lead-based paint hazards in accordance with part 37, subpart E, of this subtitle, within 15 calendar days from receipt of the risk assessment report. Interim controls are completed when cleanup and clearance are achieved in accordance with part 37, subparts H and I, of this subtitle.

(b) *Data collection and recordkeeping responsibilities.* To the extent practicable, the HA or the administering agency shall attempt to obtain annually from the State or local health agency the names and addresses of children less than age six with identified EBLs. The HA or the administering agency shall annually match this information with the names and addresses of families

receiving Federal assistance under a program described in § 36.290. If a match occurs, the HA or the administering agency shall require a risk assessment and interim controls in accordance with § 36.302(a).

PART 37—STANDARDS AND METHODS FOR LEAD-BASED PAINT HAZARD EVALUATION AND REDUCTION ACTIVITIES IN FEDERALLY OWNED RESIDENTIAL PROPERTIES AND HOUSING RECEIVING FEDERAL ASSISTANCE

Subpart A—General Requirements

Sec.
37.1 Purpose and applicability
37.2 Definitions.
37.4 Reference.
37.6 Laboratory analysis.

Subpart B—Risk Assessment

37.10 Unit selection.
37.12 Requirements for risk assessments.
37.14 Requirements for testing paint for a risk assessment.
37.16 Requirements for dust testing.
37.18 Requirements for testing potential soil hazards.

Subpart C—Paint Inspection

37.30 Paint inspection methods.
37.32 Paint inspection of single-family and small multifamily residential properties.
37.34 Paint inspection of multifamily property.
37.36 Paint inspection report.

Subpart D—Paint Repair

37.50 Requirements.

Subpart E—Interim Controls

37.60 Purpose and applicability.
37.62 Supervision of interim control workers.
37.64 General requirements.
37.66 Requirements for paint stabilization controls.
37.68 Requirements for friction and impact surface interim controls.
37.70 Requirements for lead-contaminated dust control.
37.72 Requirements for lead-contaminated bare soil interim controls.

Subpart F—Abatement

37.80 Requirements for abatement of lead-based paint or lead-based paint hazards.
37.82 Soil abatement.

Subpart G—Occupant Protection and Worksite Preparation

37.90 Purpose and applicability.
37.92 Requirements for occupant protection.
37.94 Worksite preparation.

Subpart H—Cleanup

37.110 Purpose and applicability.
37.112 Requirements for daily cleanup.
37.114 Requirements for final cleanup.

Subpart I—Clearance

37.120 Purpose and applicability.
37.122 General requirements.
37.124 Unit selection.
37.126 Requirements for visual examination.
37.128 Requirements for dust testing.
37.130 Required actions for dwelling units and common areas that fail dust tests.
37.132 Requirements for soil testing.
37.134 Required actions for properties that fail soil tests.

Subpart J—Monitoring

37.140 Exemptions.
37.142 General requirements.
37.144 Visual survey.
37.146 Reevaluation.

Authority: 42 U.S.C. 3535(d) and 4822.

Subpart A—General Requirements

§ 37.1 Purpose and applicability.

(a) This part provides standards and methods for lead-based paint activities required in part 36 of this subtitle.

(b) Paint inspection, risk assessment, and abatement activities, including clearance examinations, shall be performed by paint inspectors, risk assessors and abatement supervisors and workers certified in accordance with EPA regulations at 40 CFR 745.226 (implementing sections 402 and 404 of TSCA (as amended by section 1021 of the Lead-Based Paint Hazard Reduction Act of 1992, 15 U.S.C. 2681 *et seq.*). When paint inspectors, risk assessors and abatement supervisors and workers are not certified in accordance with 40 CFR 745.226, the applicable requirements set forth in this part 37 shall apply. The Secretary may also establish temporary qualifications for paint inspectors, risk assessors, and abatement supervisors and workers, if it is determined that the number of certified personnel is insufficient. With respect to the standards and methods for lead-based paint hazard evaluation and reduction activities that are not included in 40 CFR 745.226, the applicable requirements set forth in this part 37 shall apply.

§ 37.2 Definitions.

Definitions of terms used in this part are found in § 36.3 of this subtitle.

§ 37.4 Reference.

Further information regarding lead-based paint hazard evaluation and reduction activities described in this part 37 is contained in the HUD Guidelines for the Evaluation and Control of Lead-Based Paint Hazards in Housing (June 1995). For information on obtaining copies of these guidelines, contact HUD's Office of Lead-Based Paint Abatement and Poisoning Prevention, 451 Seventh Street, SW, Room B–133, Washington, DC 20410.

§ 37.6 Laboratory analysis.

All laboratories performing analyses of lead in paint, dust, and soil under these regulations shall be accredited by the U.S. Environmental Protection Agency's National Lead Laboratory Accreditation Program (NLLAP). Paint samples must be analyzed in accordance with the requirements of the Environmental Lead Proficiency Analytical Testing Program (ELPAT).

Subpart B—Risk Assessment

§ 37.10 Unit selection.

(a) *Risk assessments of five or more similar dwelling units.* (1) For risk assessments involving five or more similar dwelling units, the risk assessor may perform the risk assessment using a sample of dwelling units. The units in the sample shall be selected in accordance with:

(i) The targeted sampling requirements established by this section; or

(ii) The random sampling requirements established in subpart C of this part.

(2) Any common areas servicing the dwelling units in the sample shall be evaluated in the risk assessment, as well as the surrounding land belonging to the residential property owner.

(3) Any dwelling unit occupied by a child with an elevated blood level shall be excluded from the minimum number of units to be sampled unless units occupied by an EBL child are needed to make up the necessary unit sample size. All units occupied by an EBL child must be investigated in accordance with the requirements of part 36 of this subtitle.

(b) *Risk assessments of less than five dwelling units or of 5 or more dwelling units that are not similar.* For risk assessments of less than 5 dwelling units or of five or more dwelling units that are not similar, the risk assessment shall evaluate each dwelling unit, any common areas, and any surrounding land belonging to the owner.

(c) *Targeted samples.* To obtain a targeted sample of dwelling units, individual units shall be selected in accordance with the following procedures:

(1) Determine the minimum number of dwelling units to be sampled according to Table 1—Minimum Number of Targeted Dwelling Units to Sample Among Similar Dwelling Units.

(2) Rank dwelling units by the following criteria which are listed in order of priority:

(i) Dwelling units cited for housing or building code violations within the past year.

(ii) Dwelling units that the owner designates are in poor condition.

(iii) Dwelling units that contain two or more children between the ages of six months and 6 years with preference given to dwelling units housing the largest number of children.

(iv) Dwelling units that serve as day care facilities.

(v) Dwelling units prepared for reoccupancy within the past three months.

(3) Select dwelling units to meet as many of the criteria as possible.

(i) The risk assessor shall select at least one but not more than four dwelling units that have recently been prepared for reoccupancy, if possible.

(ii) If additional dwelling units are required to meet the minimum sampling number, the risk assessor shall select them randomly.

(iii) If there are many dwelling units that satisfy the same criteria, those with the largest number of children of less than 6 years of age shall be selected.

TABLE 1.—MINIMUM NUMBER OF TARGETED DWELLING UNITS TO SAMPLE AMONG SIMILAR DWELLING UNITS*

Number of similar dwelling units	Number of dwelling units to sample
1–4	All.
15–20	4 units or 50% (whichever is greater).**
21–75	10 units or 20% (whichever is greater).**
76–125	17.
126–175	19.
176–225	20.
226–300	21.
301–400	22.
401–500	23.
501+	24 + 1 for each additional increment of 100 dwelling units or less.

*Does not include dwelling units with EBL children.

**For percentages, round up to determine number of dwelling units to be sampled.

§ 37.12 Requirements for risk assessments.

(a) *General.* (1) Risk assessments shall be conducted in accordance with procedures described in this section. The objectives of a risk assessment are to:

(i) Identify and report on the existence, nature, severity, source, and location of lead-based paint hazards or document that no such hazards have been identified; and

(ii) Identify and report acceptable methods for controlling lead-based paint hazards that are identified, including interim control and abatement measures.

(2) The scope of the risk assessment shall include the worksite, and dwelling units and common areas selected in accordance with § 37.10.

(b) *Visual assessment.* The risk assessor shall perform a visual assessment of the selected dwelling units, common areas, exterior building surfaces and any surrounding land belonging to the owner to identify potential lead-based paint hazards, as follows:

(1) If prior paint inspection reports are available, risk assessors shall consider whether the past paint inspection conformed to current standards. If the prior paint inspection is determined to be reliable and complete, the risk assessor is only required to visually assess surfaces that have been determined to contain lead-based paint. If a paint inspection has not been completed or if the risk assessor determines that the paint inspection report is or may be unreliable, painted surfaces shall be assumed to contain lead-based paint unless tests performed in accordance with the requirements of § 37.14 show that the paint's lead concentration does not exceed the applicable standards.

(2) The risk assessor shall identify any deteriorated paint surfaces and assess the extent of the deterioration. Based on the extent of the deterioration observed, the risk assessor shall rate the paint film condition of each deteriorated surface as intact, fair, or poor using the standards presented in Table 2: Categories of Paint Film Condition.

TABLE 2.—CATEGORIES OF PAINT FILM CONDITION

Type of building component*	Size of affected surface area		
	Intact	Fair	Poor
Exterior components with large surface areas.	Entire surface is intact.	Less than or equal to 10 square feet nonintact.	More than 10 square feet nonintact.
Interior components with large surface areas (walls, ceilings, floors, doors).	Entire surface is intact.	Less than or equal to 2 square feet nonintact.	More than 2 square feet nonintact.
Interior and exterior components with small surface areas (window sills, baseboards, soffits, trim).	Entire surface is intact.	Less than or equal to 10 percent of the total surface area of the component nonintact.	More than 10 percent of the total surface area of the component nonintact.

*Building component in this table refers to each individual component or side of building, not the combined surface area of all similar components in a room (e.g., a wall with one square foot of deteriorated paint is in ''fair'' condition, even if the other 3 walls in a room have no deteriorated paint).

(3) The risk assessor shall identify any painted surfaces where the component has been chewed or mouthed by a child. Painted surfaces where there is clear evidence of teeth marks or that are identified by residents as having been chewed or mouthed by children are examples of such evidence.

(4) The risk assessor shall identify any painted surfaces that are subject to friction or impact such as windows, doors, stair treads, or floors.

(5) The risk assessor shall identify potential soil hazards on the residential property. Potential soil hazards are:

(i) Any large soil in play areas, including sand boxes; and

(ii) Bare soil in areas other than play areas (such as soil along the building foundation or drip line, vegetable gardens, pet sleeping areas, bare dirt pathways) that totals more than 9 square feet per property.

(6) The risk assessor shall examine buildings and the worksite for structural deficiencies or conditions that contribute to observed paint deterioration and other potential lead-based paint hazards. Deterioration in the roof that results in water leaks is an example.

(c) *Evaluation of potential lead-based paint hazards.* (1) The risk assessor shall determine if deteriorated paint surfaces in poor condition and chewed paint surfaces identified during the visual assessment are lead-based paint hazards.

(i) Such surfaces known or assumed to contain lead-based paint shall be considered lead-based paint hazards, except that intact factory applied prime coatings on metal surfaces shall not be considered lead-based paint hazards.

(ii) Such surfaces tested in accordance with the requirements of § 37.14 that have a lead concentration equal to or exceeding 1.0 mg/cm2 (one milligram per square centimeter) or 0.5 percent by weight (5000 parts per million) shall be considered lead-based paint hazards.

(iii) Surfaces in fair condition do not constitute lead-based paint hazards, but may become hazardous in the future. Risk assessors shall recommend that such surfaces be repaired.

(2) Dust tests of all selected dwelling units and common areas shall be performed in accordance with § 37.16 to determine if lead-contaminated dust is present. If either the single surface or composite test results for any room, room equivalent, unit, or common area exceed the following standards, a lead-based paint hazard exists in that room, room equivalent, dwelling unit or common area due to the presence of lead-contaminated dust:

(i) Hard floors—100 ug/ft.^{2} (micrograms of lead per square foot).

(ii) Carpeted floors—100 ug/ft.^{2} (micrograms of lead per square foot).

(iii) Interior window sills—500 ug/ft.^{2} (micrograms of lead per square foot).

(3) If a potential soil hazard is identified during a visual assessment of the worksite, soil tests shall be performed in accordance with § 37.18. If the test results exceed the following standards, the bare soil in these areas shall be considered lead-contaminated:

(i) 400 ug/g (micrograms of lead per gram of soil) in play areas and sand boxes.

(ii) 2,000 ug/g (micrograms of lead per gram of soil) in other areas.

(d) *Evaluation of potential lead-based paint hazards when targeted sampling of units is used.* (1) If a targeted sampling of dwelling units was used to evaluate paint, the results of the paint evaluation shall be analyzed by component and location, as follows:

(i) If all sampled components at a given location (for example, all hallway baseboards or all bathroom walls) exceed the standard or all are below the standard, the risk assessor shall conclude that this condition is true for the total population of similar dwelling units, common areas, and exterior surfaces.

(ii) If a component contains lead-based paint in some dwelling units and not in others, the risk assessor shall conclude that all similar components constitute a hazard, unless a paint inspection is completed in every dwelling unit, common area, or exterior surface, in accordance with the requirements of subpart C of this part.

(2) If targeted sampling was used to evaluate dust, the risk assessor shall calculate the arithmetic mean of the results for each type of component (floors and window sills) by room type. If the mean dust level for a component in the targeted dwelling units exceeds the standard all of the components represented by the sample constitute a hazard in all dwelling units except those components with negative results. If the mean is below the standard, but some of the individual sample results exceed the standard, only those individual surfaces constitute a hazard, and the risk assessor shall use professional judgment to determine if additional testing is necessary for those components in the untested units of the sample.

(e) *Identify acceptable lead hazard control options.* Using information on existing hazards and the condition of the building, the risk assessor shall identify acceptable lead-based paint hazard control methods.

(f) *Report.* The risk assessor shall prepare a final report documenting the findings of the risk assessment in accordance with the requirements of 40 CFR part 745.228.

§ 37.14 Requirements for testing paint for a risk assessment.

(a) *General.* Deteriorated paint in poor condition or chewed surfaces in a dwelling unit or a common area shall be tested according to the following procedures. Paint testing is optional for intact paint on friction and impact surfaces; it is not required:

(b) *X-ray fluorescence (XRF) testing.* An XRF analyzer may be used to test the lead concentration of a painted surface, unless the surface is not suitable for this method of analysis. The use of an XRF analyzer to test a painted surface shall be performed in accordance with the requirements of subpart C of this part.

(c) *Testing of paint chip samples.* A surface may also be tested for lead-based paint by laboratory analysis of paint chip samples in accordance with the following requirements. Paint chip samples must be collected after dust sampling is completed to minimize the possibility of cross sample contamination.

(1) One paint chip sample shall be collected in each sampled dwelling unit to represent each component with deteriorated or chewed surfaces, both interior and exterior.

(2) Composite sampling of paint chips is permitted as follows, but compositing shall not occur across different components:

(i) No more than five subsamples shall be used.

(ii) Each sample shall be composited in the laboratory.

(iii) The lead-based paint standard shall be divided by the number of subsamples contained in the composite sample to determine if any subsample could exceed the standard.

§ 37.16 Requirements for dust testing.

(a) *General.* Risk assessors and others required to conduct dust testing shall test for lead-contaminated dust in dwelling units and common areas in accordance with the procedures described in this section.

(b) *Number and location of dust samples within dwelling units.* (1) Dust testing within dwelling units shall be conducted by collecting either composite or single-surface wipe samples.

(2) The same room/component combination shall not be sampled twice. For example, if the principal play area (identified pursuant to § 37.16(b)(3)(ii)) is the kitchen, a substitute must be selected for the required sample of an interior window sill in the kitchen.

(3) If single-surface dust sampling is used, a minimum number of six locations per dwelling unit shall be sampled, three floors and three interior window sills from the following specific locations:

(i) The floor and an interior window sill of the bedroom of the youngest child six months of age or more. If there are no children living in the dwelling unit or if the dwelling unit is vacant, the samples shall be collected from the room that would likely be the bedroom of the youngest child six months of age or more (usually the smallest bedroom).

(ii) The floor and an interior window sill of the principal play area of the youngest child six months of age or more other than his or her bedroom. If there are no children living in the dwelling unit or if the dwelling unit is

vacant, the samples shall be collected from the room that would likely be the play room of the youngest child six months of age or more. If there is no window in the sampled play room, a sample shall be collected from the interior window sill of another room that would likely be frequented by the youngest child six months of age or more.

(iii) The floor of the principal entryway. If the principal entryway is not distinguishable from the sampled play area or the sampled bedroom, the sample shall be collected from the floor of another high-traffic area (such as the living room, family room, TV room, dining area, or kitchen) that is distinguishable from the sampled play room or the sampled bedroom.

(iv) An interior window sill sample from the kitchen. If there is no window in the kitchen, the sample shall be collected from an interior window sill in the dining area or another room likely to be frequented by the youngest child six months of age or more.

(4) If composite sampling is used, a minimum number of eight locations per dwelling unit shall be sampled, four floors and four interior window sills. The location of six of these samples shall be determined in accordance with the requirements of paragraph (b)(3) of this section. The other two samples shall be collected from the floor and an interior window sill of the bedroom of the next oldest child six months of age or more.

(c) *Number and location of dust samples in common areas.* Dust samples shall be collected from the following locations in common areas:

(1) In multifamily buildings of four stories or less, one sample from the entry area floor and one from the floor of the first landing of a common stairway or from the first floor hallway. If there is a hallway window that is frequently used, the risk assessor shall collect a sample from the interior window sill and substitute this sample for the floor sample from the first landing or hallway.

(2) In multifamily buildings higher than four stories, one sample each from the hallway of every fourth floor and one each from the stairways between every fourth floor.

(3) In on-site community buildings, day care centers, or other buildings frequented by children, dust sampling shall be completed in accordance with the following:

(i) For spaces up to 2000 square feet, collect two dust samples from widely separated locations in high traffic areas used by or accessible to children, and one dust sample from an interior window sill.

(ii) For spaces over 2000 square feet, collect one additional floor sample for each increment of 2000 square feet, and one additional sample of an interior window sill for each additional increment of 2000 square feet.

(iii) In the building's management office, one dust sample shall be collected from the floor of the resident waiting area; two dust samples shall be collected if the area is more than 400 square feet.

(d) *Selection of specific sampling locations on floors and interior window sills.* Specific dust sampling locations shall be determined as follows:

(1) *Floors:* Select hard floor surfaces that are reasonably accessible. If hard floor surfaces are not available, select carpeted surfaces. If there are friction or impact surfaces in the room select a floor location near the friction or impact surface that is most likely to be generating lead contaminated dust. If there are no friction or impact surfaces but there is visible floor dust, select one or more dusty locations accessible to children if 6 to 59 months of age. If none of these conditions are present, select the highest traffic area in the room.

(2) *Interior window sills:* Select windows that are frequently opened especially those most frequently contacted by children. If children's use patterns are unknown, select windows that have friction surfaces. If none of these conditions are present, select randomly.

(3) *Common areas:* Select floor locations in a high traffic area and window sill locations at windows that are frequently operated.

(e) *Sample collection procedure.* (1) Additional information concerning these procedures is contained in the HUD Guidelines.

(2) Wet wipes shall be used to collect all dust samples.

(3) If composite sampling is used, samples shall be composited according to the following requirements:

(i) Separate composite samples are required from each different type of component sampled. For example, subsamples from both floors and window sills shall not be combined into a single composite sample. Subsamples from both carpeted and hard floors may be combined in a single sample.

(ii) Separate composite samples are required for each dwelling unit.

(iii) The surface areas of subsamples shall be the same size.

(iv) The same dust wipe shall not be used to sample two different locations.

(v) A maximum of four dust wipe subsamples shall be placed in a single container for a composite sample.

(4) One blank dust wipe sample must be sent to the laboratory for every 25 dust wipe samples, or less if fewer than 25 dust wipe samples are used. If composite samples are used, the blank dust wipe sample shall consist of four dust wipe samples inserted into a single container. For single surface samples one blank dust wipe sample shall be inserted into the container. Spiked field samples are not required.

(5) All samples shall be submitted to an EPA recognized laboratory for analysis.

§ 37.18 Requirements for testing potential soil hazards.

(a) *General.* The risk assessor and others required to conduct soil testing shall collect and submit samples of bare soil in the yard. Except for play areas, sampling is not required unless other bare soil areas total more than 9 square feet.

(b) *Selecting areas to sample.* One composite sample shall be collected from the child's principal play area if it exists and one composite sample from the front or back yard and/or a sample from along the foundation drip line.

(c) *Sampling procedures.* The risk assessor and others required to conduct soil testing shall use the following procedures to collect the soil samples:

(1) Each sample shall consist of equal soil subsamples taken from the top one-half inch (1 centimeter) of soil at three to ten locations equidistant from each other. For samples taken from along the foundation, subsamples shall be collected 2 to 6 feet from each other.

(2) The yard and the foundation drip line subsample may be combined into a single composite sample, but the subsamples from the principal play area shall be composited as a single sample.

(3) If paint chips are present in the soil they shall be included as part of the soil sample.

Subpart C—Paint Inspection

§ 37.30 Paint inspection methods.

The lead content of paint on components being inspected shall be tested by using portable X-ray fluorescence analyzer (XRF), in combination with:

(a) Laboratory analysis of paint chip samples in accordance with the requirements of § 37.6; or

(b) Other methods approved by the Secretary.

§ 37.32 Paint inspection of single-family and small multifamily residential properties.

The following requirements shall apply to paint inspections of single-family and multifamily residential properties of fewer than 20 units.

(a) Paint inspections shall be performed on all testing combinations on the residential property that are coated with paint, varnish, shellac, stain, or other coating, including those that have been coated and covered with wallpaper, except components known to have been replaced after 1980. Limited paint inspections shall be performed in accordance with the requirements of this subpart on all testing combinations to be disturbed during rehabilitation activities. Examples of testing combinations are shown in the chart at the end of this paragraph.

EXAMPLES OF A FEW TESTING COMBINATIONS

Room equivalent	Component	Substrate	Color
Bedroom	Door	Wood	Brown.
Kitchen	Wall	Plaster	Green.
Garage	Floor	Concrete	Red on black.
West side of house	Siding	Wood	White.
Exterior area playground	Swing set	Metal	Orange.

(b) *XRF Testing protocol.* (1) XRF testing shall be accomplished according to the instrument manufacturer's instructions and shall include quality control procedures, except that substrate corrections inconclusive ranges and calibration shall be made in accordance with the HUD/EPA Performance Characteristics Sheet for the XRF model being used.

(2) Paint inspections shall include the analysis of each testing combination on the residential property. One XRF reading shall be taken at three different test locations on each testing combination. The test locations shall be representative of the testing combination including all layers of paint, and be a sufficient distance from pipes or electrical outlets to avoid interference. If testing combinations are replicated, (i.e. three windows in the same room) the selection of test locations shall include a location on up to three replicates. If acceptable test locations cannot be found for XRF testing, a paint chip sample shall be collected for laboratory analysis.

(3) An average of the three readings taken on different parts of the component shall be computed for each testing combination. That average, corrected for substrate interference if necessary, shall determine the classification of the testing combination as positive, negative, or inconclusive regarding the presence of lead-based paint. The positive, negative, and inconclusive ranges for XRF testing shall be determined based on the HUD/EPA Performance Characteristics Sheets of the model of XRF being used.

(4) A paint chip sample shall be collected for laboratory analysis from all testing combinations that test inconclusive.

(5) Test results of 1.0 milligram of lead per square centimeter (1.0 mg/cm^2) or greater or 0.5 percent of lead by weight or greater shall be considered positive. All other results shall be considered negative.

§ 37.34 Paint inspection of multifamily property.

(a) In a multifamily property of less than 20 units all units must be inspected in accordance with the requirements of § 37.2. In a multifamily property of 20 or more units, a random sample of units shall be inspected in accordance with the following table:

NUMBER OF UNITS TO BE INSPECTED IN A MULTIFAMILY PROPERTY

Number of units in building or group of similar buildings	Number of units to be tested
20–26	20
27	21
28	22
29–30	23
31	24
32	25
33–34	26
35	27
36	28
37	29
38–39	30
40–50	31
51	32
52–53	33
54	34
55–56	35
57–58	36
59	37
60–73	38
74–75	39
76–77	40
78–79	41
80–95	42
96–97	43
98–99	44
100–117	45
118–119	46
120–138	47
139–157	48
158–177	49
178–197	50
198–218	51
219–258	52
259–299	53
300–379	54
380–499	55
500–776	56
777–1004	57
1005–1022	58
1023–1039	59
1040 or more	5.8 percent of the units.

(b) Paint inspections shall be completed on testing combinations in the selected units in accordance with the requirements of § 37.32(c) except that only one XRF reading is required on each testing combination as long as a minimum of 40 readings per testing combination will be obtained in each development. Each common area accessible to children less than 6 years of age, (i.e. lobby, laundry room) is considered a room equivalent and shall be tested.

(c) A minimum of 40 components, if possible, of a given type shall be tested within the total of all of the multifamily dwelling units being tested.

(d) *Test results.* Lead-based paint is considered to be present throughout the development on a given component if 15 percent or more of the tested components are positive. Lead-based paint is not present if 100 percent of the tested components are negative or if 100 percent of the tested components are either negative or, if in the inconclusive range, below 1.0 mg/cm^2. All other cases require confirmatory laboratory testing. If any laboratory results are 1.0 mg/cm^2 or greater or 0.5 percent by weight or greater a positive result is indicated. Test results below these standards are negative. If less than 1

percent of similar components are positive, the results shall be negative for that component. In this case, the few components that are positive shall be monitored and/or controlled. If laboratory test results conflict with XRF results, the laboratory test results shall be used.

§ 37.36 Paint inspection report.

A written paint inspection report shall be provided to the owner in accordance with the requirements of 40 CFR 745.228.

Subpart D—Paint Repair

§ 37.50 Requirements.

(a) *De minimis level.* Paint repair is required if the area of the deteriorated paint surface is more than:

(1) Ten square feet on an exterior wall;

(2) Two square feet on a component with a large surface area other than an exterior wall including, but not limited to, interior walls, ceilings, floors and doors; or

(3) Ten percent of the total surface area on an interior or exterior component with a small surface area including, but not limited to, window sills, baseboards, and trim.

(b) *Protective coverings.* Before starting paint repair, protective coverings shall generally extend a minimum of 5 feet out in all directions from the surfaces being worked on to protect the floor or ground from contamination.

(c) *Occupant protection.* If units are occupied while undergoing paint repair, occupants and their belongings shall be protected from lead-based paint hazards associated with paint repair. Occupant relocation is not required. Occupants must not enter spaces undergoing paint repair until cleanup is completed. Personal belongings that are in work areas must be relocated or otherwise protected from contamination. During interior paint repair involving more than 2 square feet of deteriorated paint in a room, dust must be contained to the room or work area by installing an airlock flap or comparable device. To avoid temporary relocation, an individual or firm conducting paint repair shall ensure that occupants have safe uncontaminated access to sleeping areas, bathroom and kitchen facilities, and entryways after work hours. Work areas shall be secured against entry during non working hours.

(d) *Surface preparation.* Before repainting deteriorated paint surfaces, all loose paint and other material shall be removed from the surfaces to be treated, as follows:

(1) Acceptable methods for preparing the surface include wet scraping, and wet sanding. Dry scraping or manual or power sanding are acceptable if performed in conjunction with a HEPA vacuum filter attachment to the tool operated according to the manufacturer's instructions.

(2) Dry scraping/sanding unassisted with HEPA shall be used only when wet scraping/sanding cannot be performed safely, such as when preparing surfaces near electrical circuits.

(3) Before repainting the prepared surface, it shall be cleaned to remove dust, paint chips, and surface contaminants that may prevent proper adhesion of paint coatings.

(e) *Prohibited methods of paint removal.* The paint removal methods specified in § 37.80(b) shall not be used to remove paint known or suspected to be lead-based paint. All paint that has not been tested must be assumed to be lead-based paint.

(f) *Repainting.* Paint repair shall include the application of new paint. All paint shall be applied in accordance with the manufacturer's recommendations.

(g) *Modified Cleanup.* (1) *General.* Modified cleanup is acceptable in units where only paint repair has occurred, and shall not begin until one hour after paint repair has been completed.

(2) *Required practices.* Modified cleanup shall include the following practices:

(i) The protective coverings shall be carefully removed to control the spread of dust;

(ii) All hard, interior uncarpeted surfaces in the area of the repair shall be wet washed with a lead specific detergent or equivalent. Floors within at least 10 feet of the repaired surface shall be wet washed. For all other surfaces to be cleaned, wet washing must generally extend a minimum of 5 feet in all directions from the repaired surface and shall include walls, window sills and other horizontal surfaces excluding ceilings, unless they have been repaired. Cleanup of adjacent rooms is not required, except where paint repair has occurred at or near door openings to those rooms; and

(iii) If the floor is carpeted it shall be cleaned with a HEPA vacuum equipped with a beater-bar, if available. If a HEPA vacuum is not available, a standard vacuum cleaner shall be used with a high efficiency filter bag, if available.

(h) *Waste handling.* Waste from paint repair shall be enclosed in a way that will prevent recontamination of the interior or exterior of the residential property.

Subpart E—Interim Controls

§ 37.60 Purpose and applicability.

Interim control measures include paint stabilization, treatments for friction and impact surfaces, dust control, and lead-contaminated soil control. Interim controls may be performed in combination with more extensive, permanent abatement methods.

§ 37.62 Supervision of interim control workers.

Workers performing interim control treatments shall be trained in accordance with 29 CFR 1926.59 and supervised by an abatement supervisor certified in accordance with 40 CFR 745.226. The Secretary may establish temporary alternative qualifications for interim control supervisors if it is determined that the supply of certified abatement supervisors is insufficient.

§ 37.64 General requirements.

(a) *Acceptable methods identified by risk assessor.* If a risk assessment has been performed, only those interim control methods identified as acceptable methods in the risk assessment report shall be used to control identified hazards.

(b) *Prohibit methods of paint removal.* The paint removal methods specified in § 37.80(b) shall not be used.

(c) *Occupant protection.* Occupants of dwelling units where interim controls are being performed shall be protected during the course of the work in accordance with the requirements of subpart G of this part.

§ 37.66 Requirements for paint stabilization controls.

(a) *General.* Interim control treatments used to stabilize deteriorated lead-based paint on surfaces other than friction or impact surfaces shall be performed in accordance with the requirements of this section. Interim control treatments of intact, factory applied prime coatings on metal surfaces are not required. Finish coatings on such surfaces shall be treated by interim controls if required by these regulations.

(b) *De minimis level.* Interim controls are required if the area of the deteriorated paint surface is more than:

(1) Ten square feet on an exterior wall;

(2) Two square feet on a component with a large surface area other than an exterior wall including, but not limited to, interior walls, ceilings, floors and doors; or

(3) Ten percent of the total surface area on an interior or exterior component with a small surface area

including, but not limited to, window sills, baseboards and trim.

(c) *Repair substrate.* Physical defects in the substrate or component that threaten the integrity of the stabilization treatment shall be permanently repaired, as follows, prior to treating the surface. Examples of defective substrate conditions include: dry-rot, rust moisture, crumbling plaster, missing hardware, and siding or other components that are not securely fastened:

(1) If a current risk assessment or paint inspection has been performed, all physical defects in the substrate of surfaces with deteriorated lead-based paint that are listed in the risk assessment report shall be repaired.

(2) If no information on lead content is available, all readily observable substrate defects in surfaces with deteriorated paint shall be corrected.

(d) *Surface preparation.* (1) Before recoating deteriorated paint, all loose paint and other material shall be removed from the surface to be treated. Acceptable methods for preparing the surface to be treated include wet scraping, wet sanding, and power sanding performed in conjunction with a HEPA vacuum filter attachment operated according to manufacturer's instructions.

(2) Dry scraping/sanding shall be used only when wet scraping/sanding cannot be performed safely, such as when preparing surfaces near electrical circuits.

(e) *Surface cleaning.* Before applying protective coatings to the prepared surface, the surface shall be cleaned to remove dust, paint chips, and surface contaminants that may prevent proper adhesion of coatings. Any paint remaining on the surface shall be deglossed if necessary to ensure proper adhesion of coatings.

(f) *Coating the deteriorated paint.* Paint stabilization shall include the application of a new protective coating. The surface substrate shall be dry and protected from future moisture damage prior to application of a protective coating. All protective coatings shall be applied in accordance with the manufacturer's recommendations.

§ 37.68 Requirements for friction and impact surface interim controls.

(a) *General.* Interim control treatments used to control lead-based paint on friction or impact surfaces shall be performed in accordance with the requirements of this section.

(b) *Affected components.* Building components that may contain friction or impact surfaces include the following: window systems; doors; stair treads and risers; baseboards and outside corners; drawers and cabinets; and porches, decks, interior floors, and any other painted surfaces that are abraded, rubbed, or impacted.

(c) *Treatments for friction surfaces.* Interim control treatments for friction surfaces with lead-based paint shall eliminate friction points or treat the friction surface so that lead-based paint is not subject to abrasion. Examples of acceptable treatments include rehanging and/or planing doors so that the door does not rub against the door frame, and installing window channel guides that reduce or eliminate abrasion of painted surfaces. Lead-based paint on stair treads and floors shall be protected with a durable cover or coating that will prevent abrasion of the painted surfaces. Examples of acceptable materials include carpeting, tile, sheet flooring and some encapsulants.

(d) *Treatments for impact surfaces.* (1) Interim control treatments for impact surfaces with lead-based paint shall protect the lead-based paint on the surface from impact. Acceptable methods include:

(i) Treatments that eliminate impact with the lead-based paint surface, such as a door stop to prevent a door from striking a wall or baseboard covered with lead-based paint.

(ii) Treatments that cover the lead-based paint surface with a material that protects the paint from impact, such as installing plastic corner strips or corner beads to protect an outside corner covered by lead-based paint from impact.

(2) Covering an impact surface with a coating or other treatment that fails to protect lead-based paint from impact or abrasion, such as painting over the surface, shall not constitute an interim control for impact or friction surfaces.

§ 37.70 Requirements for lead-contaminated dust control.

(a) *General.* Interim control treatments used to control lead-contaminated dust shall be performed in accordance with the requirements of this section. If a risk assessment was performed, dust control shall be accomplished in locations specified for dust removal in the risk assessment report. If no risk assessment was performed, dust control shall be accomplished in rooms, dwelling units, or common areas assumed to have lead-contaminated dust.

(b) *Surfaces to be cleaned.* Dust control shall involve a thorough cleaning of all horizontal surfaces in the affected room, dwelling unit, or common area.

(c) *HEPA vacuuming.* Horizontal surfaces in the dust removal area shall be cleaned by first HEPA vacuuming these surfaces until surface dust is no longer visible.

(d) *Wet cleaning.* After all horizontal surfaces in the dust removal area have been HEPA vacuumed, all hard horizontal surfaces shall be wet cleaned with a lead-specific detergent solution or equivalent.

(e) *Surfaces covered by carpeting or rugs.* (1) The floor surface under rugs and carpeting shall be HEPA vacuumed where feasible.

(2) Rugs and unattached carpets located in areas of the dwelling unit with lead-contaminated floor dust shall be HEPA vacuumed on both sides. If rugs or carpets will be removed from the dwelling for off-site cleaning, workers shall take protective measures to prevent the spread of dust during the removal of these materials. For example, rugs, carpets, and padding can be misted to reduce dust generation during removal and the items being removed can be wrapped and sealed before removal from the work area.

(3) Attached carpets that are identified as hazards shall be HEPA vacuumed, cleaned, or replaced. Floors under such carpets are not required to be vacuumed.

(f) *Work practices.* Dust removal shall begin on the horizontal surfaces in the top rear room in the dwelling or common area and proceed forward and down through the work area.

§ 37.72 Requirements for lead-contaminated bare soil interim controls.

(a) *General.* Interim control treatments of lead-contaminated soil shall be performed in accordance with the requirements of this section:

(1) Interim control treatments shall be used only to control lead-contaminated bare soil that does not contain a lead concentration greater than 5,000 ug/g (micrograms per gram). In children's play areas interim controls are the minimum requirement for soil lead concentrations from 400 to 5000 ug/g. In other areas interim controls are the minimum requirement for soil lead concentrations from 2000 to 5000 ug/g.

(2) Soil with a lead concentration greater than 5,000 ug/g of lead shall be abated in accordance with the requirements of subpart F of this part.

(b) Acceptable interim control methods for lead-contaminated soil are impermanent surface coverings and land use controls.

(c) *Impermanent surface coverings.* Impermanent surface coverings may be used to treat lead-contaminated soil if applied in accordance with the following requirements. Examples of acceptable impermanent coverings

include gravel, bark, sod, and artificial turf:

(1) If the area to be treated is heavily traveled, impermanent surface coverings that are not designed to withstand heavy traffic, such as grass, shall not be used.

(2) Coverings such as bark or gravel shall be applied in a thickness not less than six inches.

(3) The covering material shall not contain more than 200 ug/g (micrograms per gram) of lead.

(4) Adequate controls to prevent erosion shall be used in conjunction with impermanent coverings.

(d) *Land use controls.* (1) Land use controls may be used to reduce exposure to lead-contaminated soil by effectively preventing uncontrolled access to areas with lead-contaminated soil. Examples of land use controls include: fencing, warning signs, and landscaping.

(2) Land use controls shall be implemented only if residents have reasonable alternatives to using the area to be restricted.

(3) If land use controls are used for a soil area that is subject to erosion, measures shall be taken to contain the soil and control dispersion.

Subpart F—Abatement

§ 37.80 Requirements for abatement of lead-based paint or lead-based paint hazards.

(a) *General.* Abatement shall permanently eliminate, enclose, or encapsulate any lead-based paint or lead-based paint hazards in accordance with the requirements of this subpart. Abatement of intact, factory applied prime coatings on metal surfaces is not required. Finish coatings on such surfaces shall be abated if required by these regulations. Acceptable methods of abatement include, but are not limited to, component replacement, enclosure, removal, and encapsulation. For the purpose of this subpart permanent means a minimum effective life of 20 years.

(b) *Prohibited methods of paint removal.* The following paint removal methods shall not be used to remove lead-based paint:

(1) Open flame burning or torching;

(2) Machine sanding or grinding without a HEPA exhaust control;

(3) Uncontained hydroblasting or high pressure wash;

(4) Abrasive blasting or sandblasting without HEPA exhaust control;

(5) Heat guns operating above 1100 degrees Fahrenheit;

(6) Chemical paint strippers containing methylene chloride; and

(7) Dry scraping or dry sanding, except in conjunction with heat guns or around electrical outlets or to remove small amounts of deteriorated paint. A small amount of deteriorated paint is less than 10 square feet for exterior components with large surface areas (such as walls), less than 2 square feet for interior components with large surface areas (such as walls, ceilings, floors, or doors), and less than 10 percent of the total surface area of interior and exterior components with small surface areas (such as window sills, baseboards, and trim).

(c) *Encapsulation.* Encapsulation treatments used in accordance with the following requirements constitute an acceptable method of abatement:

(1) The encapsulating product or system shall be warranted by the manufacturer to perform for a minimum of 20 years as a durable barrier between lead-based paint and the environment in the type of application planned.

(2) Encapsulating products or systems shall be used in a manner consistent with the manufacturer's recommendations.

(3) Surfaces treated by encapsulation shall be monitored as required by subpart J of this part.

(4) Any failures of the encapsulant shall be repaired immediately in accordance with the manufacturer's recommendations.

(d) *Occupant protection and worksite preparation.* Occupants of dwelling units where abatement work is being performed shall be protected during the course of abatement activities in accordance with the requirements of subpart G of this part.

(e) *Cleanup.* Cleanup of the work area following the completion of abatement activities shall be performed in accordance with the requirements of subpart H of this part.

(f) *Clearance.* Upon completion of abatement work and cleanup, clearance testing shall be conducted in accordance with the requirements of subpart I of this part.

§ 37.82 Soil abatement.

Bare soil surrounding a residential property that is determined to have a lead concentration that exceeds 5,000 ug/g (micrograms per gram) shall be abated. Acceptable methods of soil abatement include, but are not limited to, removal and paving.

Subpart G—Occupant Protection and Worksite Preparation

§ 37.90 Purpose and applicability.

This subpart establishes procedures for protecting dwelling unit occupants and the environment from exposure to or contamination from lead-contaminated materials during lead-based paint hazard reduction activities. The requirements established by this subpart are applicable to all lead-based paint hazard reduction activities required by part 36 of this subtitle.

§ 37.92 Requirements for occupant protection.

(a) *General requirements.* Appropriate action shall be taken to protect occupants from lead-based paint hazards associated with lead-based paint hazard reduction activities.

(b) *Occupant access to worksite.* Occupants must not be permitted to enter the worksite during lead-based paint hazard reduction activities, unless such occupants are employed in the conduct of the interim controls or abatement at the worksite. Occupant re-entry into the worksite is permitted only after lead-based paint hazard reduction work has been completed and the dwelling unit has passed a clearance examination performed in accordance with the requirements of subpart I of this part. Occupants in dwelling units where only paint repair work has been performed may re-enter after that work and cleanup have been completed. No clearance examination is required for paint repair.

(c) *Occupant relocation requirements.* Occupants of a dwelling unit shall be temporarily relocated during lead-based paint hazard reduction activities unless the lead-based paint hazard control activities being performed in the dwelling unit qualify for one of the exceptions provided in paragraph (d) of this section. The following requirements apply to occupant relocation:

(1) Occupants shall be relocated before lead-based paint hazard reduction activities begin.

(2) Occupants shall be relocated to a suitable, decent, safe, and sanitary dwelling unit that is free of lead-based paint hazards.

(d) *Exceptions to occupant relocation requirement.* Occupant relocation is not required during lead-based paint hazard reduction activities if the work to be performed meets at least one of the following three exceptions:

(1) Only the exterior of the dwelling unit is treated; and the following two conditions are met:

(i) Windows, doors, and other openings that are in the vicinity of the worksite are sealed during hazard control work and cleanup to prevent lead-contaminated dust from entering the dwelling unit.

(ii) Entry and egress free of lead-contaminated dust and debris is provided.

(2) Treatment will not disturb lead-based paint or lead-contaminated dust; or

(3) Treatment of the interior will be completed within 5 calendar days, and all of the following conditions are met:

(i) The hazard reduction work area is sealed in a manner that prevents the release of leaded dust and debris into other areas.

(ii) At the end of the each day of hazard reduction activities, the area outside the containment area that is within at least 10 feet of the containment area shall be properly cleaned to remove any lead-contaminated dust or debris that may be present.

(iii) Occupants have safe access to sleeping areas, bathroom and kitchen facilities, and entryways after work hours.

(iv) Treatment does not create other safety hazards (i.e. exposed electrical wiring or holes in the floor).

(v) The work area is secured against entry during non-working hours until the dwelling unit passes a clearance exam in accordance with subpart I. When paint repair only is being performed the work area shall be secured against entry during non-working hours until such work is complete.

(e) *Protection of occupant belongings.* Property owners shall protect tenants' personal belongings from contamination by lead contaminated dust and debris while lead-based paint hazard reduction work and cleanup are being performed. Personal belongings shall be removed from the containment area. Large items that cannot be removed shall be covered with exposed seams taped shut.

§ 37.94 Worksite preparation.

(a) *General requirements.* The worksite for lead-based paint hazard reduction activities shall be prepared to prevent the release of lead-contaminated dust. Worksite preparation shall ensure that lead-contaminated dust, lead-based paint chips and other debris from hazard reduction activities are contained within the worksite until they can be safely removed. The appropriate worksite preparation shall be determined by a certified risk assessor, a certified abatement supervisor, or a trained lead-based paint planner/designer. Any of the seven levels of containment or combination of levels described in the HUD Guidelines is permissible.

(b) *General preparation.* (1) Any large debris or loose paint chips shall be removed from the worksite before the containment area is constructed.

(2) During the construction of the containment area and the duration of lead-based paint hazard reduction activities, workers shall follow practices that minimize the spread of lead contaminated dust and debris.

(3) Warning signs shall be required at entry to the room where lead hazard reduction activities are conducted when occupants are present. Warning signs shall be required at main and secondary entryways to the building when occupants have been relocated. If exterior lead hazard reduction activities are conducted warning signs shall be required on the building and at a 20 foot perimeter around the building (or less if the distance to the next building or the sidewalk is less than 20 feet).

Subpart H—Cleanup

§ 37.110 Purpose and applicability.

This subpart establishes procedures to assure that lead-contaminated debris and dust resulting from lead-based paint hazard reduction activities are properly removed to render residential properties acceptable for clearance and occupancy. The requirements are applicable to all lead-based paint hazard reduction activities required by part 36 of this subtitle except paint repair.

§ 37.112 Requirements for daily cleanup.

(a) *General.* Daily cleanup shall occur at the end of each workday after all lead-based paint hazard reduction activities have ceased in occupied units or in units where occupants return daily, and where exterior lead-based paint hazard reduction activities have occurred. Daily cleanup is not required in vacant units:

(1) The horizontal surfaces (excluding ceilings) in all containment areas in which lead-based paint hazard reduction activities are taking place shall be cleaned in accordance with the requirements of paragraph (b) of this section, as well as, any vertical surface within 5 feet of treated surfaces.

(2) If all lead-based paint hazard reduction activities are completed by the end of the first workday, daily cleanup is not required.

(b) *Required practices.* Daily cleanup shall include the following practices:

(1) Debris shall be wrapped in a protective covering with all seams taped or placed in closed durable containers resistant to puncture.

(2) Workers shall use cleaning practices that minimize the generation of airborne dust, such as misting dust and debris with water prior to cleaning. Carpets need not be misted prior to vacuuming. A system of cleaning that involves HEPA vacuuming, wet washing with a lead-specific detergent or equivalent and then HEPA vacuuming again has been used effectively to remove lead-contaminated dust.

(3) The containment area's protective coverings shall be examined and any defects repaired.

(4) Exterior areas affected by lead-based paint hazard reduction activities shall be examined daily for lead-contaminated debris which shall be wrapped, secured, and stored until removal.

§ 37.114 Requirements for final cleanup.

(a) *General.* The work area and any surrounding areas where lead-contaminated dust or debris may be present including window troughs shall be cleaned prior to performing a clearance examination.

(b) *Timing.* Final cleanup shall begin no sooner than one hour after active lead-based paint hazard control activities have ceased, but prior to repainting or sealing floors or other surfaces.

(c) *Required practices.* Required practices for final cleanup are as follows:

(1) Debris shall be wrapped in a protective covering with all seams taped or placed in closed durable containers resistant to puncture. The debris shall then be removed from the work area and stored in a secure location until removal.

(2) Dust and debris shall be removed in a manner which effectively avoids contamination of the residential property.

(3) Workers shall use cleaning practices that effectively remove lead-contaminated dust and that minimize the generation of airborne dust. For example, a system of cleaning that involves HEPA vacuuming, wet-washing with a lead-specific detergent or equivalent and then HEPA vacuuming again has been used effectively to remove lead-contaminated dust.

(4) Protective coverings used to contain or collect dust and debris within the work area shall be removed in a manner that prevents the dispersion of lead-contaminated dust and debris.

(5) Exterior areas affected by lead-based paint hazard reduction activities shall be visually examined for lead contaminated debris. Any such debris shall be wrapped, secured, and stored until removal.

(d) Sealing treated surfaces. Treated surfaces shall be finished by painting, varnishing, or an equivalent coating, after final cleanup is completed and before a clearance examination is performed.

Subpart I—Clearance

§ 37.120 Purpose and applicability.

The purpose of clearance examinations is to assure that all lead-based paint hazard reduction activities have been properly completed.

§ 37.122 General requirements.

(a) *Qualified examiner.* Clearance examinations shall be performed by a risk assessor or inspector certified in accordance with the requirements of 40 CFR 745.226. The risk assessor or inspector must not be affiliated with, paid, employed, or otherwise compensated by the entity performing the lead-based paint hazard reduction and the cleanup.

(b) *Timing.* The clearance examination shall begin no earlier than one hour after the completion of final cleanup as performed in accordance with subpart H of this part and any finish coating of surfaces.

§ 37.124 Unit selection.

(a) *Single-family properties.* In single-family properties each dwelling unit, and the worksite shall be examined.

(b) *Multifamily properties.* In multifamily properties with less than 21 units which have undergone similar lead-based paint hazard reduction activities, all units and common areas must be examined. In properties with 21 or more units, a random sample may be selected for examination in accordance with the requirements of subpart C of this part. If any dwelling unit in this sample fails either the visual examination required in § 37.126 or the dust sampling required in § 37.128, a clearance examination of all units shall be performed.

§ 37.126 Requirements for visual examination.

(a) *General.* A visual examination of the residential property shall be performed before dust and soil samples (if required) are collected.

(b) *Examining hazard control work.* The clearance examiner shall confirm that all lead-based paint hazard controls were properly completed by visual examination and reference to such documents as the risk assessment report, the specifications for hazard reduction, or a report by the abatement supervisor.

(c) *Visual Examination for dust and debris.* (1) During the visual examination, the clearance examiner shall also inspect the dwelling unit for visual evidence of dust and debris. The interior and exterior of the residential property shall be free of waste, debris, paint chips, and settled dust.

(2) If visible dust or debris are found during the visual examination, these areas of the dwelling unit shall be determined to fail the visual examination. These areas shall be recleaned in accordance with the requirements of § 37.130. Any uncorrected hazards shall be completed before final clearance is established. All units passing clearance must be free of lead-based paint hazards.

§ 37.128 Requirements for dust testing.

(a) *General requirements.* (1) Dust samples from dwelling units and common areas shall be collected according to the procedures in this section. Dust testing shall not begin until the dwelling unit passes the visual examination.

(2) If the test results exceed the following standards, the dwelling unit or common area fails the clearance examination and the actions required by § 37.128 shall be performed:

(i) Hard floors—100 μg/ft ^{2} (micrograms of lead per square foot).

(ii) Carpeted floors—100 μg/ft ^{2}.

(iii) Interior window sills—500 μg/ft ^{2}.

(b) *Dust sampling requirements.* (1) The minimum number and location of clearance dust samples shall be taken according to Table 1: Minimum Number and Location of Clearance Dust Samples for All Abatement and Interim Control Work; or

(2) Composite dust samples from multiple rooms in the same dwelling unit are acceptable if the rooms have undergone similar lead-based paint hazard control treatments and cleanup. The minimum number and location of composite clearance dust samples shall be taken according to Table 1 at the end of this section.

TABLE 1.—MINIMUM NUMBER AND LOCATION OF CLEARANCE DUST SAMPLES FOR ABATEMENT AND INTERIM CONTROL WORK

Clearance category	Category description	Number and location of single-surface wipe samples in each room [1]	Number and location of composite wipe samples
1	Interior treatments	Two dust samples from at least four rooms in dwelling unit (whether treated or untreated)—a total of 8 samples per unit.	Three composite samples for every batch of four rooms (whether treated or untreated):
	No containment within dwelling unit.	• One interior window sill	• One floor composite with one subsample from each room.
		• One floor and	• One interior window sill composite with one subsample from each room with windows, and
		• For common areas, one for every 2,000 ft^2 of a common area room floor (if present).	• For common areas, one floor subsample for every 2,000 ft^2 (if present); up to 8,000 ft^2 for each composite.
2	Interior treatments with containment.	Same as Category 1, but only in every treated room (at least four rooms) and.	Same as Category 1 but only in every treated room and,
		One floor sample outside the containment area but within 10 feet of the airlock to determine the effectiveness of the containment system. This extra single-surface sample is required in 20 percent of the treated dwelling units in a multi-family property and all single-family properties.	One single-surface floor sample outside the containment area but within 10 feet of the airlock to determine the effectiveness of the containment a system. (This extra single-surface sample is required in 20 percent of the treated dwelling units in a multifamily property and all single-family properties.)
		• For treated Common Areas, one floor sample for every 2,000 ft^2 and one floor sample outside containment.	• For Common Areas, one floor subsample for every 2,000 ft^2 (up to 8,000 ft^2 for each composite) and one floor sample outside containment.
3	Exterior treatments	Two dust samples as follows:	Two dust samples as follows:

TABLE 1.—MINIMUM NUMBER AND LOCATION OF CLEARANCE DUST SAMPLES FOR ABATEMENT AND INTERIM CONTROL WORK—Continued

Clearance category	Category description	Number and location of single-surface wipe samples in each room [1]	Number and location of composite wipe samples
		• At least one dust sample on a horizontal surface in part of the outdoor living areas (e.g., a porch floor, balcony, or exterior entryway), and. • One interior window sill sample on each floor where exterior work was performed. An additional sill sample should be collected from a few lower floors to determine if sills below the area were contaminated by the work above.	• One composite on horizontal surfaces of the outdoor living areas (e.g., a porch floor, balcony or exterior entryway), if any and • One interior window sill composite for every 4 floors where exterior work was performed, including lower floors where exterior work was not done, if present.
4	Soil Treatment	One sample from the entryway	One sample from the entryway.

[1] A room includes a hallway or a stairway. If no window is present, collect just one floor sample. When a closet is treated, the room to which it is attached should be tested. A closet is not considered to be a separate room.

§ 37.130 Required actions for dwelling units and common areas that fail dust tests.

(a) If a single-surface dust sample for a dwelling unit or common area fails, all components that the sample represents shall be re-cleaned in accordance with § 37.114 until they pass a dust clearance test. If single surface samples in only one room or on one type of component fail, only that room or component shall be recleaned and be retested repeatedly until it passes a dust clearance test.

(b) If composite surface dust samples for a dwelling unit or common area fail, all surfaces represented by that dust sample shall be re-cleaned in accordance with § 37.114 or tested individually to determine which surfaces fail and must therefore be recleaned. The areas that fail shall be recleaned and retested repeatedly until they pass the clearance test.

§ 37.132 Requirements for soil testing.

(a) *General.* Clearance soil samples shall be taken if exterior lead-based paint hazard reduction activities have been performed. If the exterior lead-based paint hazard reduction activities involve covering bare soil only, clearance soil samples are not required. Only a visual examination is required in accordance with § 37.126(c).

(b) *Requirements.* The results of soil samples shall be collected and analyzed in accordance with the following requirements:

(1) Soil testing shall not begin until the residential property passes the visual examination.

(2) Soil sampling may be performed on a random sample of soil locations around a multifamily complex of 10 or more buildings.

(3) All soil samples shall be composite samples of bare soil only.

(4) The number and location of clearance soil samples shall be taken in accordance with the following specifications:

(i) One composite sample shall be collected around the perimeter of the building. If only selected faces of the building were treated, the subsamples should come from those faces.

(ii) A second composite sample shall be collected from nearby play areas, if any.

(6) If the test results for soil samples exceed the following standards, the worksite fails the clearance examination and the actions required by § 37.134 shall be performed:

(i) 400 ug/g (micrograms per gram) in children's play areas; or

(ii) 2,000 ug/g (micrograms per gram) in other areas.

§ 37.134 Required actions for properties that fail soil tests.

If the amount of lead in bare soil is above 400 ppm in small, compact play areas, above 2000 ppm otherwise, and at least 2 square feet of soil are bare, soil shall be re-treated using either interim controls or abatement in accordance with subparts E and F of this part.

Subpart J—Monitoring

§ 37.140 Exemptions.

Monitoring is not required when either of the following has occurred:

(a) The results of both a risk assessment and a paint inspection performed in accordance with subparts B and C of this part indicate that no lead-based paint is present in the dwelling units, common areas, or on exterior surfaces, and soil and dust lead levels are below applicable standards.

(b) All building components with lead-based paint have been removed and/or all lead-based paint has been removed, and a risk assessor determines that soil and dust lead levels are below applicable standards.

§ 37.142 General requirements.

Monitoring includes two types of procedures: Visual surveying and reevaluation.

§ 37.144 Visual survey.

(a) *Objectives.* The visual survey shall identify:

(1) Any deteriorated paint surfaces with known or suspected lead-based paint.

(2) Any failures of prior lead-based paint hazard reduction work. Encapsulation and enclosure treatments that are no longer securely attached and sealed and deteriorated paint repairs are examples of failed treatments.

(3) Structural or plumbing problems, including water leaks, that threaten the integrity of any remaining known or suspected lead-based paint or any encapsulation or enclosure treatments.

(b) *Schedule.* Property owners or other responsible entities shall conduct annual visual surveying of dwelling units, common areas, and the worksite, beginning no later than 12 months after the completion of the initial lead-based paint hazard evaluation and/or hazard reduction activities.

(1) If interim controls were used on bare soil, visual surveying must be performed three months after the controls are implemented to verify the efficacy of the controls and then annually thereafter.

(2) If encapsulation was used as a hazard control the visual survey shall be conducted at one month, six months, and annually thereafter.

(3) If the owner receives complaints from residents about potential lead-based paint hazards, if the dwelling unit changes occupants or becomes vacant, or if significant damage occurs that could affect the integrity of control treatments, visual surveying of affected surfaces shall be conducted promptly.

(c) *Correction of identified hazards.* If any of the conditions listed in § 37.144(b) are identified during visual surveying, these conditions shall be promptly and safely corrected.

§ 37.146 Reevaluation.

(a) *General.* Reevaluation is a modified risk assessment/clearance examination consists of a visual assessment of painted surfaces and prior lead-based paint hazard reduction work, and limited dust and soil sampling.

(b) *Objectives.* Reevaluations shall be conducted as required to identify:

(1) Deteriorated paint surfaces with known or suspected lead-based paint;

(2) Deteriorated or failed interim controls of lead-based paint hazards or encapsulation or enclosure treatments;

(3) Lead-contaminated dust;

(4) New bare soil with lead levels above applicable standards.

(c) *Certified risk assessor.* Reevaluations shall be performed by risk assessors certified in accordance with 40 CFR 745.226. Certified inspector technicians may conduct environmental sampling under the supervision of a certified risk assessor.

(d) *Scheduling.* (1) Reevaluations shall be conducted in accordance with the schedule in Table 1, Standard Reevaluation Schedule, in this section. Reevaluation intervals are expressed in months from the date the risk assessment was completed. Initial and follow-up reevaluations shall occur no later than the deadlines shown in Table 1, Standard Reevaluation Schedule.

(2) When more than one reevaluation schedule applies, the more stringent schedule shall be observed.

(3) If a dwelling unit, common area, or worksite fails a reevaluation, a new reevaluation schedule shall be initiated. The initial evaluation results shall dictate which reevaluation schedule shall be applied. If a dwelling unit fails two consecutive reevaluations, the reevaluation interval shall be reduced by half and the number of reevaluations shall be doubled.

TABLE 1.—STANDARD REEVALUATION SCHEDULE

Schedule	Evaluation results	Action taken	Reevaluation frequency and duration	Visual survey (by owner or owners representative)
1	Combination risk assessment/paint inspection finds no leaded dust or soil and no lead-based paint.	None	None	None.
2	No Lead-based paint hazards found during risk assessment conducted before hazard control or at clearance (hazards include dust and soil).	None	3 Years	Annually and whenever information indicates a possible problem.
3	The average of leaded dust levels on all floors or interior window sills sampled exceeds the applicable standard, but by less than a factor of 10.	A. Interim controls and/or hazard abatement (or mixture of the two), including, but not necessarily limited to dust removal. This schedule does not include window replacement.	1 Year, 2 Years.	Same as Schedule 2, except for encapsulants. The first visual survey of encapsulants shall be done one month after clearance; the second shall be done 6 months later and annually thereafter.
		B. Treatments specified in section A plus replacement of all windows with lead hazards.	1 Year	Same as Schedule 3A.
		C. Abatement of all lead-based paint using encapsulation or enclosure.	None	Same as Schedule 3A above.
		D. Removal of all lead-based paint	None	None.
4	The average of leaded dust levels on all floors or interior window sills sampled exceeds the applicable standard by a factor of 10 or more.	A. Interim controls and, or hazard abatement (or mixture of the two), including, but not necessarily limited to dust removal. This schedule does not include window replacement.	6 Months, 1 Year, 2 Years.	Same as Schedule 3A.
		B. Treatments specified in section A plus replacement of all windows with lead hazards.	6 Months, 2 Years.	Same as Schedule 3A.
		C. Abatement of all lead-based paint using encapsulation and enclosure.	None	Same as Schedule 3A.
		D. Removal of all lead-based paint	None	None.
5	No leaded dust or leaded soil hazards identified, but lead-based paint or lead-based paint hazards are found.	A. Interim controls or mixture of interim controls and abatement (not including window replacement).	2 Years	Same as Schedule 3A.
		B. Mixture of interim controls and abatement, including window replacement.	3 Years	Same as Schedule 3A.
		C. Abatement of all lead-based paint hazards, but not all lead-based paint.	4 Years	Same as Schedule 3A.
		D. Abatement of all lead-based paint using encapsulation or enclosure.	None	Same as Schedule 3A.
		E. Removal of all lead-based paint	None	None.
6	Bare leaded soil exceeds standard, but less than 5,000 ug/g.	Interim controls	None	3 months to check new ground cover, then annually to identify new bare spots.

TABLE 1.—STANDARD REEVALUATION SCHEDULE—Continued

Schedule	Evaluation results	Action taken	Reevaluation frequency and duration	Visual survey (by owner or owners representative)
7	Bare leaded soil greater than or equal to 5,000 ug/g.	Abatement (paving or removal or cultivation).	None	None for removal, annually to identify new bare spots or deterioration of paving.

(e) *Scope and dwelling unit selection.* Reevaluations of single-family and multifamily properties shall be performed as follows:

(1) In single-family properties and multifamily properties of five units or less, all dwelling units and common areas, as well as the worksite, shall be reevaluated.

(2) In multifamily properties of more than five similar dwelling units, a sample of dwelling units may be selected for reevaluation. If sampling is used, units to be reevaluated shall be selected in accordance with the targeted sampling requirements of § 37.10, or the random sampling requirements of § 37.34. If possible, some of the units selected shall be units not previously evaluated. Common areas associated with the units selected and the worksite shall also be reevaluated.

(f) *Protocol.* Reevaluations shall be performed in accordance with the following requirements:

(1) A certified risk assessor shall perform a visual assessment to identify any deteriorated lead-based paint, any failures of lead-based paint hazard reduction activities, or any other lead-based paint hazards, as follows:

(i) The risk assessor shall review any past risk assessment, paint inspection, clearance, reevaluation reports, and any other information describing the hazard reduction activities in use.

(ii) A careful visual assessment of all lead-based paint hazard reduction activities and any known or suspected lead-based paint shall then be conducted to determine whether the paint is still intact and the hazard reduction activities are well maintained.

(iii) The visual assessment of the worksite shall identify any new areas of bare soil, as well as checking for any failures of lead hazard reduction activities performed for previously contaminated soil.

(2) For deteriorated paint surfaces identified during the visual assessment for which reliable information about lead content is unavailable, the risk assessor shall measure the lead content by XRF analyzer or paint chip laboratory analysis performed in accordance with the requirements of § 37.14, except as follows:

(i) If the owner or risk assessor assumes that all such deteriorated painted surfaces contain lead-based paint, analysis of the paint's lead content is not required.

(ii) Testing is not required if the surface area of deteriorated paint on a single component does not exceed 10 square feet on exterior components with large surface areas, 2 square feet on interior components with large surface areas, or 10 percent of the total surface area of interior or exterior components with small surface areas.

(3) If any hazard reduction activity is failing (e.g. an encapsulant is peeling away from the wall or a paint stabilized surface is no longer intact) or deteriorated lead-based paint is present, the risk assessor shall determine acceptable options for controlling the hazard.

(4) Upon completion of the visual assessment, if all lead-based paint hazard reduction activities appear to be in place and no deteriorated lead-based paint is present, the risk assessor shall begin dust sampling. If any lead-based paint hazard reduction activities are not in place or deteriorated lead-based paint is present, the hazards shall be controlled before any dust sampling occurs.

(5) Dust sampling of dwelling units and common areas shall be performed as follows:

(i) For reevaluation, composite dust sampling is permitted as a cost effective method. At least two composite samples shall be taken, one from floors and the other from interior window sills. No more than four subsamples shall be collected for each composite sample. If the dwelling unit contains both carpeted and uncarpeted living areas, separate floor samples are required from the carpeted and uncarpeted areas.

(ii) Dust samples or subsamples shall be collected from locations selected in accordance with § 37.16.

(iii) If a dwelling unit or common area is found to contain lead levels that exceed the following standards, that dwelling unit or common area shall be cleaned in accordance with the requirements of § 37.114.

(A) Hard floors—100 $\mu g/ft^2$.

(B) Carpeted floors—100 $\mu g/ft_2$.

(C) Interior window sills—500 $\mu g/ft^2$.

(6) Soil testing shall be performed as part of a reevaluation if new areas of bare soil are identified during the visual assessment. Soil samples shall be collected from locations selected in accordance with § 37.18. If the amount of lead in soil is above 400 ppm in play areas or above 2000 ppm in other areas, and at least 2 square feet of soil are bare, soil shall be treated using interim controls or abatement in accordance with subparts E and F of this part.

(7) If the visual assessment reveals that the controls used for lead-contaminated soil (e.g., impermanent coverings or land use controls) have failed, more permanent soil treatments that will effectively control these hazards shall be performed. For example, if the gravel used to cover an area of contaminated soil is worn away due to use or erosion, a more durable surface covering such as artificial turf or asphalt must be used.

(g) *Reporting.* The risk assessor shall produce a written report documenting the presence or absence of lead-based paint hazards. The report shall:

(1) Identify any lead-based paint hazards previously detected and controlled and discuss the efficacy of these interventions;

(2) Describe any new hazards and present the owner with acceptable control options and their accompanying reevaluation schedules;

(3) Identify when the next reevaluation will occur, if necessary.

(h) *Completion of required reevaluations.* When all required reevaluations are completed, the dwelling unit is subject only to annual visual surveys. However, if ownership of the residential property is transferred, a new reevaluation schedule must be initiated.

Dated: December 15, 1995.

Henry G. Cisneros,

Secretary.

[FR Doc. 96–14101 Filed 6–6–96; 8:45 am]

BILLING CODE 4210–01–P

federal register

Friday
June 7, 1996

Part III

Department of Transportation

Federal Highway Administration

23 CFR Part 655

National Standards for Traffic Control Devices; Revision of the Manual on Uniform Traffic Control Devices; Pedestrian, Bicycle, and School Warning Signs; Proposed Rule

DEPARTMENT OF TRANSPORTATION

Federal Highway Administration

23 CFR Part 655

[FHWA Docket No. 96–9]

RIN 2125–AD89

National Standards for Traffic Control Devices; Revision of the Manual on Uniform Traffic Control Devices; Pedestrian, Bicycle, and School Warning Signs

AGENCY: Federal Highway Administration (FHWA), DOT.

ACTION: Notice of proposed amendment to the Manual on Uniform Traffic Control Devices (MUTCD); request for comments.

SUMMARY: The MUTCD is incorporated by reference in 23 CFR part 655, subpart F, and recognized as the national standard for traffic control on all public roads. After the current 1988 Edition of the MUTCD was published, a decision was made by the FHWA on January 6, 1988, at 53 FR 236, to postpone rulemaking on all requests for revisions to the MUTCD except those changes which would significantly impact safety. The FHWA announced its intent to rewrite and reformat the MUTCD on January 10, 1992, at 57 FR 1134. This effort is still underway and as work progresses, many changes and modifications are being proposed. The FHWA is inviting comments on a proposed change to the MUTCD which would assign the color fluorescent yellow green as an optional color for pedestrian, bicycle, and school warning signs.

DATES: Submit comments on or before October 7, 1996.

ADDRESSES: Submit written, signed comments to FHWA Docket No. 96–9, Federal Highway Administration, Room 4232, HCC–10, 400 Seventh Street, SW., Washington, DC 20590. All comments received will be available for examination at the above address between 8:30 a.m. and 3:30 p.m., e.t., Monday through Friday except Federal holidays. Those desiring notification of receipt of comments must include a self-addressed, stamped postcard.

FOR FURTHER INFORMATION CONTACT: For information regarding this notice of proposed amendment contact Mr. Ernest Huckaby, Office of Highway Safety, Room 3416, (202) 366–9064, or Mr. Raymond Cuprill, Office of Chief Counsel, Room 4217, (202) 366–0834, Department of Transportation, Federal Highway Administration, 400 Seventh Street, SW., Washington, DC 20590. Office hours are from 7:45 a.m. to 4:15 p.m., e.t., Monday through Friday except Federal holidays.

SUPPLEMENTARY INFORMATION: The MUTCD is available for inspection and copying as prescribed in 49 CFR Part 7, appendix D. It may be purchased for $44.00 from the Superintendent of Documents, U. S. Government Printing Office, Washington, DC 20402, Stock No. 050–001–00308–2.

The FHWA both receives and initiates requests for amendments to the MUTCD. Each request is assigned an identification number which indicates, by Roman numeral, the organizational part of the MUTCD affected and, by Arabic numeral, the order in which the request was received.

This notice is being initiated by the FHWA to provide an opportunity for comment on the desirability of the proposed amendment to the MUTCD. Based on comments submitted in response to this notice and upon its own experience, the FHWA will issue a final rule concerning this request.

Background

Request I–16(C)—Fluorescent Strong Yellow Green Signs

The FHWA is exploring new technology to improve transportation safety and the effectiveness of traffic control devices. The FHWA is working to reduce the number of pedestrian and bicycle accidents through the use of the new color called fluorescent yellow green, formerly called strong yellow green in the MUTCD. The word ''fluorescent'' more accurately describes the nature of the proposed color. Fluorescent colors not only reflect light, as do nonfluorescent colors, but they also emit additional light. For this reason, fluorescent colors appear brighter than similar nonfluorescent colors. A fluorescent yellow green sign will stand out from its background, commanding the attention of drivers approaching school zones and pedestrian and bicycle crossings. This color is one of four unassigned colors contained in the MUTCD for use on highways.

Studies

The FHWA has initiated and completed two studies with the use of fluorescent yellow green signs—a pilot sudy in conjunction with the National Park Service and a nationwide study. Copies of the final reports from the pilot study and the 24 participants in the nationwide study are available for review in FHWA Docket No. 96–9 in the FHWA Docket Room at the address listed above. In early 1992, an FHWA pilot study was completed by the National Park Service which examined the effects of fluorescent yellow green crossing signs on motorist behavior at five pedestrian and bicycle crossings in the Washington, D.C. area. The scope of this study included before and after observations at five sites on the George Washington and Rock Creek Parkways, where the new crossing signs were installed, and at one comparison site where no changes were made. The pilot study was limited in scope to recreational crossings. While the results were positive, further studies were recommended to examine the effectiveness of the sign in other States and under other crossing conditions, such as, nonrecreational use and school crossings.

In early 1993, the FHWA conducted a nationwide study to evaluate the fluorescent yellow green on school, as well as pedestrian and bicycle, crossing signs. A total of 57 jurisdictions were given permission to participate in the study. Guidance was provided for evaluation design and site selection criteria. Field observations consisted of behavioral data used to measure motorist, pedestrian, and bicyclist actions, and volume counts used to provide a measure of exposure. In addition to collecting behavior data and volume counts, speed data was also collected to determine if the new crossing signs had an effect on the speed profile. Public opinion surveys were also distributed randomly to persons who traveled through the study area and to staff members and parents in schools which were a part of the study.

Of the 57 original jurisdictions, 24 of the participants responded with final report recommendations. Two major issues were mentioned concerning the adoption of fluorescent yellow green. The first issue involved the cost of the fluorescent yellow green sheeting material. This material costs more than one and a half times as much as the High Intensity sign material. A gradual phase-in is recommended as part of routine maintenance in view of the cost and number of replacements necessary. Another major issue is that the novelty effect may wear off and over time the fluorescent yellow green signs may be regarded as the standard yellow signs are now.

Overall evaluation results showed that the fluorescent yellow green signs had only marginal effects in improving the behavior of motorists. At the few sites where the number of motorists slowing or stopping for pedestrians or bicyclists did increase, the amount of increase was not significant. The fluorescent yellow green signs had little

or no noticeable effect on the speed of motor vehicles. The greatest impact from the study was found in the public opinion surveys. Survey comments indicated a positive response to the new signs. It was evident from the survey results that the signs were very effective in getting the attention of motorists. Many people felt the fluorescent yellow green signs would increase pedestrian safety.

Proposed Change to MUTCD

Although the evaluation data showed only marginal effects in improving the behavior of motorists, the FHWA's review and examination of the studies and public surveys described above appear to indicate that this new color warning sign would improve the conspicuity of the sign message and is very effective in getting the attention of motorists during daylight conditions. The FHWA proposes to adopt the fluorescent yellow green as an optional color for Pedestrian Crossing Sign (W11–2), Bicycle Crossing Sign (W11–1), School Advance Sign (S1–1), School Crossing Sign (S2–1), and School Bus Stop Ahead Sign (S3–1). If a State or local highway agency elects to use the fluorescent yellow green signs at these specified locations, the FHWA recommends that a systematic approach be used to install these signs. For example, if a specific school area is identified as a candidate for fluorescent yellow green, then all school signs installed in that immediate area should be fluorescent yellow green. The mixing of standard yellow and fluorescent yellow green within a selected site area should be avoided.

The Commission Internationale de l'Eclairage (CIE) (English: International Commission on Illumination) chromaticity coordinates (x,y), defining the corners of the Fluorescent Yellow Green daytime color region, are as follows:

x	y
0.387	0.610
0.460	0.540
0.421	0.486
0.368	0.539

These four pairs of chromaticity coordinates determine the acceptable color in terms of the CIE 1931 Standard Colorimetric System (2 degree standard observer) measured with CIE Standard Illuminant D65 in accordance with ASTM E991. In addition, the color shall be fluorescent, as determined by ASTM E1247.

The chromaticity limits given above supersede the color Brilliant Yellow Green, issued by the National Joint Committee on Uniform Traffic Control Devices in May 1969, which is no longer applicable.

Rulemaking Analyses and Notices

Executive Order 12866 (Regulatory Planning and Review) and DOT Regulatory Policies and Procedures

The FHWA has determined that this action is not a significant regulatory action within the meaning of Executive Order 12866 or significant within the meaning of Department of Transportation regulatory policies and procedures. It is anticipated that the economic impact of this rulemaking would be minimal. The change proposed in this notice provides additional guidance, clarification, and optional applications for traffic control devices. The FHWA expects that application uniformity will improve at little additional expense to public agencies or the motoring public. Therefore, a full regulatory evaluation is not required.

Regulatory Flexibility Act

In compliance with the Regulatory Flexibility Act (Pub. L. 96–354, 5 U.S.C. 601–612), the FHWA has evaluated the effects of this proposed action on small entities, including small governments. This notice of proposed rulemaking adds some alternative traffic control devices and only a very limited number of new or changed requirements. Based on this evaluation, the FHWA hereby certifies that this action would not have a significant economic impact on a substantial number of small entities.

Executive Order 12612 (Federalism Assessment)

This action has been analyzed in accordance with the principles and criteria contained in Executive Order 12612, and it has been determined that this action would not have sufficient federalism implications to warrant the preparation of a federalism assessment. The MUTCD is incorporated by reference in 23 CFR part 655, subpart F, which requires that changes to the national standards issued by the FHWA shall be adopted by the States or other Federal agencies within two years of issuance. The proposed amendment is in keeping with the Secretary of Transportation's authority under 23 U.S.C. 109(d), 315, and 402(a) to promulgate uniform guidelines to promote the safe and efficient use of the highway. To the extent that this amendment would override any existing State requirements regarding traffic control devices, it does so in the interests of national uniformity.

Executive Order 12372 (Intergovernmental Review)

Catalog of Federal Domestic Assistance Program Number 20.205, Highway Planning and Construction. The regulations implementing Executive Order 12372 regarding intergovernmental consultation on Federal programs and activities apply to this program.

Paperwork Reduction Act

This action does not contain a collection of information requirement for purposes of the Paperwork Reduction Act of 1995, 44 U.S.C. 3501 *et seq.*

National Environmental Policy Act

The agency has analyzed this action for the purpose of the National Environmental Policy Act of 1969 (42 U.S.C. 4321 *et seq.*) and has determined that this action would not have any effect on the quality of the environment.

Regulation Identification Number

A regulation identification number (RIN) is assigned to each regulatory action listed in the Unified Agenda of Federal Regulations. The Regulatory Information Service Center publishes the Unified Agenda in April and October of each year. The RIN contained in the heading of this document can be used to cross reference this action with the Unified Agenda.

List of Subjects in 23 CFR Part 655

Design standards, Grant programs—transportation, Highways and roads, Incorporation by reference, Signs, Traffic regulations.

(23 U.S.C. 109(d), 114(a), 315, and 402(a); 23 CFR 1.32, 655.601, 655.602, and 655.603; 49 CFR 1.48)

Issued on: May 28, 1996.

Rodney E. Slater,

Federal Highway Administrator.

[FR Doc. 96–14261 Filed 6–06–96; 8:45 am]

BILLING CODE 4910–22–P

federal register

Friday
June 7, 1996

Part IV

Department of Housing and Urban Development

24 CFR Part 3500

Real Estate Settlement Procedures Act; Statements of Policy, Withdrawal of Employer-Employee and Computer Loan Origination Systems Exemptions; Final Rules

DEPARTMENT OF HOUSING AND URBAN DEVELOPMENT

24 CFR Part 3500

[Docket No. FR–3638–F–06]

RIN 2502–AG26

Office of the Assistant Secretary for Housing—Federal Housing Commissioner; Amendments to Regulation X, the Real Estate Settlement Procedures Act: Withdrawal of Employer-Employee and Computer Loan Origination Systems (CLOs) Exemptions

AGENCY: Office of the Assistant Secretary for Housing-Federal Housing Commissioner, HUD.

ACTION: Final rule.

SUMMARY: In this final rule, the Department of Housing and Urban Development is revising Regulation X, which implements the Real Estate Settlement Procedures Act of 1974 (RESPA). This rule completes a process that started with a public hearing and comment period on August 6, 1993, followed by a proposed rule published on July 21, 1994.

In the interest of protecting consumers from practices prohibited by RESPA, while making available to consumers the potential benefits of innovative business arrangements, this rule withdraws an exemption for employer-employee payments, introduces two more-limited exemptions for payments that would otherwise be prohibited by the statute—employer payments to managerial employees and employees who do not perform settlement services in any transaction. In addition, to relieve any uncertainty, the rule adds an additional exemption to clarify that payments made to an employer's own *bona fide* employee for generating business for that employer are permissible. The rule also revises certain controlled business disclosure requirements. HUD has chosen to use its exemption authority under Section 8(c)(5) of RESPA, having consulted with other Federal agencies as required by that provision, as well as the authority under Section 19(a) of RESPA, to permit these payments.

The rule also withdraws an exemption for payments made by borrowers for computer loan origination (CLO) services, because the exemption was found to be of little benefit to consumers or the loan origination industry. However, in order to assure that consumers in the mortgage lending marketplace continue to benefit from technological innovation, simultaneously with the publication of this rule, the Department is issuing a Statement of Policy analyzing payments for CLOs under the RESPA regulations. In addition, the Department is simultaneously publishing two other Statements of Policy on issues raised by comments on the proposed rule, although not directly related to the proposed rule, and which involve interpretation rather than new rulemaking.

EFFECTIVE DATE: This rule is effective on October 7, 1996.

FOR FURTHER INFORMATION CONTACT: David Williamson, Director, Office of Consumer and Regulatory Affairs, Room 5241, telephone (202) 708–4560; or, for legal questions, Kenneth Markison, Assistant General Counsel for GSE/RESPA, or Grant E. Mitchell, Senior Attorney for RESPA, Room 9262, telephone (202) 708–1550. (The telephone numbers are not toll-free.) For hearing- and speech-impaired persons, this number may be accessed via TTY (text telephone) by calling the Federal Information Relay Service at 1–800–877–8339. The address for the above-listed persons is: Department of Housing and Urban Development, 451 Seventh Street, SW, Washington, DC 20410.

SUPPLEMENTARY INFORMATION:

Paperwork Reduction Act Statement

The information collection requirements regarding controlled business disclosures (Appendix D of this rule) have been approved by the Office of Management and Budget, under the Paperwork Reduction Act of 1995 (44 U.S.C. 3501–3520), and assigned OMB control number 2502–0265. An agency may not conduct or sponsor, and a person is not required to respond to, a collection of information unless the collection displays a valid control number.

The Department has eliminated the CLO disclosure statement which previously was contained in Appendix E to the RESPA rule. Based on prior cost estimates, the Department estimates the annual savings to business from eliminating this paperwork requirement to be $3,247,100.

I. Events Leading to Today's Final Rule

A. History of CBAs and CLOs

1. Controlled Business Arrangements

In 1983, Congress enacted the ''controlled business arrangement'' amendment to RESPA. This amendment, codified under section 461 of the Housing and Urban-Rural Recovery Act of 1983 (HURRA) (Pub. L. 98–181, 97 Stat. 1230) established that controlled business arrangements do not violate RESPA, provided that:

(a.) The relationship between the person performing settlement services and the person making the referral is disclosed, along with the estimated charges of the provider;

(b.) Consumers are not required to use an affiliated settlement service provider, except under certain specified exemptions under Section 8 of RESPA; and

(c.) Nothing of value is received by the referring party, beyond a return on ownership interest or franchise relationship or payments otherwise permissible under Section 8(c) of RESPA.

Following the enactment of these amendments, HUD issued several informal legal opinions concerning the extent to which employers could pay referral fees to employees. The opinions stated that *bona fide* full-time employees could be compensated for generating business for their own employers, as this would be within the scope of their employment. These opinions also made clear that uncompensated referrals to affiliated companies were not prohibited. HUD did *not*, however, broadly approve compensation to employees for referrals to affiliated companies.

2. Computer Loan Origination Systems (CLOs)

During the 1980's, a number of private companies and trade organizations began to develop systems where some or most of the usual mortgage origination services could be performed by computers. These computer services frequently linked real estate brokerage offices to lenders or other settlement service providers. Concerns were raised to HUD regarding the interplay of these systems with Section 8 of RESPA, particularly whether the existence of such systems could result in illegal steering or compensation for referrals of business, or whether the use of the systems would allow the operators to impose charges for activities which represented little or no actual services. Several developers of such systems and potential competitors asked HUD for its views on payments made in connection with these systems under RESPA.

In the mid-1980's, HUD issued several informal interpretations generally concluding that payments for CLO systems did not violate Section 8 of RESPA. The opinions stated that, so long as payments by the lenders (or real estate brokerage offices) went to cover ''operational fixed costs'' of the CLO services, no referral fees existed. Moreover, the opinions stated that

borrower payments to CLOs were analogous to arrangements whereby borrowers voluntarily pay mortgage brokers for locating lenders. Accordingly, the Department concluded that such payments were not pursuant to a prohibited ''agreement or understanding'' under Section 8(a) of RESPA and thus, were not proscribed by Section 8(a) of RESPA.

On two subsequent occasions, the Department revisited RESPA's role in payments for CLO services through informal opinions. Both cases involved payments to CLO operators from either lenders or real estate brokers. In these two opinions, the Department concluded that such fees did not violate Section 8(b) of RESPA so long as the fees were reasonably related to services actually rendered. Controversy continued to surround the use of CLO systems, with many mortgage bankers opposing, and realtors supporting, HUD's position. All opinions were withdrawn pursuant to a final rule published on November 2, 1992 (57 FR 49600) under RESPA (hereinafter ''final rule'' or ''1992 final rule'').

In May 16, 1988, HUD opened up this matter for review and discussion without specifically mentioning CLOS, by proposing a rule (53 FR 17428, 17438) that would have added an exception under § 3500.14, to allow the following:

> Voluntary payment by a borrower to a person who has acted as a mortgage broker or has otherwise assisted in bringing the lender and borrower together, provided that such voluntary payment is disclosed on both the good faith estimate of settlement costs and the HUD–1 settlement statement and is not a condition of the loan or other settlement service.

The 1992 final rule did not adopt the so-called ''mortgage broker exception'', but did adopt a CLO exemption.

B. The 1992 Rule

On November 2, 1992, HUD published the 1992 final rule, which became effective on December 2, 1992. The 1992 final rule contained provisions implementing congressional amendments to RESPA regarding controlled businesses and created an exemption for payments by borrowers to computer loan origination systems. The final rule also updated the original RESPA regulations, which had not been amended since 1976.

1. Employer-Employee Exemption

The 1992 final rule went beyond HUD's previous positions, as articulated through informal legal opinions that were withdrawn by the 1992 final rule, and created an exemption for payments by an employer to its own employees for any referrals of settlement service business. Employees were thus allowed to receive compensation from their employers for generating business for their own employer or for any other business entity (including affiliates). The final rule contained a stricture, in § 3500.14(b), that the business entity receiving the referrals of settlement business could not directly or indirectly compensate anyone for such business. The rule did not limit this exemption to controlled business arrangements. The exemption, however, had little utility for entities outside an affiliate business setting, since it was unlikely that an employer would pay its own employees for making referrals to unaffiliated individuals or companies. As noted, while the rule permitted an employer to compensate its own employees for referrals, it also indicated that if the business entity receiving the referral reimbursed the employer of the employees making the referrals, Section 8 of RESPA would be violated.[1]

Following the 1992 final rule's issuance, two lawsuits were filed objecting to provisions of the revised regulations as inconsistent with the statute and claiming failure by the Department to comply with the Administrative Procedure Act in the rule's promulgation.[2] In addition, upon assuming office, HUD officials in the new Administration were inundated with comments about the final rule.

The Department received allegations that the final rule created uncertainty about whether referral fees were in fact prohibited by RESPA. Some entities critical of the 1992 final rule characterized the provision permitting employers' payments to their own employees for referrals as broadly sanctioning referral payments. The trade and business press frequently restated this position without examination. Also, some commenters claimed that the creation of an employer-employee exemption from the prohibition on referral fees prompted some persons to set up sham employer-employee relationships to shield prohibited referral fees, and it prompted others to ''extort'' referral fees from other settlement service providers on the premise that HUD now allowed such compensation. While the final rule was not intended to permit sham arrangements, neither did it clarify the extent of the employer-employee exemption. Commenters argued that the final rule failed to establish a bright line, comprehensible to industry participants, between permissible and impermissible activities.

2. CLO Exemption

The 1992 final rule also introduced a CLO exemption, which provided that borrower payments to CLO systems were exempt from Section 8 so long as a specified disclosure was made. The 1992 final rule did not adopt the mortgage broker exception proposed in the May 1988 proposed rule. The Department reasoned that well-informed choices by consumers did not require special protection under RESPA. Moreover, this exemption was intended to prevent RESPA's restrictions against unearned fees from unduly inhibiting the development of technology which could permit consumers to shop, apply for and/or obtain mortgage loans electronically. CLO systems were not specifically defined in the 1992 rule.

C. A Public Dialogue

Given the controversy over the 1992 final rule, the Secretary determined that a review of the previous policy—primarily concerning the exemptions for employer payments to employees and borrower payments to CLOs—was needed. The review would particularly focus on the final rule's impact on consumers. The Secretary articulated three principles to guide that review:

1. HUD's responsibility is to protect the consumer—not to mediate among industry interests.
2. HUD should regulate multimillion dollar industries responsibly—principally by acting quickly to end uncertainty.
3. Technological and business arrangement innovations have the potential to provide significant consumer benefits, and HUD does not serve consumers well if its regulations unduly stifle such advancements.

On July 6, 1993, in an effort to ensure that the views of all interested parties

[1] The 1992 final rule was a marked departure from HUD interpretations in recent years. After the issuance of the May 1988 proposed rule, which led to the 1992 final rule, HUD's position, expressed in a number of General Counsel's opinions, was that an employer could not compensate its employee for referrals to other business entities (including affiliates). These opinions only indicated that an employer could compensate its employees for generating business for that employer (not to affiliates).

[2] Plaintiffs in *Mortgage Bankers Association of America* v. *United States of America,* No. 92–2699 (D.D.C.), and *Coalition to Retain Independent Services in Settlements (CRISIS)* v. *Cisneros,* No. 92–2700 (D.D.C.), filed separate actions seeking a declaration that the ''employee exception'' provision was invalid and injunctive relief enjoining implementation of this provision. The MBA suit also alleged that the CLO provision was invalid. These suits were dismissed without prejudice, that is, subject to reinstatement. A hearing regarding the Department's progress in issuing revised regulations is scheduled for October 1996.

were heard, the Department published a ''notice of written comment period and informal public hearing'' (58 FR 38176), inviting testimony and written comments on the following four provisions of the final rule:

• *Issue 1—The ''employer-employee'' exemption.* Section 3500.14(g)(2)(ii) of the 1992 final rule, which provided that Section 8 of RESPA does *not* prohibit ''an employer's payment to its own employees for any referral activities * * *.''

• *Issue 2—The ''computer loan origination'' (CLO) exemption.* Section 3500.14(g)(2)(iii) of the 1992 final rule, which provided that Section 8 of RESPA does *not* prohibit ''any payment by a borrower for computer loan origination services, as long as the disclosure set forth in appendix E is provided the borrower.''

• *Issue 3—Preemption policy.* Section 3500.13(b)(2) of the 1992 final rule, which provided that ''in determining whether provisions of State law or regulations concerning controlled business arrangements are inconsistent with RESPA * * * the Secretary may not construe those provisions that impose more stringent limitations on controlled business arrangements as inconsistent with RESPA, as long as they give more protection to consumers and/or competition.'' [3]

• *Issue 4—Controlled business disclosure policy.* Section 3500.15(b)(1) of the 1992 final rule, which provided for a written disclosure in controlled business situations regarding the ownership and financial relationships between referring and referred-to parties, and for certain timing and other methods for disclosure.

On August 6, 1993, HUD conducted a public hearing, which produced testimony and documents from 36 interested parties. The request for written comment generated 1,526 public comments on these four issues.

D. The 1994 Proposed Rule

Following a detailed examination of the testimony and comments, HUD published a proposed rule (59 FR 37360, July 21, 1994) [4] containing substantial revisions to the RESPA regulation. The proposed rule discussed the views expressed in response to the pre-rule solicitation of public comment and took positions on each of the earlier-presented four major issues, inviting further public comment in light of the additional revisions to the RESPA regulation that HUD was proposing.

The proposed rule reflected the Secretary's conclusion that the 1992 final rule's employer-employee exemption was too broad. In the proposed rule, HUD proposed to withdraw this exemption because it compromised the statute's purpose of protecting the consumer from being referred to settlement service providers because of financial gain to the referrer, rather than because of the quality and price of the services. The proposed rule would have removed an exemption that permitted an employer to pay employees referral fees for referrals to an affiliate business entity.[5] The proposed rule rejected the view that all employer payments to its employees for referrals to third-party settlement service providers should be exempt. When HUD viewed the payments from the perspective of the consumer, it was clear that payments by the employer to an employee, who performs settlement services, for third-party referrals were indistinguishable from payments directly from the third-party settlement service provider. While HUD has the authority to exempt all employer payments for third-party referrals under its Sections 8(c)(5) [6] or 19(a) authority, the Secretary concluded in the proposed rule, as a policy matter, that such a broad exemption was inconsistent with the purposes of RESPA. In this final rule, the Secretary is exercising this authority under Sections 8(c)(5) and 19(a) to exempt employer payments to their employees in those circumstances where adequate consumer protection exists.

In adopting the proposed rule, the Department also recognized that Congress had clearly established that controlled business arrangements were permissible under certain conditions. In the interest of avoiding undue interference with the internal operations of controlled businesses, expressly permitted under the 1983 amendments to RESPA, the proposed rule would not have prohibited the payment of bonuses and compensation to managerial employees in controlled businesses for such purposes as the generation of business among affiliates provided, however, that:

1. No employee or agent could receive compensation from his or her employer or any other source when the compensation is tied on a one-to-one basis to, or is calculated as a multiple of the number or value of, referrals of business to an affiliate business entity; and

2. The compensation of agents or employees who routinely are in direct contact with the public could not be based, in whole or in part, on the value or number of referrals made to affiliated entities.

These clarifications were designed to minimize any incentive that a person in a position to make or influence a referral might have to make a referral based on his or her own, or his or her employer's, financial interests, without requiring HUD to interfere unduly with the internal operations of controlled business arrangements.

As it relates to the regulation of payments to CLO systems, the proposed rule reflected a determination that it was desirable to amend the final rule to establish minimum standards for qualified systems, payments to which would be exempt from Section 8. Under § 3500.14(g)(3) of the proposed rule, ''qualified'' systems would have had to meet a number of specific regulatory requirements.[7] The proposed rule also asked for advice as to whether to create a similar exemption for payments by lenders to operators of ''qualified'' CLOs.

To assist in the promulgation of a final rule, the Secretary requested comments and invited information on the effect of all of the above proposals on the settlement services industry and consumers. As an additional vehicle for obtaining public input, on September 30, 1994, as part of the rulemaking process, the Department conducted an open house for operators of CLO systems to demonstrate their systems to HUD and to the public.[8]

Later in the rulemaking process, in August and September 1995, the Department convened two working group meetings of interested industry, government, and public officials, to obtain their individual input and to

[3] As discussed, *infra,* HUD announced in a July 21, 1994, proposed rule that it would not propose new rules on this issue and would consider preemption questions on a case-by-case basis. Since HUD has not changed its position on this issue, this final rule does not address the issue further.

[4] A more comprehensive discussion of the issues presented, the Secretary's initial position on further amendment of the RESPA regulations, and a summary of the hearing testimony and the comments received are contained in the preamble of the proposed rule.

[5] This proposal was consistent with congressional admonitions. *See* H.R. Rep. No. 123, 98th Cong., 1st Sess. 76 (1983) (controlled business provisions are not intended to change current prohibitions against unearned fees, kickbacks, or other things of value in return for referrals of settlement service business).

[6] In accordance with section 8(c)(5) of RESPA, HUD consulted with the other agencies listed before exercising its authority under section 8(c)(5).

[7] These requirements are described in Part II, Section C, of this preamble.

[8] Twenty-one CLO operators accepted the Department's invitation and demonstrated their systems to officials of the Department and to the public during an all-day session on September 30, 1994.

further explore the development and use of CLOs.

E. Today's Final Rule

Today's final rule addresses the comments received in response to the proposed rule and considering the comments, promulgates rules relating to Issues 1 (the employer-employee exemption), Issue 2 (payments to CLOs), and Issue 4 (controlled business disclosure format). With respect to Issue 1, the rule withdraws the employer-employee exemption and introduces three more-limited exemptions designed to recognize the variety of business organizations without doing damage to RESPA's core objective of consumer protection. On Issue 2, the rule withdraws the CLO exemption and issues a related Statement of Policy that illustrates how CLO payments and activities are analyzed under the existing and new RESPA regulations. As discussed, supra, respecting Issue 3, the proposed rule did not propose any changes to the preemption provisions, for the reasons explained in the proposed rule, and, therefore, requested no comments. On Issue 4, the rule revises the Controlled Business Arrangement Disclosure Statement.

In reading this preamble, the reader should be aware that HUD's RESPA rule was recently streamlined through a separate rulemaking (61 FR 13232, March 26, 1996). This streamlining caused several provisions of the RESPA rule to be renumbered. Except as is otherwise indicated in the context of the preamble, this rulemaking refers to provisions by their current section number, incorporating all revisions to date as a result of the streamlining and today's rulemaking.

II. Analysis of Issues in Final Rule

A. Overview of the Public Comments

The Department received 354[9] comments on the July 21, 1994, proposed rule. Of these, 100 were from attorneys, most of whom stated that they were, or previously had been, actively engaged as settlement lawyers. Only 2 comments from attorneys were identified by the writers as written on behalf of clients; the remaining 98 appeared to be individually originated comments by the attorneys or law firms on their own behalf.[10] An additional 73 comments came from bank holding companies, banks, or other mortgage lenders; comments were received from 46 real estate brokers; 34 comments were from mortgage brokers; 19 were identifiable as multi-service real estate service organizations;[11] 14 comments were from title company executives, 9 comments came from credit unions; 8 from CLO service providers; and 6 commenters identified themselves as consultants. One comment was received from a journalist, one from a mortgage insurance firm, one from a credit reporting service, and one from a student, and three comments were received from persons whose professional interest in the rule could not be determined.

Twenty-two State, local, or regional organizations representing portions of the real estate brokerage, lending, and settlement industries provided comments, as did 16 organizations classified as national advocacy organizations.

Attitudes toward the proposed rule varied greatly, not only according to the professional background of the commenters, but also according to whether a commenter was engaged in a controlled business arrangement. For this reason, lenders and other settlement service providers expressed a wide variety of views concerning the rule. The majority (but by no means all) of the comments received from real estate brokers and agents favored the existing regulatory structure (the 1992 final rule) and sought to discourage changes in the rule which, they argued, would impede their ability to provide benefits to consumers.

Issue 1 (the employer-employee exemption) attracted the greatest attention among commenters. Virtually all commenters, on both sides of the issue, were at least moderately dissatisfied with the proposed rule's revisions. Commenters who opposed *any* authorization of referral payments frequently thanked the Department for the effort made in the proposed rule to limit the practice, but virtually all of these commenters were displeased that the Department was proposing to exclude from RESPA coverage certain compensation to managerial employees in controlled businesses.

On the other hand, commenters who wanted referral payments to employees to continue to be allowable expressed strong opposition to the proposed rule's limitation on such payments. Additionally, many of these commenters asked for clarifications concerning the scope of the ''managerial'' exemption.

Issue 2 (the CLO exemption) was the second-most-frequently addressed subject. A significant minority of the commenters who addressed the issue credited the Department with a good effort at better defining ''CLO services'' in the proposed rule, and there was some positive support for the HUD definition. However, most commenters who addressed the CLO question found fault with HUD's proposed disposition of the issue, with the proposed CLO definition, or both. A wide variety of suggestions for further refinement of the definition was provided.

Issue 3 (the preemption issue) drew a few comments, even though the Department had not requested any comments on it and had determined in the July 21, 1994 proposed rule not to propose new rules on this issue. The Department stated in the proposed rule that ''setting out comprehensive and informative preemption standards present[ed] an almost insurmountable task, in the absence of a wide array of specific fact situations that are raising preemption issues.'' The Department determined to consider preemption questions on a case-by-case basis. Accordingly, the final rule does not address this issue.

Issue 4 (the controlled business arrangement disclosure statement) attracted a significant amount of comment. In general, commenters on both sides of the other issues were undisturbed by what they perceived as the somewhat minor changes in the controlled business disclosure statement that HUD proposed to adopt. There were, however, a number of technical suggestions, and significant criticism of what was regarded as the unduly negative tone of language proposed to be employed in the Appendix D format to suggest that consumers shop for services. Additionally, commenters continued to identify unresolved questions about the disclosure form and to suggest modifications of both its language and its applicability.

What follows is a more comprehensive discussion of the views expressed by the commenters on Issues 1, 2, and 4, together with the Department's rule-making decisions.

B. Issue 1: Withdrawal of Employer-Employee Exemption

1. In General

In the proposed rule, the Department proposed the *withdrawal* of the existing regulatory exemption that permits

[9] Three-hundred fifty-seven comments were received, but three were found to be duplicate copies of other comments.

[10] Not included as ''attorney comments'' were comment letters written by house counsel for banks, lenders, or other organizations communicating, through counsel, on their own behalf.

[11] It was not always clear from a commenter's remarks, or from the commenter's business letterhead, whether the commenter spoke for a multiple-service entity. Accordingly, some commenters classified here as lenders, mortgage brokers, real estate brokers, or other categories may also, in fact, be multiple-service business entities.

employers to pay referral fees to their own employees for referring settlement service business to business entities, including those within an affiliate relationship. This exemption applied whether or not employers were in an affiliate or ''controlled business'' relationship, but practically only benefited affiliate arrangements, as an employer was unlikely to compensate its employees for referrals to unaffiliated providers. The proposal included a limited exemption for payment of bonuses for managerial employees who did not deal with the public, provided such bonuses were not correlated on a one-to-one basis or calculated as a multiple of the number or value of any referral of settlement service business by the employee or the employee's organizational unit to an entity affiliated with the employer or principal.

2. The Public Comments

Virtually all of the comments from attorneys approved of the proposal to eliminate the employer-employee exemption. (About 30 percent of all the comments received on the proposed rule were from law firms providing settlement services, and the overwhelming majority of attorney comments were focused upon the employer-employee exemption.) The combined comments of the Attorneys General of 11 States commended the Department for focusing the rule's impact on consumers and for articulating, as the first of HUD's guiding principles, the protection of the consumer, rather than the mediation of industry interests. They called the proposed rule a ''vast improvement'' over the November 2, 1992, rule.

Some major industry organizations expressed support for the withdrawal of the exemption. For example, the Mortgage Bankers Association expressed its ''substantially favorable reaction'' to the changes HUD was proposing. MBA called employer-paid referral fees ''fundamentally inconsistent with the purposes of RESPA,'' and approved the proposed rule's elimination of the exemption for fees paid to employees with direct contact with consumers.

The basic premise of these commenters, who wanted a total withdrawal of the employer-employee exemption, was that Section 8(a) of RESPA should be construed to prohibit all ''compensated referrals,'' and any standard less than this bright line test opened up this civil and criminal statute to unnecessary ambiguity and uncertainty. These commenters generally maintained that no exceptions or exemptions should be made.

In contrast, comments favoring the retention of the employer-employee exemption argued that the 1992 formulation of the regulations had not yet had time to work and be measured, much less to be found insufficient. One diversified real estate, finance, management, and insurance company from Illinois argued that ''controlled business arrangements'' was an unfortunate misnomer that left the impression that great control was being exercised over consumers. The commenter's own company, it was claimed, had a ''capture rate'' of only around 14 percent of its real estate customers choosing to use its mortgage services:

> This means that at least 86 percent of those customers still seek a different mortgage provider. This hardly represents a coercive customer problem that's needing more regulation * * *. The real danger in attempting to further regulate companies such as ours [is that it] will result in reduced customer choice which we clearly provide, and retarding competition * * *

An Illinois local office of a nationwide finance organization argued strenuously that the elimination of employer-employee referral fees would change little.

> * * * [I]n the absence of any referral compensation, employees will not discontinue referring consumers to affiliate settlement service providers. This is because, when dealing with the consumer, the employee is an agent of the employer and, as such, acts in accordance with [his] employer's direction. * * * [A]rguments that not paying a referral fee to an employee will result in an employee acting independently of the employer's interests [are] simply not based on reality.

The Real Estate Services Providers Council (RESPRO), an advocate of the 1992 final RESPA rule, stated its continuing support of a regulatory environment that would permit unfettered ''one-stop shopping'' for real estate services. RESPRO favored both management compensation and front-line employee compensation based upon profits or on the amount of referred business the manager/employee was responsible for producing. HUD's proposed rule suggesting the withdrawal of the exemption in the 1992 final rule has, RESPRO commented, stifled companies from developing one-stop shopping programs in the most cost-efficient manner. The new proposed rule ''would significantly decrease cost efficiencies within diversified companies by preventing them from utilizing their own management to carry out the company's one-stop shopping goals.''

HUD's apparent objective in regulating referrals, RESPRO argued, was to eliminate the possibility of *adverse steering.* However, HUD's principal concern appears to be focused on perceived abuses in the *real estate sales industry,* and the examples of abuses cited by HUD (and by commenters responding to the earlier request for comments) involved real estate brokers and salespersons. RESPRO argued that the 1994 proposed rule's prohibition on employer-employee referral payments goes far beyond any rule necessary to reduce adverse steering, and that the rule deprives diversified companies of the efficiencies they need to lower costs to consumers and would place diversified companies at a competitive disadvantage, relative to independent competitor companies.

Comments from the National Association of Federal Credit Unions (NAFCU) also opposed the elimination of the RESPA exemption for employer-employee referral fees.

Another commenter who opposed the elimination of the exemption and stated its support for the 1992 RESPA regulation was the National Association of Neighborhoods (NAN). NAN's comments expressed concern that the proposed rule's changes would reduce competition and consumer choice by limiting the ability of one class of providers—diversified companies—to offer homebuyers services on a cost-efficient basis. NAN also expressed concern about the effect of the revisions on the Community Reinvestment Act, noting the Federal Reserve Board's earlier comments that restrictions on employee referral-based compensation might be ''detrimental to future innovations and developments in community lending.''

A mortgage finance consultant from Virginia cited recent legislative proposals in Pennsylvania that would restrict the percentage of business referrals permitted in a realtor-mortgage banker controlled business arrangement. The commenter noted that Congress had rejected similar proposals in the 1983 amendments to RESPA:

> In my experience, all of the attempts to limit CBAs have been motivated by industry, not to protect consumers or to provide lower fees or better service, but to keep another industry from entering the business. I would urge HUD to ensure that congressional intent is followed by allowing CBAs to exist in the states unfettered by the kinds of restrictions that were rejected in the 1983 CBA amendments to RESPA.

Many supporters of controlled business arrangements reiterated their earlier contentions that ''one-stop

shopping'' leads to greater efficiency in the settlement process and to cost-savings for borrowers. Several of these commenters objected strongly to the proposed withdrawal of the employer-employee exemption, and urged that the Department reconsider and retain the existing employer-employee exemption.

The National Association of Realtors (NAR) supported HUD's clarification of the meaning of the November 2, 1992 rule, as set forth in the preamble of the July 21, 1994 proposed rule, which indicated that real estate agents were normally ''independent contractors'' and therefore not employees within the meaning of the rule. Such agents, therefore, could not receive referral-based compensation. NAR counsel, however, requested clarification that an employer *may* legitimately compensate its own employees ''for the generation of its own business.'' Another commenter (Commercial Credit Corporation) wanted a clarification in the final rule that RESPA did not apply to the compensation arrangements for the generation of settlement service business by either an employee or an agent of a settlement service provider, in a particular multi-layered business structure, who originated settlement services business exclusively for that settlement service provider.[12]

3. The Final Rule's Approach—Overview

After a complete review of all comments and points of view, the Department withdraws the broad employer-employee exemption. HUD has determined that a broad exemption, as contained in the 1992 rule, unnecessarily allows persons who serve consumers and gain their trust to receive referral fees, in contravention of the express intent of Congress in enacting Section 8(a). However, to allow controlled business arrangements to operate and provide beneficial services and packages of services to consumers, the rule establishes three exemptions for permissible payments by employers to *bona fide* employees. Specifically, the exemptions permit employer payments to their own *bona fide* employees for referrals of business *if*:

(a.) The employee is a managerial employee, and the payment is not calculated as a multiple of the number or value of referrals.

(b.) The employee does not perform settlement services in any transaction; prior to the referral the employee provides the person being referred a written disclosure in the format of the Controlled Business Arrangement Disclosure Statement, set forth in Appendix D to this part; and the referral is to a settlement service provider which has an affiliate relationship with the employer or in which the employer has a direct or beneficial ownership interest of more than one percent. For purposes of this exemption, the marketing of a settlement service or product of an affiliated entity, including the collection and conveyance of information or the taking of an application or order for the services of an affiliated entity, does not constitute the performance of a settlement service. Under the exemption, marketing of a settlement service or product also may include incidental communications with the consumer after the application or order, such as providing the consumer with information about the status of an application or order; marketing may not include serving as the ongoing point of contact for coordinating the delivery and provision of settlement services.

(c.) The payment is to that employer's own employees for generating business for the employer itself—but not its affiliates. The Department believes that it was clear that such payments were permissible payments under RESPA. However, because some commenters indicated uncertainty regarding this position, and it is HUD's intent that such payments continue to be permissible, the rule clarifies the issue with a new exemption providing that payments made to *bona fide* employees for generating business for their employer are permissible under § 3500.14(g)(1)(vii). This exemption means that an employee may accept payments for referrals to its own employer. In an affiliated relationship, the employer is only the business entity for whom the employee directly works.[13]

These new exemptions provide that payments must be to a *bona fide* employee. Individuals may not be hired on a part-time basis to make referrals because of their access to consumers as settlement service providers. Sham employment arrangements, such as a title company paying a one hour ''salary'' to a real estate agent who provides a referral, and issuing a W–2 for ''services'' rendered to justify compensating a referral, are, and will continue to be, violations of RESPA.

The Secretary has authority to create exemptions under Section 19(a) of RESPA for classes of transactions as may be necessary to achieve the purposes of the Act. 12 U.S.C. 2617(a). In addition, under Section 8(c)(5) of RESPA, the Secretary may create regulatory exemptions for ''such other payments or classes of payments,'' after consulting with various Federal agencies. 12 U.S.C. 2607(c)(5). The three exemptions created under this final rule are issued pursuant to the Secretary's clear authority to create reasonable exemptions to further the purposes of the Act.

In creating these new exemptions, HUD is not directly regulating wages to *bona fide* employees. Rather, HUD is creating an exemption for certain payments within an employment context that otherwise would be prohibited by Section 8(a). The Secretary believes that such payments to *bona fide* employees are not designed as a subterfuge to facilitate kickbacks among affiliated companies.

The exemptions for managerial employees and employees who do not perform settlement services in any transaction are explored in detail below.

4. Managerial Employees

a. The Public Comments. Several commenters supported allowing compensation to managerial employees based on referrals and criticized the formulation regarding managerial compensation in HUD's proposed rule. NAR supported the idea of compensation for managerial employees or others who are not sales agents or otherwise involved in the direct provision of settlement services. At the same time, NAR asked that the proposed definition of ''managerial employee'' clarify that mere possession of a broker's license or a salesperson's license to sell real estate would not affect an individual's status as a managerial employee. Many States, NAR indicated, require managers in the real estate

[12] The commenter described a circumstance in which a mortgage broker entered into an exclusive agency agreement with a lender to deliver mortgage loan applications to the lender. The mortgage broker used its exclusive agents (who were not otherwise engaged in performing settlement services) to generate these loans. The commenter represented that the consumer was at all times aware of the exclusive relationship between the agent and the mortgage broker and lender principals.

Payments by a mortgage lender to its exclusive agents reasonably related to services actually performed, in the circumstances described, fall under the exemption in Section 8(c)(1)(C) and 24 CFR 3500.14(g)(1)(iii). Thus, HUD concluded that the requested clarification to address the issue raised by the commenter was not necessary.

[13] In addition, pursuant to 24 CFR 3500.14(g)(3), any person who is in a position to refer settlement service business, such as an attorney, mortgage lender, real estate broker or agent, or developer or builder, may continue to receive payments for providing additional settlement services as part of a real estate transaction, if such payments are for services that are actual, necessary, and distinct from the primary services provided by that person.

business to hold licenses as brokers or sellers.

NAR counsel, responding separately to the proposed rule on behalf of the organization, further elaborated on the national organization's position regarding referral payments. He distinguished ''primary services'' from ''secondary services,'' and argued:

> NAR recognizes that the historic and legitimate thrust of Section 8(a) of RESPA has been to prohibit compensation for referrals by persons who are ''in a position to refer settlement business,'' understood as referring to real estate professionals providing settlement services (''primary services'') to whom consumers may look for advice regarding sources of other required settlement services (''secondary services'') with the expectation that such advice will be based on professional knowledge and experience and not tainted by additional compensation payable by the highest bidder for the referral.

He suggested that HUD prohibit referral-based payments for any individual who has significant contact with consumers regarding the provision of a settlement service, where a principal part of the individual's income consists of compensation based on settlement services performed for the person's employer or an affiliate. The prohibition against sharing of compensation related to a ''secondary service,'' NAR counsel argued, could apply to all services performed by the secondary service provider and not just to specific referrals. He asserted that HUD could more easily enforce his suggestion than HUD's proposal, since HUD's rule evidently required proof of an actual ''referral'' by the initial service provider.

> * * * [A] regulation based on identification of actual referrals will likely prove unworkable, leading either to no enforcement or to adoption of presumptions that might exceed HUD's authority.

Additionally, NAR counsel argued that the proposed rule's ''managerial exemption'' would unduly complicate the ability of a diversified company to devise workable incentive compensation schemes for managers. NAR counsel further suggested a change to the definition of ''managerial employee'' to exclude situations wherein a managerial employee may, from time to time, act as a direct service provider. (In such circumstances, the NAR-suggested definition would not permit referral-based compensation in addition to the sometime-manager's commission.) NAR counsel added, in comments varying somewhat from the stated NAR position:

> In general, we do not believe that the permissibility of compensation should turn on status as an ''employee'' vs. ''independent contractor,'' provided that the independent contractor is one whose services are provided exclusively for a single principal and who is, therefore, in the eyes of the consumer, indistinguishable from an employee.

MBA stated its concern about the lack of clarity in the ''managerial employees'' exemption in the proposed rule, seeking to narrow the category of persons eligible for payments for referrals:

> We believe it is imperative to have more detail in the definition, so that the lending and real estate broker industries will know exactly where the line is between 'managerial employees' and those that have 'routine contact with the public.' For example, if a person manages a branch office and consequently has supervisory control over all of the staff that deal directly with the public, in which category does that person fall? We strongly urge that such a person [not be] eligible for the exemption because of his or her involvement with the public implicit in the supervisory role * * *.
>
> * * * [U]sing real estate offices as examples, office managers and real estate brokers can exercise considerable influence over the activities of the independent agents through manipulation of the terms and conditions of their work * * *.

MBA asked that the term ''managerial'' be further defined to include only individuals working at ''higher corporate levels'' where there would be no opportunity to steer consumers. It was urged that the definition be amended to clarify that only employees who do not work in offices where consumers regularly visit could qualify for the managerial exemption. The National Association of Mortgage Brokers (NAMB) also asked that HUD revise the rule to elaborate on the definition of ''employees'' to make clear that the term *excludes* independent contractors and real estate agents.

RESPRO favored both management compensation and front line employee compensation based upon profits or on the amount of referred business the manager/employee was responsible for producing. RESPRO claimed that the proposed rule's restrictions on compensation for managerial personnel were so vague that they would, effectively, prohibit all management compensation in one-stop shopping programs. One of HUD's Fact/Comment Illustrations in the proposed rule indicated that ''Nothing in the RESPA rule prohibits bonuses or other compensation based, in part, on the generation of business by A (a lender) to B and C (a title company and escrow company) being paid to managerial employees who are not routinely in contact with customers.'' However, RESPRO claimed, the text of the proposed rule is not consistent with the statement in the quoted Fact/Comment illustration.

The American Bankers Association (ABA) objected to the managers' compensation provision of the proposed rule as ''too narrow,'' and advocated that all employees of banking institutions should be able to receive compensation or bonuses based on their referral of business within the bank or to affiliates. Even if HUD were to retain only the managerial exemption, the rule needs modification, ABA said, to clarify the circumstances under which an employer could legitimately compensate a manager.

In contrast, many of the attorneys commenting on the rule (virtually all of whom supported the withdrawal of the employer-employee exemption) were highly critical of the proposal to allow the payment of referral-related bonuses and compensation to managerial employees in controlled businesses, under conditions set out in the proposed rule. The managerial exemption was regarded as an ''enormous loophole'' in the new rule that would substantially overwhelm the benefits these commenters expected from the proposed elimination of the exemption for fees to line employees. Typical of attorney comments received was one from an Alabama practitioner who said he ''applauded'' HUD's partial change of position ''to eliminate the objectionable 'employee bonus/kickback scheme'.'' However, the commenter said, ''by creating the manager bonus loophole, you have simply encouraged and promoted indirect schemes to circumvent basic consumer protection.'' The attorney ''implored'' HUD to ''stop playing politics with the basic rights of consumers that the Real Estate Settlement Procedures Act was designed to safeguard.'' Similar views were expressed by a Memphis attorney:

> If HUD allows bonuses to be paid to real estate managers even though the bonuses are not strictly calculated on the basis of the referral business, but merely takes it into account as a factor, the managers and the agents will find a way to tie the bonuses directly to the amount of business generated. HUD will have ''opened the door'' to the abusive practices of kickbacks, tie-ins, fee splittings, controlled business practices, and conflicts of interest that existed prior to RESPA and which RESPA has largely eliminated.
>
> Once the door is opened, everyone will stampede through it.

The American Bar Association's General Practice Section and Standing Committee on Lawyers' Title Guaranty Funds echoed the ''loophole'' complaint of other practitioners:

Prohibiting ''one-to-one'' Basis Referral Fees will not eliminate the payment of referral fees* * *. Allowing [managerial] payments* * * would be a dramatic departure from the Act's congressional intent and basically would render the previously mentioned withdrawal of the employer-employee exemption impotent.

The combined comments of the Attorneys General of eleven States opposed the proposed new ''managerial'' exemption.

HUD cannot allow compensation systems, even for managerial employees, which depend, even in part, on the level of employee referrals to affiliated companies* * *. [Managerial referral compensation] will still create strong incentives within the company to make as many referrals to affiliated companies as possible, regardless of whether those referrals are in the consumers' best interest or not.

A large number of other real estate professionals also submitted objections to the proposed modified managerial exemption. These commenters, along with most of the lawyer-commenters, believed that controlled business arrangements constituted unfair competition, or that they invariably would lead to increased costs for consumers. Whether the payment is to an employee who is in contact with the consumer for a business referral generated by that employee to the employer or to an affiliate business entity, or whether the referral-related payment is to a managerial employee, the objectors believed that the effect would be the same: A determination would be made to refer business based on the dollar benefit of the referral, rather than on considerations of what would be most advantageous to the consumer.

Similar views were expressed by a New Jersey real estate broker who said that he was ''strongly in favor of any changes in RESPA which would ban payments for referrals from mortgage lenders, title insurers, escrow agents and other real estate settlement service providers.'' ''[I]t would seem very obvious,'' the realtor wrote, ''that payment of referral fees would result in the agent selecting the service provider.''

The Coalition to Retain Independent Services in Settlements (CRISIS), an organization of independent settlement service providers, responded to the proposed rule's referral provisions arguing for a *total* ban on referral fees and referral-based compensation factors to employees *and* managers. Consumer Federation of America also called for a total ban on referral-based compensation involving affiliate entities, as did the National Association of Mortgage Brokers (NAMB).

b. The Final Rule's Approach. The rule revises the proposed rule's formulation and defines a ''managerial employee'' as one of a limited class of employees who do not routinely deal with the public, but who function in a management or executive capacity. It makes permissible certain bonuses and payments to these managerial employees. Active real estate agents, who are independent contractors, cannot be managerial employees, although a managerial employee can hold a real estate brokerage or agency license. HUD agrees with NAR counsel that managers' ''mere status as licensed brokers or salespersons should not exclude them from being 'managerial employees' if their principal functions'' are the types of managerial functions indicated in the definition, rather than face-to-face dealings with consumers.

The rule provides that managerial employees in controlled business arrangements may be paid bonuses based on performance criteria, including profitability, capture rate or other thresholds, but the bonus may not be directly calculated as a multiple of the number or value of settlement transactions referred to a business entity in an affiliate relationship. Thus, for example, the final rule does not prohibit a managerial employee from receiving an annual bonus based on an affiliate business entity capturing a percentage of the business from the managerial employee's unit (*e.g.*, a $1,000 bonus for an affiliated lender's 10% capture rate of real estate brokerage customers and a $2,500 bonus for a 20% capture rate). Managerial employees may not, however, receive a bonus or other compensation calculated as a multiple of the number or value of referrals of settlement service business to a business entity in an affiliate relationship. Thus, a compensation system that awarded a managerial employee $20 for every referral continues to be prohibited, as would a compensation system that awarded a managerial employee $100 for every 5 referrals.

In the rule, the phrase ''does not routinely'' is used to establish a ''*de minimis*'' standard for consumer contact. HUD intends the phrase ''does not routinely'' to mean that managerial employees who occasionally deal with consumers, which is almost inevitable in small offices, are not precluded from receiving year-end bonuses because of this minimal contact. Similarly, HUD intends this phrase to allow a managerial employee who performs and is compensated for occasional settlement services (not more than three transactions a year) to be eligible for this exemption. This standard will effectively limit the class of managerial employees who may receive these types of bonuses to those ''whose contacts with consumers are only casual or peripheral, at most, and who do not occupy the special positions of trust, arising from their relationship to consumers as well as the arcane nature of certain of the services required, that are developed by real estate agents or the comparable providers of other services,'' as suggested by NAR.

HUD has chosen to use its exemption authority under Section 8(c)(5), having consulted with other Federal agencies as required by that provision, as well as the authority under Section 19(a) of RESPA to permit these payments which would otherwise be prohibited by the statute. As noted in the proposed rule (59 FR at 37365), Congress has clearly determined that RESPA does not prohibit controlled business arrangements, with certain conditions. The final rule's exemption permitting managerial employees to receive payments of a bonus based on criteria relating to performance conforms with Congress's intent to permit controlled business arrangements to operate.

This exemption is appropriate because managers do not routinely deal directly with consumers. Therefore, the manager is not in a position of trust with the consumer to directly influence the consumer's choice of settlement service providers. By providing this exemption, the regulation will not require HUD to interfere unduly with the internal operations of controlled business arrangements. The exemption reflects the Department's acknowledgement that it would be difficult to enforce RESPA in circumstances which would require detailed scrutiny of complex compensation arrangements for management in affiliated settings.

The exemption draws a line, however, for payments to managers that are transaction based. This regulation does not allow payments to managerial employees which mimic referral fees. Thus, where a payment of a bonus to a managerial employee is calculated as a multiple of the number or value of referrals of settlement service business to an entity in the controlled business arrangement, it would appear to be a payment in violation of the Act and contrary to the intent of Section 8(a).

The foregoing provisions have been amplified by a revised Illustration 12 that is being added to Appendix B.

5. Employees Who Do Not Perform Settlement Services in Any Transaction

a. The Public Comments. Several commenters advocated, either directly or indirectly, that the rule allow businesses to pay bonuses for referrals to business entities in affiliate relationships to those employees who do not perform settlement services. Many of these comments focused on the way in which a host of Federal and State regulations affect the way particular industries do business and are structured. These comments urged HUD to allow compensation systems which are sensitive to these structures.

ABA criticized HUD's proposed rule as insensitive to the structure of banks, noting that, under the proposed rule, if the loan were made by the bank itself, employees could be compensated for generating that business, but if the loan were made by a subsidiary mortgage company, such compensation would be a prohibited referral fee.

> Individuals seeking a residential mortgage loan who enter a bank and inquire as to the availability of such a loan do so voluntarily with the goal of receiving information and possibly applying for and obtaining such a loan. Whether or not the bank is structured * * * to process such loans within the bank, the bank holding company or a subsidiary or affiliate of each makes *absolutely no difference to the consumer and in no way affects his or her decision * * * whether or not to do business with the bank * * *.* Providing information in order to expedite the customer's objective is appropriate and beneficial to all parties. The structure of the mortgage lending operation within the bank, its affiliate, or within the bank holding company is inconsequential and shouldn't trigger any RESPA activity.

Other banker-commenters echoed the ABA's concern that the proposed rule's referral-related modification was a poor fit for the varied structures of banks and their integrated or affiliated real estate service entities. A Minnesota bank holding company was among several banking organizations arguing that there was a fundamental difference between a referral by a bank employee to the bank's mortgage lending affiliate, and the type of referral that might involve another party to a real estate transaction, *e.g.*, from a real estate agent to a mortgage lender:

> If an individual contacts a bank to inquire about a mortgage loan * * * it is because the individual perceives the bank as a lender that would offer that type of loan. The customer is not going to the bank because he or she is seeking an objective, unbiased referral to another lender. The customer * * * expects that whatever bank they talk to will promote its own products. If that bank *does* offer [mortgage loans] they would simply proceed to give information to the potential customer * * * If, however, a bank holding company [has formed] a separate subsidiary to handle * * * mortgage lending[,] the proposed rules add additional burdens to that bank by limiting its ability to design a compensation system for managers that promotes the affiliate relationship and by requiring an additional layer of disclosure.
>
> * * * [E]xcessive requirements place the bank with a separate mortgage lending subsidiary at a disadvantage compared to banks that * * * offer such products within the bank itself.

ABA also asked that HUD reconsider this aspect of the rule in light of the strong framework of existing bank regulation, State and Federal:

> Unless appropriately modified, this proposed regulation penalizes banks, their affiliates, bank holding companies * * * solely because of their corporate structures. These structures have been specifically authorized by statute, implemented by state or federal bank regulatory authorities and constantly monitored and examined for safety and soundness and compliance purposes.

ABA asserted that the HUD regulation effectively applies only to banks and other banking institutions:

> It is only these institutions which will be examined on a periodic basis by bank examiners for compliance with this regulation. HUD does not maintain its own compliance examiners for non-bank settlement service providers. Other settlement service providers do not and will not face this intensive examination process.

ABA recommended that bank examiners not be required to examine for this aspect of RESPA compliance—unless HUD intends to provide similar supervision and enforcement for settlement service providers other than banks.

Finally, ABA's comments indicated that banks are encouraging employees to focus attention on compliance with the Community Reinvestment Act (which encourages residential lending activity in the banks' immediate service areas and neighborhoods). Many banks, ABA claimed, find it advantageous to structure lending programs to provide financial incentives to their employees to promote Community Reinvestment Act objectives. The proposed rule would eliminate these incentives arbitrarily, ABA stated.

A comment from the Securities Industry Association (SIA) similarly objected to the proposed change in the referral fee rule. Some SIA members, the comment said, are part of diversified services firms, with mortgage lending affiliates. SIA believed that referrals made by securities firms' representatives should be distinguished from those made by employees of entities whose business is to perform settlement services. The commenter argued that the potential harm to consumers that HUD is attempting to deal with as ''inherent'' in referrals made by persons performing settlement services is *not* present when the referring individual is a registered securities representative. SIA requested reconsideration, or an express exemption from the rule applicable to employees of securities firms.

Virtually all commenters who objected strongly to the proposed withdrawal of the existing employer-employee exemption, also approved of the proposed rule's retention of an exemption, albeit in a modified form. For example, RESPRO recommended that the (old) employee compensation exemption be retained, but modified to exclude any real estate agent, sales associate, or other person who assists consumers with the listing or purchase of a home, and who has regular and meaningful contact with consumers. This, RESPRO argued, would achieve the HUD policy objective of discouraging adverse steering *by real estate agents*, without interfering with the cost efficiencies of diversified companies.

Several commenters also specifically advocated that the rule allow businesses to pay bonuses for referrals to business entities in affiliate relationships, to those employees who are financial service representatives (FSRs), *i.e.*, persons employed in affiliate businesses to cross-market products. RESPRO argued that HUD's proposed rule would place diversified companies at a competitive disadvantage to their independent competitors by preventing them from compensating salespersons who offer more than one of the company's products or services, in the same manner as their independent competitors. Whereas independent mortgage, title, and homeowners insurance companies follow the traditional practice of encouraging a salesperson's productivity by paying him or her on a commission basis, HUD's proposed rule would result in diversified companies either having to hire less productive salespersons (persons who could not be compensated based on commissions which encourage productivity), or to pay three separate employees (instead of one) to offer three separate services (so they can properly motivate the FSR). RESPRO urged that HUD's final rule allow a broad array of compensation to management and employees for developing and implementing one-stop shopping, including: (1) the hiring and compensating of a financial services manager, *i.e.*, a branch manager who is

responsible for supervising the performance of the real estate agent, title agent, mortgage loan officer, and other persons performing settlement services; and (2) the hiring and compensating on a commission basis of a ''customer services representative'' or ''financial services representative'' who is not a real estate agent, but ''who markets more than one settlement service (not real estate brokerage)'' either in or outside of a real estate office.

NAR counsel urged that HUD place no restrictions on the compensation of employees whose function is to promote sales of ''secondary services'' (*i.e.,* other settlement services) provided by affiliates at the point of sale of ''primary services.'' NAR counsel commented, ''Notwithstanding that these individuals have direct contact with consumers, we do not believe that they are in positions to develop the special relationships of trust and expectation that are developed by the 'primary service' providers.''

b. The Final Rule's Approach. In response to these comments, the final rule allows a limited exemption for an employer's payment to *bona fide* employees who do not perform any settlement services,[14] so long as prior to the referral, the consumer is provided with a written disclosure in the format of Appendix D. This exemption will cover at least two situations frequently mentioned in the comments. First, this exemption will allow employers to pay their own *bona fide* employees who are not involved in the provision of settlement services, such as securities sales persons or bank tellers, for referrals of settlement service business to business entities in affiliate relationships. This approach achieves substantially the same result recommended by counsel to the NAR.

Second, this exemption will allow employers to pay their own *bona fide* employees, whose primary function is to market the services of the affiliates of the employer. Employees who perform settlement services remain subject to Section 8's prohibitions. However, as with a managerial employee who holds a real estate license, a securities sales person or bank teller who holds a mortgage broker license would not be precluded from qualifying for the exemption, if the securities sales person or bank teller is not actually involved in the provision of settlement services.

The exemption created here establishes a test: if an employer's payment is to an employee who does not perform settlement services in any transaction, the exemption applies and payments are not subject to Section 8 scrutiny so long as the disclosure is made.

A primary purpose of RESPA is to prevent consumers from being unwittingly steered (in exchange for referral payments) by one settlement service provider to other particular settlement service providers. Although the statute, on its face, covers all referrals of settlement service business, regardless of who makes the referral, Congress did not express as high a level of concern about the referral activities of those who do not perform settlement services. The Department believes that the structure of affiliated businesses, particularly in the financial services industry, wherein services are often divided among different affiliates, is frequently a response to State and Federal laws, such as the Bank Holding Company Act, rather than an attempt to circumvent RESPA. The Department believes that the industry should not be unnecessarily disadvantaged in competition by its mandated or chosen business structure. Thus, HUD has chosen to use its exemption authority under Section 8(c)(5) and Section 19(a) of RESPA to permit these payments otherwise prohibited by the statute.

This exemption only covers payments made by the employer, not by the party to whom the settlement service business is referred. It also only applies to payments for referrals to affiliate business entities. Further consideration should be given to a broader exemption for payments to those who do not perform settlement services received directly from either: (1) An affiliated party receiving the referral; or (2) an unaffiliated party receiving the referral. However, these issues were not raised by this rulemaking and the record is insufficient to determine the impact of such changes.

A similar proposal is included in legislation currently under consideration in the United States Senate. This legislation would allow anyone who does not receive another fee in the particular transaction to receive a referral fee from any source. The stated purpose of the proposal is to exempt from RESPA coverage ''co-branding'' and ''affinity marketing,'' as such payments are known in the industry. The Department believes that this proposal also could be accomplished by regulation, using HUD's exemption authority under Section 8(c)(5) and Section 19(a) of RESPA. However, both approaches—an exemption for all payments to those not performing settlement services or an exemption for all payments for those not receiving another fee in the transaction—require further scrutiny. While it is desirable to facilitate business generation where there is little danger of the adverse steering that RESPA was designed to prevent, it is important to ensure that loopholes are not created through which such adverse steering can slip. HUD intends to undertake further rulemaking on this subject and to seek public comments.

The Department also recognizes the market trend, described particularly in RESPRO's comments, that many companies are choosing to hire one or more individuals whose primary function is to generate business for his or her employer and affiliated companies. Such individuals are sometimes referred to as marketers or customer or financial service representatives.

In response to these realities, the Department has created an exemption sufficiently broad to allow an employer's payments to its *bona fide* employees whose primary function is to generate business for entities within an affiliated relationship with that employer. The Department has restricted this exemption to payments to those who do not perform settlement services in any transaction including, for example, those settlement services of a real estate agent, loan processor, settlement agent, attorney, or mortgage broker. For purposes of this exemption, the marketing of a settlement service or product, including the collection and conveyance of information or the taking of an application or order for the services of an affiliate does not constitute the performance of a settlement service. Under the exemption, marketing of a settlement service or product also may include incidental communications with the consumer after the application or order, such as providing the consumer with information about the status of an application or order; marketing may not include serving as the ongoing point of contact for coordinating the delivery and provision of settlement services.

As discussed above, the Department's review of the legislative history revealed that steering of unsophisticated consumers from one settlement service

[14] Section 3(3) of RESPA (12 U.S.C. 2602(3)) and 24 CFR § 3500.2 define the term ''settlement services''. However, for purposes of this exemption, the marketing of a settlement service or product of an affiliated entity, including the collection and conveyance of information or the taking of an application or order for the services of an affiliated entity, does not constitute the performance of a settlement service. Under the exemption, marketing of a settlement service or product also may include incidental communications with the consumer after the application or order, such as providing the consumer with information about the status of an application or order; marketing may not include serving as the ongoing point of contact for coordinating the delivery and provision of settlement services.

provider to other settlement service providers was a substantial congressional concern. A settlement service provider frequently is trusted by the consumer and appears to the consumer to be an expert in the settlement process and to have the consumer's interests in mind. If a person performing settlement services is also receiving compensation for referring business to another settlement service provider, there is a potential conflict of interest. The consumer's trust in the person performing settlement services may cause the consumer to lose any natural wariness he or she might otherwise have of following the advice of a salesperson who derives income from sales performance. The consumer might ignore the conflict of interest because of trust that has accrued from the provision of another settlement service. A person who is not performing a settlement service, but is merely marketing the affiliated companies, is less likely to attain trusted-advisor status concerning the transaction. The consumer is more likely to be aware of and weigh carefully the incentives of a person who is not performing a settlement service but is generating business for that person's own employer and its affiliates. The application of the rule's prohibition to *all* settlement service providers, whether involved in the specific settlement or not, prevents two providers from swapping referrals.

The Department is also requiring that disclosure of the affiliate relationship be provided to the consumer when the referral is made, so that the consumer will be alerted to the affiliate relationship, be informed of the potential business interest of the employee making the referral, and be able to make an educated decision about whether to use the recommended provider or another. Finally, the Department is requiring that, for the exemption to apply, the referral of settlement service business be to a settlement service provider that has an affiliate relationship with the employer or in which the employer has a direct or beneficial ownership interest of more than one percent. This requirement is consistent with congressional intent to allow controlled business arrangements and is responsive to comments indicating that the circumstances described in the exemption are those in which an exemption would be most beneficial. Where these requirements are met, the Department believes the consumer is adequately protected. The Department, therefore, has used its exemption authority under Section 8(c)(5) and Section 19(a) of RESPA to permit these payments otherwise prohibited by the statute.

The foregoing provisions have been amplified by revised Illustrations 11 and 12 which are being added by this rule to Appendix B.

C. Issue 2: Computer Loan Origination Systems (CLOS)

1. Background

The 1992 final rule specifically exempted from RESPA's coverage any borrower payment for computer loan origination systems or CLOs. The exemption was intended to prevent RESPA's restrictions against unearned fees from unduly inhibiting the development of technology which could permit consumers to shop, apply for or obtain mortgage loans electronically. A CLO system was not defined in the 1992 rule.

2. The Proposed Rule, CLO Demonstration and CLO Working Groups

In response to the earlier comments, the proposed rule undertook to establish minimum standards for a system falling within the exemption. HUD proposed to designate such CLO systems as ''qualified CLOs.'' Payments by consumers to such systems would not then be ''scrutinized under RESPA.'' A ''qualified'' system would:

(a.) Provide openings for 20 or more lenders offering various loan products;

(b.) Utilize selection factors for lenders that are fair and impartial and are designed to contribute to the efficiency and quality of the system;

(c.) Provide borrowers information in a lender-neutral manner;

(d.) Provide borrowers a CLO disclosure form before CLO services are performed;

(e.) Charge all borrowers using the system the same CLO access fee(s) for the same service or the same components of service; and

(f.) Be allowed to charge lenders for access only if charges are set forth in a written schedule of charges, charges for the same services and components of services are the same for all lenders on the system, and charges for the same services are reasonably related to the costs of maintenance and operation of the qualified CLO system.

The proposed rule asked for advice on whether to create a similar exemption for payments by lenders to ''qualified lender'' CLOs, or whether to leave such systems to be governed by the general rules of RESPA regarding kickbacks, unearned fees and referral fees.

As an additional vehicle for obtaining public input, on September 30, 1994, as part of the rulemaking process, the Department conducted an open house for operators of CLO systems to demonstrate their systems to HUD and to the public. Twenty-one CLO operators accepted the invitation and participated in this all-day demonstration in Washington, D.C. At the demonstration, the capabilities of the systems, the number of lenders displayed, the arrangements for payment, among other characteristics, differed widely.

3. The Public Comments

The public comments received on the proposed rule reflected a wide array of criticisms that suggested continuing problems with the rule's approach, or that indicated that the CLO definition HUD had arrived at would not work under particular circumstances. Additionally, a few commenters (including RESPRO, NAR, and separate comments by NAR counsel) not only questioned the particulars of HUD's CLO proposal, but also suggested that the Department lacked adequate authority under Section 8(b) of RESPA to establish ''qualified'' or ''non-qualified'' CLO systems by regulation, as proposed.

NAR and several individual commenters advocated that the rule should distinguish computer systems that merely provided basic information about prospective lenders (*e.g.*, a comparison of current interest rate quotations for particular mortgages) and those systems that actually may be said to ''originate'' loans by means of qualification (or at least, pre-qualification) of borrowers.[15]

Many commenters objected to the proposed rule's requirement that a borrower's payment for CLO services be made ''outside of and before closing,'' arguing that this requirement would dampen or completely destroy the market for CLO services, and that determining the appropriate timing of the borrower's payment would create ambiguities and resulting compliance difficulties. The combined comments of the State attorneys general objected to the proposed rule's concept of ''qualified'' and ''non-qualified'' CLOs and suggested, instead, that HUD permit *only* qualified CLOs to operate at all.

The several most-frequently raised CLO issues are summarized below.

a. The Legal Issue. RESPRO, NAR, and others raised the issue of HUD's authority to establish minimum standards (i.e., a ''safe harbor''

[15] See further discussion later in this Issue 2 section, under heading (g), ''Other CLO Issues Raised by Commenters''.

exemption) and to subject non-qualifying CLO systems to scrutiny. Noting that the proposed rule cited Section 8(b) of RESPA as a basis of HUD's authority to regulate in this area and to prohibit a CLO operator from accepting a payment from a borrower for a sham or duplicative charge, these commenters argued that Section 8(b) of RESPA was inoperative as authority for regulating CLO payments unless the CLO operator shared fees with a third party.

According to the commenters, Section 8(b) governs *only* a ''portion, split, or percentage'' of any charge made or received. If the CLO operator is the only party charging or receiving a fee for CLO-related services, the commenters argued, then Section 8(b) cannot be the authority for the proposed borrower payment exemption ''safe harbor'' or for regulating non-qualifying CLOs. The commenters cited as authority for this position certain judicial precedents.

HUD is aware of these cases, which never involved HUD as a party, but finds their reasoning not to be persuasive or their holdings not to be determinative of the issue. HUD believes that Section 8(b) of the statute and the legislative history make it clear that no person is allowed to receive ''any portion'' of charges for settlement services, except for services actually performed. The provisions of Section 8(b) could apply in a number of situations: (1) where one settlement service provider receives an unearned fee from another provider; (2) where one settlement service provider charges the consumer for third-party services and retains an unearned fee from the payment received; or (3) where one settlement service provider accepts a portion of a charge (including 100% of the charge) for other than services actually performed.

The interpretation urged, that a single settlement service provider can charge unearned or excessive fees so long as the fees are not shared with another, is an unnecessarily restrictive interpretation of a statute designed to reduce unnecessary costs to consumers. The Secretary, charged by statute with interpreting RESPA, interprets Section 8(b) to mean that two persons are not required for the provision to be violated. HUD, therefore, had adequate authority to promulgate the rule it proposed, although it has chosen not to do so.

b. Impact on Mortgage Brokers. On the merits of the CLO proposal, the Mortgage Bankers Association and many other commenters were alarmed about possibly unintended effects of the CLO provisions on mortgage brokers. First, MBA feared that merely by using a computer in its activities, a mortgage broker could be deemed a CLO operator, since mortgage brokers typically perform many or all of the functions set out in the ''CLO system'' definition contained in § 3500.2 of the proposed rule. MBA anticipated that mortgage brokers might therefore find themselves faced with a new disclosure requirement (relating to CLO systems) that HUD probably did not intend. Revision of the definition was urged to clarify this point.

c. Time of Payment for CLO Services. RESPRO, NAR, and many other commenters strenuously objected to the requirement in the proposed rule that for a system to qualify, payment for CLO services be ''outside of and before'' loan closing.

d. Twenty-Lender Requirement. RESPRO and a large number of individual commenters objected to the proposed rule's requirement that CLO systems provide access to at least 20 lenders. RESPRO asserted that its members, as well as CLO operators, uniformly believed that 20 lenders would constitute ''information overload'' and would discriminate against small and local CLO operators. Other commenters reflected that 20 lenders, each offering, perhaps, multiple variations of mortgage loan packages, would overtax a CLO system and increase its operating costs, to no useful purpose. Consumer Federation of America was among the very few commenters who suggested that access by 20 lenders would be inadequate.

e. Lender-Pay Systems. The Attorneys' General comment objected to the fact that the rule did not prohibit lenders from paying for CLO services, viewing lender-paid services as ''harboring the same potential for consumer abuse as direct kickbacks.'' MBA also opposed permitting lender-paid fees, arguing that they constitute hidden costs to the consumer. Consumer Federation of America strongly objected to lender payments, saying that they would place consumers at ''great risk of being steered into noncompetitive products.'' Conversely, comments from the National Association of Federal Credit Unions (NAFCU) urged HUD not only to create a parallel exemption for payments by lenders for qualified CLO systems, but suggested that HUD not intervene in setting lender-CLO operator fee schedules. NAFCU believed that negotiated fees for CLO services to lenders would promote competition.

f. ''Information'' vs. ''Origination''. NAR and numerous other commenters urged that a sharp distinction be made in the rule between computer loan *information* systems (dubbed by NAR and others as ''CLIs'') and computer loan *origination* systems (''true'' CLOs), with which a computer link-up can be made with lenders and a genuine loan-application-approval process originated. Another commenter similarly explained that vast differences existed in the functions and sophistication of ''loan origination technology,'' ranging from relatively simple information transmittal systems to ''electronic decision makers'' that utilize artificial intelligence. These latter systems, the commenter claimed, were essentially computer underwriting systems. The commenter went on to recommend that HUD narrow its CLO definition to require that qualified systems not only collect data, but evaluate it.

g. Other CLO Issues Raised by Commenters. A nationwide finance organization believed that the CLO system definition should *not* require the transmission of information concerning a prospective property. CLO systems offer the same benefits to consumers in the *pre-qualification* stage, the commenter asserted.

Comments on the issue of CLO-related disclosures varied greatly. Commenters sympathetic to the regulatory scheme proposed for CLOs were also supportive of the form of disclosure, although some additional disclosures were occasionally suggested. Commenters otherwise critical of HUD's definition, the proposed CLO regulatory scheme, or other aspects of the proposal tended to object as well to the form of disclosure proposed. Generally, objections to the CLO disclosure format were mild, except the American Bankers Association and a few other commenters specifically objected to the ''acknowledgement box'' requirement for the same reasons that consumer-acknowledgement procedures were objected to in connection with the controlled business arrangement disclosure statement.[16]

4. Working Group Meetings

After review of all of the comments and the information gleaned from the technology demonstration, HUD believed that it did not have sufficient information on CLOs and how they were actually functioning in the provision of services to consumers. Accordingly, HUD convened the first of two CLO working group meetings on August 11, 1995, in Washington, D.C. Participants included CLO vendors, related industry associations, State regulators, consumer groups, and

[16] See discussion of CBA disclosure statement format under the heading ''Issue 4'' elsewhere in this preamble.

individual advocates. The purpose was to get their individual input on CLO issues.

The working group examined a number of CLO trends and CLO systems and identified the types and characteristics of CLOs currently operating. Presentations were made regarding several operating systems, as well as the Federal National Mortgage Association's (Fannie Mae's) Desktop Underwriter and the Federal Home Loan Mortgage Corporation's (Freddie Mac's) Loan Prospector. Views expressed by one or more members of the group included:

- CLOs are merely a technology for automating the loan process and not necessarily an independent settlement service.
- There should not be a special exemption for CLO services.
- A separate set of disclosures for CLOs and CLIs should not be created, but consumers should be given understandable and meaningful disclosures.
- HUD should not attempt to set rates.
- HUD should define the level of service that must be performed in the origination process in order to receive compensation.

Many participants argued that HUD should not attempt to regulate, define, or set standards for an evolving technology. Many argued that greater clarity about how the RESPA regulations applied to loan originations would be preferable to a separate exemption or ''safe harbor,'' for which HUD set required characteristics by regulation. At the conclusion of the first meeting, the group agreed to meet again and discuss further the development of CLO technology.

HUD held a second working group meeting on September 26, 1995. At this meeting, many also argued again that the RESPA regulations should apply equally to all participants in the market, regardless of their use of technology, and that the applicable test should be whether the fees paid were for services actually performed. Many in the group believed that HUD should provide additional guidance about how this basic RESPA test applies in the CLO context. Some participants criticized a distinction between services paid for by lenders and services paid for by borrowers, arguing that the borrower was the final source of funds for all services. State regulators also discussed the licensing and other requirements applicable to CLOs in many jurisdictions.

5. The Final Rule's Approach

After further internal review and discussion, the Department determined to abandon the approach taken in the proposed rule, withdraw the CLO exemption that had been contained in 24 CFR 3500.14(g)(1)(viii),[17] and replace it with guidance analyzing the application of RESPA and the RESPA regulations to common CLO issues. The final rule also withdraws Appendix E, the CLO disclosure.

Simultaneously with the publication of this final rule, the Department is issuing a Statement of Policy. That Statement of Policy, issued under § 3500.4(a)(1)(ii), is being published in today's Federal Register and constitutes a ''rule, regulation, or interpretation'' within the meaning of Section 8.

D. Issue 4: CBA Disclosure Form

1. The Public Comments

Proposed changes in the controlled business disclosure form also attracted significant attention from commenters. Eleven Attorneys General commended the Department for accepting most of the suggestions made by State Attorneys General in the earlier round of public comment on RESPA regulations. However, the Attorneys General questioned whether the addition of a borrower acknowledgement box on the form is helpful and suggested it may actually prove harmful:

> * * * While it may appear that such a box induces the consumer to read the disclosures, in fact, it may be just one more document in a blizzard of such forms which the consumer signs. It is likely that lenders will find this acknowledgement more useful than consumers and will attempt to use the acknowledgement in defending any suits by consumers who feel they have been misled.

A few commenters affirmatively supported the revised disclosure statement requirement as appropriate and useful.

Other commenters, however, were more critical of the content of the revised disclosure statement. Especially singled out for criticism was the required statement ''YOU MAY BE ABLE TO GET THESE SERVICES AT A LOWER RATE BY SHOPPING WITH OTHER SETTLEMENT SERVICE PROVIDERS, AND THIS IS SOMETHING YOU SHOULD CONSIDER DOING.''

A multi-service company in Massachusetts called the quoted sentence a ''negative statement'' that would discourage consumers from using an affiliated service. ''If HUD is serious about allowing diversified service providers to compete, *this statement should be eliminated.''* (Emphasis in original.) Another commenter, a Missouri attorney, objected in particular to the last phrase, ''* * * and this is something you should consider doing.''

> * * * This phrase clearly denotes that there are better services available, and that the service which will be provided by the referred settlement service would be inadequate * * *. To suggest * * * that buyers would be better off looking elsewhere, *is far beyond* protection of the consumer and actually is hinting to the consumer that there is something inherently wrong with the controlled business arrangement * * *. (Emphasis in original.)

An Iowa realty company urged that the statement be made more ''provider neutral,'' and that all mortgage service providers be called upon to provide similarly worded disclosures regarding the value of comparison shopping.

A Kansas lender complained that ''No other industry in this country is required to urge its customers to seek services elsewhere* * *.''

A Chicago title guaranty company expressed sympathy for the objectives of the disclosure statement, but agreed that the proposed rule's version implied that substandard service was being provided. The following alternative statement was offered:

> There are many providers of settlement services providing quality products at competitive rates. You are encouraged to shop around to ensure that you are receiving the best quality product at the best rate available for the same or similar services.

NAR's comments echoed the concerns of the above-quoted individual commenters by asking for a ''provider neutral'' statement and that all mortgage settlement service providers be called upon to provide similarly worded statements, ''thus preventing multiple service * * * firms from being placed at a relative disadvantage vis-a-vis other mortgage service providers.''

Several banker-commenters again pressed the point that the required disclosure statement was inappropriate for the circumstances of banks and bank holding companies. Because these organizations commonly conduct their residential mortgage lending activities through mortgage company affiliates, ''* * * the consumer that contacts the bank * * * expects to be referred to the bank's mortgage lending operations, whether that consists of a department of the bank or an affiliate.''

The American Bankers Association objected to the elaborate disclosure statement in the context of the kind of incidental and uncompensated referrals

[17] Prior to HUD's regulatory streamlining, this provision was codified at 24 CFR § 3500.14(g)(2)(iii).

involved in the bank/affiliate mortgage company operation. ''It is sufficient consumer protection,'' ABA argued, ''for banks to indicate that there might be services provided at a lower rate and not to add a statement that such shopping is recommended.''

ABA and a few individual commenters also protested the requirement that the disclosure be acknowledged in writing. A title guaranty firm made the point that documents are frequently mailed to consumers to be signed and returned, and that it is difficult to secure the return of such documents, possibly raising unnecessary doubts concerning the validity of the disclosure actually given. ABA raised several questions:

> * * * [W]hat is the status of a bank's compliance with the acknowledgment and signature requirement if only the applicant and not the co-applicant signs the acknowledgment?
>
> What efforts does the bank have to expend in order to obtain the co-applicant's signature?
>
> Should not the applicant's acknowledgement be sufficient for compliance purposes?

The process of obtaining these signatures, ABA concluded, ''creates compliance burdens for banks while providing negligible benefits to consumers.''

2. The Final Rule's Approach

After review of all comments, the Department retains the requirement of the applicants' acknowledgement. In addition to focusing the attention of the applicant on the document, the acknowledgement also protects the lender from charges that it had failed to inform the prospective borrower of the controlled business arrangement. In response to comments, only one signature is now required.

The Department has not adopted the NAR's suggestion that HUD require all settlement service providers to provide a statement encouraging consumers to shop around. The statute requires such a statement in the context of controlled businesses, but has no such requirement for any other situation. This rule only requires the disclosure in the context of controlled business arrangements.

Also, the Department reformulates the discussion of the desirability of borrowers shopping for settlement services. In response to criticism that the proposed language intimated that the services offered by the disclosing servicer might be substandard or overpriced, the Department adopts more neutral wording that continues to inform consumers of their freedom to seek the most advantageous rates or services in a competitive market. The Department remains committed to the policy that ample disclosure, a preeminent principle of the RESPA statute, is a valuable means of informing consumers and promoting competition in the settlement services industry.

The new formulation for the CBA disclosure is set forth in Appendix D. It now reads:

> You are NOT required to use [provider] as a condition for [settlement of your loan on] [or] [purchase, sale, or refinance of] the subject property. THERE ARE FREQUENTLY OTHER SETTLEMENT SERVICE PROVIDERS AVAILABLE WITH SIMILAR SERVICES. YOU ARE FREE TO SHOP AROUND TO DETERMINE THAT YOU ARE RECEIVING THE BEST SERVICES AND THE BEST RATE FOR THESE SERVICES.

E. Other Matters Raised by Commenters

1. The Public Comments

In addition to the specific comments received in response to the Department's request, some commenters raised concerns that some employers were engaging in practices of retaliation or discrimination against employees and agents for not referring business to affiliate entities. Other commenters complained that settlement service providers were being excluded from, or locked-out of, places of business where they might find potential customers. They also alleged that high-priced real estate office space arrangements with particular lenders, frequently coupled with lock-out arrangements, raised RESPA concerns.

2. The Final Rule's Approach

The Department determined that these issues were distinct from those raised by the proposed rule. Moreover, they do not require rulemaking, but rather an interpretation, applied to specific circumstances, of the statute and the implementing regulations. Therefore, HUD is issuing a separate Statement of Policy on the issues of retaliation, lock-outs, and appropriate office rents to provide the guidance sought by so many commenters. That Statement of Policy is being published in today's Federal Register, simultaneously with the publication of this final rule.

Other Matters

Environmental Impact

A finding of no significant impact with respect to the environment has been made in accordance with HUD regulations in 24 CFR part 50 that implement section 102(2)(C) of the National Environmental Policy Act of 1969 (42 U.S.C. 4332). The finding is available for public inspection during regular business hours in the Office of General Counsel, the Rules Docket Clerk, room 10276, 451 Seventh Street, SW, Washington, DC 20410.

Executive Order 12866

This final rule was reviewed by the Office of Management and Budget under Executive Order 12866, Regulatory Planning and Review. Any changes made to the rule as a result of that review are clearly identified in the docket file, which is available for public inspection at the Office of the Rules Docket Clerk, Office of General Counsel, Room 10276, Department of Housing and Urban Development, 451 Seventh Street, SW, Washington, D.C. 20410–0500. An Economic Analysis (EA) performed on this proposed rule is also available for review at the same address.

Regulatory Flexibility Act

The Secretary, in accordance with the Regulatory Flexibility Act (5 U.S.C. 605(b)), has reviewed this rule before publication and by approving it certifies that this rule does not have a significant economic impact on a substantial number of small entities, other than those impacts specifically required to be applied universally by the RESPA statute. An Economic Analysis prepared in connection with this rule considers the impact on small entities.

Executive Order 12612, Federalism

The General Counsel, as the Designated Official under section 6(a) of Executive Order 12612, Federalism, has determined that the policies contained in this final rule will not have substantial direct effects on States or their political subdivisions, or the relationship between the Federal government and the States, or on the distribution of power and responsibilities among the various levels of government. As a result, the rule is not subject to review under the Order. Promulgation of this rule expands coverage of the applicable regulatory requirements pursuant to statutory direction.

Executive Order 12606, the Family

The General Counsel, as the Designated Official under Executive Order 12606, The Family, has determined that this final rule does not have potential for significant impact on family formation, maintenance, and general well-being, and, thus, is not subject to review under the order. No significant change in existing HUD policies or programs will result from promulgation of this rule, as those policies and programs relate to family concerns.

List of Subjects in 24 CFR Part 3500

Consumer protection, Condominiums, Housing, Mortgages, Mortgage servicing, Reporting and recordkeeping requirements.

Accordingly, for the reasons set out in the preamble, part 3500 of title 24 of the Code of Federal Regulations is amended as follows.

PART 3500—REAL ESTATE SETTLEMENT PROCEDURES ACT

1. The authority citation for shall continue to read as follows:

Authority: 12 U.S.C. 2601 *et seq.*

2. Section 3500.2(b) is amended by adding, in alphabetical order, a definition of ''managerial employee'', to read as follows:

§ 3500.2 Definitions.

* * * * *

(b) * * *

Managerial employee means an employee of a settlement service provider who does not routinely deal directly with consumers, and who either hires, directs, assigns, promotes, or rewards other employees or independent contractors, or is in a position to formulate, determine, or influence the policies of the employer. Neither the term ''managerial employee'' nor the term ''employee'' includes independent contractors, but a managerial employee may hold a real estate brokerage or agency license.

* * * * *

3. Section 3500.8(c)(2) is amended in the fourth sentence by removing the reference ''Appendix F'' and adding in its place the reference ''Appendix E''.

4. Section 3500.14 is amended by revising the last sentence of paragraph (b), the heading of paragraph (g), and paragraph (g)(1), to read as follows:

§ 3500.14 Prohibition against kickbacks and unearned fees.

* * * * *

(b) * * * A business entity (whether or not in an affiliate relationship) may not pay any other business entity or the employees of any other business entity for the referral of settlement service business.

* * * * *

(g) *Exemptions for fees, salaries, compensation, or other payments.*

(1) The following are permissible:

(i) A payment to an attorney at law for services actually rendered;

(ii) A payment by a title company to its duly appointed agent for services actually performed in the issuance of a policy of title insurance;

(iii) A payment by a lender to its duly appointed agent or contractor for services actually performed in the origination, processing, or funding of a loan;

(iv) A payment to any person of a *bona fide* salary or compensation or other payment for goods or facilities actually furnished or for services actually performed;

(v) A payment pursuant to cooperative brokerage and referral arrangements or agreements between real estate agents and real estate brokers. (The statutory exemption restated in this paragraph refers only to fee divisions within real estate brokerage arrangements when all parties are acting in a real estate brokerage capacity, and has no applicability to any fee arrangements between real estate brokers and mortgage brokers or between mortgage brokers.)

(vi) Normal promotional and educational activities that are not conditioned on the referral of business and do not involve the defraying of expenses that otherwise would be incurred by persons in a position to refer settlement services or business incident thereto;

(vii) A payment by an employer to its own *bona fide* employee for generating business for that employer;

(viii) In a controlled business arrangement, a payment by an employer of a bonus to a managerial employee based on criteria relating to performance (such as profitability, capture rate, or other thresholds) of a business entity in the controlled business arrangement. However, the amount of such bonus may not be calculated as a multiple of the number or value of referrals of settlement service business to a business entity in a controlled business arrangement; and

(ix)(A) A payment by an employer to its *bona fide* employee for the referral of settlement service business to a settlement service provider that has an affiliate relationship with the employer or in which the employer has a direct or beneficial ownership interest of more than 1 percent, if the following conditions are met:

(*1*) The employee does not perform settlement services in any transaction; and

(*2*) Before the referral, the employee provides to the person being referred a written disclosure in the format of the Controlled Business Arrangement Disclosure Statement, set forth in Appendix D to this part.

(B) For purposes of this paragraph (g)(1)(ix), the marketing of a settlement service or product of an affiliated entity, including the collection and conveyance of information or the taking of an application or order for an affiliated entity, does not constitute the performance of a settlement service. Under this paragraph (g)(1)(ix), marketing of a settlement service or product may include incidental communications with the consumer after the application or order, such as providing the consumer with information about the status of an application or order; marketing shall not include serving as the ongoing point of contact for coordinating the delivery and provision of settlement services.

* * * * *

5. Section 3500.15 is amended by revising the introductory text of paragraph (b)(1), to read as follows:

§ 3500.15 Controlled business arrangements.

* * * * *

(b) * * *

(1) Prior to the referral, the person making a referral has provided to each person whose business is referred a written disclosure, in the format of the Controlled Business Arrangement Disclosure Statement set forth in Appendix D of this part. This disclosure shall specify the nature of the relationship (explaining the ownership and financial interest) between the person performing settlement services (or business incident thereto) and the person making the referral, and shall describe the estimated charge or range of charges (using the same terminology, as far as practical, as Section L of the HUD–1 or HUD–1A settlement statement) generally made by the provider of settlement services. The disclosure must be provided on a separate piece of paper no later than the time of each referral or, if the lender requires the use of a particular provider, the time of loan application, except that:

* * * * *

§ 350017 [Amended]

6. Section 3500.17 is amended as follows:

a. In paragraph (b), in the definitions of ''Aggregate (or) composite analysis'' and ''Single-item analysis'', by removing the reference ''Appendix F'' in the last sentence of each definition and adding in its place the reference ''Appendix E''.

b. In paragraph (c)(1)(i), in the second sentence, by removing the reference ''Appendix F'' and adding in its place the reference ''Appendix E''.

c. In paragraph (d)(1)(ii), in the last sentence, by removing the reference ''Appendix F'' and adding in its place the reference ''Appendix E''.

7. Appendix B is amended by revising Illustration 11, redesignating Illustrations 12 and 13 as Illustrations

13 and 14 respectively, and adding a new Illustration 12, to read as follows:

Appendix B to Part 3500—Illustrations of Requirements of RESPA

* * * * *

11. *Facts:* A, a mortgage lender, is affiliated with B, a title company, and C, an escrow company, and offers consumers a package of mortgage, title, and escrow services at a discount from the prices at which such services would be sold if purchased separately. A, B, and C are subsidiaries of H, a holding company, which also controls a retail stock brokerage firm, D. None of A, B, or C requires consumers to purchase the services of its sister companies, and each company sells such services separately and as part of the package. A also pays an employee T, a full-time bank teller who does not perform settlement services, a bonus for each loan, title insurance binder, or closing that T generates for A, B, or C. A pays T these bonuses out of A's own funds and receives no reimbursements for these bonuses from B, C, or H. At the time that T refers customers to B and C, T provides the customers with a disclosure using the controlled business arrangement disclosure format. Also, Z, a stockbroker employee of D, occasionally refers her customers to A, B, or C; gives a statement in the controlled business disclosure format; and receives a payment from D for each referral.

Comments: Selling a package of settlement services at a discount is not prohibited by RESPA, consistent with the definition of ''required use'' in 24 CFR 3500.2. Also, A is always allowed to compensate its own employees for business generated for A's company. Here, A may also compensate T, an employee who does not perform settlement services in this or any transaction, for referring business to a business entity in an affiliate relationship with A. Z, who does not perform settlement services in this or any transaction, can also be compensated by D, but not by anyone else. Employees who perform settlement services cannot be compensated for referrals to other settlement service providers. None of the entities in an affiliated relationship with each other may pay for referrals received from an affiliate's employees. Sections 3500.15(b)(3)(i)(A) and (B) set forth the permissible exchanges of funds between controlled business entities. In all circumstances described a statement in the controlled business disclosure format must be provided to a potential consumer at or before the time that the referral is made.

12. *Facts:* A, a real estate broker, is affiliated with B, a mortgage lender, and C, a title agency. A employs F to advise and assist any customers of A who have executed sales contracts regarding mortgage loans and title insurance. F collects and transmits (by computer, fax, mail, or other means) loan applications or other information to B and C for processing. A pays F a small salary and a bonus for every loan closed with B or title insurance issued with C. F furnishes the controlled business disclosure to consumers at the time of each referral. F receives no other compensation from the real estate or mortgage transaction and performs no settlement services in any transaction. At the end of each of A's fiscal years, M, a managerial employee of A, receives a $1,000 bonus if 20% of the consumers who purchase a home through A close a loan on the home with B and have the title issued by C. During the year, M acted as a real estate agent for his neighbor and received a real estate sales commission for selling his neighbor's home.

Comments: Under § 3500.14(g)(1), employers may pay their own *bona fide* employees for generating business for their employer (§ 3500.14(g)(1)(vii)). Employers may also pay their own *bona fide* employees for generating business for their affiliate business entities (§ 3500.14(g)(1)(ix)), as long as the employees do not perform settlement services in any transaction and disclosure is made. This permits a company to employ a person whose primary function is to market the employer's or its affiliate's settlement services (frequently referred to as a Financial Services Representative, or ''FSR''). An FSR may not perform any settlement services including, for example, those services of a real estate agent, loan processor, settlement agent, attorney, or mortgage broker. In accordance with the terms of the exemption at § 3500.14(g)(1)(ix), the marketing of a settlement service or product of an affiliated entity, including the collection and conveyance of information or the taking of an application or order for the services of an affiliated entity, does not constitute the performance of a settlement service. Under the exemption, marketing of a settlement service or product also may include incidental communications with the consumer after the application or order, such as providing the consumer with information about the status of an application or order; marketing may not include serving as the ongoing point of contact for coordinating the delivery and provision of settlement services.

Thus, in the circumstances described, F and M may receive the additional compensation without violating RESPA.

Also, employers may pay managerial employees compensation in the form of bonuses based on a percentage of transactions completed by an affiliated company (frequently called a ''capture rate''), as long as the payment is not directly calculated as a multiple of the number or value of the referrals. 24 CFR 3500.14(g)(1)(viii). A managerial employee who receives compensation for performing settlement services in three or fewer transactions in any calendar year ''does not routinely'' deal directly with the consumer and is not precluded from receiving managerial compensation.

* * * * *

8. Appendix D is revised to read as follows:

BILLING CODE 4210–27–P

APPENDIX D TO PART 3500

Controlled Business Arrangement Disclosure Statement Format

NOTICE

To: _____ **Property:** _____

From: _____ **Date:** _____
(Entity Making Statement]

This is to give you notice that ___[referring party]___ has a business relationship with ___[provider receiving referral]___. [Describe the nature of the relationship between the referring party and the provider, including percentage of ownership interest, if applicable.] Because of this relationship, this referral may provide ____[referring party]____ a financial or other benefit.

Set forth below is the estimated charge or range of charges by [provider] for the following settlement services:

_____: $_____

_____: $_____

_____: $_____

You are NOT required to use ___[provider]___ as a condition for [settlement of your loan on] [or] [purchase, sale, or refinance of] the subject property. THERE ARE FREQUENTLY OTHER SETTLEMENT SERVICE PROVIDERS AVAILABLE WITH SIMILAR SERVICES. YOU ARE FREE TO SHOP AROUND TO DETERMINE THAT YOU ARE RECEIVING THE BEST SERVICES AND THE BEST RATE FOR THESE SERVICES.

[A lender is allowed, however, to require the use of an attorney, credit reporting agency, or real estate appraiser chosen to represent the lender's interest.]*

ACKNOWLEDGMENT

I/we have read this disclosure form, and understand that ___[referring party]___ is referring me/us to purchase the above-described settlement services from ___[provider receiving referrals]___, and may receive a financial or other benefit as the result of this referral.

_____
[Signature]

* Add this paragraph only if the lender is requiring an attorney, credit reporting agency, or real estate appraiser to represent its interests.

[INSTRUCTIONS TO PREPARER: Specific timing rules for delivery of the controlled business disclosure are set forth in 24 CFR 3500.15(b)(1) (Regulation X).]

BILLING CODE 4210–27–C

9. Appendix E is removed and Appendix F is redesignated as Appendix E.

Dated: May 31, 1996.

Nicolas P. Retsinas,

Assistant Secretary for Housing-Federal Housing Commissioner.

[FR Doc. 96–14329 Filed 6–6–96; 8:45 am]

BILLING CODE 4210–27–P

---

24 CFR Part 3500

[Docket No. FR–3638–N–03]

Office of the Assistant Secretary for Housing-Federal Housing Commissioner; Real Estate Settlement Procedures Act (RESPA); Statement of Policy 1996–1, Regarding Computer Loan Origination Systems (CLOs)

AGENCY: Office of the Assistant Secretary for Housing-Federal Housing Commissioner, HUD.

ACTION: Statement of Policy 1996–1: Computer Loan Origination Systems (CLOs).

SUMMARY: This Statement of Policy sets forth the Department's interpretation of Section 8 of the Real Estate Settlement Procedures Act (RESPA) and its implementing regulations with regard to the applicability of RESPA to payments for services from certain computer systems, frequently called CLOs, used by settlement service providers in connection with the origination of mortgage loans or the provision of other settlement services covered by RESPA. This statement explains the statutory and regulatory framework for HUD's treatment of payments to CLOs.

In reading this policy statement, the reader should be aware that HUD's RESPA rule was recently streamlined through a separate rulemaking. 61 FR 13232 (Mar. 26, 1996). This streamlining caused several provisions of the RESPA rule to be renumbered. Except as is otherwise indicated in the context of the policy statement, this policy statement refers to provisions by their current section number, incorporating all revisions to date as a result of the streamlining and today's rulemaking, published elsewhere in the Federal Register.

FOR FURTHER INFORMATION CONTACT: David Williamson, Director, Office of Consumer and Regulatory Affairs, Room 5241, telephone (202) 708–4560; or, for legal questions, Kenneth Markison, Assistant General Counsel for GSE/RESPA, or Grant E. Mitchell, Senior Attorney for RESPA, Room 9262, telephone (202) 708–1550. (The telephone numbers are not toll-free.) For hearing- and speech-impaired persons, this number may be accessed via TTY (text telephone) by calling the Federal Information Relay Service at 1–800–877–8339. The address for the above-listed persons is: Department of Housing and Urban Development, 451 Seventh Street, SW, Washington, DC 20410.

SUPPLEMENTARY INFORMATION: Individuals and firms have developed and are developing various systems that employ computer technology to assist consumers in finding a lender, selecting a mortgage product, originating a mortgage, or choosing among other settlement service providers and products. These systems are sometimes called computer loan origination systems (hereafter ''CLOs''), although other terminology may be used, such as computer loan information systems. These systems differ in the way they interact with consumers, in the way they collect and display information on mortgage options, in the range of choices of products and services they provide to consumers, and in the extent to which they share work with other providers in the settlement service process. HUD expects product diversity to increase as technology evolves and new telecommunication options become available.

The following exemption was set forth in the November 2, 1992 final rule, effective December 2, 1992: Section 8 of RESPA does not prohibit * * * any payment by a borrower for computer loan origination services, so long as the disclosure set forth in Appendix E of this part is provided to the borrower. 24 CFR 3500.14(g)(2)(iii).

This exemption from Section 8 was for ''any payment by a borrower for computer loan origination services,'' as long as certain disclosures were provided. This rule did not address payments made by lenders, thus leaving such payments subject to Section 8 scrutiny. Although the term ''CLO exemption'' is frequently used, including in the preamble of the 1992 final rule, the exemption was not for the CLO itself, but only for payments made for CLO services by borrowers. The 1992 final rule did not speak to other issues; notably it did not define a CLO or explain how RESPA applies to payments by lenders to CLOs for CLO services. The November 2, 1992 rule also withdrew all previous informal legal opinions, including those stating the Department's views on various CLO issues.

In response to numerous expressions of concern about the new exemption and other aspects of the revised regulations, HUD requested public comments in a Federal Register Notice on July 6, 1993, and held public hearings on August 6, 1993.

On July 21, 1994, HUD issued proposed regulations that would repeal the general CLO exemption for borrower payments and, in its place, establish an exemption for borrower payments to certain ''qualified CLOs'', that is, CLOs having characteristics that HUD considered beneficial to consumers. The proposed exemption would apply only to payments by borrowers, but HUD did solicit public comments on whether to provide a similar exemption for payments by lenders to qualified CLOs. Under the proposed rule, payments by borrowers to CLO systems that did not qualify for the exemption were subject to scrutiny under section 8 of RESPA. HUD also invited those with active CLOs or those developing CLOs to demonstrate their systems at a Technology Demonstration Fair on September 30, 1994. Twenty-one CLO operators accepted the invitation and participated in this all-day demonstration in Washington, D.C.

The public comments in response to the proposed rule raised a number of specific questions about the proposed exemption for payments to qualified CLOs, and generally displayed skepticism or uncertainty about the usefulness of the proposal. Concerned that the comments did not adequately address all the issues, HUD held two informal meetings with industry and consumer groups to seek additional individual input on the likely future development of CLOs. These meetings were held on August 11, 1995, and September 21, 1995. While HUD learned many things from the public comments and the meetings with industry and consumer groups, one message seemed to predominate. All parties wanted clearer guidance from HUD on how RESPA's disclosure and anti-kickback provisions apply to borrower and lender payments for CLO services.

Both the 1992 and the proposed 1994 exemptions for borrower payments to CLOs were offered because of concern that uncertainty about how RESPA applied to payments to CLOs might be impeding the development or use of potentially beneficial technology. However, by limiting the exemptions to borrower payments, in both cases, HUD did not address the primary issue of how RESPA's anti-kickback provisions applied to lender payments to CLOs.

Many participants in the informal meetings urged that it was impossible to

create a useful safe harbor or exemption for ''qualified CLOs'', because changes in technology and in its use in the market would repeatedly make that safe harbor obsolete. CLO service providers would take their chances of running afoul of RESPA, rather than develop systems to meet the ''qualified CLO'' criteria. More helpful, many participants argued, would be if HUD explained clearly how RESPA's anti-kickback prohibitions and disclosure requirements applied to various sorts of CLO payments.

After considering the public comments and informal meetings, HUD has decided: (1) To eliminate the exemption for borrower payments to CLOs and the associated disclosure; (2) to abandon the idea of establishing a similar or broader exemption for qualified CLOs; and (3) to issue this policy statement to help those developing and using CLOs to understand better how RESPA applies to their activities.

HUD does not think it is useful to continue a modest exemption or to develop a separate and elaborate regulatory structure for a still emerging industry. However, clarification of certain matters in the form of a policy statement would be useful to the industry and consumers. The effect of this action is to subject payments to CLOs to the same RESPA provisions as payments for any other service; however, HUD is providing specific guidance on how HUD will apply these provisions in the CLO context.

Today HUD is simultaneously issuing a revision to the 1992 rule. The preamble to this new final rule contains a fuller discussion of the decision-making process leading from the November 2, 1992 rule to the withdrawal of the exemption and the issuance of this guidance.

To the extent this guidance interprets rules that become effective 120 days from the date of this publication, then this guidance will be applicable as of the effective date of such rules.

Statement of Policy—1996–1

To give guidance to interested members of the public on the application of RESPA and its implementing regulations to these issues, the Secretary, pursuant to Section 19(a) of RESPA (12 U.S.C. 2617(a)) and 24 CFR 3500.4(a)(1)(ii), hereby issues the following statement of policy.

For purposes of this statement of policy, a CLO is a computer system that is used by or on behalf of a consumer to facilitate a consumer's choice among alternative products or settlement service providers in connection with a particular RESPA-covered real estate transaction. Such a computer system: (1) may provide information concerning products or services; (2) may pre-qualify a prospective borrower; (3) may provide consumers with an opportunity to select ancillary settlement services; (4) may provide prospective borrowers with information regarding the rates and terms of loan products for a particular property in order for the borrower to choose a loan product; (5) may collect and transmit information concerning the borrower, the property, and other information on a mortgage loan application for evaluation by a lender or lenders; (6) may provide loan origination, processing, and underwriting services, including but not limited to, the taking of loan applications, obtaining verifications and appraisals, and communicating with the borrower and lender; and (7) may make a funding decision.

This definition is not meant to be restrictive or exhaustive; it merely attempts to describe existing practices of service providers. With the use of technology evolving so rapidly, however, it is difficult for the Department to provide guidance on future unspecified practices in the abstract.

This statement of policy provides guidance on how RESPA applies to service providers and interprets existing law. It does not add any new restrictions on business practices.

Section 3 of RESPA defines ''settlement services'' to include:

> [A]ny service provided in connection with a real estate settlement including, but not limited to * * * the origination of a federally related mortgage loan (including, but not limited to, the taking of loan applications, loan processing, and the underwriting and funding of loans), and the handling of the processing, and closing or settlement. 12 U.S.C. 2602(3).

The regulations define a ''settlement service'' to mean ''any service provided in connection with a prospective or actual settlement.'' 24 CFR 3500.2. This definition specifically includes the providing of any services related to the origination, processing, or funding of a federally-related mortgage loan. 24 CFR 3500.2. To the extent that a CLO performs ''settlement services'', it is a settlement service provider. Conversely, if a CLO does not perform settlement services, it is not a settlement service provider.

NOTHING IN THIS POLICY STATEMENT SHOULD BE READ AS A HUD ENDORSEMENT OF ANY CHARGE TO CONSUMERS OR AS A REQUIREMENT FOR ANY CHARGE TO CONSUMERS.

1. Payments by Consumers to CLOs

CLOs that provide services to consumers may charge consumers for services performed. 12 U.S.C. 2607(c)(2). RESPA requires that all charges for settlement services be reported on the Good Faith Estimate and the HUD–1 or HUD–1A; however, the regulations do not address the exact timing of the payment. 12 U.S.C. 2603(a) and 2604(c). Similarly, any payment for CLO services that is paid outside of closing must be so identified on the HUD–1 or HUD–1A settlement statement. 24 CFR 3500, App. A, General Instructions. In addition, settlement service providers whose products are made available on CLOs may reimburse consumers for any fee charged them by the CLO.

2. Payments by Settlement Service Providers to CLOs

Section 8(a) of RESPA prohibits payments for the referral of a consumer to a settlement service provider; however, Section 8(c)(2) permits payments for goods or facilities actually furnished or for services actually performed. 12 U.S.C. 2607(c)(2).

The definition used in this policy statement encompasses various types of CLOs. Regardless of the type of CLO, compensable goods, facilities, or services must be provided by the CLO in return for payments by settlement service providers. Any such payment must bear a reasonable relationship to the value of the goods, facilities, or services provided. 24 CFR 3500.14(g)(2). A charge for which no or nominal services are performed or for which duplicative fees are charged is an unearned fee. 24 CFR 3500.14(c). For example, if a CLO lists only one settlement service provider and only presents basic information to the consumer on the provider's products, then there would appear to be no or nominal compensable services provided by the CLO to either the settlement service provider or the consumer, only a referral; and any payment by the settlement service provider for the CLO listing could be considered a referral fee in violation of section 8 of RESPA. Note, however, that a new provision of HUD's RESPA rules at 24 CFR 3500.14(g)(1)(ix), discussed at Section 4 below, allows employees who do not perform settlement services to market settlement services or products of an affiliated entity and to receive employer payments for these referrals. A company may not pay any other company for the

referral of settlement service business. 24 CFR 3500.14(b).

RESPA places no restrictions on the pricing structure of CLOs as long as the payments are not referral fees and are reasonably related to the value of the services provided. However, the value of a referral is not to be taken into account in determining whether the payment exceeds the reasonable value of the goods, facilities, or services. 24 CFR 3500.14(g)(2). If these requirements are met, CLOs may charge settlement service providers a fixed or periodic fee or a fee for each closed transaction arising from the use of the CLO. However, if a CLO charges different fees to different settlement service providers in similar situations, an incentive may exist for the CLO to steer the consumer to the settlement service provider paying the highest fees. HUD may scrutinize these circumstances to determine if the differentials constitute referral fees.[1]

Settlement service providers may pay CLOs a reasonable fee for services provided by the CLO to the settlement service provider, such as, having information about the provider's products made available to consumers for comparison with the products of other settlement service providers. If a CLO elects to act as a mortgage broker, as that term is defined in 24 CFR 3500.2, then all RESPA rules related to compensation of mortgage brokerage services apply to the CLO. On December 13, 1995, HUD convened a negotiated rulemaking that could result in changes to these RESPA rules. CLOs should review carefully any changes in the regulations applicable to mortgage brokers and others that result from this rulemaking.

3. CLOs in a Controlled Business Context

When a CLO is used in a controlled business arrangement, the RESPA regulations relating to controlled business arrangements apply. Section 3(7) of RESPA (12 U.S.C. 2602(7)) defines a controlled business arrangement in terms of an affiliate relationship or a direct or beneficial ownership. The regulations provide definitions of affiliate relationship, beneficial ownership, and direct ownership. 24 CFR 3500.15(c). Separate entities are a necessary component of the controlled business arrangement definitions. For example, if a real estate brokerage firm uses a CLO within its own business structure and there is no separate affiliated business entity involved, then the CLO is not being used in a controlled business arrangement with the real estate brokerage firm.

A controlled business arrangement does not violate RESPA if three conditions are met. 12 U.S.C. 2607(c)(4)(A)–(C). Section 3500.15(b) of the regulations elaborates on the three requirements. First, when consumers are referred from one business entity to an affiliated business entity, a written disclosure of the affiliate relationship must be provided. For example, if a real estate firm has an affiliate relationship with a company providing CLO services and an agent of the real estate firm refers a customer to the CLO company, then the real estate agent must provide the required disclosure to the customer at the time of the referral. Similarly, if the CLO company has an affiliate relationship with one of the settlement service providers listed on the CLO, then the CLO operator must provide the customer with the required disclosure before the consumer uses the CLO. Second there can be no required use, i.e., the referring entity cannot require the consumer to use the CLO and the CLO cannot require the consumer to use an affiliated company listed on the CLO. Thirdly, the only thing of value that is received by one business entity from other business entities in the controlled business arrangement, other than payments permitted under 24 CFR 3500.14(g) for services actually performed, is a return on an ownership interest or franchise relationship.

4. Payments of Commissions or Bonuses to Employees

CLOs are subject to the same RESPA provisions regarding employee compensation as any service provider. For example, a settlement service provider listed on the CLO may not pay a CLO employee a referral fee or commission if the consumer selects that settlement service provider. 24 CFR 3500.14(b). Employees of a CLO may receive a *bona fide* salary or compensation from the CLO—their employer. 24 CFR 3500.14(g)(1)(iv). Compensation from CLOs to their employees may include commissions for transactions closed on the system. 24 CFR 3500.14(g)(1)(vii). However, if a CLO pays commissions for transactions closed with some settlement service providers but not for transactions closed with other settlement service providers, HUD may scrutinize these payments to determine if the commissions constitute referral fees or are exempt under other provisions (see below).

HUD established two new exemptions related to compensation of employees in a final rule published today and effective 120 days from their publication. The first exemption (24 CFR 3500.14(g)(1)(viii)) allows an employer to pay managerial employees who do not routinely deal with the public bonuses related to the referral of settlement service business to a business entity in a controlled business arrangement. The CLO employee who routinely deals with customers is not considered a managerial employee within the meaning of 24 CFR 3500.2. A CLO may have managerial employees within the meaning of 24 CFR 3500.2, such as a district manager who oversees several CLO operators who work in different locations. Such a managerial employee may receive bonuses based on criteria related to the performance of a business entity in an affiliate relationship, such as profitability, capture rate, or other thresholds. However, the amount of such bonus may not be calculated as a multiple of the number or value of referrals of settlement services business to a business entity in a controlled business arrangement. 24 CFR 3500.14(g)(1)(viii).

The second exemption (24 CFR 3500.14(g)(1)(ix)) allows employer payments to their own bona fide employees for referrals of business to affiliated entities if the employee does not perform settlement services in any transaction and provides the consumer with a written disclosure in the format of the Controlled Business Arrangement Disclosure Statement. Employer payments to a CLO employee who does not perform settlement services may qualify for this exemption. This exemption permits employer payments to employees who do not perform settlement services for referrals to affiliates. Under this exemption, the employee may market a settlement service or product of an affiliated entity, including collecting and conveying information and taking an application or order for the services of an affiliated entity. Marketing also may include incidental communications with the consumer after the application or order, such as providing the consumer with information about the status of an application or order; marketing may not include serving as the ongoing point of contact for coordinating the delivery and provision of settlement services. Under the exemption, a CLO employee who takes an application and collects information for an affiliate but performs no other settlement services, may receive a payment from his or her

[1] Depending upon the circumstances of the referrals and the design of the CLO system, this steering of consumers may violate the Fair Housing Act, as may selective marketing of CLO systems.

employer for a referral to an affiliated entity.

5. Neutral Display of Information on Settlement Service Providers and Their Products

Section 8(a) of RESPA prohibits compensated referrals. HUD may scrutinize non-neutral displays of information on settlement service providers and their products because favoring one settlement service provider over others may be affirmatively influencing the selection of a settlement service provider which could constitute a referral under RESPA. 24 CFR 3500.14(f). An agreement or understanding for the referral of business incident to or part of a settlement service may be established by a practice, pattern, or course of conduct. 24 CFR 3500.14(e). For example, if one lender always appears at the top of any listing of mortgage products and there is no real difference in interest rates and charges between the products of that lender and other lenders on a particular listing, then this may be a non-neutral presentation of information which affirmatively influences the selection of a settlement service provider. Furthermore, if there is an affiliate relationship between the CLO and a favored settlement service provider, the non-neutral presentation of information under certain circumstances could constitute a required use in violation of 3500.15(b)(2). This guidance on neutral displays should not be read to discourage CLOs from assisting consumers in determining which products are most advantageous to them. For example, if a CLO consistently ranks lenders and their mortgage products on the basis of some factor relevant to the borrower's choice of product, such as APR calculated to include all charges and to account for the expected tenure of the buyer, HUD would consider this practice as a neutral display of information.

Authority: 12 U.S.C. 2617; 42 U.S.C. 3535(d).

Dated: May 31, 1996.

Nicolas P. Retsinas,

Assistant Secretary for Housing-Federal Housing Commissioner.

[FR Doc. 96–14330 Filed 6–6–96; 8:45 am]

BILLING CODE 4210–27–P

24 CFR Part 3500

[Docket No. FR–3638–N–04]

Office of the Assistant Secretary for Housing-Federal Housing Commissioner; Real Estate Settlement Procedures Act (RESPA); Statement of Policy 1996–2 Regarding Sham Controlled Business Arrangements

AGENCY: Office of the Assistant Secretary for Housing-Federal Housing Commissioner, HUD.

ACTION: Statement of policy 1996–2, sham controlled business arrangements.

SUMMARY: This statement sets forth the factors that the Department uses to determine whether a controlled business arrangement is a sham under the Real Estate Settlement Procedures Act (RESPA) or whether it constitutes a *bona fide* provider of settlement services. It provides an interpretation of the legislative and regulatory framework for HUD's enforcement practices involving sham arrangements that do not come within the definition of and exception for controlled business arrangements under Sections 3(7) and 8(c)(4) of the Real Estate Settlement Procedures Act (RESPA). It is published to give guidance and to inform interested members of the public of the Department's interpretation of this section of the law.

FOR FURTHER INFORMATION CONTACT: David Williamson, Director, Office of Consumer and Regulatory Affairs, Room 5241, telephone (202) 708–4560. For legal enforcement questions, Rebecca J. Holtz, Attorney, Room 9253, telephone: (202) 708–4184. (The telephone numbers are not toll-free.) For hearing- and speech-impaired persons, this number may be accessed via TTY (text telephone) by calling the Federal Information Relay Service at 1–800–877–8339. The address for the above-listed persons is: Department of Housing and Urban Development, 451 Seventh Street, SW, Washington, DC 20410.

SUPPLEMENTARY INFORMATION:

General Background

Section 8 (a) of the Real Estate Settlement Procedures Act (RESPA) prohibits any person from giving or accepting any fee, kickback, or thing of value for the referral of settlement service business involving a federally related mortgage loan. 12 U.S.C. § 2607(a). Congress specifically stated it intended to eliminate kickbacks and referral fees that tend to increase unnecessarily the costs of settlement services. 12 U.S.C. § 2601(b)(2).

After RESPA's passage, the Department received many questions asking if referrals between affiliated settlement service providers violated RESPA. Congress held hearings in 1981. In 1983, Congress amended RESPA to permit controlled business arrangements (CBAs) under certain conditions, while retaining the general prohibitions against the giving and taking of referral fees. Congress defined the term ''controlled business arrangement'' to mean an arrangement:

> [I]n which (A) a person who is in a position to refer business incident to or a part of a real estate settlement service involving a federally related mortgage loan, or an associate of such person, has either an affiliate relationship with or a direct or beneficial ownership interest of more than 1 percent in a *provider of settlement services;* and (B) either of such persons directly or indirectly refers such business to *that provider* or affirmatively influences the selection of *that provider.*

12 U.S.C. 2602(7) (emphasis added).

In November 1992, HUD issued its first regulation covering controlled business arrangements, 57 FR 49599 (Nov. 2, 1992), codified at 24 CFR 3500.15.[1] That rule provided that a controlled business arrangement was not a violation of Section 8 and allowed referrals of business to an affiliated settlement service provider so long as: (1) The consumer receives a written disclosure of the nature of the relationship and an estimate of the affiliate's charges; (2) the consumer is not required to use the controlled entity; and (3) the only thing of value received from the arrangement, other than payments for services rendered, is a return on ownership interest.

Section 3500.15(b) sets out the three conditions of the controlled business arrangement exception. The first condition concerns the disclosure of the relationship. The rule provides that the person making the referral must provide the consumer with a written statement, in the format set out in appendix D to part 3500. This statement must be provided on a separate piece of paper. The referring party must give the statement to the consumer no later than the time of the referral. 24 CFR 3500.15(b)(1).

The second condition involves the non-required use of the referred entity. Section 3500.15(b)(2) provides that the person making the referral may not require the consumer to use any particular settlement service provider, except in limited circumstances. A

[1] All citations in this Statement of Policy refer to recently streamlined regulations published on March 26, 1996 (61 FR 13232), in the Federal Register (to be codified at 24 CFR part 3500).

lender may require a consumer to pay for the services of an attorney, credit reporting agency or real estate appraiser to represent the lender's interest in the transaction. An attorney may use a title insurance agency that operates as an adjunct to the attorney's law practice as part of the attorney's representation of that client in a real estate transaction. 24 CFR 3500.15(b)(2).

The third condition relates to what is received from the relationship. The rule provides that the only thing of value that comes from the arrangement, other than permissible payments for services rendered, is a return on an ownership interest or franchise relationship. 24 CFR 3500.15(b)(3). The rule describes what are not proper returns on ownership interest at 24 CFR 3500.15(b)(3)(ii). These include ownership returns that vary by the amount of business referred to a settlement service provider, or situations where adjustments are made to an ownership share based on referrals made.

Both the statute and HUD's 1992 regulation make the controlled business arrangement exemption available in situations where referrals are made to a ''provider of settlement services.'' These provisions do not authorize compensation to shell entities or sham arrangements that are not a *bona fide* ''provider of settlement services.'' Since issuing the 1992 RESPA rule, HUD has received numerous complaints that some CBAs are being established to circumvent RESPA's prohibitions and are sham arrangements. The complaints often use the expression ''joint venture'' as a generic way to describe these new sham arrangements. While many joint ventures are *bona fide* providers of settlement services, permissible under the exemption, it does appear that some are not.

A joint venture is a special combination of two or more legal entities which agree to carry out a single business enterprise for profit, and for which purpose they combine their property, money, effects, skill and knowledge. Some of the alleged sham arrangements may be joint ventures; others, however, may involve different legal structures, such as limited partnerships, limited liability companies, wholly owned corporations, or combinations thereof. Regardless of form, the common feature of these arrangements is that at least two parties are involved in their creation: a referrer of settlement service business (such as a real estate broker or real estate agent) and a recipient of referrals of business (such as a mortgage banker, mortgage broker, title agent or title company). At least one, if not both, of these parties will have an ownership, partnership or participant's interest in the arrangement.

Many of the complaints about these arrangements allege that the new entity performs little, if any, real settlement services or is merely a subterfuge for passing referral fees back to the referring party. For example, in a letter to HUD dated September 30, 1994, the Mortgage Bankers Association of America (MBA) expressed growing concern about ''sham joint venture'' controlled business arrangements. The MBA stated:

> Under this scenario, a lender and a real estate broker jointly fund a new subsidiary that purports to be a mortgage broker but has no staff and minimal funding, does no work (out sources all process to the lender), receives all business by referral from the broker parent, sells all production to the lender parent, and pays profits to both parents in the form of dividends. We oppose such arrangements because they afford compensation to brokers but impose on them no work or business risk. In short, they are disguised referral fee arrangements.

The MBA encouraged HUD to define eligible joint venture entities. It suggested that such entities should have their own employees, perform substantive functions in the mortgage process and share in the risks and rewards of any viable enterprise in the marketplace.

Complaints also included arrangements that are wholly-owned by a referring entity. An example of such a complaint involved an arrangement promoted by a mortgage broker to real estate brokers to help them set up a wholly owned mortgage brokerage subsidiary. The mortgage broker claimed that the real estate broker ''can earn hundreds or even thousands of dollars each month without investing any money or changing [his or her] current business practices.'' The mortgage broker's pitch was that ''my current staff can work for my company and also for yours.'' The real estate broker's new company ''can use my investors, my office, my phones, my copy machines, my promotional material * * * Your company will have no overhead other than the taxes due on the income you generate and the bank fees for the money accounts your company must have. The entire annual expenses can be covered on the first loan your company closes * * * I can manage your company at the same time I manage mine so you won't have any time investment either.'' HUD's concern about this and similar complaints prompted the Department to issue this Statement of Policy.

In many of the arrangements that have come to HUD's attention, the substantial functions of the settlement service business that the new arrangement purports to provide are actually provided by a pre-existing entity that otherwise could have received referrals of business directly. In such arrangements the entity actually performing the settlement services reduces its profit margin and shares its profits with the referring participant in the arrangement. In some situations, such as in the last example, companies that could have received referrals of settlement service business directly (hereafter ''creators'') have assisted the referring parties in creating wholly owned subsidiaries at little or no cost to the referring party. These subsidiaries in turn refer or contract out most of the essential functions of its settlement service business back to a creator that helped set them up or use the creator to run the business.

The following illustrates the two general types of arrangements:

BILLING CODE 4210–27–P

Illustrations

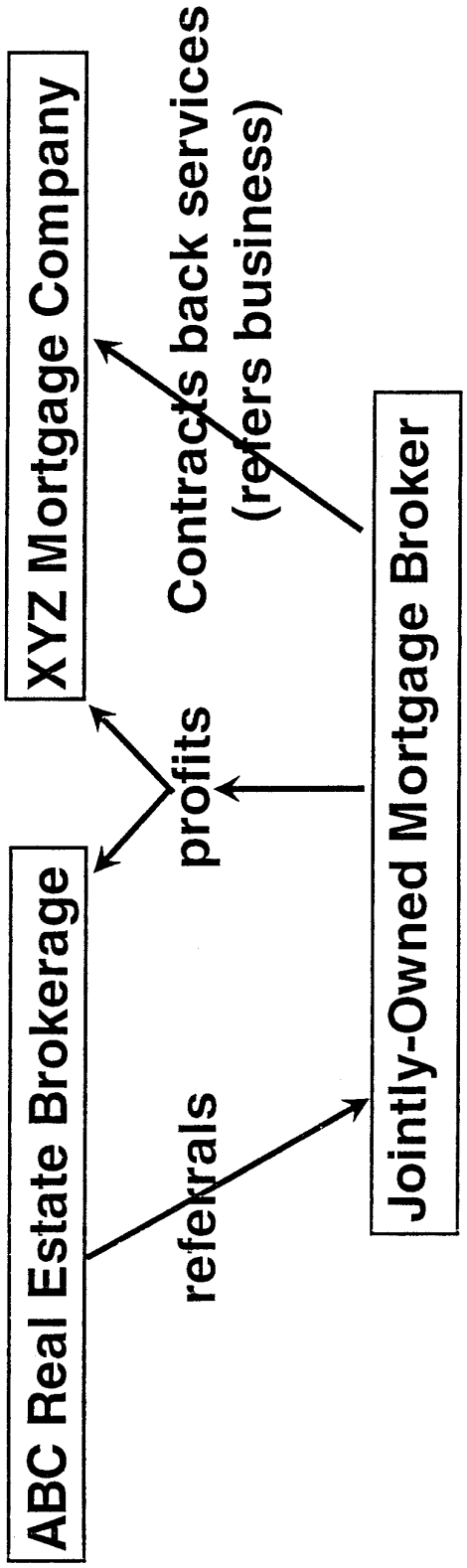

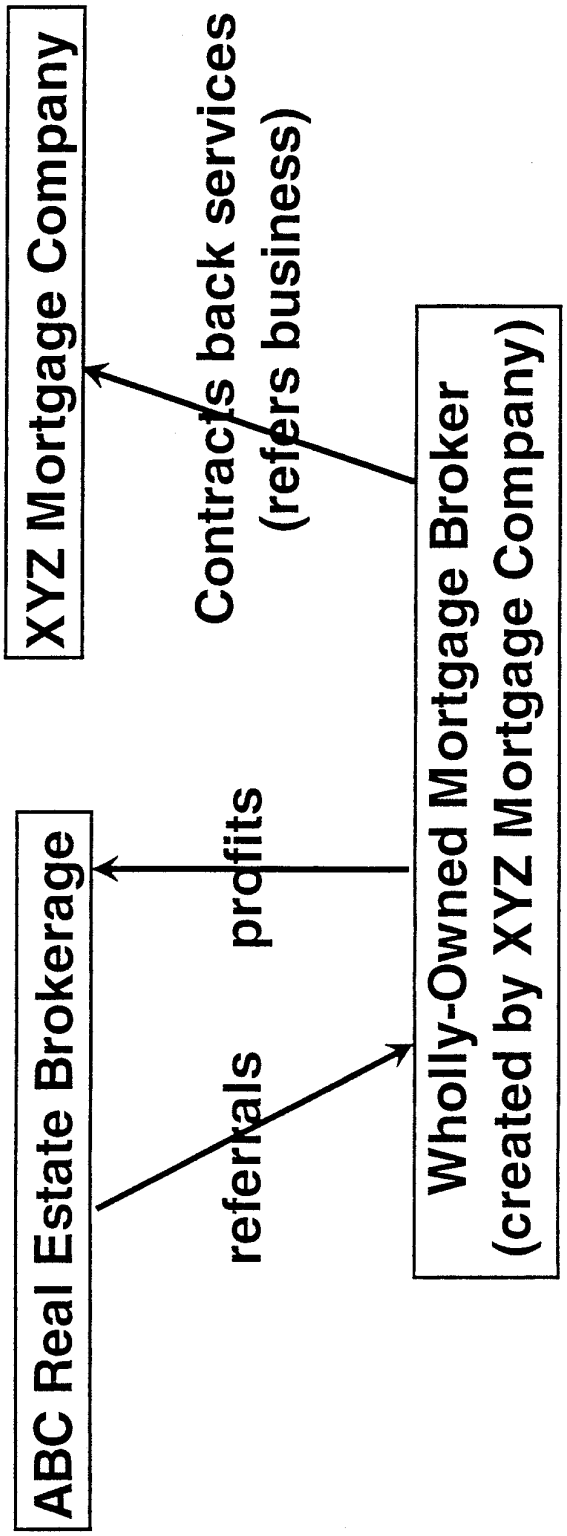

BILLING CODE 4210–27–C

There are numerous variations on these two general arrangements.

Regulatory and Legislative Framework

In amending RESPA to permit controlled businesses, Congress specifically stated that it did not intend to ''change current law which prohibits the payment of unearned fees, kickbacks, or other things of value in return for referrals of settlement service business.'' H.R. Rep. No. 123, 98th Cong., 1st Sess. at 76 (1983). The statute's definition of ''controlled business arrangement'' uses the term ''provider of settlement services'' to describe the entity receiving the referral of business. 12 U.S.C. 2602(7). The term ''provider of settlement services'' means a person that renders settlement services. The statute further defines ''settlement services'' to include any service provided in connection with a real estate settlement and includes a list of such services. If the controlled entity performs little or none of its settlement service function, it may not be ''providing'' settlement services, and therefore may not meet the statutory definition of a controlled business arrangement.

HUD's existing regulations address a shell controlled entity that contracts out *all* of its functions to another entity. See Appendix B to Part 3500, Illustration 10.[2] Where the shell controlled entity provides *no substantive services* for its portion of the fee, HUD deems the arrangement as violating Section 8(a) and (b) of RESPA because the controlled entity is merely passing unearned fees back to its owner for referring business to another provider. Besides this Illustration, however, HUD has not addressed arrangements that perform some, but not all of the settlement service functions it purports to provide.

RESPA's earliest legislative history shows that Congress tried to address whether a payment is for services actually performed or is a disguised referral fee. *See* H.R. Rep. No. 1177, 93d Cong., 2d Sess. 1974 (hereafter ''the Report''). The Report stated that RESPA's anti-kickback provisions were not intended to prohibit the payments for goods furnished or services actually rendered, ''so long as the payment bears a *reasonable relationship* to the value of the goods or services received by the person or company making the payment. To the extent the payment is in excess of the reasonable value of the goods provided or services performed, the excess may be considered a kickback or referral fee * * *. '' *Id.* at 7–8. The Report stated:

> Those persons and companies that provide settlement services should therefore take measures to ensure that any payments they make or commissions they give are not out of line with the reasonable value of the services received. The value of the referral itself (i.e., the additional business obtained thereby) is not to be taken into account in determining whether the payment is reasonable.

Id. at 8. The Report further explained that section 8(c) set forth the ''types of legitimate payments that would not be proscribed.'' As an example, the Report noted that commissions paid by a title insurance company to a duly appointed agent for services actually performed in the issuance of a policy of title insurance would be permitted. The Report explained:

> Such agents * * * typically *perform substantial services* for and on behalf of a title insurance company. These services may include a title search, an evaluation of the title search to determine the insurability of the title (title examination), the actual issuance of the policy on behalf of the title insurance company, and the maintenance of records relating to the policy and policy-holder. In essence, *the agent does all of the work that a branch office of the title insurance company would otherwise have to perform.*

Id. at 8 (emphasis added). Thus, the Report shows that Congress anticipated that reasonable payments could be paid to entities that perform ''all of the work'' normally associated with the settlement service being provided.

The legislative history for the controlled business arrangement provides guidance for cases in which a new entity does not perform ''all of the work'' that would otherwise need to be performed by a fully functioning service provider. The testimony of officials of existing affiliated companies at Congressional hearings in 1981 provided an analysis of companies that do little substantive work. *Real Estate Settlement Procedures Act—Controlled Business: Hearings Before the Subcomm. on Housing and Community Development of the House Comm. on Banking, Finance and Urban Affairs,* 97th Cong., 1st Sess. 24, (1981) (hereafter ''Hearings''). Charles R. Hilton, then Senior Vice President, Coldwell, Banker & Co. stated: ''In our line of operation, all of our ancillary services are operated as a full line service company. We do our title searches; we do the examinations; we share in the risk; we take all of the risk, in some cases.'' Hearings at 423. Stanley Gordon, then Vice President and General Counsel for the residential group of Coldwell, Banker & Co., acknowledged that some title agencies may have been formed to circumvent Section 8 of RESPA. He said:

> The most common examples of circumvention are those agencies which provide little or no service to their customers. They do not perform a search of the title records, and have few of the other characteristics of an ongoing business, such as a staff of employees and related operating expenses. Such agencies, in our opinion, come within the prohibition of Section 8.
>
> * * * * *
>
> There must be, for a violation of Section 8, the involvement of a third party, such as a title insurance underwriter of a title agency, that has agreed to make a kickback to the broker. This arrangement is best established by the absence of reasonable compensation from the underwriter to the title agency for the services actually rendered by the title agency. The kickback is the payment by the title insurer to the title agency (which is then passed through to the broker owner) where there is no service being rendered which reasonably corresponds to the payment * * *.

Hearings at 429–431.

Consequently, in cases where work is contracted out to another entity (be it an independent third party, a creator, an owner, or a participant in a joint venture), HUD has looked at whether the contracting party receives payments from the new entity at less than the reasonable value of the services rendered. If so, then the difference between the payments made to the contracting party and the reasonable value of the services rendered may be seen as a disguised referral fee in violation of Section 8. 24 CFR 3500.14(g)(2).

Statement of Policy—1996–2

To give guidance to interested members of the public on the application of RESPA and its implementing regulations to these issues, the Secretary, pursuant to Section 19(a) of RESPA and 24 CFR 3500.4(a)(1)(ii), hereby issues the following Statement of Policy.

Congress did not intend for the controlled business arrangement (''CBA'') amendment to be used to

[2] Illustration 10. *Facts:* A is a real estate broker who refers business to its affiliate title company B. A makes all required written disclosures to the homebuyer of the arrangement and estimated charges and the homebuyer is not required to use B. B refers or contracts out business to C who does all the title work and splits the fee with B. B passes its fee to A in the form of dividends, a return on ownership interest.

Comments: The relationship between A and B is a controlled business arrangement. However, the controlled business arrangement exemption does not provide exemption between a controlled entity, B, and a third party, C. Here, B is a mere ''shell'' and provides no substantive services for its portion of the fee. The arrangement between B and C would be in violation of Section 8(a) and (b). Even if B had an affiliate relationship with C, the required exemption criteria have not been met and the relationship would be subject to Section 8.

promote referral fee payments through sham arrangements or shell entities. H.R. Rep. 123, 98th Cong., 1st Sess. 76 (1983). The CBA definition addresses associations between *providers* of settlement services. 12 U.S.C. 2602(7). In order to come within the CBA exception, the entity receiving the referrals of settlement service business must be a ''provider'' of settlement service business. If the entity is not a *bona fide* provider of settlement services, then the arrangement does not meet the definition of a CBA. If an arrangement does not meet the definition of a CBA, it cannot qualify for the CBA exception, even if the three conditions of Section 8(c) are otherwise met. 12 U.S.C. 2607(c)(4)(A–C). Therefore, subsequent compliance with the CBA conditions concerning disclosure, non-required use and payments from the arrangement that are a return on ownership interest, will not exempt payments that flow through an entity that is not a provider of settlement services.

Thus, in RESPA enforcement cases involving a controlled business arrangement created by two existing settlement service providers, HUD considers whether the entity receiving referrals of business (regardless of legal structure) is a *bona fide* provider of settlement services. When assessing whether such an entity is a *bona fide* provider of settlement services or is merely a sham arrangement used as a conduit for referral fee payments, HUD balances a number of factors in determining whether a violation exists and whether an enforcement action under Section 8 is appropriate. Responses to the questions below will be considered together in determining whether the entity is a *bona fide* settlement service provider. A response to any one question by itself may not be determinative of a sham controlled business arrangement. The Department will consider the following factors and will weigh them in light of the specific facts in determining whether an entity is a *bona fide* provider:

(1) Does the new entity have sufficient initial capital and net worth, typical in the industry, to conduct the settlement service business for which it was created? Or is it undercapitalized to do the work it purports to provide?

(2) Is the new entity staffed with its own employees to perform the services it provides? Or does the new entity have ''loaned'' employees of one of the parent providers?

(3) Does the new entity manage its own business affairs? Or is an entity that helped create the new entity running the new entity for the parent provider making the referrals?

(4) Does the new entity have an office for business which is separate from one of the parent providers? If the new entity is located at the same business address as one of the parent providers, does the new entity pay a general market value rent for the facilities actually furnished?

(5) Is the new entity providing substantial services, *i.e.*, the essential functions of the real estate settlement service, for which the entity receives a fee? Does it incur the risks and receive the rewards of any comparable enterprise operating in the market place?

(6) Does the new entity perform all of the substantial services itself? Or does it contract out part of the work? If so, how much of the work is contracted out?

(7) If the new entity contracts out some of its essential functions, does it contract services from an independent third party? Or are the services contracted from a parent, affiliated provider or an entity that helped create the controlled entity? If the new entity contracts out work to a parent, affiliated provider or an entity that helped create it, does the new entity provide any functions that are of value to the settlement process?

(8) If the new entity contracts out work to another party, is the party performing any contracted services receiving a payment for services or facilities provided that bears a reasonable relationship to the value of the services or goods received? Or is the contractor providing services or goods at a charge such that the new entity is receiving a ''thing of value'' for referring settlement service business to the party performing the service?

(9) Is the new entity actively competing in the market place for business? Does the new entity receive or attempt to obtain business from settlement service providers other than one of the settlement service providers that created the new entity?

(10) Is the new entity sending business exclusively to one of the settlement service providers that created it (such as the title application for a title policy to a title insurance underwriter or a loan package to a lender)? Or does the new entity send business to a number of entities, which may include one of the providers that created it?

Even if an entity is a *bona fide* provider of settlement services, that finding does not end the inquiry. Questions may still exist as to whether the entity complies with the three conditions of the controlled business arrangement exception. 12 U.S.C. § 2607(c)(4)(A–C). Issues may arise concerning whether the consumer received a written disclosure concerning the nature of the relationship and an estimate of the controlled entity's charges at the time of the referral. 12 U.S.C. § 2607(c)(4)(A); 24 CFR 3500.15(b)(1). Other issues may arise concerning whether the referring party is requiring the consumer to use the controlled entity. 12 U.S.C. § 2607(c)(4)(B); 24 CFR 3500.15(b)(2).

Still another area that may arise concerns the third condition of the CBA exception, whether the only thing of value that comes from the arrangement, other than permissible payments for services rendered, is a return on ownership interest or franchise relationship. 12 U.S.C. § 2607(c)(4)(C); 24 CFR 3500.15(b)(3). Section 3500.15(b)(3)(ii) of the regulations provides that a return on ownership interest does not include payments that vary by the amount of actual, estimated or anticipated referrals or payments based on ownership shares that have been adjusted on the basis of previous referrals. When assessing whether a payment is a return on ownership interest or a payment for referrals of settlement service business, HUD will consider the following questions:

(1) Has each owner or participant in the new entity made an investment of its own capital, as compared to a ''loan'' from an entity that receives the benefits of referrals?

(2) Have the owners or participants of the new entity received an ownership or participant's interest based on a fair value contribution? Or is it based on the expected referrals to be provided by the referring owner or participant to a particular cell or division within the entity?

(3) Are the dividends, partnership distributions, or other payments made in proportion to the ownership interest (proportional to the investment in the entity as a whole)? Or does the payment vary to reflect the amount of business referred to the new entity or a unit of the new entity?

(4) Are the ownership interests in the new entity free from tie-ins to referrals of business? Or have there been any adjustments to the ownership interests in the new entity based on the amount of business referred? Responses to these questions may be determinative of whether an entity meets the conditions of the CBA exception. If an entity does not meet the conditions of the CBA exception, then any payments given or accepted in the arrangement may be subject to further analysis under Section 8(a) and (b). 12 U.S.C. § 2607(a) and (b).

Some examples of how HUD will use these factors in an analysis of specific circumstances are provided below.

Examples:

1. An existing real estate broker and an existing title insurance company form a joint venture title agency. Each participant in the joint venture contributes $1000 towards the creation of the joint venture title agency, which will be an exclusive agent for the title insurance company. The title insurance company enters a service agreement with the joint venture to provide title search, examination and title commitment preparation work at a charge lower than its cost. It also provides the management for the joint venture. The joint venture is located in the title insurance company's office space. One employee of the title insurance company is ''leased'' to the joint venture to handle closings and prepare policies. That employee continues to do the same work she did for the title insurance company. The real estate broker participant is the joint venture's sole source of business referrals. Profits of the joint venture are divided equally between the real estate broker and title insurance company.

HUD Analysis. After reviewing all of the factors, HUD would consider this an example of an entity which is not a *bona fide* provider of settlement service business. As such, the payments flowing through the arrangement are not exempt under Section 8(c)(4) and would be subject to further analysis under Section 8. In looking at the amount of capitalization used to create the settlement service business, it appears that the entity is undercapitalized to perform the work of a full service title agency. In this example, although there is an equal contribution of capital, the title insurance company is providing much of the title insurance work, office space and management oversight for the venture to operate. Although the venture has an employee, the employee is leased from and continues to be supervised by the title insurance company. This new entity receives all the referrals of business from the real estate broker participant and does not compete for business in the market place. The venture provides a few of the essential functions of a title agent, but it contracts many of the core title agent functions to the title insurance company. In addition, the title insurance company provides the search, examination and title commitment work at less than its cost, so it may be seen as providing a ''thing of value'' to the referring title agent, which is passed on to the real estate broker participant in a return on ownership.

2. A title insurance company solicits a real estate broker to create a company wholly owned by the broker to act as its title agent. The title insurance company sets up the new company for the real estate broker. It also manages the new company, which is staffed by its former employees that continue to do their former work. As in the previous example, the new company also contracts back certain of the core title agent services from the title insurance company that created it, including the examination and determination of insurability of title, and preparation of the title insurance commitment. The title insurance company charges the new company less that its costs for these services. The new company's employees conduct the closings and issue only policies of title insurance on behalf of the title insurance company that created it.

HUD Analysis. As was the case in the first example, HUD would not consider the new entity to be a *bona fide* settlement service provider. The legal structure of the new entity is irrelevant. The new company does little real work and contracts back a substantial part of the core work to the title insurance company that set it up. Further, the employees of the new company continue to do the work they previously did for the title insurance company which also continues to manage the employees. The new entity is not competing for business in the market place. All of the referrals of business to the new entity come from the real estate broker owner. The creating title insurance company provides the bulk of the title work. On balance HUD would consider these factors and find that the new entity is not a *bona fide* title agent, and the payments flowing through the arrangement are not exempt under Section 8(c)(4) and would be subject to further analysis under Section 8.

3. A lender and a real estate broker form a joint venture mortgage broker. The real estate broker participant in the joint venture does not require its prospective home buyers to use the new entity and it provides the required CBA disclosures at the time of the referral. The real estate broker participant is the sole source of the joint venture's business. The lender and real estate broker each contributes an equal amount of capital towards the joint venture, which represents a sufficient initial capital investment and which is typical in the industry. The new entity, using its own employees, prepares loan applications and performs all other functions of a mortgage broker. On a few occasions, to accommodate surges in business, the new entity contracts out some of the loan processing work to third party providers, including the lender participant in the joint venture. In these cases, the new entity pays all third party providers a similar fee, which is reasonably related to the processing work performed. The new entity manages its own business affairs. It rents space in the real estate participant's office at the general market rate. The new entity submits loan applications to numerous lenders and only a small percent goes to the lender participant in the joint venture.

HUD Analysis. After reviewing all of the factors, HUD would consider this an example of an entity which is a *bona fide* provider of settlement service business rather than a sham arrangement. The new entity would appear to have sufficient capital to perform the services of a mortgage broker. The participant's interests appear to be based on a fair value contribution and free from tie-ins to referrals of business. The new entity has its own staff and manages its own business. While it shares a business address with the real estate broker participant, it pays a fair market rent for that space. It provides substantial mortgage brokerage services. Even though the joint venture may contract out some processing overflow to its lender participant, this work does not represent a substantial portion of the mortgage brokerage services provided by the joint venture. Moreover, the joint venture pays all third party providers a similar fee for similar processing services.

While the real estate broker participant is the sole source of referrals to the venture, the venture only sends a small percent of its loan business to the lender participant. The joint venture mortgage broker is thus actively referring loan business to lenders other than its lender participant. Since the real estate broker provides the CBA disclosure and does not require the use of the mortgage broker and the only return to the participants is based on the profits of the venture and not reflective of referrals made to the venture, it meets the CBA exemption requirements. HUD would consider this a *bona fide* controlled business arrangement.

4. A real estate brokerage company decides that it wishes to expand its operations into the title insurance business. Based on a fair value contribution, it purchases from a title insurance company a 50 percent ownership interest in an existing full service title agency that does business in its area. The title agency is liable for the core title services it provides, which includes conducting the title searches, evaluating the title search to determine the insurability of title, clearing underwriting objections, preparing title commitments, conducting the closing, and issuing the title policy. The agent is an exclusive title agent for its title insurance company owner. Under the new ownership, the real estate brokerage company does not require its prospective home buyers to use its title agency. The brokerage has its real estate agents provide the required CBA disclosures when the home buyer is referred to the affiliated title insurance agency. The real estate brokerage company is not the sole source of the title agency's business. The real estate brokerage company receives a return on ownership in proportion to its 50%

ownership interest and unrelated to referrals of business.

HUD Analysis. A review of the factors reflects an arrangement involving a *bona fide* provider of settlement services. In this example, the real estate brokerage company is not the sole source of referrals to the title agency. However, the title agency continues its exclusive agency arrangement with the title insurance company owner. While this last factor initially may raise a question as to why other title insurance companies are not used for title insurance policies, upon review there appears to be nothing impermissible about these referrals of title business from the title agency to the title insurance company.

This example involves the purchase of stock in an existing full service provider. In such a situation, HUD would carefully examine the investment made by the real estate brokerage company. In this example, the real estate brokerage company pays a fair value contribution for its ownership share and receives a return on its investment that is not based on referrals of business. Since the real estate brokerage provides the CBA disclosure, does not require the use of the title agency and the only return to the brokerage is based on the profits of the agency and not reflective of referrals made, the arrangement meets the CBA exemption requirements. HUD would consider this a *bona fide* controlled business arrangement.

5. A mortgage banker sets up a limited liability mortgage brokerage company. The mortgage banker sells shares in divisions of the limited liability company to real estate brokers and real estate agents. For $500 each, the real estate brokers and agents may purchase separate ''divisions'' within the limited liability mortgage brokerage company to which they refer customers for loans. In later years ownership may vary by the amount of referrals made by a real estate broker or agent in the previous year. Under this structure, the ownership distributions are based on the business each real estate broker or real estate agent refers to his/her division and not on the basis of their capital contribution to the entity as a whole. The limited liability mortgage brokerage company provides all the substantial services of a mortgage broker. It does not contract out any processing to its mortgage banker owner. It sends loan packages to its mortgage banker owner as well as other lenders.

HUD analysis. Although HUD would consider the mortgage brokerage company to be a *bona fide* provider of mortgage brokerage services, this example illustrates an arrangement that fails to meet the third condition of the CBA exception. 12 U.S.C. 2607(c)(4)(C). Here, the capitalization, ownership and payment structure with ownership in separate ''divisions'' is a method in which ownership returns or ownership shares vary based on referrals made and not on the amount contributed to the capitalization of the company. In cases where the percent of ownership interest or the amount of payment varies by the amount of business the real estate agent or broker refers, such payments are not *bona fide* returns on ownership interest, but instead, are an indirect method of paying a kickback based on the amount of business referred. 24 CFR 3500.15(b)(3).

Authority: 12 U.S.C. 2617; 42 U.S.C. 3535(d).

Dated: May 31, 1996.

Nicolas P. Retsinas,

Assistant Secretary for Housing-Federal Housing Commissioner.

[FR Doc. 96–14331 Filed 6–6–96; 8:45 am]

BILLING CODE 4210–27–P

---

24 CFR Part 3500

[Docket No. FR–3638–N–05]

Office of the Assistant Secretary for Housing-Federal Housing Commissioner; Real Estate Settlement Procedures Act (RESPA); Statement of Policy 1996–3, Rental of Office Space, Lock-outs, and Retaliation

AGENCY: Office of the Assistant Secretary for Housing-Federal Housing Commissioner, HUD.

ACTION: Statement of Policy 1996–3, Rental of Office Space, Lock-outs, and Retaliation.

SUMMARY: This statement sets forth the Department's interpretation of Section 8 of the Real Estate Settlement Procedures Act (RESPA) and its implementing regulations with regard to the rental of office space, lock-outs and retaliation. It is published to give guidance and to inform interested members of the public of the Department's position on enforcement of this section of the law.

FOR FURTHER INFORMATION CONTACT: David R. Williamson, Director of the Office of Consumer and Regulatory Affairs, Room 5241, telephone: (202) 708–4560. For legal enforcement questions, Peter Race, Assistant General Counsel for Program Compliance, or Rebecca J. Holtz, Attorney, Room 9253, telephone: (202) 708–4184. (The telephone numbers are not toll-free.) For hearing- and speech-impaired persons, this number may be accessed via TTY (text telephone) by calling the Federal Information Relay Service at 1–800–877–8339. The address for the above-listed persons is: Department of Housing and Urban Development, 451 Seventh Street, SW, Washington, DC 20410.

SUPPLEMENTARY INFORMATION:

General Background

Section 8 (a) of the Real Estate Settlement Procedures Act (RESPA) prohibits any person from giving or accepting any fee, kickback, or thing of value for the referral of settlement service business involving a federally related mortgage loan. 12 U.S.C. 2607(a). Congress specifically stated it intended to eliminate kickbacks and referral fees that tend to increase unnecessarily the costs of settlement services. 12 U.S.C. 2601(b)(2).

Since July 1993, the Department has been seeking comments and advice concerning the final rule of November 2, 1992, implementing Section 8 of RESPA. On July 21, 1994, the Department published a new proposed rule on certain Section 8 issues. Simultaneously with the issuance of this Statement of Policy, HUD is publishing a final rule in that rulemaking. As part of that rulemaking process, the Department received comments concerning the application of Section 8 of RESPA to the rental of office space, lock-outs and retaliation in connection with real estate brokerage office practices. In addition, the Department's enforcement officials have received numerous complaints dealing with these same issues.

Rental of Office Space

In the last few years, the Department has received numerous complaints alleging that certain settlement service providers, particularly lenders, are leasing desks or office space in real estate brokerage offices at higher than market rate in exchange for referrals of business. In HUD's rulemaking docket, number R–94–1725 (FR–3638), many commenters argued that HUD should scrutinize this rental practice. The concern expressed is that real estate brokers charge, and settlement service providers pay, high rent payments for the desk or office space to disguise kickbacks to the real estate broker for the referral of business to the settlement service provider. In this Statement of Policy, the Department sets forth how it distinguishes legitimate payments for rentals from payments that are for the referral of business in violation of Section 8.

Lock-outs

The Department also received comments and complaints alleging that settlement service providers were being excluded from, or locked-out of, places of business where they might find

potential customers. The most common occurrence cited was where a real estate brokerage company had leased space to a particular provider of services, and had prevented any other provider from entering its office space.

As part of the July 21, 1994, rulemaking, a Nebraska lender commented:

> We are experiencing a rapid growth of lender lock-out relationships wherein real estate companies lease office space within their sales offices to a particular mortgage company. A part of the agreement is that other lenders are not allowed in the sales offices to solicit business. This clearly prevents free competition in financing to the home buyer.
>
> * * * * *
>
> * * * [I]t is very clear that the [real estate] office managers are exerting a lot of control to keep all other lenders out. This would not be done without proper incentive ($$$) * * *.

Several other commenters alleged that real estate office space arrangements with particular lenders, coupled with limiting or denying rival lenders access to customers, were being used in their communities to eliminate competition. These commenters called for special RESPA rules to ban these practices.

Retaliation

The Department also has received complaints concerning retaliation practices used to influence consumer referrals. In one complaint, financial service representatives in a real estate broker's office were given specific quotas of referrals of home buyers to an affiliated lender and were threatened with the loss of their jobs if they did not meet the quotas.

Commenters on the proposed rules also alleged that some employers were engaging in practices of retaliation or discrimination against employees and agents who did not refer business to affiliated entities. Reprisals could range from loss of benefits, such as fewer sales leads, higher desk fees, less desirable work space, and ultimately, loss of job. Some commenters requested that the Department issue guidelines or other regulatory provisions to restrict such retaliatory activities.

The Coalition to Retain Independent Services in Settlement (CRISIS) called for a rule prohibiting retaliation against employees and agents who refer business to non-affiliated entities as most consistent with the language of the RESPA statute. CRISIS suggested strong language to prohibit negative actions against employees and agents who refer business to non-affiliated entities, including prohibitions against more subtle actions, such as loss of work space or increases in desk fees.

Statement of Policy—1996–3

To give guidance to interested members of the public on the application of RESPA and its implementing regulations to these issues, the Secretary, pursuant to Section 19(a) of RESPA and 24 CFR 3500.4(a)(1)(ii),[1] hereby issues the following Statement of Policy.

Rental of Office Space

Section 8 of RESPA prohibits a person from giving or from accepting any fee, kickback or thing of value pursuant to an agreement that business incident to a settlement service involving a federally related mortgage loan shall be referred to any person. 12 U.S.C. § 2607(a). An example of a thing of value is a rental payment that is higher than that ordinarily paid for the facilities. The statute, however, permits payments for goods or facilities actually furnished or for services actually performed. 12 U.S.C. § 2607(c)(2). Thus, when faced with a complaint that a settlement service provider is paying a high rent for referrals of settlement service business, HUD analyzes whether the rental payment is bona fide or is really a disguised referral fee.

HUD's regulations implement the statutory provisions at 24 CFR 3500.14 and give greater guidance to this analysis. Section 3500.14(g)(2) of the regulations provides that the Department may investigate high prices to see if they are the result of a referral fee or a split of a fee. It states: ''If the payment bears no reasonable relationship to the market value of the goods or services provided, then the excess is not for services or goods actually performed or provided * * *. The value of a referral (i.e., the value of any additional business obtained thereby) is not to be taken into account in determining whether the payment exceeds the reasonable value of such goods, facilities or services.'' *Id.*

Thus, under existing regulations, when faced with a complaint that a person is renting space from a person who is referring business to that person, HUD examines the facts to determine whether the rental payment bears a reasonable relationship to the market value of the rental space provided or is a disguised referral fee. The market value of the rental space may include an appropriate proportion of the cost for office services actually provided to the tenant, such as secretarial services, utilities, telephone and other office equipment. In some situations, a market price rental payment from the highest bidding settlement service provider could reflect payments for referrals of business to that settlement service provider from the person whose space is being rented. Thus, to distinguish between rental payments that may include a payment for referrals of settlement service business and a payment for the facility actually provided, HUD interprets the existing regulations to require a ''general market value'' standard as the basis for the analysis, rather than a market rate among settlement service providers.

In a rental situation, the general market value is the rent that a non-settlement service provider would pay for the same amount of space and services in the same or a comparable building. A general market value standard allows payments for facilities and services actually furnished, but does not take into account any value for the referrals that might be reflected in the rental payment. A general market standard is not only consistent with the existing regulations, it furthers the statute's purpose. Congress specifically stated that it intended to protect consumers from unnecessarily high settlement charges caused by abusive practices. 12 U.S.C. § 2601. Some settlement service providers might be willing to pay a higher rent than the general market value to reflect the value of referrals of settlement service business. The cost of an above-general-market-rate rental payment could likely be passed on to the consumer in higher settlement costs. If referrals of settlement service business are taking place in a given rental situation, and the rental payment is above the general market value, then it becomes difficult to distinguish any increase in rental payment over the general market from a referral fee payment.

HUD, therefore, interprets Section 8 of RESPA and its implementing regulations to allow payments for the rental of desk space or office space. However, if a settlement service provider rents space from a person who is referring settlement service business to the provider, then HUD will examine whether the rental payments are reasonably related to the general market value of the facilities and services actually furnished. If the rental payments exceed the general market value of the space provided, then HUD will consider the excess amount to be for the referral of business in violation of Section 8(a).

[1] All citations in this Statement of Policy refer to recently streamlined regulations published on March 26, 1996 (61 FR 13232), in the Federal Register (to be codified at 24 CFR part 3500).

As an additional consideration, HUD will examine whether the rent is calculated, in whole or in part, on a multiple of the number or value of the referrals made. If the rental payment is conditioned on the number or value of the referrals made, then HUD will consider the rental payment to be for the referral of business in violation of Section 8(a).

In its RESPA enforcement work, HUD has also encountered ''bogus'' rental arrangements that are really agreements for the payment of referral fees. For example, one case involved a title insurance company that paid a ''rental fee'' to a real estate broker for the ''per use rental'' of a conference room for closings. The title insurance company paid a $100 fee for each transaction. This ''rental fee'' was greater than the general market value for the use of the space. In addition, the facts revealed that the room was rarely actually used for closings. In this case, HUD examined whether a ''facility'' was actually furnished at a general market rate. HUD concluded that this was a sham rental arrangement; the ''rent'' was really a disguised referral fee in violation of Section 8(a).

Lock-outs

A lock-out situation arises where a settlement service provider prevents other providers from marketing their services within a setting under that provider's control. A situation involving a rental of desk or office space to a particular settlement service provider could lead to other, competing, settlement service providers being ''locked-out'' from access to the referrers of business or from reaching the consumer. The existence of a lock-out situation could, therefore, give rise to a question of whether a rental payment is *bona fide.* A lock out situation without other factors, however, does not give rise to a RESPA violation.

The RESPA statute does not provide HUD with authority to regulate access to the offices of settlement service providers or to require a company to assist another company in its marketing activity. This interpretation of RESPA does not bear on whether State consumer, antitrust or other laws apply to lock-out situations. Of course, Section 8 still applies to any payments made to a referrer of business by a settlement service provider who is not ''locked out'' of the referrer's office and receives referrals of settlement service business from that office.

Retaliation

Section 8 of RESPA expressly prohibits giving positive incentives, ''things of value,'' for the referral of settlement service business. 12 U.S.C. 2607(a). The Act is silent as to disincentives. If HUD were to find that Section 8 also prohibited disincentives for failure to make referrals, HUD would find itself being called upon to resolve numerous employment disputes under RESPA. HUD does not believe that Congress intended that RESPA reach these matters. Retaliatory actions against employees are more appropriately governed by State labor, contract, and other laws. However, the Department will continue to examine for possible violations of Section 8 whether payments or other positive incentives are given employees or agents to make referrals to other settlement service providers.

New RESPA regulations are being issued simultaneously with this Statement of Policy. With regard to this area, the public should note the new exemptions for payments to employees in 24 CFR 3500.14.

Authority: 12 U.S.C. 2617; 42 U.S.C. 3535(d).

Dated: May 31, 1996.

Nicolas P. Retsinas,

Assistant Secretary for Housing-Federal Housing Commissioner.

[FR Doc. 96–14332 Filed 6–6–96; 8:45 am]

BILLING CODE 4210–27–P

Reader Aids

Federal Register

Vol. 61, No. 111

Friday, June 7, 1996

CUSTOMER SERVICE AND INFORMATION

Federal Register/Code of Federal Regulations

General Information, indexes and other finding aids	**202–523–5227**
Public inspection announcement line	**523–5215**

Laws

Public Laws Update Services (numbers, dates, etc.)	**523–6641**
For additional information	**523–5227**

Presidential Documents

Executive orders and proclamations	**523–5227**
The United States Government Manual	**523–5227**

Other Services

Electronic and on-line services (voice)	**523–4534**
Privacy Act Compilation	**523–3187**
TDD for the hearing impaired	**523–5229**

ELECTRONIC BULLETIN BOARD

Free Electronic Bulletin Board service for Public Law numbers, Federal Register finding aids, and list of documents on public inspection. **202–275–0920**

FAX-ON-DEMAND

You may access our Fax-On-Demand service. You only need a fax machine and there is no charge for the service except for long distance telephone charges the user may incur. The list of documents on public inspection and the daily Federal Register's table of contents are available using this service. The document numbers are 7050-Public Inspection list and 7051-Table of Contents list. The public inspection list will be updated immediately for documents filed on an emergency basis.

NOTE: YOU WILL ONLY GET A LISTING OF DOCUMENTS ON FILE AND NOT THE ACTUAL DOCUMENT. Documents on public inspection may be viewed and copied in our office located at 800 North Capitol Street, N.W., Suite 700. The Fax-On-Demand telephone number is: **301–713–6905**

FEDERAL REGISTER PAGES AND DATES, JUNE

27767–27994 3
27995–28466 4
28467–28722 5
28723–29000 6
29001–29266 7

CFR PARTS AFFECTED DURING JUNE

At the end of each month, the Office of the Federal Register publishes separately a List of CFR Sections Affected (LSA), which lists parts and sections affected by documents published since the revision date of each title.

3 CFR

Proclamations:
6902 28465
Executive Orders:
12880 28721
13008 28721
Administrative Orders:
Presidential Determinations:
96–27 of May 28, 1996 29001
Memorandums:
No. 96–26 of May 22, 1996 27767

5 CFR

532 ..... 27995, 27996
Proposed Rules:
2429 28797
2470 28797
2471 28798
2472 28798
2473 28798

7 CFR

6 28723
29 27997
610 27998
928 28000
1230 28002
Proposed Rules:
457 27512

8 CFR

103 28003
299 28003

9 CFR

Proposed Rules:
92 ..... 27797, 28073

10 CFR

51 28467
71 28723
1703 28725
Proposed Rules:
430 28517

12 CFR

336 28725
747 28021
Proposed Rules:
229 27802
704 28085
709 28085
741 28085

14 CFR

25 28684
33 28430
39 ..... 28028, 28029, 28031, 28497, 28498, 28730, 28732, 28734, 28736, 28738, 29003, 29007, 29009
71 ..... 28033, 28034, 28035, 28036, 28037, 28038, 28039, 28040, 28041, 28042, 28043, 28044, 28045, 28740, 28741, 28742, 28743
91 28416
95 27769
97 ..... 29015, 29016
121 28416
125 28416
135 28416
399 29018
Proposed Rules:
Ch. I 28803
39 ..... 28112, 28114, 28518, 28520, 29038
71 28803
121 29000
250 27818

15 CFR

Proposed Rules:
946 28804

16 CFR

Proposed Rules:
419 29039

17 CFR

Proposed Rules:
1 28806

19 CFR

10 28932
12 ..... 28500, 28932
102 28932
134 28932
178 28500
Proposed Rules:
19 28808
113 28808
132 28522
144 28808
151 28522
351 28821
353 28821
355 28821

20 CFR

404 28046

21 CFR

14 ..... 28047, 28048
70 28525
73 28525
74 28525
80 28525
81 28525
82 28525
100 27771
101 ..... 27771, 28525

103 27771
104 27771
105 27771
109 27771
137 27771
161 27771
163 27771
172 27771
177 28049
178 ....28051, 28525
182 27771
186 27771
197 27771
201 28525
700 27771
701 28525
Proposed Rules:
1 28116
2 28116
3 28116
5 28116
10 28116
12 28116
20 28116
56 28116
58 28116

23 CFR

1206 28745
1215 28747
1230 28750
Proposed Rules:
655 29234

24 CFR

3500 ....59238, 29255, 29258, 29264
Proposed Rules:
35 29170
36 29170
37 29170

25 CFR

65 27780
66 27780
76 27780
Proposed Rules:
1 27821
150 27822
166 27824
175 29040
217 27831
271 27833
272 27833
274 27833
277 27833
278 27833
290 29044

26 CFR

40 28053
48 28053
Proposed Rules:
1 ....27833, 27834, 28118, 28821, 28823
31 28823
35a 28823
301 28823
502 28823
503 28823
509 28823
513 28823
514 28823
516 28823
517 28823
520 28823
521 28823

29 CFR

1952 28053
Proposed Rules:
1904 27850
1915 28824
1952 27850

30 CFR

Proposed Rules:
218 28829
250 28525
256 28528

33 CFR

62 27780
100 ....27782, 28501, 28502, 28503, 29019
165 ....28055, 29020, 29021, 29022

34 CFR

Proposed Rules:
701 27990

36 CFR

6 28504
7 ....28505, 28751
17 28506
Proposed Rules:
7 28530

37 CFR

Proposed Rules:
202 28829

38 CFR

1 ....29023, 29024
2 27783
6 29024
7 29025
8a 29027
14 27783
20 29027
21 ....28753, 28755, 29028
36 28057

39 CFR

233 28059

40 CFR

15 28755
32 28755
52 28061
55 28757
63 27785
73 28761
80 763
264 28508
265 28508
270 28508
271 28508
300 ....27788, 28511
Proposed Rules:
52 ....28531, 28541
73 ....28830, 28996
81 28541
180 ....28118, 28120

43 CFR

2120 29030
4100 29030
4600 29030
Proposed Rules:
6000 28546
6100 28546
6200 28546
6300 28546
6400 28546
6500 28546
6600 28546
7100 28546
7200 28546
7300–9000 28546

44 CFR

64 28067

46 CFR

108 28260
110 28260
111 28260
112 28260
113 28260
161 28260

47 CFR

73 28766
74 28766
76 28698
95 28768
Proposed Rules:
0 28122
80 28122

48 CFR

Proposed Rules:
45 27851
52 27851

49 CFR

107 27948
171 28666
172 28666
173 28666
174 28666
178 28666
179 28666
190 27789
191 27789
192 ....27789, 28770
193 27789
541 29031
565 29031
567 29031
571 ....28423, 29031
1039 29036
Proposed Rules:
6 28831
391 28547
571 ....28123, 28124, 28550, 28560

50 CFR

216 27793
247 27793
620 27795
663 ....28786, 28796
672 ....28069, 28070
675 ....27796, 28071, 28072
Proposed Rules:
17 ....28834, 29047
625 27851
650 27862
651 ....27862, 27948

REMINDERS

The rules and proposed rules in this list were editorially compiled as an aid to Federal Register users. Inclusion or exclusion from this list has no legal significance.

RULES GOING INTO EFFECT TODAY

AGRICULTURE DEPARTMENT

Agricultural Marketing Service

Melons grown in Texas; published 5-8-96

COMMERCE DEPARTMENT

National Oceanic and Atmospheric Administration

Fishery conservation and management:

Atlantic mackerel, squid, and butterfish; published 5-20-96

DEFENSE DEPARTMENT

Vocational rehabilitation and education:

Veterans education--

Post-Vietnam era veterans educational assistance; miscellaneous amendments; published 6-7-96

ENVIRONMENTAL PROTECTION AGENCY

Air quality implementation plans; approval and promulgation; various States:

Idaho; published 5-8-96

Texas; published 5-8-96

Water pollution control:

Clean Water Act--

State permitting programs; State law challenge requirement; approval or denial of Section 402 permits; published 5-8-96

FEDERAL COMMUNICATIONS COMMISSION

Radio stations; table of assignments:

Mississippi et al.; published 4-29-96

Texas et al.; published 4-29-96

Washington; published 4-29-96

GENERAL SERVICES ADMINISTRATION

Federal travel:

Privately owned vehicle mileage reimbursement; published 5-23-96

PERSONNEL MANAGEMENT OFFICE

Prevailing rate systems; published 5-8-96

TRANSPORTATION DEPARTMENT

Coast Guard

Ports and waterways safety:

Miami Beach, FL; security zone; published 6-7-96

TRANSPORTATION DEPARTMENT

Rulemaking proceedings; policy statement; published 6-7-96

TRANSPORTATION DEPARTMENT

Federal Aviation Administration

Airworthiness directives:

Aviat Aircraft, Inc.; published 5-16-96

Brackett Aircraft Co., Inc.; published 4-29-96

I.A.M. Rinaldo Piaggo S.p.A.; published 5-3-96

Robinson Helicopter Co.; published 5-3-96

VETERANS AFFAIRS DEPARTMENT

Adjudication; pensions, compensation, dependency, etc.:

Soldiers' and sailors' civil relief; published 6-7-96

Veterans mortgage life insurance; published 6-7-96

Freedom of Information Act and Privacy Act:

Information law; technical amendments; published 6-7-96

Investigation regulations; technical amendments; published 6-7-96

Life Insurance, United States Government:

Federal regulatory review; published 6-7-96

Practice and procedure:

Board of Veteran's Appeals; elimination of unnecessary provisions; published 6-7-96

Vocational rehabilitation and education:

Veterans education--

Post-Vietnam era veterans educational assistance; miscellaneous amendments; published 6-7-96

COMMENTS DUE NEXT WEEK

AGRICULTURE DEPARTMENT

Agricultural Marketing Service

Specialty crops; import regulations:

Medjhool dates grown in California; comments due by 6-10-96; published 4-9-96

AGRICULTURE DEPARTMENT

Forest Service

Alaska Federal public lands subsistence management regulations

Waters subject to subsistence priority regulation; identification; Federal Subsistence Program and Federal Subsistence Board's Authority; expansion; comments due by 6-14-96; published 4-4-96

COMMERCE DEPARTMENT

National Oceanic and Atmospheric Administration

Endangered and threatened species:

Sea turtle conservation; shrimp trawling requirements--

Soft turtle excluder devices approval removed, etc.; comments due by 6-10-96; published 4-24-96

Fishery conservation and management:

Gulf of Alaska and Bering Sea and Aleutian Islands groundfish; comments due by 6-10-96; published 4-15-96

Gulf of Alaska groundfish; comments due by 6-14-96; published 6-4-96

Limited access management of Federal fisheries in and off of Alaska

Gulf of Alaska and Bering Sea and Aleutian Islands groundfish; comments due by 6-13-96; published 5-15-96

Ocean salmon off coasts of Washington, Oregon, and California; comments due by 6-10-96; published 5-24-96

DEFENSE DEPARTMENT

Acquisition regulations:

Government property; use and charges clause class deviation; comments due by 6-14-96; published 5-15-96

ENVIRONMENTAL PROTECTION AGENCY

Air pollutants, hazardous; national emission standards:

Equivalent emission limitations by permit; implementation; comments due by 6-10-96; published 5-10-96

Air quality implementation plans; approval and promulgation; various States:

Illinois; comments due by 6-10-96; published 5-10-96

Ohio; comments due by 6-14-96; published 5-15-96

Wisconsin; comments due by 6-10-96; published 5-10-96

Air quality planning purposes; designation of areas:

Arizona; comments due by 6-10-96; published 5-10-96

Hazardous waste:

Land disposal restrictions--

Wood preserving wastes and toxicity characteristic metal wastes; comments due by 6-10-96; published 5-10-96

Superfund program:

National oil and hazardous substances contingency plan--

National priorities list update; comments due by 6-12-96; published 5-13-96

National priorities list update; comments due by 6-12-96; published 5-13-96

FEDERAL COMMUNICATIONS COMMISSION

Freedom of Information Act; implementation; comments due by 6-14-96; published 4-15-96

Radio stations; table of assignments:

Illinois; comments due by 6-10-96; published 4-26-96

Kansas; comments due by 6-13-96; published 4-29-96

Missouri; comments due by 6-10-96; published 4-26-96

New Mexico; comments due by 6-10-96; published 4-26-96

Ohio; comments due by 6-13-96; published 4-29-96

Pennsylvania; comments due by 6-10-96; published 4-26-96

Wisconsin; comments due by 6-10-96; published 4-26-96

Telecommunications Act of 1996; implementation:

Customer proprietary network information, etc.; telecommunications carriers' use; comments due by 6-11-96; published 5-28-96

HEALTH AND HUMAN SERVICES DEPARTMENT

Food and Drug Administration

Animal drugs, feeds, and related products:

Protein derived from ruminants prohibited in ruminant feed; comments due by 6-13-96; published 5-14-96

Food for human consumption:

Food labeling--

Nutrient content claims; dietary supplements, nutrition and ingredient labeling; comment periods extension; comments due by 6-10-96; published 4-15-96

Human drugs:

Orally ingested (OTC) drug products containing alcohol as inactive ingredient; maximum concentration limit; comments due by 6-10-96; published 5-10-96

Medical devices:

Analyte specific regents; classification/ reclassification as restricted devices; comments due by 6-12-96; published 3-14-96

INTERIOR DEPARTMENT

Fish and Wildlife Service

Alaska Federal public lands subsistence management regulations

Waters subject to subsistence priority regulation; identification; Federal Subsistence Program and Federal Subsistence Board's Authority; expansion; comments due by 6-14-96; published 4-4-96

INTERIOR DEPARTMENT

Minerals Management Service

Outer Continental Shelf; oil, gas, and sulphur operations:

Tracts offered for sale; high bids, acceptance or rejection; time period extension; comments due by 6-14-96; published 5-15-96

JUSTICE DEPARTMENT

Justice Programs Office

Grants:

Violence against women; arrest policies; comments due by 6-13-96; published 5-14-96

LABOR DEPARTMENT

Wage and Hour Division

Migrant and seasonal agricultural worker protection:

Employ, independent contractor and joint employment, definitions; comments due by 6-12-96; published 3-29-96

NUCLEAR REGULATORY COMMISSION

Production and utilization facilities; domestic licensing:

Reporting reliability and availability information for risk-significant systems and equipment; comments due by 6-11-96; published 2-12-96

PERSONNEL MANAGEMENT OFFICE

Employment:

Federal employee training; comments due by 6-12-96; published 5-13-96

RAILROAD RETIREMENT BOARD

Railroad Unemployment Insurance Act:

Representative payment; comments due by 6-10-96; published 4-11-96

TRANSPORTATION DEPARTMENT

Coast Guard

Regattas and marine parades:

Newport-Bermuda Regatta; comments due by 6-12-96; published 5-13-96

Searsport Lobster Boat Races; comments due by 6-12-96; published 5-13-96

TRANSPORTATION DEPARTMENT

Federal Aviation Administration

Airworthiness directives:

Aerospatiale; comments due by 6-12-96; published 4-9-96

Airbus; comments due by 6-10-96; published 4-29-96

Bell; comments due by 6-10-96; published 4-10-96

Boeing; comments due by 6-10-96; published 3-11-96

CFM International; comments due by 6-14-96; published 4-15-96

Jetstream; comments due by 6-10-96; published 4-29-96

McCauley; comments due by 6-11-96; published 4-12-96

McDonnell Douglas; comments due by 6-10-96; published 4-10-96

Class E airspace; comments due by 6-14-96; published 5-2-96

TRANSPORTATION DEPARTMENT

National Highway Traffic Safety Administration

Motor vehicle safety standards:

Accelerator control systems; comments due by 6-14-96; published 4-30-96

Lamps, reflective devices, and associated equipment--

Headlamp concealment devices; Federal regulatory review; comments due by 6-10-96; published 4-11-96

TRANSPORTATION DEPARTMENT

Surface Transportation Board

Carrier rates and service terms:

Rail common carriage; disclosure, publication, and notice of change of rates and other service terms; comments due by 6-10-96; published 5-9-96

TREASURY DEPARTMENT

Internal Revenue Service

Excise taxes:

Gasoline and diesel fuel dye injection systems; comments due by 6-12-96; published 3-14-96